JEFFERSON
COUNTY COLORADO

Board of County Commissioners Meeting
AGENDA

June 10, 2025, 9:00 a.m.
Hybrid BCC Hearing - Hearing Room 1 and WebEx Webinars
100 Jefferson County Parkway, Golden, CO 80419

To attend the Public Meeting please attend in person or visit the County's web site at **www.jeffco.us/meetings** to attend virtually and click on the link for the BCC Meeting you desire to attend which will take you to the WebEx Webinar platform. Please register and click on the blue "Join by Browser" option to join the meeting. The following website also provides access to the meeting:
https://jeffco.webex.com/jeffco/j.php?MTID=m125f5777a58f7d8d94ad38eed5517fa5
Webinar password: 5FxKf58XxbS
Alternatively, people can also call in and listen to the meeting by dialing: +1-408-418-9388:
Access Code/Webinar Number:
2485 690 7546
People who dial in will not be able to provide public comment during the meeting.

AGENDA

The Tuesday meeting of the Board of County Commissioners (the "Board") is an open meeting in which the Board approves contracts, expends funds, hears testimony, makes decisions on land use cases and takes care of other county matters. The public is welcome to attend.
The Board meeting has three parts: Public Comment, the Business Meeting and the Public Hearing.

General Procedures

Agenda items will normally be considered in the order they appear on this agenda. However, the Board may alter the agenda, take breaks during the meeting, work through the noon hour; and even continue an item to a future meeting date.

The Board welcomes your comments. During the Public Comment time, members of the public have three minutes to present views on county matters that are not included on the Hearing Agenda. Public Comment time is not for questions and answers; it is your time to express your views, people will not be allowed to utilize county resources to make visual presentations during public comment. The Board will take up to 15 minutes at the beginning of the meeting and if needed, additional public comment will be taken at the end of the meeting on items not listed on the Hearing Agenda.

To participate in Public Comment please attend in person or please log into the WebEx Events virtual meeting using a computer. Once logged into the meeting on your computer, please send a chat message to the host with your name, address, and the topic of your comment so that the Chair can recognize you at the appropriate time for public comment.

Please note that you are always welcome to communicate with the Board on the county's web site (www.jeffco.us), by e-mail (commish@jeffco.us), by phone (303-271-8525), fax (303-271-8941) or US mail (100 Jefferson County Parkway, Golden, CO 80419). You can also meet your Commissioners at numerous community events such as town hall meetings, homeowner associations and chamber meetings.

Pages

1. **Call to Order**
2. **Pledge of Allegiance**
3. **Pride Month Proclamation**
4. **Public Comment**
   Please see public comment instructions above
5. **Business Meeting**
   CONSENT AGENDA PROCEDURES - Items on the Business Meeting Consent Agenda generally are decided by The Board without further discussion at the meeting. However, any Board member may remove an item from the Business Meeting Consent Agenda for a presentation by staff and questions from the Board. The Board is not required to take public comment on business meeting items but may request additional information and input.
6. **Approval of Minutes Dated May 20, 2025** 6
7. **Consent Agenda**
   Other Contracts and Resolutions for which Notice was not possible may be considered.
   - 7.1 **Resolution CC25-138** 11
     Expenditure Approval Listings dated June 5, 2025
   - 7.2 **Resolution CC25-139** 12
     Ratification of Expenditure Approval Listed dated May 22, 2025
   - 7.3 **Resolution CC25-140** 13
     Ratification of Expenditure Approval Listed dated May 29, 2025
   - 7.4 **Resolution CC25-141** 14
     Abatement Refund of Property Taxes
   - 7.5 **Resolution CC25-142** 16
     Abatement Refund of Property Taxes

7.6 **Resolution CC25-143** 18
Deputy Sheriff Trainee Retirement Change

7.7 **Resolution CC25-144** 20
Amendments to Part 5 Staff Policies, Chapter 1 Rules, Section 3 Regarding the Driving on County Business Policy - County Manager

7.8 **Resolution CC25-145** 29
Amendments to Policy Part 5, Chapter 1, Section 9 Regarding the Remote Work Policy- Human Resources

7.9 **Resolution CC25-146** 36
Community Corrections Supplemental, State of Colorado and Intervention Supplemental of $150,000, Operations

7.10 **Resolution CC25-147** 37
Amendments to Policy Part 2, Chapter 1, Section 2 Regarding Contract and Delegation Authority and Policy Manual Part 4, Chapter 6, Section 1 Regarding Purchasing Policy- Board of County Commissioners and Grants and Procurement Division

7.11 **Resolution CC25-148** 57
Contract Amendment – Van Bibber Trail Project Phase 2 Construction Services (Not-to-Exceed $8,412,446) – Open Space

7.12 **Resolution CC25-150** 59
Contract for Safety Action Plan Development Consulting Services– Consor North America, Inc.–Transportation & Engineering (Not to Exceed $680,748.00) (Funding & Award Safe Streets for All)

7.13 **Resolution CC25-151** 61
New Commercial Hangar Ground Lease – Kryptonite Industries, Inc. - Airport

7.14 **Resolution CC25-152** 63
3227 Chase Street Affordable Housing - Seniors Resource Center - County Manager

8. **Regular Agenda - No Agenda Items**

9. **Public Hearing**

There are two parts to the Public Hearing Agenda: The Hearing Consent Agenda and the Regular Hearing Agenda.

Items are listed on the Hearing Consent Agenda because no testimony is expected. In the event a Commissioner or any member of the public wishes to testify regarding an item on the Consent Agenda, the item will be removed and considered with the Regular Hearing Agenda.

To offer public testimony on any of the cases on the Public Hearing Agenda, please attend in person or please log into the WebEx Events virtual meeting using a computer. Once logged into the meeting on your computer, please send a chat message to the host with your name, address, and the agenda item for which you wish to provide testimony so that the Chair can recognize you at the appropriate time for public testimony. Individuals will receive three minutes and HOA's located with the notice area for the Hearing item will be granted ten minutes.

Unless otherwise stated by the Chair, a motion to approve the Hearing Consent Agenda shall include and be subject to staff's findings, recommendations, and conditions as listed in the applicable Staff Report.

The public is entitled to testify on items under the Public Hearing Regular Agenda. Information on participation in hearings is provided in the County's brochure, "Y*our Guide to Board of County Commissioners Hearings*." It may be obtained on the rack outside the hearing room or from the County Public Affairs Office at 303-271-8512.

10. **Hearing Consent Agenda**

10.1 Resolution CC25-153 68
South Golden Road / Mt. Vernon Mixed-use ODP Amendment

10.2 Resolution CC25-154
Aspen Park SDA Church

10.3 Resolution CC25-155 405
Vernon Gardens Second Filing, Exemption Survey No. 2 Adjustment #1

11. **Hearing Regular Agenda**

11.1 Resolution CC25-156 485
Regulation Amendments pertaining to Transportation & Access Standards

12. **Public Comment**

Please see public comment instructions above.

13. **Reports**

14. Adjournment

Jefferson County does not discriminate on the basis of race, color, national origin, sex, religion, age, disability or sexual orientation in the provision of services. Disabled persons requiring reasonable accommodation to attend or participate in a County service, program or activity should call 303-271-5000 or TDD 303-271-8560. We appreciate a minimum of 24 hours advance notice so arrangements can be made to provide the requested auxiliary aid.

JEFFERSON
COUNTY COLORADO

Board of County Commissioners' Hearing Minutes

May 20, 2025, 9:00 a.m.
Hybrid BCC Hearing - Hearing Room 1 and WebEx Webinars
100 Jefferson County Parkway, Golden, CO 80419

BCC Present:	Commissioner Andy Kerr Commissioner Rachel Zenzinger Commissioner Lesley Dahlkemper, Chair
Staff Present:	Joe Kerby, County Manager Kym Sorrells, County Attorney Cassie Pearce, Public Affairs Director Katie LaLiberte, Deputy Clerk to the Board Karina Madrigal Bedolla, Deputy Clerk to the Board Mikhaila Zamora, Deputy Clerk to the Board

---

1. Call to Order

Commissioner Dahlkemper called the meeting to order.

2. Pledge of Allegiance

The Pledge of Allegiance was recited.

3. Sustainability Awards

The Commissioners presented Sustainability Awards for those selected by the Sustainability Commission. Those recognized include: Claire Naumer (Future Leader Award), New Moon Refillery (Sustainable Business Award), Betty Harris (Volunteer of the Year Award), and Julia Fliss (Educator of the Year). The

Commissioners invited everyone to visit the Sustainability Commission's website for more details on award winners and all of the work of the Commission.

4. Public Comment

Mike Rawluk

5. Business Meeting

6. Approval of Minutes Dated May 13, 2025

Motioned by Commissioner Kerr
Seconded by Commissioner Zenzinger

The Board unanimously approved the minutes dated May 13, 2025.

7. Consent Agenda

Motioned by Commissioner Kerr
Seconded by Commissioner Zenzinger

The Board unanimously approved the following Resolutions:

7.1 Resolution CC25-129

Expenditure Approval Listings dated May 15, 2025

7.2 Resolution CC25-130

Expenditure Preapproval May 22, 2025

7.3 Resolution CC25-131

Expenditure Preapproval May 29, 2025

7.4 Resolution CC25-132

Abatement Refund of Property Taxes

7.5 Resolution CC25-133

Intergovernmental Agreement with City and County of Broomfield for Water/Sewer Infrastructure Related to Taxiway K

7.6 Resolution CC25-134

Grant of non-exclusive easement to Qwest Corporation Doing Business As (DBA) CenturyLink Qwest Communication (QC) for a portion of County property containing future Taxiway K

7.7 Resolution No: CC25-135

Grant of Non-Exclusive Easements to Xcel Energy for portions of County property to allow electrical and gas facility adjustments

7.8 Resolution CC25-136

Traffic Impact Fee Reimbursement Agreement with HD Quincy, LLC

7.9 Resolution CC25-137

2025 Budget – May Supplementary Budget and Appropriation

8. Regular Agenda - No Agenda Items

9. Public Hearing

10. Hearing Consent Agenda - No Agenda Items

No Agenda Items

11. Hearing Regular Agenda - No Agenda Items

12. Public Comment

13. Reports

Commissioner Zenzinger: Commissioner Zenzinger had the opportunity to participate in a Civics Gallery Walk at Jefferson Junior/Senior High School. This event featured projects created by students and teachers addressing significant community issues they hope to solve. She congratulated both the students and teachers for their outstanding work. Commissioner Zenzinger also attended a meeting of the Jefferson Parkway Highway Authority but had no updates to report. Commissioner Zenzinger expressed excitement about attending the opening of Deer Creek Canyon Park and acknowledged the extensive efforts made to prevent property loss during a recent fire, reporting zero structural loss and no injuries. She praised the incredible collaboration between the County and the Sheriff's Office in effectively responding to the fire. Additionally, Commissioner Zenzinger participated in two conferences, where she served as both a speaker and a panelist. On Thursday, she spoke at a Special District Conference, which focused on the role of metro districts. On Friday, she joined a panel hosted by the Colorado Cooperation Organization, where the topic was local control versus state control in land use policy. Commissioner Zenzinger mentioned Governor Polis and his administration's stance on housing laws, including the threat of penalties for noncompliance. She noted that some groups are suing the Governor over a recent executive order. Commissioner Zenzinger commended these groups for defending local control and urged the state legislature to prioritize collaboration over

preemption and expressed concerns that infrastructure funding alone is not sufficient to address affordability challenges. Commissioner Zenzinger also shared that there will be a newsflash posted on the County's homepage about sustainability initiatives.

Commissioner Kerr: Commissioner Kerr: Commissioner Kerr was pleased to attend the Red Rocks Community College graduation on Saturday, where he saw several elected officials, including Mayors and City Council Members. He thanked the Rotary Club of Golden for hosting the 20th Annual Business Ethics Awards, which he attended along with more than 200 people, At this event, former Congressman Ed Perlmutter spoke about the role of ethics in politics both in Washington, D.C., and here in Colorado and highlighted the Rotary's 4-Way Test, which asks 'Is it the truth? Is it fair to all concerned? Will it build goodwill and better friendships? Will it be beneficial to all concerned?' Commissioner Kerr also participated in a tour with the Mile High Flood District, which included stops in Douglas County, Littleton, and Jefferson County. The tour showcased efforts by local governments and Homeowners' Associations to ensure proper stormwater management and flood control. Commissioner Kerr mentioned the work of the Jefferson County Sustainability Commission and welcomed Mike Nelson, who spoke about energy systems and the natural energy grid, a project he is deeply passionate about. Mr. Nelson is also the author of a short book titled The Smallest Book on Climate Change. Commissioner Kerr reminded everyone especially County employees about the upcoming Diversity, Equity, and Inclusion (DEI) program happening this week. He also reminded everyone that County offices will be closed on Monday for the Memorial Day holiday.

Commissioner Dahlkemper: Commissioner Dahlkemper gave a special shout out to Human Services Director Mary Berg, recognizing her and her team for their outstanding work. Last week, Commissioner Dahlkemper had the opportunity to participate in the Northern Colorado Collaborative, which focuses on wildfire resiliency. Commissioner Dahlkemper gave a shout out to Jeffco Open Space for their presentation on wildfire mitigation during the meeting. She also expressed excitement about the reopening of Deer Creek Canyon Park. The announcement was made official last week in partnership with the Sheriff's Office, Jeffco Open Space, and the Conifer Fire Protection District. Commissioner Dahlkemper encouraged the public to save the date for a community meeting on the 2025 Wildfire Mitigation Project, hosted by the Conifer Fire District. The meeting will take place on June 3rd at 6:30 p.m. at West Jefferson Middle School. Commissioner Dahlkemper thanked everyone who attended the recent Jefferson County Board of Commissioners Town Hall. Commissioner Dahlkemper also extended appreciation to the Public Affairs team as well as Dan Conway, Joe Kerby, Brian

Keating, and Mary Berg. Finally, Commissioner Dahlkemper mentioned another save the date for National Trails Day at Elk Meadow Park on Saturday, June 7th, from 9:00 a.m. to 1:30 p.m.

County Manager: County Manager Joe Kerby reminded everyone that the Rocky Mountain Metropolitan Airport will be hosting an Open House Town Hall from 10:00am-11:00am and from 5:00pm-6:00pm on Thursday, May 22nd.These events will follow an open walk-in format, allowing attendees to visit various stations focused on airport operations, planning, and development. County Manager Kerby encouraged all community members to attend. County Manager Kerby also announced that there will be no Board of County Commissioners Hearing or Staff Briefing on Tuesday, May 27th.

County Attorney: County Attorney Kym Sorrells gave a big shout out to all the recent high school and college graduates, including her daughter Kaitlin and Commissioner Kerr's son Braden, both of whom graduated from college within the past two weeks. County Attorney Sorrells extended congratulations to all of this year's graduates and their families on this important milestone.

14. Adjournment

There being no further business to come before the Board, the meeting was adjourned.

These minutes summarize the final decision made by the Board at the referenced meeting. This meeting was also audio recorded and that recording is available for review. In the event there is confusion as to what the final decision of the Board is, the Board will rely on the audio tape to interpret the Board's intent. The audio tape shall act as an official record of these proceedings for any necessary purpose when, in the opinion of the Board, the minutes are in any way insufficient. An audio copy of the Board of County Commissioners' proceedings is available by contacting the Deputy Clerk to the Board.

Chair

Deputy Clerk

M E M O R A N D U M

TO: Honorable Chair and Members of the Board of County Commissioners

FROM: Joe Kerby, County Manager

RE: Expenditure Approval Listings

DATE: June 10, 2025

Staff Recommendation:

Resolved that the Board of County Commissioners (BCC) hereby approves settlement of accounts listed on the Expenditure Approval Listings dated June 5, 2025.

Resolution No: CC25-138

Background:

Jefferson County has established a system of controls to reasonably assure that the claims to be examined and settled by the Board of County Commissioners on the Expenditure Approval Listings are allowable.

Further, the staff has reviewed all claims and has reasonable assurance that all claims are allowable and are in order to be paid.

Original returned to:

Dan Conway, Chief Financial Officer, x-8507

Distribution:

Jerry DiTullio, County Treasurer

M E M O R A N D U M

TO: Honorable Chairman and Members of the Board of County Commissioners

FROM: Joe Kerby, County Manager

RE: Ratification of Expenditure Approval Listing dated May 22, 2025

DATE: June 10, 2025

Staff Recommendation:

Resolved that the Board of County Commissioners (BCC) hereby approves settlement of accounts listed on the Expenditure Approval Listings dated May 22, 2025, that were prepared by the Finance Division and reviewed and approved by the County Manager or their designee.

Resolution No: CC25-139

Background:

Jefferson County has established a system of controls to reasonably assure that the claims to be examined and settled by the BCC on the Expenditure Approval Listings are allowable.

Further, the staff has reviewed all claims and has reasonable assurance that all claims are allowable and are in order to be paid.

Originator:

Dan Conway, Chief Financial Officer, x-8507

Distribution:

Jerry DiTullio, Treasurer

M E M O R A N D U M

TO: Honorable Chairman and Members of the Board of County Commissioners

FROM: Joe Kerby, County Manager

RE: Ratification of Expenditure Approval Listing dated May 29, 2025

DATE: June 10, 2025

Staff Recommendation:

Resolved that the Board of County Commissioners (BCC) hereby approves settlement of accounts listed on the Expenditure Approval Listings dated May 29, 2025, that were prepared by the Finance Division and reviewed and approved by the County Manager or their designee.

Resolution No: CC25-140

Background:

Jefferson County has established a system of controls to reasonably assure that the claims to be examined and settled by the BCC on the Expenditure Approval Listings are allowable.

Further, the staff has reviewed all claims and has reasonable assurance that all claims are allowable and are in order to be paid.

Originator:

Dan Conway, Chief Financial Officer, x-8507

Distribution:

Jerry DiTullio, Treasurer

Agenda Item 7.4

M E M O R A N D U M

TO: Honorable Chair and Members of the Board of County Commissioners

FROM: Kimberly S. Sorrells, County Attorney

RE: Abatement Refund of Property Taxes

Date: 6/10/2025

Staff Recommendation:
Whereas, the Board of County Commissioners (Board) hereby approves the findings and recommendations of the Jefferson County Assessor denoted in the corresponding abatement resolutions and adopts those findings and recommendations as its final action on these abatement petitions.

CASE NO.	PETITIONER	TAXES ABATED REFUNDED
A25-131	BMSH I Lakewood Co LLC	$11,835.16
A25-041	Indiana Business Park LLC	$25,187.61
A25-132	Lakewood Multifamily DST	$9,484.65
A25-120	Season Nails	$2,171.12
A25-121	Season Nails	$2,173.97
A24-363	Stepping Stone Communities Inc	$49,940.73
A25-028	Wells Fargo Vendor Financial Services	$9,682.21*

*To amend previous Resolution CC25-057 due to clerical error.

Resolution No: CC25-141

Background:
Final Board action on 7 abatement petitions, $110,475.45 to be refunded. Taxpayers have filed abatement petitions alleging that their property has been overvalued or that their tax levy is illegal. The Assessor recommends approval of these petitions in the amounts indicated in the corresponding resolutions. The Board is taking action on these abatement petitions by accepting or rejecting the Assessor's recommendations.

If an abatement appeal is approved by the Board, the Treasurer's Office will calculate interest owed and send payment to the taxpayer. The Property Tax Administrator must approve all refunds in excess of $10,000.00. If unsatisfied with this Board's action, a taxpayer may appeal further to the State Board of Assessment Appeals. Abatement refunds over $10,000.00 are recommended for the following reasons:

A25-131: Assessor recommends approval. Equalize value to match 2023.

A25-041: Assessor recommends approval. Adjusted from 100% to 75% completion as building was in shell condition on 1/1/2024.

A24-363: Assessor recommends approval. Per petitioner photo, foundation was pouring on 12/27/2022. Moved from commercial vacant land to residential rate for 2023.

Fiscal Impact: N/A

BCC Briefing Presented on: N/A

Originator: Amber Munck, Assistant County Attorney

Distribution: Board of Equalization

Agenda Item 7.5

M E M O R A N D U M

TO: Honorable Chair and Members of the Board of County Commissioners

FROM: Kimberly S. Sorrells, County Attorney

RE: Abatement Refund of Property Taxes

Date: 6/10/2025

Staff Recommendation: Whereas, the Board of County Commissioners hereby approves the findings and recommendations of the Jefferson County Assessor denoted in the corresponding abatement resolutions and adopts those findings and recommendations as its final action on these abatement petitions.

CASE NO.	PETITIONER	TAXES ABATED REFUNDED
A25-135	Stephen Price Brereton	$6,003.50
A25-037	Tim Fohn	$4,093.02
A25-134	Gerber Family Trust	$4,610.86
A24-449	Alisa Arifovna Gezalova	$216.20
A25-076	GV OCC ARV Owner II LLC	$168,080.78
A25-098	Barbara Kirk	$1,583.92
A25-016	Enedina Lopez	$5,368.20
A25-106	Becky E Osborne	$2,066.35
A25-136	Mary Kathleen Rolsch	$12,575.54
A25-071	Bart Sperry	$3,192.84
A25-122	Spirit Ranch LLC	$11,927.65
A25-108	Braden Wehr	$1,110.01
A25-063	Michael W. Wilkinson	$7,380.25
A25-044	Coby Young	$18,957.76

Resolution No: CC25-142

Background: Final Board action on 14 abatement petitions, $247,166.88 to be refunded. Taxpayers have filed abatement petitions

alleging that their property has been overvalued or that their tax levy is illegal. The Assessor recommends approval of these petitions in the amounts indicated in the corresponding resolutions. The Board is taking action on these abatement petitions by accepting or rejecting the Assessor's recommendations.

If an abatement appeal is approved by the Board, the Treasurer's Office will calculate interest owed and send payment to the taxpayer. The Property Tax Administrator must approve all refunds in excess of $10,000.00. If unsatisfied with this Board's action, a taxpayer may appeal further to the State Board of Assessment Appeals. Abatement refunds over $10,000.00 are recommended for the following reasons:

A25-076: Assessor recommends approval. Per rancher, parcel was grazed in 2024 and qualifies for agricultural classification.

A25-136: Assessor recommends approval. Parcel used in conjunction with schedule 300154762 and qualifies for the residential assessment rate.

A25-122: Assessor recommends approval. Per United States Forest Service, this parcel was admitted to the forestry plan with the adjacent parcel number 300208467 for a total of 60 acres which would qualify as forest agriculture.

A25-044: Assessor recommends approval. Classification changed from vacant land to residential land.

Fiscal Impact: N/A

BCC Briefing Presented on: N/A

Originator: Amber Munck, Assistant County Attorney

Distribution: Board of Equalization

Agenda Item 7.6

M E M O R A N D U M

TO: Honorable Chair and Members of the Board of County Commissioners

FROM: Joe Kerby, County Manager

RE: Deputy Sheriff Trainee Retirement Change – Sheriff and Human Resources

Date: 6/10/2025

Staff Recommendation:

WHEREAS, in Resolution CC22-181 the Board of County Commissioners (BCC) redefined the class of employees who qualify for the County's law enforcement contribution and employer matching contributions to include "Peace Officers," a term that included (a) POST-certified peace officers, (b) JCSO-certified peace officers, and (c) Detention Specialists; and

WHEREAS, The Board of County Commissioners finds it appropriate to additionally include Deputy Sheriff Trainees for purposes of such retirement benefits.

NOW, THEREFORE, BE IT RESOLVED, the Board of County Commissioners hereby amends the definition of "Peace Officers" for purposes of Jefferson County's retirement savings plans to include persons employed by the Jefferson County Sheriff's Office as:

(a) a POST-certified peace officer;
(b) a JCSO-certified peace officer;
(c) a Detention Specialist; or
(d) a Deputy Sheriff Trainee hired to participate in either a POST or Sheriff Department-certified academy.

"POST" refers to Colorado Peace Officer Standards and Training.

Resolution No: CC25-143

Background: Deputy Sheriff Trainees are not currently treated as Peace Officers for purposes of County retirement plans. When a current JCSO Detention Specialist goes to the Department Certified Detention (DCD) or POST academy they are transferred into a trainee position and change retirement systems for the 11-21 weeks they are in an academy. They return to the Peace Officer retirement system after completion of their training. This creates administrative burdens. The Sheriff's Office is requesting that the Board of County Commissioners pass a resolution clarifying that all Deputy Sheriff Trainees be treated as Peace Officers for purposes of Jefferson County's retirement savings plans going forward.

The above-described change will take effect upon the implementation of all alterations to the County's financial management system necessary to effect this change. There are no plan document modifications necessary to implement this change.

Fiscal Impact:

- Year of impact: 2025 and future
- Existing grant or project: No
- New grant or project: No
- Requested in adopted budget: No
- Ongoing or one-time: On-going
- General Fund impact: No
- Staffing impact: No
- Match requirements: No
- Mandate/Contractual obligation: No

BCC Briefing Presented on: 5/13/2025

Originator: Tina Wise, Human Resources, x8405

Distribution:
David Kribs, Sheriff's Office, x5153
Tina Davros, Sheriff's Office, x5313
Jennifer Fairweather, Human Resources, x8402
Tina Wise, Human Resources, x8405
Kurtis Behn, County Attorney's Office, x8923
Eric Butler, County Attorney's Office, x8929
Heather Frizzell, Finance Office x8575

Agenda Item 7.7

M E M O R A N D U M

TO: Honorable Chair and Members of the Board of County Commissioners

FROM: Joe Kerby, County Manager

RE: Amendments to Part 5 Staff Policies, Chapter 1 Rules, Section 3 Regarding the Driving on County Business Policy- County Manager

Date: 6/10/2025

Staff Recommendation:

WHEREAS, proposed amendments notify employees and supervisors that GPS units may be recording video which will assist in monitoring driver safety.

NOW THEREFORE, BE IT RESOLVED, by the Board of County Commissioners of Jefferson County that the existing Driving on County Business Policy is hereby rescinded and replaced with the attached hereto, effective June 10, 2025.

Resolution No: CC25-144

Background:

The existing Driving on County Business Policy provides requirements for drivers, regulations for the use of county vehicles, and regulations for the use of personal vehicles. The existing policy also notifies drivers that the county uses GPS to track vehicle speed, location, diagnostics, hard stops, hard starts, and hard cornering.

Beginning in 2020, Fleet Services installed GPS in county-owned vehicles and equipment. Data is used to enhance driver safety by monitoring driving

habits and vehicle handling. GPS data can also be used to locate drivers who are working in remote sites and to help reduce the county's insurance premiums and liability in the event of an accident.

GPS technology has changed rapidly over the past 4 years, adding video capacity. Fleet Services and Safety & Compliance will be exploring new GPS options for use on county vehicles and equipment.

Proposed amendments to the policy include:

- Adding a clause that notifies drivers GPS units may record video of the interior and exterior of vehicles and equipment.

Fiscal Impact: none

BCC Briefing Presented on: 5/13/2025

Originator: Kate Newman, Deputy County Manager

Distribution:
Janice Mayer, Fleet Services Director, x-5256
Bryan Johnson, Fleet Operations Manager, x-5260
Michael Dobbs, Safety & Compliance Director, x-8447
Eric Butler, Deputy County Attorney, x-8929

Policy Title: Driving on County Business

Policy Number: Part 5 Staff Policies, Chapter 1 Rules, Section 3

Type of Policy: Administrative

Adopting Resolution: CC25-

References: Resolutions CC01-515, CC08-169, CC09-451, CC13-170, CC16-116, CC17-262, CC18-066, CC18-384, CC19-367, CC20-089, CC20-289, CC21-194, CC25-046; Treasury Regulation 1.274-5(k)(6)(ii), Commercial Driver's License Policy, Vehicle Options for Elected Officials Policy, Smoking in County Vehicles and on County Property Policy, Commercial Driver's License Policy, Personnel Rules

Effective Date: June 10, 2025

Adoption Date: June 10, 2025

Administrative Revision Date: Not applicable

Policy Custodian: County Manager

Compliance: All employees

Purpose: To set standards for driving county vehicles and/or personal vehicles for county business.

A. Definitions

1. Discretionary MVR Violations are MVR Violations that are serious in nature, but with the approval of the Department Director, the Driver may still drive on county business.

2. Driver means all persons driving on county business, including employees, interns and volunteers.

3. Motor Vehicle Record (MVR) is the state issued document of the Driver's past three years of driving history.

4. Unacceptable MVR Violations are MVR Violations that are serious in nature and immediately revoke the Driver's eligibility to drive on county business.

5. Vehicle means any personal or county-owned automobile, truck, van or sport utility vehicle, motorcycle or motorized equipment requiring a license to operate.

6. Violation is any conviction of a vehicle-related crime or traffic infraction in the Driver's past three years of driving history.

B. Applicability & Eligibility

1. This policy applies to all county Drivers.

2. Drivers must be 18 years of age or older.

3. Employment offers shall not be extended to people that are required to drive on county business but are not eligible per this policy.

4. Safety and Compliance shall review Drivers' MVRs periodically for eligibility to drive on county business.

5. Any employment position that has "Safety Sensitive Position" listed in the Classification Specifications will be required to submit to a pre-employment drug screen and be placed in the County's monthly random drug testing pool.

6. Drivers who will be driving on county business in either a county or personal vehicle shall have a Colorado Driver's license within 30 days of hire or beginning to serve as an intern or volunteer. Exception: Any nonresident who is temporarily residing in Colorado for the principal purpose of furthering such nonresident's education, is at least eighteen years of age, has a valid driver's license from his or her state of residence, and is considered a nonresident for tuition purposes by the educational institution at which such nonresident is furthering his or her education.

C. Unacceptable MVR Violations

1. Drivers may not have one (1) or more of the following in the past three (3) years

   - Involved in race/speed contest
   - Left scene of an accident
   - Attempted to flee or elude police
   - Vehicular homicide, manslaughter, or assault
   - Any felony involving the use of a vehicle
   - Any violation of state or local law relating to vehicle traffic control arising in connection with a fatal accident
   - More than one (1) Discretionary MVR Violation (See Section D)

2. Drivers with a suspended, revoked, or canceled license may not drive on county business.

3. Drivers with Unacceptable MVR Violations may not drive on county business, which may also lead to dismissal from employment.

D. Discretionary MVR Violations

1. Drivers may not have more than one (1) of the following MVR violations in the past three (3) years)

   - Reckless driving
   - Passed a stopped school bus
   - A suspended, revoked, or canceled license
   - DUI, DWI, and/or DWAI

2. Drivers with a Discretionary MVR Violation may be granted eligibility to drive on county business by the Department Director, with Safety and Compliance consultation.

3. Drivers with a Discretionary MVR Violation who are required to hold a Commercial Driver's License for their position may be granted eligibility to drive on county business by the Department Director and Safety and Compliance.

4. The Department Director and/or Safety and Compliance may require the Driver with a Discretionary MVR Violation to take an online or a behind-the-wheel course(s). Any course may be at the Driver's expense and will be taken in the timeframe prescribed by the Department Director and/or Safety and Compliance.

5. If the Discretionary MVR Violation is a DUI, DWI, or DWAI, the Driver may NOT transport children on county business for three (3) years from the date of the Violation.

6. If the Discretionary MVR Violation or Unacceptable MVR Violation took place during the performance of county business, a county Driver may NOT drive on county business for three (3) years.

7. If the Discretionary Moving Violation is a DUI, DWI, or DWAI that took place during the performance of county business, and the Driver is an employee, the Driver shall be terminated. If the Driver is an intern or volunteer, the Driver shall not continue to serve in that capacity.

E. Violations and Citations

1. Drivers must immediately report all citations and violations received while driving on county business and all Discretionary and Unacceptable MVR Violations received while driving on personal time to their supervisor (or volunteer coordinator).

2. Drivers must immediately report all suspension, revocations, or cancelations of their license to their supervisor (or volunteer coordinator).

3. Supervisors (or volunteer coordinators) shall immediately report all known Violations to Safety and Compliance.

4. Drivers who fail to report such Violations will be subject to disciplinary action that may include revocation of driving privilege or dismissal from employment.

5. Tickets. The Driver shall be responsible for any traffic or parking tickets incurred while driving on county business, except load violations beyond the driver's control.

F. Driver Responsibility

1. County Vehicles

   a. Drivers shall report immediately any known unsafe condition(s), mechanical problems, and any damage to a county vehicle to the Fleet Services Division, the Airport's fleet unit if the vehicle is owned by the airport, or the Sheriff's fleet unit if the vehicle is owned by the Sheriff.

   b. Drivers shall not let unauthorized individuals drive county vehicles.

   c. Drivers shall not use county vehicles for personal purposes except for travel to and from lunch or incidental/personal errands that may be permitted pursuant to the "de minimis" usage exemptions in IRS Publication 15-B, Employers Tax Guide to Fringe Benefits.

   d. If a county fleet vehicle is returned in a condition that requires extensive cleaning due to operator neglect or abuse, the Driver's division may be charged for cleaning the vehicle.

   e. Drivers shall report accurate vehicle mileage at the fueling stations and on the Motor Pool Reservation Sheet. Failure to report mileage accurately may result in loss of privileges and disciplinary action as provided for in the Personnel Rules.

   f. All county vehicles, except those used by Elected Officials per The Vehicle Options for Elected Officials Policy, are equipped with a live GPS tracking unit, which may include video recording of the exterior and interior of vehicles and equipment. The GPS units track vehicle speed, location, diagnostics, hard stops, hard starts and hard cornering. The data is fed back to a software system that allows Fleet, Safety & Compliance and Division Directors to monitor the fleet.

2. Personal Vehicles

   a. If a personal vehicle is to be used for county business, the Driver shall:

1) maintain auto insurance in accordance with state law,

2) provide proof of insurance to Safety and Compliance upon request, and

3) maintain the vehicle's operating condition in accordance with all State and Federal Laws and Regulations.

b. A Driver who chooses to drive their personal vehicle on county business may submit their claims to their own insurance company. The county does not pay for damage to personal vehicles or deductibles on insurance policies.

c. Motorcycles may not be used for county business.

d. County logos shall not be applied to personal vehicles unless otherwise approved by the Department Director.

e. Executive Officers (as that term is defined in the Jefferson County Personnel Rules) who receive a monthly vehicle allowance as taxable income may not be reimbursed for mileage nor drive a county vehicle.

G. Driving Standards

1. Drivers shall be held to a high standard and abide by the following rules when driving on county business:

   a. Use child safety seats and seatbelts in accordance with State law when transporting children,

   b. Require all occupants to wear seatbelts,

   c. Do not use vehicles that are unsafe to operate,

   d. Do not offer rides to hitchhikers,

   e. Lock vehicle doors and remove keys when parked,

   f. Adhere to local, state and federal driving laws and obey warning signs, and

   g. Do not exceed the speed limit.

2. Parking Expenses and Tolls

   The county may reimburse parking and toll expenses for county business related trips. The county will not reimburse for parking and tolls associated with commuting or personal use.

3. Mileage Reimbursement for Personal Vehicles

a. The intent of mileage reimbursement is to compensate the employee for out-of-pocket costs incurred (i.e. fuel, oil, wear and tear) while using their personal vehicle for county-related business.

b. Mileage will be reimbursed only to the driver of the vehicle at the county's set mileage rate. A Claim Voucher, indicating the date, destination, purpose and mileage traveled must be submitted.

c. Mileage to and from a seminar, conference, training session or other country-related business event will be reimbursed to the extent the distance exceeds the normal commute to the employee's work environment. For example, if an employee normally travels 20 miles round trip to work, and the round-trip distance to a conference is 30 miles, the employee may be reimbursed for 10 miles.

d. A Personal Vehicle may not be used to travel if the estimated mileage will exceed the cost of round-trip airfare.

e. Drivers may not use a County Procurement Card to purchase fuel for their personal vehicle without advance, specific approval from their supervisor.

4. Reimbursement for County Motor Pool Vehicles
The county will pay/reimburse for fuel, oil and maintenance costs associated with the use of a county motor pool vehicle. The county will not reimburse for mileage when a county motor pool vehicle is used.

5. Other Modes of Transportation

a. The county may reimburse for reasonable transportation costs from other modes of transportation, such as bus, light rail, taxi services, vehicle sharing services such as Uber or Lyft, etc. in instances where the cost of using such service is comparable to mileage reimbursement and parking.

b. Supervisor approval is required for reimbursement of other transportation costs.

H. Commuting

1. In accordance with IRS regulations, commuting mileage is considered taxable income. Employees may not use Fleet or Motor Pool vehicles to shorten the commute by parking at a county building that is closer to their place of residence and driving to the work location of record in the county vehicle.

2. County vehicle options and IRS provisions for commuting for Elected Officials are found in the Vehicle Options for Elected Officials Policy.

3. Commuting in Fleet or Motor Pool vehicles is not permitted except as specified below:

a. The law enforcement exception to the IRS regulations allows Sheriff, Coroner, and District Attorney law enforcement officers to commute in county vehicles without taxation on the value of the benefit if they meet the requirements of Treasury Regulation 1.274-5(k)(6)(ii), which requires that the employee (1) be full-time employee of a unit responsible for the prevention or investigation of crime, (2) be authorized by law to carry firearms, execute search warrants, and to make arrests, and (3) regularly carries a firearm. Officers may not use the county vehicle for vacation or recreation trips.

b. Employees who are responding to active operational emergencies outside of county business hours may be permitted to use county vehicles to drive to/from their homes. These operational emergencies must be in locations where it is impractical to obtain a county vehicle prior to responding. The employee must have written approval from the Department Director. These employees are prohibited from using these vehicles during non-work hours for personal use except pursuant to the “de minimis” usage exemptions in IRS Publications.

Agenda Item 7.8

M E M O R A N D U M

TO: Honorable Chair and Members of the Board of County Commissioners

FROM: Joe Kerby, County Manager

RE: Amendments to Policy Part 5, Chapter 1, Section 9 Regarding the Remote Work Policy- Human Resources

Date: 6/10/2025

Staff Recommendation:
WHEREAS, proposed amendments that define Colorado resident will provide guidance to employees and supervisors when determining remote work situations.

NOW THEREFORE, BE IT RESOLVED, by the Board of County Commissioners of Jefferson County that the existing Remote Work Policy is hereby rescinded and replaced with the attached hereto, effective June 10, 2025.

Resolution No: CC25-145

Background:
The existing policy allows employees to work outside the office for all or part of their workweek. Jefferson County considers remote working to be a viable, flexible work option when both the employee, the job, applicable income tax laws, workers compensation laws, and cyber security protocols are suited to such an arrangement. Remote work may be appropriate for some employees and jobs but not for others.

The policy also allows employees to work from outside the state for up to 30 consecutive calendar days at a time, and up to a maximum of 60 workdays (based on the employee's work schedule) in a calendar year, subject to supervisor approval. The proposed amendments define a Colorado resident for the purpose of determining when an employee is working remotely from outside the state. An employee is a Colorado resident if either the employee is domiciled in Colorado or the employee maintains a permanent place of

abode in Colorado and spends, in aggregate, more than six months of the tax year in Colorado. Further amendments define domicile.

Fiscal Impact: none

BCC Briefing Presented on: 5/13/2025

Originator: Kate Newman, Deputy County Manager

Distribution:
Nicole Miller, Employee Relations and Training Director, x-8409
Jennifer Fairweather, Chief Human Resources Officer, x-8402
Eric Butler, Deputy County Attorney, x-8929
Andy Corbett, Chief Information Officer, x-8807
Mike Dobbs, Safety & Compliance Director, x-8447
Dan Conway, Chief Financial Officer, x-8507
Heather Frizzell, Finance Director, x-8575

Policy Title: Remote Work

Policy Number: Part 5, Staff Policies; Chapter 1, Rules; Section 9

Type of Policy: Administrative

Adopting Resolution: CC25-

References: Resolutions CC20-149, CC20-360, CC21-075, CC21-303, CC24-311

Effective Date: June 10, 2025

Adoption Date: June 10, 2025

Administrative Revision Date: Not Applicable

Policy Custodian: Human Resources

Compliance: All Elected and Appointed Official's Offices and staff

Purpose: To allow employees to work outside the office for all or part of their workweek. Jefferson County considers remote working to be a viable, flexible work option when both the employee, the job, applicable income tax laws, workers compensation laws, and cyber security protocols are suited to such an arrangement. Remote work may be appropriate for some employees and jobs but not for others.

A. Applicability

Either an employee or a supervisor can suggest working remote as a possible work arrangement. A remote working arrangement may be discontinued based on the needs of the County or the employee.

B. Eligibility

1. Employee suitability: The employee and supervisor shall assess the needs and work styles of the employee to ensure that remote work will be a successful arrangement.

2. Job responsibilities: The employee and supervisor shall discuss the job responsibilities and determine if the job is appropriate for a remote work arrangement.

3. Equipment needs: The employee and supervisor shall discuss the physical workspace needs and the appropriate supplies and equipment needed for remote work. The employee is responsible for creating a workspace that meets ergonomic standards. Before an employee's remote work request may be approved, the employee and supervisor must document that the proposed workspace meets all requirements in Section F. below, and employee must

acknowledge in writing his or her responsibility to maintain a safe and ergonomic work environment.

4. Policies and Procedures: Employees shall adhere to all County policies and procedures while working remotely.

C. Working from Outside the State

1. Employees may work outside the State of Colorado for up to 30 consecutive calendar days at a time, and up to a maximum of 60 workdays (based on the employee's work schedule) in a calendar year, subject to supervisor approval. Remote work outside the State of Colorado beyond these time frames shall not be permitted unless otherwise required by law and reviewed by Human Resources and Safety & Compliance.

    a. Under no circumstances may an employee work for the county while residing outside of the state of Colorado.

    b. Residing for purposes of this provision means establishing a place to live for a considerable amount of time, as distinguished from vacation or temporary travel.

    c. An employee is a Colorado resident if either:

        1) The employee is domiciled in Colorado; or

        2) The employee maintains a permanent place of abode in Colorado and spends, in aggregate, more than six months of the tax year in Colorado.

    d. An employee's domicile is the place they consider their home. It is the permanent place of abode to which a person intends to return, whenever they are away. An employee's permanent place of abode may include but is not limited to, a house, condominium, apartment, room in a house, or mobile home.

    e. The employee's current address must be a valid Colorado address.

    f. Various factors may be considered in determining a domicile and an employee's domicile is demonstrated by objective evidence. Example of evidence of domicile may include:

        1) The most prior year state tax return filed as a resident of Colorado;

        2) A Colorado-issued driver's license or a Colorado-issued ID;

        3) A motor vehicle registration;

4) Voter registration;

5) Residency of spouse and dependents;

6) Ownership and occupation of real property; and

7) Residency status for the purpose of college tuition.

8) See 1 CCR 201-2: 39-22-103(8)(a)(2) for further examples of domicile.

9) Once an employee's domicile is established in Colorado, it will continue to be the employee's domicile until the employee establishes domicile in another state.

2. Employees shall be responsible for assuring compliance with income tax obligations to states and localities outside of Colorado.

3. Working remotely from out of the country is permitted in limited circumstances such as travel, for less than 30 consecutive calendar days when approved by a Department or Division Director, or Elected or Appointed Official,

   a. If the employee intends to use county information technology equipment or access county information technology resources from out of the country, the employee must request a cyber-security review and receive approval from Business Innovation & Technology prior to performing work outside of the county for any period of time.

   b. Under no circumstances may an employee work for the county while residing outside of the country. Residing for purposes of this provision means establishing a place to live for a considerable amount of time, as distinguished from vacation or temporary travel.

D. Equipment

1. County-owned IT equipment (PCs, monitors, etc.) and associated supplies may be taken home by employees for use in the performance of their job upon approval of the employee's supervisor. Jefferson County shall determine, with information supplied by the employee and the supervisor, the appropriate equipment needs (including hardware, software, employee-provided phone, and other office equipment) for each remote work arrangement. Equipment supplied by the County shall be maintained by the County. All necessary repairs or replacement of County supplied equipment shall take place at County offices. Equipment supplied by the employee, if deemed appropriate, shall be maintained by the employee. Jefferson County accepts no responsibility for damage or repairs to employee-owned equipment.

2. Jefferson County reserves the right to make determinations as to appropriate equipment, subject to change at any time. The employee agrees that Jefferson

County equipment shall not be used by anyone other than the employee. The employee shall not make any changes to security or administrative settings on Jefferson County equipment.

3. The employee understands that all tools and resources provided by the County shall remain the property of the County at all times. The employee shall report an inventory of all Jefferson County property received and agree to take appropriate action to protect the items from damage or theft. Upon termination of employment, all equipment shall be returned.

4. Jefferson County shall supply the employee with appropriate office supplies (pens, paper, etc.) as deemed necessary. Jefferson County shall also reimburse the employee for approved business-related expenses in accordance with the Employee Reimbursement Policy.

E. Security

1. Consistent with the expectations of information security for employees working at the office, remote employees shall be expected to ensure the protection and security of County information that is accessible from their home office or work location in accordance with County privacy, HIPAA, CJIS, PCI and security policies and applicable laws or regulations. Steps include the use of locked file cabinets and desks, regular password maintenance, and any other measures appropriate for the job and the environment. If the business process allows, employees shall not keep or store physical documents with sensitive information. If physical documents with sensitive information need to be used at home, they shall be kept in a locked location. Employees who have confidential physical documents with sensitive information at home shall bring these documents to the office to be stored or shredded using the County's confidential shredder at least monthly.

F. Work Environment and Safety

1. The employee shall establish an appropriate work environment within his or her home or remote work location. Jefferson County is not responsible for costs associated with the setup of the employee's home office, such as remodeling, furniture or lighting, nor for repairs or modifications to the home office space, except as otherwise required by law.

2. Employees are expected to maintain their home workspace in a safe manner, free from safety hazards. Injuries sustained by the employee in a home office location and in conjunction with his or her regular work duties may be covered workers' compensation. Remote employees are responsible for notifying the employer of such injuries as soon as practicable. The employee is liable for any injuries sustained by visitors to his or her home worksite.

3. Employees shall ensure a proper ergonomic set-up and should take measures to incorporate appropriate stretching and moving during the workday. Safety &

Compliance is available to assist with ergonomic evaluations of home offices. Upon consultation with Safety & Compliance, the County may choose to provide recommended equipment at its own cost.

G. Expectations

1. Successful on the job performance and meeting the needs of County operations is an essential expectation for all remote work arrangements. Prospective remote workers are encouraged to discuss expectations of remote working with family members prior to entering a schedule.

2. Employees are expected to be available and accessible as they would while in the office. Regular communication and meetings are expected to occur as they would normally using the technology available to employees. Employees shall comply with all Jefferson County rules, policies, practices, and instructions that would apply if the employee were working at the physical work location.

3. The employee shall report to the physical work location as necessary upon directive from his or her supervisor. The employee shall continue to communicate regularly with his or her supervisor and co-workers. The employee will maintain satisfactory production and performance standards.

H. Time Worked

1. Remote employees who are non-exempt from the overtime requirements of the Fair Labor Standards Act are required to accurately record all hours worked using Jefferson County's time-keeping system. Hours worked in excess of those scheduled per day and per workweek shall require the advance approval of the employee's supervisor.

2. Travel Time

   a. Employees must obtain supervisor approval to work both from a remote location or home office and in the county office on the same workday. In such cases, the time spent traveling between the employee's remote office and the county office may be compensable if the employee is not afforded the opportunity to effectively devote the period between the remote work and office work period to their own personal purposes.

Agenda Item 7.9

M E M O R A N D U M

TO: Honorable Chair and Members of the Board of County Commissioners

FROM: Joe Kerby, County Manager

RE: Community Corrections Supplemental, State of Colorado and Intervention Supplemental of $150,000, Operations

Date: 6/10/2025

Staff Recommendation: Wherefore, the Board of County Commissioners approves Allocation #2 with the State of Colorado for fiscal year 2024-2025 and allows the county to increase the current contract amount by $150,000, from $4,617,646.77 to $4,767,646.77.

Resolution No: CC25-146

Background: Community Corrections anticipates exceeding the original State of Colorado contract amount of $4,617,646.77 by approximately 3% due to an increase in residential bed use. In response, the State of Colorado has awarded Allocation #2 as an additional allocation in the amount of $150,000.

Fiscal Impact: Justice Services will receive a supplemental in the amount of $150,000 from the State of Colorado, for the Intervention subcontract, which will result in a neutral fiscal impact to Jefferson County.

BCC Briefing Presented on: 5/13/2025

Originator: Kristin Heath, Director of Justice Services, x-6694

Distribution:
Lauren Beachem, Justice Services, x-4668 (return original to)
Dan Conway, Chief Financial Officer, x-8507
Carey Markel, Deputy County Attorney, x-8964
Clerk to the Board

Agenda Item 7.10

M E M O R A N D U M

TO: Honorable Chair and Members of the Board of County Commissioners

FROM: Joe Kerby, County Manager

RE: Amendments to Policy Part 2, Chapter 1, Section 2 Regarding Contract and Delegation Authority and Policy Manual Part 4, Chapter 6, Section 1 Regarding Purchasing Policy- Board of County Commissioners and Grants and Procurement Division

Date: 6/10/2025

Staff Recommendation:

WHEREAS, the proposed amendments to the Purchasing Policy will implement efficiencies and alignment to the County's Enterprise Resource Planning (ERP) system, Workday, and

WHEREAS, an amendment to the Contract and Delegation Authority Policy to change the delegation to terminate purchasing contracts to the Purchasing Operations Manager will compliment a change to the Purchasing Policy.

NOW THEREFORE, BE IT RESOLVED, by the Board of County Commissioners of Jefferson County that the existing Contract and Delegation Authority Policy and the existing Purchasing Policy are hereby rescinded and replaced with the policies attached hereto effective June 10, 2025.

Resolution CC25-147

Background:
The Purchasing Policy had not been updated since 2019, despite a stated intent at that time to revisit within one year. Since then, the County transitioned from JD Edwards to Workday (early 2021), yet the policy and procedures still reference outdated JD Edwards processes. This misalignment

has led to confusion, errors, and rework.

The recommended updates presented today address these critical gaps and modernize the policy to reflect our current systems and practices.

While the current recommendations are critical and ready for implementation, we recognize that further efficiencies are possible. A future phase of updates could reduce processing times for purchase requisitions by 4 to 10 weeks, potentially saving $300,000+ in staff time annually. The team plans to begin working on these potential changes in early 2026.

The following revisions to the Purchasing Policy are being recommended to reflect operational updates, system transitions, and improvements to clarify roles and responsibilities:

1. Naming Update
   - Changed references from “Purchasing Operations” to “SIF-Procurement” to align with current organizational structure.
   - Changed the policy’s name from Purchasing Policy to Procurement Policy.

2. Policy Simplifications and Clarifications
   - Removed the definition of "best value" to streamline terminology.
   - Updated the Special Notification and Review Requirements chart.
   - Clarified that the Purchasing Operations Manager is authorized to sign purchase order, change orders, and terminations.
   - Updated the roles and responsibilities for receiving supplier protests, including a clear process and timelines.

3. Approval Processes and Thresholds
   - Updated contract and purchase order approval threshold charts to reflect implementation of Workday, with supporting details moved to a new Appendix C of the Purchasing Procedures.
   - Revised policy for Special Authority Change Orders: capped at ≤10% of the original value and removed the dedicated chart, with further details provided in Appendix C of the Purchasing Procedures.

4. Disaster Response Authority
   - Added a reference to the Declaration of Disaster or Emergency Policy which delegates contract signature authority to the Sheriff or the Emergency Management Manager during a declared disaster or

emergency.

5. Administrative Responsibilities and Ethics
   - Noted that the Procurement Card (p-card) program will now be administered by Finance instead of Procurement.
   - Added language stating that individuals may be excluded from procurement activities due to conflicts of interest.
   - Enhanced code of ethics to clarify expectations around financial interests.

6. Contract Termination Authority
   - Delegated authority to terminate contracts to the Purchasing Operations Manager.
   - This delegation required an amendment in the Contract and Delegation Authority Policy, which delegates termination authority to Division Directors. The proposed amendment for the Contract and Delegation Authority Policy specifies the Division Director has authority to terminate non-purchasing contracts.

Fiscal Impact: None

BCC Briefing Presented on: 5/13/2025

Originator: Kate Newman, Deputy County Manager

Distribution:
Dan Conway, Chief Financial Officer, 303-271-8507
Mary O'Neil, Grants Management & Procurement Director, 303-271-8570
Vera Breackman, Purchasing Operations Manager, 303-271-8591

Policy Title: Procurement

Policy Number: Part 4 Financial Administration, Chapter 6 Procurement and Contracting, Section 1

Type of Policy: Administrative

Adopting Resolution: CC25-

References: Uniform Commercial Code; Amendment 41; 2 Code of Federal Regulations 200; Resolutions CC03-417, CC07-106, CC12-198, CC16-179, CC19-344; Procurement Procedures

Effective Date: June 10, 2025

Adoption Date: June 10, 2025

Administrative Revision Date: Not applicable

Policy Custodian: Grants and Procurement

Compliance: All Elected and Appointed Offices and staff

Purpose: To establish policies governing purchasing activities.

A. General Responsibility

1. Strategy Innovation and Finance (SIF)-Procurement is the County's authorized agent for the lease, rental and purchase of products and services for all County departments, divisions and elected offices (collectively "County Entities"), in accordance with any applicable provisions of laws and regulations, and in accordance with County policies promulgated by resolutions approved by the Jefferson County Board of County Commissioners ("BCC").

2. SIF-Procurement will submit products and services to proposal or bid, issue purchase orders, and in conjunction with the County Attorney's office, negotiate and enter into contracts and Master Agreements for products and services.

3. The SIF-Procurement shall not participate in the negotiation of agreements for the lease, purchase, or sale of real property.

4. It is the responsibility of SIF-Procurement to provide "best in class" procurement and contracting support services that will provide the best value to the County as set forth in Section B.5 of this Policy. SIF-Procurement shall implement sound business practices and programs that promote fiscal responsibility, mitigate County risk, strategically position the County for future benefit, and facilitate transparency and due diligence in all County transactions.

5. SIF Procurement is responsible for reviewing requisitions for completeness and clarity and notifying County Entities when there is a need for additional information or a recommended change in specifications. SIF-Procurement shall clarify the quality, quantity and type of items requisitioned so that the best interests of the County may be served. No changes, however, will be made to a requisition until after collaborative discussion with and subsequent notification to the affected County Entity.

6. SIF-Procurement may negotiate agreements for products and services that can be used by other local governmental entities to promote goodwill and leverage economies of scale consistent with the provisions of Colorado statute.

7. SIF-Procurement has authority, in accordance with its established Procedures, to determine the manner in which a product or service will be procured. For the purchase of products or services under a Federal or State grant, the cost plus a percentage of cost and percentage of construction cost methods of contracting shall not be used.

B. Procurement & Contracting Procedures

1. Procedures that will support these policies are set forth under separate cover ("Procedures"). These Procedures shall apply to all County Entities and will incorporate the requirements of applicable state statutes and federal laws that may govern certain County transactions.

2. Procedures will be established collaboratively with other County Entities as appropriate in an effort to ensure efficient and effective operations.

3. All Procedures shall be established in accordance with sound business practices, principles, and any applicable provisions of laws and regulations. The County Attorney's office shall review procedures to ensure consistency with County policies and any applicable state statutes and federal laws that may govern certain County transactions.

4. Laws and regulations applicable to the procurement process will be referenced in the Procedures.

5. Products and services subject to competitive procurement shall be awarded to the supplier that can provide the "Best Value" for the County. Best Value will be determined based upon clearly stated evaluation criteria set forth in the competitive document and according to the Procurement Procedures, unless otherwise required by applicable laws and regulations.

6. Exceptions to the purchasing requirements are set forth in the Procurement Procedures.

C. Special Review and Approval Requirements

In addition to the approval requirements set forth in this Policy and the Purchasing Procedures, the following items shall require approval by the reviewing authority prior to purchase:

Item	Reviewing Authority
County Vehicles/Equipment, excluding Sheriff and Airport	Director of Fleet Services
Computer hardware and software products & services	Chief Information Officer or Deputy Chief Information Officer
Electrical Equipment (with special voltage requirements) for use in Facility Management maintained buildings, grounds and facilities.	Director of Facilities Management

D. Approval Authority

1. The BCC delegates authority to the Purchasing Operations Manager to execute purchase orders, purchase order change orders, any contract or contract amendment, and documents terminating a contract or purchase order processed through SIF-Procurement in accordance with this Procurement Policy and the Procurement Procedures.

2. Original contracts and original purchase orders signed by the Purchasing Operations Manager shall require the additional approvals in the policy chart below for non-Appointed and non-Elected Official offices and as further defined in Appendix C of the Procurement Procedures. Contract amendments, renewals, and purchase order change orders shall only require the additional approvals as outlined in Appendix C of the Procurement Procedures:

Original Contract or Original Purchase Order Value	Additional Approval (for non-Appointed and non-Elected Officials Offices)
All contracts and purchase orders	Division Director or designee (Cost Center Manager)
>$100,000	Department Director
>$250,000	County Manager

Original Contract or Original Purchase Order Value	Additional Approval (for non-Appointed and non-Elected Officials Offices)
>$500,000	Board of County Commissioners

3. The BCC delegates authority to any authorized County Representative identified in any contract to sign Special Authority Change Orders in the amount of ≤10% of the original contract or purchase order value, as authorized by the contract or purchase order and the Procurement Procedures.

4. For declared disasters or emergencies, refer to the Declaration of Disaster or Emergency Policy for delegated purchasing and contracting authority during a declared disaster or emergency.

5. Please see the Contract and Delegation Authority Policy for additional delegation information, limitations and requirements.

E. Supplier Relations

1. Market Competition

   SIF-Procurement shall encourage and provide equitable opportunities among qualified suppliers for fair and equal competition through the implementation of its Procedures. Such competition shall support the strategic initiatives of the County and establish mutually beneficial relationships between the County and its suppliers.

2. Strategic Supplier Relationships

   a. For purposes of this Policy, strategic supplier relationships are defined as long term commitments characterized by information sharing, cooperative continuous improvement efforts, and sharing of risks and rewards. Under the direction of the Purchasing Operations Manager, the selection of a strategic supplier is a collaborative effort with primary stakeholders and is based upon a critical and thorough analysis of the County's long-term needs as they relate to the product and/or service, a thorough market analysis, objective evaluation of all critical requirements, and other vigorous due diligence procedures as set forth procedurally.

   b. Strategic supplier relationships must provide 'Best Value' as defined in Section B.5 of this Policy.

3. Preferences

   No provision is made in this Policy for set-asides for minority or women owned

businesses, nor for dollar percentage or other types of preferential considerations for local vendors and contractors, except as directed by federal or state laws or regulations, statute, or by the funding entity consistent with those laws.

4. Supplier Grievances

   a. The aggrieved party bears the burden of complying with all applicable Procedures, which are available upon request, when filing a protest.

   b. All protests must be sent to the Purchasing Operations Manager and will be addressed in accordance with the Procedures. The determination and resolution of the protest, as set forth in the Procedures, shall be considered final.

F. Negotiations and Good Faith Requirement

1. All parties involved in the negotiation, performance or administration of County procurement actions shall perform these activities in good faith. New or additional information that in the opinion of the Purchasing Operations Manager might affect the award, may be considered as part of the negotiations with the selected supplier.

2. SIF-Procurement and/or the County Attorney's office in conjunction with the County Entity are authorized to facilitate negotiations concerning general business and legal terms and conditions of the transaction.

G. Use of County-Wide Programs

1. SIF-Procurement, for the benefit of the County, may establish programs and agreements for similar products and services that are utilized by multiple County Entities. Entities under the direction of the County Manager shall participate in these programs and agreements for their similar needs to ensure the best use of the taxpayers' money subject to G.2.below. Elected Officials' offices are strongly encouraged to participate in these programs and agreements.

2. Purchases of similar products and services outside of County programs and agreements must have appropriate justification and documentation as set forth in the Procedures and must be approved by the Purchasing Operations Manager.

3. Procurement Card ("P Card" or "Pro Card")

   Finance shall administer and manage the program as set forth in Procurement Card Policies and Procedures.

H. Code of Ethics

1. SIF-Procurement may preclude Jefferson County employees or other outside parties from being involved in purchasing activities for failure to comply with the

Code of Ethics or to avoid the appearance of a conflict of interest.

2. Any person employed by Jefferson County who engages in purchasing activities for the County will abide by this code and will:

   a. Avoid engaging in acts or actions that could be perceived as immoral, illegal or unethical behavior in relationships, actions, and communications.

   b. Conduct all purchasing activities in accordance with governing laws and regulations and in keeping with sound business ethics, professional courtesy, and competence.

   c. Demonstrate loyalty to the County by diligently adhering to County policies and procedures.

   d. Adhere to the authority granted them by the County.

   e. Avoid any private or professional activity that would create a conflict between personal interests and the interests of the County.

   f. Avoid acquiring or maintaining any financial interest or otherwise, direct or indirect, with any supplier that would conflict in any manner or degree with assigned purchasing activities. The same restrictions and disclosure requirements apply to the County employee's immediate family (spouse, partner, or children) and other family members in the County employee's household (publicly traded shares on stock that are selected and administered by a third person, such as a mutual fund or retirement plan are excluded from this restriction.)

   g. Disclose, in writing to their division/department director/elected official, any potential conflict of interest.

   h. Refuse, directly or indirectly, gifts, gratuities or any other thing of value from present or potential suppliers that might influence or appear to influence procurement decisions.

   i. Afford suppliers equal opportunity to compete for County business when competition is warranted and purchase without prejudice, striving to obtain the maximum value for each dollar of expenditure.

   j. Adhere to and protect the supplier's business and legal rights to confidentiality for trade secrets and other proprietary information subject to public records requirements.

   k. Enhance the proficiency and stature of the purchasing profession by adhering to the highest standards of ethical behavior.

Policy Title: Contract and Delegation Authority Policy

Policy Number: Part 2, Board Administration; Chapter 1, Board of County Commissioners; Section 2

Type of Policy: Administrative Policy

Adopting Resolutions:

References: Statutes §30-11-107 (1) (aa) C.R.S.; Resolutions CC86-956, CC90-556, CC90-668, CC90-754, CC90-857, CC90-861, CC91-24, CC91-176, CC91-540, CC92-218, CC94-224, CC92-334, CC92-842, CC92-918, CC93-253, CC93-443, CC93-749, CC94-201, CC99-457, CC00-356, CC00-411, CC03-592, CC09-259, CC10-217, CC11-152, CC11-172, CC12-172, CC12-198, CC15-043, CC17-190, CC19-290, CC19-368, CC21-055, CC22-216, CC24-191, CC25-045

Effective Date: June 10, 2025

Adoption/Revision Date: June 10, 2025

Administrative Revision Date: Not Applicable

Policy Custodian: Board of County Commissioners

Compliance: All Elected and Appointed Officials Offices and Departments

Purpose: To delegate the Board of County Commissioners' authority to contract.

A. Authority

1. The County has authority pursuant to Section 30-11-101(1)(d), C.R.S., "to make all contracts and do all acts in relation to the property and concerns necessary to the exercise of its corporate or administrative powers."

2. The Board of County Commissioners (BCC) has authority pursuant to Section 30-11-107(1) (aa), C.R.S., to establish policies and procedures regarding entering into contracts binding on the County and to delegate its power to enter such contracts pursuant to such policies and procedures.

B. Contract Signature Delegation

1. The BCC delegates authority to sign all contracts, contract amendments, and contract terminations, excluding contracts involving the county's real property interests to county Elected or Appointed Officials, when the contract value can be accounted for in the Elected or Appointed Official's authorized budget. If the agreement is a grant award, the Elected or Appointed Official is authorized to sign the grant award agreement provided the Elected or Appointed Official has followed the County's Fiscal Review of Grants Policy, and the dollar amount will

be included in a budget supplemental. An Elected or Appointed Official may further delegate its signature authority.

2. The BCC's authorization to execute a contract shall be by resolution. Except as otherwise provided in this Policy, the resolution shall constitute authorization of the BCC for the Chairman, or the Chairman pro-tem in the absence of the Chairman, or any Commissioner in the absence of the Chairman and the Chairman pro-tem, to execute the contract and all documents necessary for the completion of the transaction, amendments to the contract, or other objects of the contract unless otherwise stated in the contract, including, but not limited to, any attachments to the contract, certifications, applications, licenses, permits, or any other documents required or implied by the terms of the contract.

3. The BCC or an individual delegated signature authority in accordance with this policy may not execute documents, contracts, or amendments which:

    a. Obligate the County to a sum in excess of the contract sum or a term in excess of the contract term unless such additional amount or additional contract time is authorized in the resolution approving the contract or in the contract itself;

    b. Have not been approved as to form by the County Attorney's Office prior to execution except as otherwise agreed to in writing between the authorized signatory and the County Attorney's Office or as set forth in an agreement between the District Attorney for the 1st Judicial District and the County; or

    c. Have not been acquired in accordance with the Purchasing Policy and Procedures, for documents, contracts, or amendments which authorize the expenditure of County funds.

4. All documents must be approved by the County Attorney's Office prior to execution except as otherwise agreed to between the authorized signer and the County Attorney's Office or as set forth in an agreement between the District Attorney for the 1st Judicial District and the County.

5. The BCC delegates authority to Division Directors to execute documents terminating a non-purchasing contract.

6. Real Property: The BCC's execution of a contract for the conveyance or acquisition of an interest in real property shall be in accordance with the Sale or Exchange of County Owned Real Property Policy.

7. The BCC specifically delegates signature authority as set forth in the Purchasing Policy.

8. The Board of County Commissioners also specifically delegates signature authority as set forth in the Non-Purchasing Delegation Authorities below. The

Signature Authority designee may further delegate its signature authority. The BCC may always authorize signature of a contract by resolution in lieu of any delegation set forth herein or in any other policy.

C. Non-Purchasing Delegation Authorities

1. Non-Purchasing Contracts are contracts that establish a relationship with a vendor or supplier but that do not go through the County's procurement process. Examples include, but are not limited to, those identified in Section E, Non-County Agency Program contracts, contracts establishing or processed through a fiscal agent relationship, intergovernmental agreements and memorandum of understandings, leases for real property, and grants. County policy still requires that all Grant Agreements are briefed to the Board of County Commissioners. See Fiscal Review of Grants and Agreements Policy.

D. General Delegation of Authorities:

For all contracts and agreements, including intergovernmental agreements, memorandum of understanding and similar agreements, not specifically identified in the Specific Delegation of Authorities Chart below, the Board of County Commissioners delegates to the County Manager authority to sign any contract, contract amendment or other contract document less than $500,000.

Agreements signed by the County Manager shall require the following additional approvals:

- All contracts, regardless of contract value, require approval of the Division Director.
- All contracts greater than or equal to $100,000 require the approval of the Department Director.

E. Specific Delegation of Authorities:

1. Business Associate Agreements

   a. Designated Privacy Officer has the authority to execute Business Associate Agreements.

2. Claims and Lawsuits

   a. Settlements

      1) For Settlements less than or equal to $500,000, the County Attorney has the authority to approve any settlement of any claim or lawsuit involving the County, its Elected Officials, employees, agents, or entities and execute documents related to such settlement.

2) For Settlements less than or equal to $150,000, the County Attorney's delegate has the authority to approve any settlement of any claim or lawsuit involving the County, its Elected Officials, employees, agents, or entities and execute documents related to such settlement.

b. Litigation and Litigation Costs:

1) The County Attorney has the authority to commence litigation on behalf of the County or any of its Elected Officials, boards, and commissions that have standing to commence litigation and to pay all costs and expenses related to litigation.

2) The County Attorney has the authority to defend against all claims brought against the County or any of its boards, elected officials, or employees and to pay all costs and expenses related to the defense.

c. Appeals: The County Attorney has the authority to defend any appeal or file an appeal from an adverse ruling of a lower court or administrative body.

d. Attorneys: The County Attorney has the authority to enter into contracts or retain services of outside counsel and other professionals performing services related to legal services and authorize payment for services.

e. Property and Casualty Claims

1) For property and casualty claims greater than $100,000, the County Attorney has the authority to approve settlement of property/casualty claims and execute documents related to such settlement. Claims cannot include Federal claims and if the claim includes personal injury, County Attorney Office approval is required.

2) For property and casualty claims less than or equal to $100,000, the County Manager has the authority to approve settlement of property/casualty claims and execute documents related to such settlement. Claims cannot include Federal claims and if the claim includes personal injury, County Attorney Office approval is required.

3) For property and casualty claims less than or equal to $50,000, the Deputy County Manager has the authority to approve settlement of property/casualty claims and execute documents related to such settlement. Claims cannot include Federal claims and if the claim includes personal injury, County Attorney Office approval is required.

4) For property and casualty claims less than or equal to $25,000, the Safety and Compliance Director has the authority to approve settlement of property/casualty claims and execute documents related to such

settlement. Claims cannot include Federal claims and if the claim includes personal injury, County Attorney Office approval is required.

f. Worker's Compensation

1) For worker's compensation claims greater than $100,000, the County Attorney has the authority to approve settlement of Workers' Compensation claims, including subrogation claims involving at-fault third parties, when the settlement is approved by Workers' Compensation counsel and/or the County Attorney's Office and execute documents related to such settlement. To approve settlement of Workers' Compensation claims when the settlement is approved by Workers' Compensation counsel and the County Attorney's Office and execute documents related to such settlement.

2) For worker's compensation claims less than or equal to $100,000, the County Manager has the authority to approve settlement of Workers' Compensation claims, including subrogation claims involving at-fault third parties, when the settlement is approved by Workers' Compensation counsel and/or the County Attorney's Office and execute documents related to such settlement. To approve settlement of Workers' Compensation claims when the settlement is approved by Workers' Compensation counsel and the County Attorney's Office and execute documents related to such settlement.

3) For worker's compensation claims less than or equal to $50,000, the Deputy County Manager has the authority to approve settlement of Workers' Compensation claims, including subrogation claims involving at-fault third parties, when the settlement is approved by Workers' Compensation counsel and/or the County Attorney's Office and execute documents related to such settlement. To approve settlement of Workers' Compensation claims when the settlement is approved by Workers' Compensation counsel and the County Attorney's Office and execute documents related to such settlement.

4) For worker's compensation claims less than or equal to $25,000, the Safety and Compliance Director has the authority to approve settlement of Workers' Compensation claims, including subrogation claims involving at-fault third parties, when the settlement is approved by Workers' Compensation counsel and/or the County Attorney's Office and execute documents related to such settlement. To approve settlement of Workers' Compensation claims when the settlement is approved by Workers' Compensation counsel and the County Attorney's Office and execute documents related to such settlement.

3. Conservation Trust Fund

a. Recertification Forms: The Director of Strategy, Innovation and Finance has the authority to execute recertification forms for conservation trust funds.

b. Reimbursements and Requests for Payments: The Director of Parks and Conservation has the authority to approve and execute reimbursements and requests for payments through grant programs.

4. County Building, Facility and Grounds Use

a. Reservation Agreements: Director of Facilities Management or Parks and Conservation has the authority to execute building, facility, and grounds use agreements not to exceed a duration of one year.

b. Boettcher Mansion:

1) For Social Event Contracts, the Director of Parks and Conservation has the authority to execute Social Event Contracts for the reservation of Boettcher Mansion facilities for social events.

2) For Wedding and Showcase Agreements, the Director of Parks and Conservation has the authority to execute Wedding Showcase Agreements presenting vendor's marketing materials.

3) For Conference Contracts, the Director of Parks and Conservation has the authority to execute Conference Contracts for the reservation of Boettcher Mansion facilities for conferences.

4) For Approved Vendor Program Contracts, the Director of Parks and Conservation has the authority to execute Contracts with approved vendors at Boettcher Mansion.

c. Fairgrounds

1) Approved Vendor Program Contracts: The Director of Parks and Conservation has the authority to execute contracts with approved vendors at the Fairgrounds.

2) Jefferson County 4-H Judging Agreements: The Director of Parks and Conservation has the authority to execute Jefferson County 4-H Judging Agreements.

d. Airport: Approved Airshow Contracts: The Director of Development and Transportation has the authority to execute contracts with vendors, performers, sponsors and others for purposes of facilitating the air show at the Rocky Mountain Metropolitan Airport.

5. Human Services Contracts and Agreements

a. Contracts:

   1) The Director of Human Services has the authority to execute human services-related agreements that do not involve real property whose amounts do not exceed $100,000 (other than TANF funded as identified below). This authority shall not include the execution of contracts necessary for the ordinary operations of a county office including but not limited to facilities operation, information systems or construction management.

   2) The Director of Human Services has the authority to execute contract amendments for contracts within the Human Services Director's execution authority that do not allow the total amount of the contract, as amended, to exceed $100,000.

b. State and Federal Documents: The Human Services Director has the authority to execute regular and routine State and Federal documents such as reports, certifications, forms and environmental review clearances and similar documents with other governmental, quasi-governmental, and nonprofit entities.

c. American Jobs Center: The Human Services Director has the authority to execute documents related to the administration of the American Jobs Center which have been approved by the Workforce Development Board in accordance with the Workforce Innovation Opportunity Act and which do not exceed $100,000 including: Hiring Event Agreements, individual client school tuition, books, childcare, support or training service agreements and contracts for outdoor activities.

d. Temporary Assistance to Needy Families Fund: The Human Services Director has the authority to execute contracts funded solely through the use of Temporary Assistance to Needy Families Funds for which there is no monetary limit.

e. Community Development:

   1) State and Federal Documents: The Human Services Director has the authority to execute regular and routine State and Federal documents such as reports, certifications, forms and environmental review clearances related to State or Federal funding agreements executed by the County.

   2) Expenditure of Federal and State Grants: The Human Services Director has the authority to execute contracts or minor amendments with subcontractors involving the expenditure of Federal or State grants handled by the Community Development Division when the BCC has

approved the projects and the amount of funds for each project and the County Attorney has approved the contract as to form.

3) Amendments to Contracts: The Human Services Director has the authority to execute amendments to contracts when there are adjustments to scope of services or budget exhibits which are minor amendments that do not increase the overall budget amount in the contract as permitted by the Community Development Grants Policy or modify the project purpose approved by the BCC and to execute amendments to contracts when the BCC has approved additional services.

6. Impact Assistance Grants

   a. Applications: Chairman of the Board of County Commissioners has the authority to execute Impact Assistance Grant Applications regarding Payment in Lieu of Taxes from the State of Colorado.

7. Information Technology

   a. Agreements and Subscriptions: The Director of Business Innovation Technology has the authority to execute information technology-related agreements needed in the course of conducting daily business activities other than Software Licenses (of whatever type – traditional licenses, software as a service etc., except if they are Trail or Pilot agreements.) Software or Hardware maintenance support agreements or professional service agreements. The dollar threshold of these agreements is not to exceed $500 and prior County Attorney review and approval is required. Examples of these types of agreements include but are not limited to Non Disclosure Agreements, Domain Registration Agreements and Trial or Pilot agreements.

8. Non-County Agency & Program (NCAP) Funding Request Agreements

   a. Agreements per the NCAP Policy: The authority to sign funding agreements with Non-County Agency & Program (NCAP) entities that receive annual funding from Jefferson County are specified in the NCAP Policy and Procedure.

9. Other Agreements

   a. No-Cost Agreements: The Department Director has the authority to sign agreements for services, products, or data-sharing that do not require, either by a specific condition or a secondary necessity to administer the agreement, the county to contribute financially or in-kind to the agreement (not including limited staff time needed to process or monitor an agreement).

b. Presentation Agreements: The Department Director has the authority to sign agreements governing a County employee or volunteer giving a presentation off of County property.

c. Performance Guarantee Agreements: The Development and Transportation Department Director has the authority to sign agreements relating to performance guarantees as set forth in Section A.7 and C of the Performance Guarantee Policy.

10. Conservation and Parks Department Contracts, Agreements and Matters

a. CSU Extension

1) Jefferson County 4-H Judging Agreements: The Director of CSU Extension has the authority to execute Jefferson County 4-H Judging Agreements.

2) Reservation Agreements: The Director of CSU Extension has the authority to execute Reservation Agreements for the rental of CSU Extension facilities.

b. Open Space: Open Space Local Park and Recreation Grant Program and Nonprofit Grant Program: The Director of Parks and Conservation has the authority to execute and/or approve reimbursements and requests for payments through the Local Park and Recreation Grant Program and Nonprofit Grant Program.

c. Parks

1) Short Term Licenses: The Director of Parks and Conservation has the authority to execute Licenses and Permits to authorize short term uses of Parks properties not exceeding one (1) year.

2) Park Permits: The Director of Parks and Conservation has the authority to execute Park Permits for approved special uses of Parks properties.

11. Personnel Matters

a. Unemployment: The Chairman of the Board of County Commissioners has the authority to execute Unemployment Insurance bills of whatever type.

b. Employee Severance Agreements: The Supervisor Authorized to Execute Personnel Action has the authority to approve and execute severance agreements consistent with the requirements of the Personnel Rules. County Attorney's Office approval is required.

12. Property Tax Valuation, Abatements, Refunds, and Appeals

a. Valuation and Abatement Appeals: The County Attorney has the authority to settle or compromise property valuation and abatement appeals on behalf of the Jefferson County Board of Equalization and Board of County Commissioners and execute documents related to such appeals.

b. Petitions:

1) For petitions greater than and equal to $10,000, the County Attorney has the authority to review petitions for abatement or refund and to settle and/or execute by written mutual agreement any of the petitions per tract, parcel, or lot of land or per schedule of personal property as provided by Section 39-1-113(1.5), C.R.S.

2) For petitions less than $10,000, the Assessor has the authority to review petitions for abatement or refund and to settle and/or execute by written mutual agreement any of the petitions per tract, parcel, or lot of land or per schedule of personal property as provided by Section 39-1-113(1.5), C.R.S.

13. Public Trustee Reports

a. Public Trustee Quarterly Reports: The Chairman of the Board of County Commissioners has the authority to execute the Public Trustee's Quarterly Reports following presentation to and approval by the Board of County Commissioners.

14. Public Utility Service

a. Agreements and Applications: The Director of Transportation and Engineering, Director of Facilities Management, Director of Business Innovation Technology, Director of Parks and Conservation has the authority to execute utility relocation agreements, requests for new service, requests to remove and reset street lights, frost agreements, encroachment applications, requests to de-energize, new lighting design approval, and other similar utility service agreements. (Centurylink, Xcel Energy, Public Service Company of Colorado, etc.)

15. Repairs to County Facilities and Buildings

a. Contracts: The County Manager has the authority to execute contracts or agreements for repair or clean up of county buildings or facilities when delay would cause additional damage or safety concerns. All such contracts or agreements must be appropriately approved in arrears per A.3.(A).

16. Vehicles And Equipment

a. Titles and Bills of Sale: The Deputy County Manager has the authority to execute and deliver bills of sale and automobile titles for vehicles sold at auction.

b. Used Equipment: The Director of Fleet Services has the authority to purchase previously owned or liquidated equipment acquired by auction, or other method in accordance with the Fleet Replacement Program through means other than the standard purchasing procedure, i.e. advancement of funds, procurement card, etc.

17. Volunteer Agreements

a. The Division Director has the authority to execute agreements with County volunteers.

18. Water Related Matters

a. Water Court Proceedings: The County Attorney has the authority to file or authorize the filing of statements of opposition and other water court pleadings and to litigate and settle water court proceedings involving the County, its officers, employees, agents, or entities.

b. Water Rights/ Administration Forms: The Department Director has the authority to execute forms relating to County water rights, including, but not limited to: permit application forms, registration of existing wells, change in ownership, notice of well completion forms, notice of commencement of beneficial use forms, and transfer forms.

19. Gateway to the Rockies Opioid Council (GROC)

a. The County Manager has the authority to sign all contract documents entered into by the County on behalf of GROC, following approval by GROC of all material terms of the contract document in accordance with GROC's standard operating procedures and approval as to form by the County Attorney's Office.

Agenda Item 7.11

M E M O R A N D U M

TO: Honorable Chair and Members of the Board of County Commissioners

FROM: Joe Kerby, County Manager

RE: Contract Amendment – Van Bibber Trail Project Phase 2 Construction Services (Not-to-Exceed $8,412,446) – Open Space

Date: 6/10/2025

Staff Recommendation: Whereas, the Board of County Commissioners finds that the Van Bibber Trail Project Phase 2 for trail design and construction is needed to complete the regional trail connection between Golden and Arvada communities.

NOW, THEREFORE, BE IT RESOLVED, that the Board of County Commissioners approve a contract amendment between Jefferson County and H&L Concrete, Inc. DBA Naranjo Civil Constructors, Inc. for construction services to extend a regional trail west 1.8 miles from Van Bibber Park to the Fairmount Trail. The contract duration will be twenty (20) months beginning upon issuance of Notice to Proceed, expected around June 2025, and will expire in January 2027.

Resolution No: CC25-148

Background:
On February 23, 2023, the County executed a Design-Build contract with H&L Concrete, Inc. DBA Naranjo Civil Constructors, Inc. that authorized the design phase of the project. The project includes constructing bridges over three irrigation ditches, multiple creek crossings, improved wayfinding, and at-grade crossings of two roadways to complete the regional trail connection between Golden and Arvada communities. The trails are designed to accommodate multiple visitor types while providing a safe recreation corridor through open space property. The project will also restore several areas along the corridor where the natural landscape has been altered and

damaged over years of historic misuse.

The liquidated damages amount is $8,000.00 per day for the duration of construction.

Fiscal Impact:
The project was included in the 2025-adopted Open Space budget and is included in the proposed 2026 Open Space budget as well as the proposed 2027 Open Space budget, and no new funds are being requested. The contract has a not-to-exceed $8,412,446 cost to the Open Space budget and is a capital expenditure.

BCC Briefing Presented on: 1/28/2025

Originator: Vera Braeckman, Purchasing Operations Manager, Ext. 8591

Distribution: Thomas Hoby, Parks Director
Brian Hardman, Parks Infrastructure Director
Scot Grossman, Project Management Supervisor-OS
Vera Braeckman, Purchasing Operations Manager
Anthony Chambers, Assistant County Attorney
Heather Frizzell, Finance Director

Agenda Item 7.12

M E M O R A N D U M

TO: Honorable Chairman and Members of the Board of County Commissioners

FROM: Joe Kerby, County Manager

RE: Contract for Safety Action Plan Development Consulting Services– Consor North America, Inc.–Transportation & Engineering (Not to Exceed $680,748.00) (Funding & Award Safe Streets for All)

Date: 6/10/2025

Staff Recommendation: Whereas, Jefferson County received the Safe Streets for All Grant (SS4A) for a Vision Zero Safety Action Plan. The project is focused on strengthening local approaches to roadway safety which will save lives.

Wherefore, staff recommends that the County enter into a contract with Consor North America, Inc. for the Project in an amount not to exceed $680,748.00.

NOW, THEREFORE, BE IT RESOLVED, that the Board of County Commissioners authorizes the County to enter into a contract between Jefferson County, the City of Lakewood and Consor North America, Inc. for the Project and further authorizes the Purchasing Manger to execute the contract in the final form as approved by the County Attorney. The County's Representative is Christina Lane, or another person as may be designated by the Division Director of the County Manager.

Contract duration is from issuance of Notice to Proceed through 4/6/2027.

Resolution No: CC25-150

Background: Jefferson County entered into a grant agreement funded through the Federal Infrastructure Investment and Jobs Act (IIJA) with the U.S. Department of Transportation (USDOT) for the SS4A Grant. The project will complete a Vision Zero Safety Action Plan for Jefferson County, including

Cities of Lakewood, Morrison, Golden, Wheat Ridge, Mountain View, Lakeside, and Edgewater. The funds are provided under the Bipartisan Infrastructure Law, which establishes the SS4A discretionary grant program to strengthen local approaches to roadway safety and save lives. Completion of the Safety Action Plan will allow Jeffco and participating municipalities to be eligible for future federal implementation grants.

The project is funded by an 80% federal grant/20% local match. The county entered into an Intergovernmental Agreement (IGA) with the City of Lakewood for cost sharing and the City of Lakewood agreed to provide up to $80,000 of the local match requirement for the federal grant.

To accommodate the required revisions from the Federal Highway Administration, including a multijurisdictional approach and a unified Safety Action Plan, staff requested and received an 18-month contract extension. On March 20, 2025, USDOT approved the County's request to extend the contract. The new contract end date is April 6, 2027

Fiscal Impact: Funding for services is available and approved in the 2025 budget through the Road & Bridge Fund Schedule of Expenditures of Federal Awards (SEFA) Federal Grants (FD111).

BCC Briefing Presented on: 4/8/2025

Originator: Barbra Miller, Purchasing Agent, 8592

Distribution: Abel Montoya, Development and Transportation
Mike Vanatta, Transportation and Engineering
Christina Lane, Transportation and Engineering
Vera Braeckman, Purchasing
Carey Markel, County Attorney
Heather Frizzell, Finance

Agenda Item 7.13

M E M O R A N D U M

TO: Honorable Chair and Members of the Board of County Commissioners

FROM: Joe Kerby, County Manager

RE: New Commercial Hangar Ground Lease – Kryptonite Industries, Inc. - Airport

Date: 6/10/2025

Staff Recommendation: Resolved that the Board of County Commissioners approve the new Commercial Hangar Ground Lease between Jefferson County and Kryptonite Industries, Inc.

Resolution No: CC25-151

Background: Kryptonite Industries, Inc. ("Kryptonite"), purchased a hangar from Johnson Leasing Company ("Johnson"), located at 11907 Hangar Court. The Johnson lease was established in the year 2006 and was assigned to Kryptonite effective January 6, 2025. The County and Kryptonite desire to enter into a new Commercial Hangar Ground Lease. The Lease will have a twenty-year term, and the lessee may extend the lease for one additional ten-year period.

Fiscal Impact: The new lease will result in an annual rent revenue of $29,676.35 collected in the Airport Fund.

BCC Briefing Presented on: 5/20/2025

Originator: Brandon Burns, Airport Assistant Director – Finance & Administration, Airport, x4859

Distribution:
Anthony Chambers, Assistant County Attorney, County Attorney's Office, x8942

Aimee Varghese, Paralegal, County Attorney's Office, x8958
Brandon Burns, Airport Assistant Director – Finance & Administration, Airport, x4859
Kimberly Gonzales, Business Support Supervisor, Airport, x4852

Agenda Item 7.14

M E M O R A N D U M

TO: Honorable Chair and Members of the Board of County Commissioners

FROM: Joe Kerby, County Manager

RE: 3227 Chase Street Affordable Housing

Date: 6/10/2025

Staff Recommendation:

WHEREAS, Seniors' Resource Center, Inc. (SRC) is a nonprofit corporation that provides a variety of services benefiting older citizens, including an adult day center located at 3227 and 3251 Chase Street in Wheat Ridge, where older adults can come to SRC for the day to participate in activities, various in-home services like home upkeep and caretaker respite services;

WHEREAS, the County has supported SRC at 3227 Chase Street, Wheat Ridge, Colorado (the "Property") since at least 1982, when the County first leased a portion of its building on the Property to SRC and, by a Corrected Commissioner's Deed dated April 18, 2006, recorded with the Clerk and Recorder at Reception No. 2006048674 (the "Deed"), transferred title to the Property to SRC for a nominal fee;

WHEREAS, the Deed contained a use restriction and reversionary clause stating that the Property shall be used only for a public senior services center, a county public library or for any other public purpose and that the Property would revert to the County if it were used for any other purpose (the "Reverter");

WHEREAS on January 11, 2006, SRC entered into a 99-year lease with Jefferson County Public Library for a portion of the Property (the "Lease"), which Lease was recorded with the Clerk and Recorder at Reception No. 2010074457.

WHEREAS, SRC is now considering selling or leasing the Property, or a portion

of the Property, to be developed for affordable rental housing for seniors, with 100% of the rental units restricted to senior households earning, on average, less than 60% of Area Median Income (AMI) for a period of forty years (the "Project");

WHEREAS, SRC has requested (a) confirmation that the Project would not violate the Reverter, and (b) that the County agree to subordinate the Reverter to a deed of trust to be placed on the Property at a later date securing the Project's financing (the "Deed of Trust"); and

WHEREAS, the Board of County Commissioners of Jefferson County (BCC) recognizes that given the business model utilized in the affordable housing industry, lenders which finance these projects routinely require subordination to use restrictions on the property and this Project will not be financed unless the Reverter is subordinated to the Deed of Trust; and

WHEREAS, the BCC understands that once the financing is in place there is a slight risk that the Deed of Trust will be foreclosed, which may then extinguish the Reverter; and

WHEREAS, the BCC believes that given the tax credits with which the Project will likely be financed and the level of experience of the developer with whom SRC hopes to partner, the chance that the Deed of Trust will be foreclosed is quite minimal; and

WHEREAS, the BCC sees a very strong need for senior affordable housing in the County and senior affordable housing initiatives are rare; and

WHEREAS, the BCC supports affordable housing initiatives and SRC, and very much wants to see affordable housing in this part of the County and understands that unless the Reverter is subordinated to the Deed of Trust, the Project will not go forward.

NOW, THEREFORE, BE IT RESOLVED THAT the BCC finds that the Project would not violate the Reverter and would be an acceptable use under the Deed, provided the following requirements are satisfied:

1. 100% of the rental units remain income-restricted for senior households earning, on average, 60% or less of AMI; and

2. The Project does not affect the Jefferson County Public Library's rights under the Lease, and that the Lease remains in full force and effect unless otherwise agreed to by the parties to the Lease; and
3. SRC supports a request to the City of Wheat Ridge that the County receive partial credit towards its Proposition 123 affordable housing commitment due to the County's transfer of the Property to SRC for public purposes; and

NOW THEREFORE, the BCC 1) authorizes the Chair of the Board to execute a document which subordinates the Reverter to a financing Deed of Trust and any documents related to such Subordination; and 2) authorizes the County Attorney's Office to cause the Subordination and any related documents to be recorded in the Jefferson County Clerk and Recorder's Office; and

BE IT FURTHER RESOLVED that if any portion of the Property ceases to be put to an acceptable public purpose use under the Deed at any time, the owner of the Property may request that the County release the Reverter as to that portion of the Property in exchange for a monetary payment. The BCC will determine the payment required to release the Reverter as to the affected portion of the Property, such that the County is fully and adequately compensated for its original investment in the affected portion of the Property, and upon payment of that sum, the County will release the Reverter as to the affected portion of the Property. If the Reverter is not released as to the affected portion of the Property, ownership of the Property will revert to the County in accordance with the terms of the Reverter.

BE IT FURTHER RESOLVED that the BCC finds that this Resolution affects title to the Property and will therefore be recorded in the Jefferson County Clerk and Recorder's Office.

BE IT FURTHER RESOLVED that the Chair of the BCC or, in the absence of the Chair, any other member of the BCC, is authorized to execute and deliver any instruments and to take any actions as are required to carry out and give effect to this Resolution.

Resolution No: CC25-152

Background:

In 1979, the County purchased 3227 Chase Street for approximately

$75,000 from Jefferson County Public Schools. The property had an existing building on it, which had been used as an elementary school previously. Beginning in 1982, the County leased the East Wing of this building to Senior Resource Center ("SRC") to use as a senior services center, and the West Wing of the building to the Jefferson County Public Library to use as their Wheat Ridge Library facility. This continued for the next 20+ years.

In 2004, SRC purchased 3251 Chase Street, the lot immediately to the north of 3227 Chase Street. In or around 2005, SRC approached the County for assistance with a proposed expansion of their facility to meet their growing needs. SRC wanted to build a new facility covering both the 3227 and 3251 lots and, in order to secure financing for the construction, SRC needed to own the 3227 Chase Street property outright. In early 2006, the County agreed to deed the 3227 Chase Street property (estimated value of $1,495,050) to SRC for the nominal sum of $10.00.

The deed, which is the Corrected Commissioner's Deed dated April 18, 2006, contained a use restriction and reversionary clause stating that: "The property herein quitclaimed shall be used only for a public senior services center, a county public library or for any other public purpose. In the event that the property is used for any other purpose, then the property shall revert to the County and this deed shall be null and void."

Upon execution of the commissioner's deed, SRC entered into a 99-year, zero-dollar lease with Jefferson County Public Library to lease the library of about 6500 square feet of the building to continue to serve as its Wheat Ridge library location (the library has a different address – 5475 West 32nd Avenue – but is in the same building). This lease is still in effect for another 78 years.

SRC is considering selling or leasing the property for affordable housing purposes. SRC sent a letter to the County on January 21, 2025 and briefed the BCC on February 25, 2025, describing its affordable housing proposal to include the following

- That SRC is hoping to partner with an experienced affordable housing developer who will build a new apartment building on the property.
- That 100% of the apartment units would be income-restricted for senior households earning an average of 60% of AMI.
- That SRC expects these affordability restrictions to be in place for 40 years.

- SRC also confirmed that their planned development would not interfere with the library's rights under its 99-year lease and that, if the property were sold, SRC would require the buyer to honor the library's rights.
- That SRC would work with our county community development office on a couple items that they requested, including supporting a request to the City of Wheat Ridge that the County receive partial credit towards its Prop 123 housing commitments.

SRC requests a letter or resolution from the BCC to clarify that affordable housing that includes the above elements meets the public purpose intent and does not trigger the reversionary clause in the deed and also requests that the Board approve a Subordination of the Reverter to the Deed of Trust which encumbers the Property for purposes of financing the project.

Fiscal Impact: None

BCC Briefing Presented on: 2/25/2025

Originator: Kate Newman

Distribution: Jean Biondi, Kym Sorrells

CASE SUMMARY

CASE SUMMARY

Consent Agenda

PC Hearing Date: May 14, 2025

BCC Hearing Date: June 10, 2025

24-133066RZ Rezoning

Case Name: South Golden Road / Mt. Vernon Mixed-Use ODP Amendment

Owner/Applicant: Petrified Tree, LLC, a Colorado limited liability company, & Talk to the Hand, LLC, a Colorado limited liability company

Location: 16121 W 10th Ave, 16129 W 10th Ave, 16005 Mt Vernon Rd, and 16100 S Golden Rd, Golden
Section 1, Township 4 South, Range 70 West

Approximate Area: 5.87 Acres

Purpose: Rezone from Planned Development (PD) to a new Planned Development to amend the existing South Golden Road / Mt. Vernon Mixed-Use Official Development Plan zone district boundary which allows a mixed-use project with ground-floor retail and up to 200 multi-family residential dwelling units above, and to preserve the Rock Rest Lodge.

Case Manager: Sara Homeyer

Representative: Joel Weikert, Ripley Design, Inc.

Issues:
- None

Recommendations:
- **Staff:** Recommends APPROVAL

Interested Parties:
- None

Level of Community Interest: Low

General Location: Southwest of the intersection of S Golden Road and Mt Vernon Road. North of the intersection of Mt Vernon Road and W 10th Avenue.

Case Manager Information: Phone: 303-271-8732 e-mail: shomeyer@jeffco.us

PC RESOLUTION

It was moved by Commissioner **Liles** that the following Resolution be adopted:

BEFORE THE PLANNING COMMISSION
COUNTY OF JEFFERSON
STATE OF COLORADO

May 14, 2025

RESOLUTION

24-133066RZ	Rezoning
Case Name:	South Golden Road / Mt. Vernon Mixed-Use ODP Amendment
Owner/Applicant:	Petrified Tree, LLC, a Colorado limited liability company, & Talk to the Hand, LLC, a Colorado limited liability company
Location:	16121 W 10th Ave, 16129 W 10th Ave, 16005 Mt Vernon Rd, and 16100 S Golden Rd, Golden Section 1, Township 4 South, Range 70 West
Approximate Area:	5.87 Acres
Purpose:	**Rezone from Planned Development (PD) to a new Planned Development to amend the existing South Golden Road / Mt. Vernon Mixed-Use Official Development Plan zone district boundary which allows a mixed-use project with ground-floor retail and up to 200 multi-family residential dwelling units above, and to preserve the Rock Rest Lodge.**
Case Manager:	Sara Homeyer

The Jefferson County Planning Commission hereby recommends **APPROVAL**, of the above application, on the basis of the following facts:

1. That the factors upon which this decision is based include evidence and testimony and staff findings presented in this case.

2. The Planning Commission finds that:
   A. The Rezoning to incorporate an additional property into the Planned Development boundary for a mixed-use project with ground-floor retail, office and service uses, and up to 200 multi-family

residential dwelling units above, and to preserve the Rock Rest Lodge, is compatible with the existing and allowable commercial and residential land uses in the surrounding South Golden Road Corridor area.

B. The proposal is in general conformance with the Comprehensive Master Plan (Plan). The Plan recommends mixed-use buildings, and the Rezoning would allow for a mixed-use building and preservation of the existing Rock Rest Lodge. The proposal meets the Plan's land use recommendation, and all other applicable sections of the Plan goals and policies are met.

C. The ability to mitigate the negative impacts of the proposed land use upon the surrounding area has been considered and found to be adequately addressed under the existing zoning.

D. The subject property is served by Pleasant View Metropolitan District Fire Department and the Jefferson County Sheriff's Office. Water and wastewater services will be provided by Consolidated Mutual Water and Pleasant View Sanitation District. Services are available and adequate to service the property.

E. The proposed land use will not result in significant impacts to the health, safety, and welfare of the residents and landowners in the surrounding area.

Commissioner **Spencer** seconded the adoption of the foregoing Resolution, and upon a vote of the Planning Commission as follows:

Commissioner	**Rogers**	**aye**
Commissioner	**Spencer**	**aye**
Commissioner	**Becker**	**aye**
Commissioner	**Bolin**	**aye**
Commissioner	**Liles**	**aye**
Commissioner	**Messner**	**aye**
Commissioner	**LaRocque**	**aye**

The Resolution was adopted by **unanimous** vote of the Planning Commission of the County of Jefferson, State of Colorado.

I, Kimi Schillinger, Executive Secretary for the Jefferson County Planning Commission, do hereby certify that the foregoing is a true copy of a Resolution duly adopted by the Jefferson County Planning Commission at a regular hearing held in Jefferson County, Colorado, May 14, 2025.

Kimi Schillinger
Executive Secretary

STAFF REPORT

Staff Report Summary

JEFFERSON COUNTY COLORADO
Planning and Zoning

100 Jefferson County Parkway,
Suite 3550, Golden, CO 80419
303-271-8700
planning.jeffco.us | pzweb@jeffco.us

Case Number:
24-133066RZ

Summary of Process

- *The Staff evaluation of an application will be presented at the required Planning Commission and Board of County Commissioners' Hearings.*
- *The Planning Commission will review the evidence and will make a recommendation to the Board of County Commissioners.*
- *The final decision on the request will be made by the Board of County Commissioners.*

Case Summary

Rezone to amend the existing South Golden Road / Mt. Vernon Mixed-Use Official Development Plan zone district boundary.

Purpose

South Golden Road / Mt. Vernon Mixed-Use ODP Amendment One	Sara Homeyer	March 6, 2025
Case Name	*Case Manager*	*Formal Submittal Date*

Waived	February 5, 2025	May 28, 2025	June 11, 2025	Site Development Plan
Pre-Application Date →	*Community Meeting Date* →	*PC Hearing Date* →	*BCC Hearing Date* →	*Next Process*

Joel Weikert, Ripley Design, Inc. (Representative)	Petrified Tree, LLC, and Talk to the Hand, LLC
Applicant/Representative, check if same as owner: ☐	*Owner*

16121 W 10th Ave	Golden	80401	5.87 acres	1	4 South	70 West
Property Address	*City*	*Zip*	*Area ≈*	*Section*	*Township*	*Range*

40-012-17-173	Southwest of the intersection of S Golden Rd and Mt Vernon Rd. North of the intersection of Mt Vernon Rd and W 10th Ave.
Pin	*General Location*

Land Use and Zoning

Vicinity

Detail

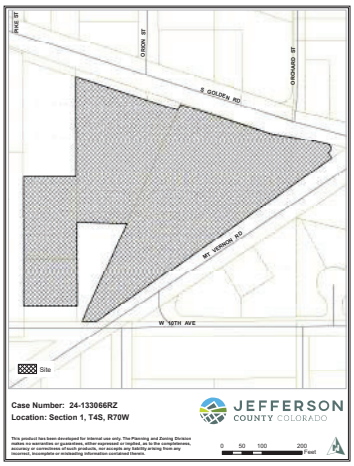

Surrounding Zoning

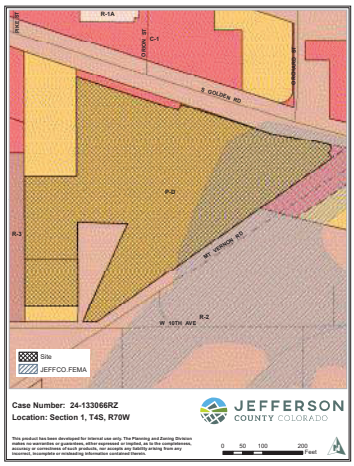

Existing Land Use:	*Existing Zoning:*	*CMP Recommended Land Use:*	*Requested Zoning:*
Single-family residential	Planned Development (PD)	Neighborhood commercial, mixed-use buildings	Planned Development (PD)

Plan Area: Central Plains

Number of citizens at Community Meetings: 2

PC Recommendations: Approval

Level of Community Interest: Low

Key Issues: None

Criteria for Rezoning:

	✓	○	✗
a. The compatibility with existing and allowable land uses in the surrounding area.	☒	☐	☐
b. The degree of conformance with applicable land use plans.	☒	☐	☐
c. The ability to mitigate negative impacts upon the surrounding area.	☒	☐	☐
d. The availability of infrastructure and services.	☒	☐	☐
e. The effect upon the health, safety, and welfare of the residents and landowners in the surrounding area.	☒	☐	☐

1. SUBJECT REQUEST

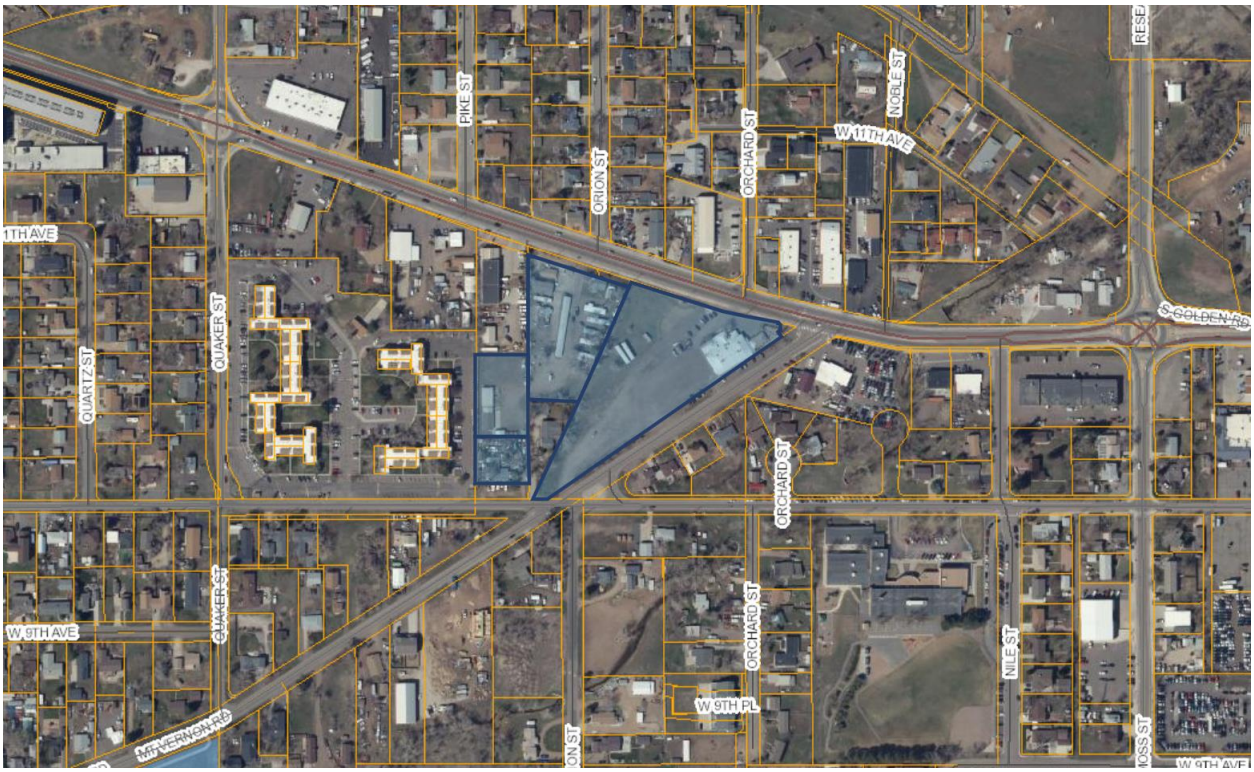

Figure 1: Location of subject property.

The applicant is requesting to Rezone to amend the existing South Golden Road / Mt. Vernon Mixed-Use Official Development Plan (ODP) zone district boundary. The previous ODP was approved by the Board of County Commissioners in July 2024 (Recording number 2024061058).

The proposed Planned Development would be governed by the South Golden Road / Mt. Vernon Mixed-Use ODP Amendment One. The ODP includes two Planning Areas: the first to allow mixed-use development with ground-floor retail and up to 200 multi-family residential units on the upper levels, and the second to allow restaurant and tavern uses primarily to preserve the ongoing use of the Rock Rest Lodge.

The only modifications to the ODP since the previous approval are as follows: the boundary expansion to include 16121 W 10th Avenue, the addition of a 25-foot eastern setback for Planning Area 1, and the note that "parking shall be provided as presented below unless state law or statutes allow for reduced parking." The maximum number of residential units and limit on commercial space remain the same.

2. CONTEXT

The subject property is in central Jefferson County and is made up of four parcels. It is located southwest of the intersection of S Golden Road and Mount Vernon Road, and north of the intersection of Mount Vernon Road and W 10th Avenue. This property is adjacent to brewery, commercial, auto service, and single-family residential uses to the north. It is adjacent to single-family residential uses to the south, single-family residential and auto service uses to the east, and multi-family and single-family residential and commercial retail uses to the west. The lots to the north are zoned Commercial – One (C-1), Planned Development (PD) as the Barrels and Bottles ODP, and Residential – Two (R-2). The lots to

the south and east are zoned Planned Development (PD) as the Golden Properties ODP and Residential – Two (R-2). The lots to the west are zoned Residential – Two (R-2) and Residential – Three (R-3). This area is characterized by a mix of residential and commercial land uses.

The South Golden Road Corridor is intended to become a hub for research and development, primarily due to the National Renewable Energy Laboratory (NREL) and existing commercial activity, and it currently provides employment and services for the surrounding area. This Corridor is also home to a former low-security federal prison and several State of Colorado agency offices. Currently, commercial uses along South Golden Road cater to primarily auto-oriented needs like repair shops, and a car dealership. There are also several bars, restaurants, and tap rooms in this area, some of which are long-standing staples of the community while others are new additions. The Corridor is currently undergoing a period of change with several recently approved or ongoing development applications along the roughly mile-long stretch of South Golden Road and its peripheries.

There are a variety of existing structures on the property. In Planning Area 2, the Rock Rest Lodge was built in 1910 according to the Jefferson County Assessor, with zoning that went into effect in 1983. In Planning Area 1, there is a mobile home park with structures built in 1926, 1940, 1941, and 1949 according to the Jefferson County Assessor, with C-1 zoning that went into effect in 1946 and 1955 and R-2 zoning that went into effect in 1941, as well as a warehouse/garage that was built in 1990 according to the Jefferson County Assessor, with PD zoning that went into effect in 1991.

This Rezoning has been requested to amend the existing ODP to expand the zone district boundary. The new parcel being added to the ODP has a single-family dwelling that was built in 1955 according to the Jefferson County Assessor, with PD zoning that went into effect in 1991.

Figure 2: Location of new parcel to be included in the zone district boundary.

3. SURROUNDING ZONING/LAND USE

	Adjacent Zoning	Land Use
North:	Commercial – One (C-1), Planned Development (PD), Residential – One (R-1)	Brewery, Auto Service, Commercial Retail, Single-Family Residential
South:	Residential – Two (R-2)	Single-Family Residential
East:	Planned Development (PD), Residential – Two (R-2)	Auto Service, Single-Family Residential
West:	Residential – Three (R-3), Residential – Two (R-2)	Multi-Family Residential, Single-Family Residential, Commercial Retail

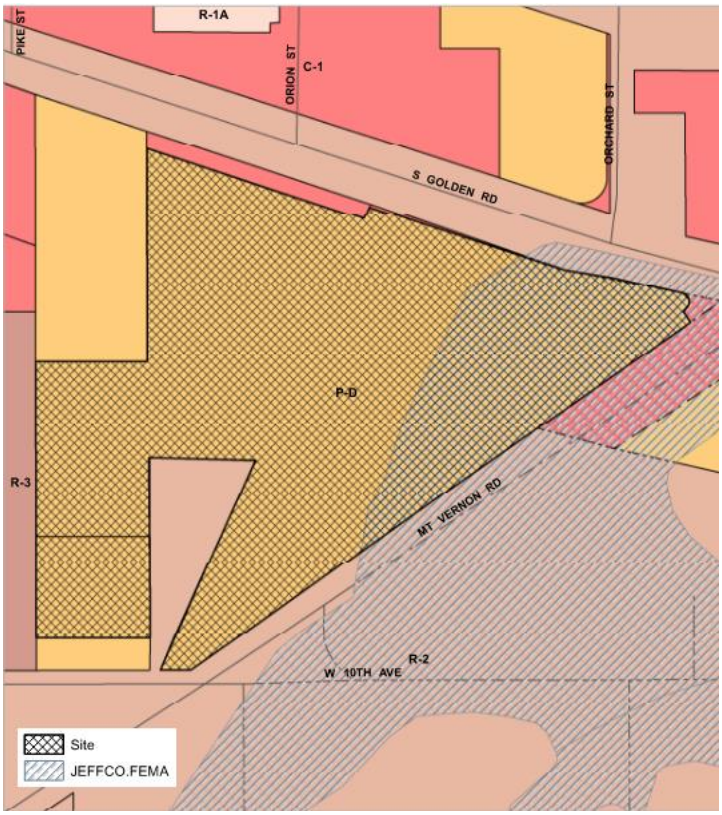

Figure 3: Zoning map of subject property and surrounding area with floodplain designation.

4. SUMMARY OF PROPOSED CHANGES

	Current Zoning for 16121 W 10th Ave (Planned Development – Bettinger ODP)	Proposed Zoning (South Golden Road / Mt. Vernon Mixed-Use ODP Amendment One)
Uses	Use Area 1: one single-family dwelling and residential accessory uses.	**Primary Uses:** Multi-Family Dwellings, Townhomes, General Retail, Business and Professional Office, Service Establishment Building(s) shall be Mixed-Use, with ground floor Commercial facing South Golden Road; maximum Commercial GLA is 8,400

		sf. Remaining ground floor area may be used for residential dwellings and/or uses that support Multi-Family Residential. Maximum of 200 dwelling units. **Accessory Uses:** Private Garage, Mini Structure, Storage Shed, Existing Stone Arch
Setbacks	Front: 20 feet Rear: 20 feet Side: 10 feet	**Primary Structures:** North PD Boundary: 25 feet West PD Boundary: 25 feet South PD Boundary: 25 feet East PD Boundary: 25 feet **Accessory Structures:** North PD Boundary: 40 feet West PD Boundary: 10 feet South PD Boundary: 10 feet East PD Boundary: 40 feet
Lot Size	Minimum of 12,500 sf	No minimum lot size
Height	Residential structures: 35 feet Accessory structures and storage buildings: 20 feet	Principal buildings: 75 feet Within transitional height setback: 35 feet *Adjacent to R-2 Zone District:* transitional height setback required 75 feet from PD Boundary
Parking	Minimum of two on-site parking spaces for each dwelling unit.	**Residential:** Studio Units: 1 parking space/unit One Bedroom Units: 1.25 spaces/unit Two Bedroom Units: 2 spaces/unit Three Bedroom Units or Larger: 2.5 spaces/unit Guest Parking: 0.25 spaces/unit **Commercial:** General Retail: 4 spaces/1,000 sf GFA Business/Professional Office: 4 spaces/1,000 sf GFA Service Establishment: 4 spaces/1,000 sf GFA Motorcycle: standard vehicular parking spaces may be substituted for motorcycle parking stalls as long as the total motorcycle parking does not exceed more than 7% of total spaces provided on site Shared vehicular parking may be proposed.

		On-street parking along the Eastern PD Boundary may count toward parking requirements.
Architecture	All buildings shall be residential in scale, character, and finish. All buildings must have sloped gable-style roofs and painted or stained siding on the walls.	– Greater building mass reduction through variation in horizontal façade, massive materials on the lower portion of the building, and a variety of step backs – Exterior wall finish materials and colors that resemble or are natural materials – 360-degree architecture – Emphasis on ground floor transparency, building articulation for human-scale architecture, and additional horizontal façade features for visual interest with mixed-use building(s)

Changes to existing South Golden Road / Mt. Vernon Mixed-Use Official Development Plan:

	Current Zoning (South Golden Road / Mt. Vernon Mixed-Use ODP)	**Proposed Zoning (South Golden Road / Mt. Vernon Mixed-Use ODP Amendment One)**
Zone District Boundary	**Includes three parcels:** 16129 W 10th Avenue 16005 Mt. Vernon Road 16100 S Golden Road	**Includes four parcels:** 16121 W 10th Avenue 16129 W 10th Avenue 16005 Mt. Vernon Road 16100 S Golden Road
Setbacks	**Planning Area #1 Primary Structures:** North PD Boundary: 25 feet West PD Boundary: 25 feet South PD Boundary: 25 feet From any principal building in Planning Area #2: 50 feet	**Same requirements, with added Primary Area #1 Primary Structures setback:** East PD Boundary: 25 feet
Parking	**Residential:** Studio Units: 1 parking space/unit One Bedroom Units: 1.25 spaces/unit Two Bedroom Units: 2 spaces/unit Three Bedroom Units or Larger: 2.5 spaces/unit Guest Parking: 0.25 spaces/unit **Commercial:** Existing Commercial (Rock Rest Lodge): 10 spaces/1,000 sf GFA General Retail: 4 spaces/1,000 sf GFA Business/Professional Office: 4 spaces/1,000 sf GFA	**Same requirements, with added note:** Parking shall be provided as presented below unless state law or statutes allow for reduced parking.

	Service Establishment: 4 spaces/1,000 sf GFA Motorcycle: standard vehicular parking spaces may be substituted for motorcycle parking stalls as long as the total motorcycle parking does not exceed more than 7% of total spaces provided on site Shared vehicular parking may be proposed. On-street parking along the Eastern PD Boundary may count toward parking requirements.	

5. TRANSPORTATION

The proposed Rezoning to include the additional parcel to the existing ODP zone district boundary is not anticipated to have additional impacts to the existing transportation network, as there are no changes to the maximum number of allowed dwelling units or the maximum commercial square-footage for the ODP.

Access to this property is from Mount Vernon Road, S Golden Road, and W 10th Avenue, which are paved County-maintained streets. Staff determined that the transportation study from the previously approved ODP and its findings were adequate for the purpose of this Rezoning application and analysis. A revised transportation study for the final development will be required with the Site Development Plan (SDP) application, if this Rezoning is approved.

Staff finds that the parking ratios, which have not changed since the previous approval of the ODP, will provide sufficient off-street parking for these uses due to existing infrastructure and multi-modal options on South Golden Road.

6. CRITERIA FOR DECISIONS FOR PLANNED DEVELOPMENT REZONING APPLICATIONS

Section 6 of the Zoning Resolution states, *In reviewing Rezoning and Special Use applications, the Planning Commission and the Board of County Commissioners may consider the following criteria:*

- ✓ *a. The compatibility with existing and allowable land uses in the surrounding area.*
- ✓ *b. The degree of conformance with applicable land use plans.*
- ✓ *c. The ability to mitigate negative impacts upon the surrounding area.*
- ✓ *d. The availability of infrastructure and services.*
- ✓ *e. The effect upon the health, safety, and welfare of the residents and landowners in the surrounding area.*

a. The compatibility with existing and allowable land uses in the surrounding area.

This rezoning does not provide for any land uses not already allowed under the existing South Golden Road / Mt. Vernon Mixed-Use ODP.

The proposed mixed-use development with commercial and residential uses is compatible with the existing and allowable land uses in the area. The existing ODP pairs well with existing residential and commercial uses surrounding the subject property. The allowed uses in the ODP are restricted to prohibit more intensive land uses, and the proposed revisions do not change that. The CMP identifies the South Golden Road Corridor as an area that should provide employment and services to surrounding residential neighborhoods, especially jobs in the research and development industries. The Community Level of C-1 zoning and comparable PD zone districts along the length of South Golden Road allow for intense land uses such as gas stations and restaurants. These factors ensure this development's compatibility with allowable land uses, and no new land uses would be allowed with this rezoning.

b. The degree of conformance with applicable land use plans.

The Comprehensive Master Plan (CMP), an advisory document required by State statute, contains Goals and Policies that are used to guide land use decisions. The Area Plans section of the CMP contains supplementary policies and land use recommendations for evaluation.

	Summary	**Conforms with CMP?** ✓ ○ ✗
Land Use	The CMP discusses the need for a variety of uses to create a vibrant, enduring community. The Plan encourages diverse communities in which to live, work, and enjoy outdoor recreation.	✓
Physical Constraints	The CMP describes physical constraints as those physical features that due to safety concerns may potentially restrict where and how development occurs. Physical Constraints include geologic hazards and constraints, floodplains, wetlands, wildfire, radiation, landfills, abandoned mines, and wildlife habitat	✓
Community Resources	The CMP contains policies that relate to historic structures or sites, scenic corridors, natural features, air quality, light, odor and noise pollution, open space and trails.	✓
Infrastructure Water and Services	The CMP describes the importance of new developments having adequate Transportation, Water and Wastewater, and Services.	✓

Staff concludes that the subject request is in general conformance with the applicable goals and policies of the Comprehensive Master Plan (CMP).

Land Use: The subject property is located in Area 2 of the South Golden Road Corridor Area of the Central Plains Area Plan. The CMP recommends neighborhood commercial, research & development, light industrial, and mixed-use buildings for the subject area. The Central Plains Area Plan advocates for the revitalization of the unincorporated portion of the South Golden Road Corridor in a way that provides employment opportunities and services for nearby communities. Land use policies of the CMP also discuss the need to mitigate potential impacts of development, even if the use is recommended on a property. Since the existing South Golden Road / Mt. Vernon Mixed-Use ODP would allow a mixed-use development while addressing impacts through written restrictions, staff finds that this Rezoning application is in conformance with the land use recommendations of the CMP. The proposal also meets CMP goals related to infill development and redevelopment. This proposal is in conformance with the recommendation within the CMP.

Physical Constraints: The CMP describes physical constraints as those physical features that due to safety concerns may potentially restrict where and how development occurs. There are no geologic hazards on the property. A portion of the property in the existing South Golden Road / Mt. Vernon Mixed-Use ODP is within the FEMA 100-year floodplain. Any structures placed on this property would need to first obtain a floodplain permit through the Planning and Zoning office. This property is within a Maximum Wildlife Quality Area. If the Rezoning is approved, an SDP for this property would be required. Through that process, the applicant should work with CPW and US Fish & Wildlife Service to ensure that impacts to the native wildlife can be properly mitigated where necessary. Therefore, the request is consistent with the Physical Constraints goals and policies of the CMP.

Community Resources: The Community Resources section contains policies that relate to historic structures or sites, scenic corridors, natural features, air quality, light, odor and noise pollution, open space and trails. There are no historic resources identified on this property on the Historic Resources map. However, the Jefferson County Assessor does identify structures on the property that are more than 50 years old and therefore may be eligible for identification as a local, state, and/or national landmark. The applicant has worked with the Jefferson County Historical Commission (JCHC) during the referral process and will be preserving the Rock Rest Lodge. If the Rezoning is approved, JCHC would be sent the SDP at the time of referral.

Air, light, odor, visual, and noise impacts of this proposal on adjacent properties are expected to be minimal. Therefore, the request is consistent with the Community Resources goals and policies of the CMP.

Infrastructure, Water and Services: Existing infrastructure and services are available and adequate to support the uses proposed by this Rezoning. The existing access streets are maintained by the County. The property is within the Pleasant View Metropolitan District Fire Department and the Jefferson County Sheriff's Office provides law enforcement to the area. Water and wastewater services are provided by Consolidated Mutual Water and Pleasant View Sanitation District. The applicable agencies have reviewed the proposed zoning and there are no unmitigated concerns. Therefore, the request is consistent with the Infrastructure, Water and Services goals and policies of the CMP.

c. The ability to mitigate negative impacts upon the surrounding area.

Staff identified no potential negative impacts on the surrounding area with the proposed addition of the new parcel in the existing South Golden Road / Mt. Vernon Mixed-Use ODP. The only modifications to the ODP since the previous approval are as follows: the boundary expansion to include 16121 W 10th Avenue, the addition of a 25-foot eastern setback for Planning Area 1, and the note that "parking shall be provided as presented below unless state law or statutes allow for reduced parking." The maximum

number of residential units and limit on commercial space remain the same, and no new uses would be allowed.

The combination of standards in the existing ODP adequately mitigates the potential negative visual impacts of development on the subject property. The existing ODP addresses building massing and visual impacts through high quality architectural requirements, such as building step backs and a transitional height setback, as well as landscape screening and communal amenities, all of which go beyond the standards of the ZR.

Negative impacts of the proposed land use upon the surrounding area have been considered and found to be adequately addressed under the existing zoning.

d. The availability of infrastructure and services.

The existing infrastructure and services are available and adequate to support the proposed Rezoning, as stated above.

e. The effect upon health, safety, and welfare of the residents and landowners in the surrounding area.

The proposed land uses will not result in significant impacts to the health, safety, and welfare of the residents and landowners in the surrounding area. No unmitigated negative effects relating to the proposed Rezoning have been identified.

7. COMMERCIAL MINERAL DEPOSITS

No known commercial mineral deposits exist on the subject property.

8. COMMUNITY MEETING

A Community Meeting was held on February 5, 2025. There were 2 community members in attendance. The general tone of the meeting was of curiosity. Questions presented by community members during the meeting related to the plans for the parcel at 16121 W 10th Avenue and the timeline for development. Please see the Community Meeting Summary included in this case packet for more details.

9. COMMUNITY/REFERRAL RESPONSES

During the processing of this Rezoning application, Staff received no community response regarding this proposal. Staff has not identified unresolved citizen comments.

10. AGENCY REFERRAL RESPONSES

This application was sent on referral to 10 Jefferson County Departments & Divisions, 14 external agencies, and 9 registered associations (please see the HOA mailing list in the case packet for more information). The request was sent on two referrals which both resulted in modifications to the proposed written restrictions related to permitted uses and lot and building standards. There are no known outstanding issues with the referral agencies.

11. NOTIFICATION

Notification of the proposed development was sent and posted in accordance with the Zoning Resolution. Please see the attached Notification Summary for more information.

12. POST HEARING REVIEW

If the Rezoning is approved, the post hearing review shall be in accordance with the Zoning Resolution as follows:

The applicant shall have 28 days after Board of County Commissioner's approval to submit a 'clean' copy of the approved red-marked ODP and pay the recordation fees. The Case Manager will have 7 days to review the submitted ODP. If the revisions have been made in accordance with the approval conditions, Staff will affirm and record the ODP documents, as appropriate. If the submitted documents are not in conformance with the approved red-marked ODP, the red-marked ODP shall be recorded.

13. SUBSEQUENT PROCESSES

If the Rezoning is approved, prior to construction of any other buildings on the site a Site Development Plan (SDP) would be required. Building Permits would be required after SDP approval. During these processes, the SDP would be sent on referral to numerous internal and external agencies. The SDP and Building Permit applications are processes that will ensure compliance with all of the County's development regulations.

SUMMARY OF STAFF ANALYSIS

Staff's analysis concludes that the proposed Rezoning is in conformance with specific land use goals and policies outlined within the CMP and therefore meets the land use recommendations of the CMP. Potential negative impacts to the surrounding area have been adequately addressed using development standards in the ODP, and infrastructure and services are adequate and available to support the proposed uses. Staff has no unresolved issues related to this Rezoning application and staff recommends APPROVAL of the Rezoning request.

FINDINGS:

Based on the analysis included in this report, staff concludes that the proposal satisfactorily addresses each of the criteria below which the Board of County Commissioners may consider, as detailed in subsection 6 in this staff report.

1. **The Rezoning to incorporate an additional property into the Planned Development boundary for a mixed-use project with ground-floor retail, office and service uses, and up to 200 multi-family residential dwelling units above, and to preserve the Rock Rest Lodge, is compatible with the existing and allowable commercial and residential land uses in the surrounding South Golden Road Corridor area.**

2. **The proposal is in general conformance with the Comprehensive Master Plan (Plan). The Plan recommends mixed-use buildings, and the Rezoning would allow for a mixed-use building and preservation of the existing Rock Rest Lodge. The proposal meets the Plan's land use recommendation, and all other applicable sections of the Plan goals and policies are met.**

3. **The ability to mitigate the negative impacts of the proposed land use upon the surrounding area has been considered and found to be adequately addressed under the existing zoning.**

4. **The subject property is served by Pleasant View Metropolitan District Fire Department and the Jefferson County Sheriff's Office. Water and wastewater services will be provided by Consolidated Mutual Water and Pleasant View Sanitation District. Services are available and adequate to service the property.**

5. **The proposed land use will not result in significant impacts to the health, safety, and welfare of the residents and landowners in the surrounding area**.

PLANNING COMMISSION ACTION:

Planning Commission Recommendation (Resolution Dated May 14, 2025 Attached):

Approval	X (7-0)
Approval with Conditions	
Denial	

The case was scheduled and approved on the consent agenda of the Planning Commission hearing based upon no opposition and staff recommending approval. No citizens requested to testify for or against the application at the hybrid hearing in-person or virtually.

BOARD OF COUNTY COMMSSIONERS ACTION:

The Board of County Commissioners is charged with reviewing the request, staff report, and Planning Commission recommendation, receiving testimony and evidence on the application and recommending approval or denial of the request to the Board of County Commissioners.

COMMENTS PREPARED BY:

Sara Homeyer

Sara Homeyer
Planner
June 2, 2025

PROPOSED ZONING

SOUTH GOLDEN ROAD / MT. VERNON MIXED-USE OFFICIAL DEVELOPMENT PLAN AMENDMENT 1

A PARCEL LOCATED IN THE SW 1/4 OF THE NW 1/4 OF SECTION 1, TOWNSHIP 4 SOUTH, RANGE 70 WEST OF THE 6TH PRINCIPAL MERIDIAN, COUNTY OF JEFFERSON, STATE OF COLORADO

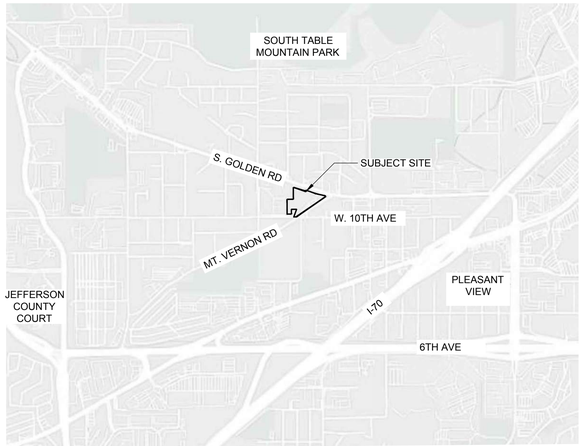

VICINITY MAP

NORTH

0 750 1500 3000
SCALE: 1"=1500'-0"

APPROVED FOR RECORDING

THIS OFFICIAL DEVELOPMENT PLAN, TITLED SOUTH GOLDEN ROAD / MT VERNON MIXED USE OFFICIAL DEVELOPMENT PLAN, WAS APPROVED

THE _____ DAY OF _____, _____. BY THE BOARD OF COUNTY COMMISSIONERS OF THE COUNTY OF JEFFERSON, STATE OF COLORADO AND IS APPROVED FOR RECORDING.

THE OWNER OF THE PROPERTY AT THE TIME OF APPROVAL WAS PETRIFIED TREE, LLC, A COLORADO LIMITED LIABILITY COMPANY AND TALK TO THE HAND, LLC, A COLORADO LIMITED LIABILITY COMPANY.

BY: JEFFERSON COUNTY PLANNING AND ZONING DIRECTOR

SIGNATURE: _____

DATE: _____

CLERK AND RECORDER'S CERTIFICATE

ACCEPTED FOR FILING IN THE OFFICE OF THE COUNTY CLERK AND RECORDER OF JEFFERSON COUNTY AT GOLDEN, COLORADO

ON THIS _____ DAY OF _____, _____.

BY: _____ _____
JEFFERSON COUNTY CLERK AND RECORDER — DEPUTY CLERK

STANDARD FLEXIBILITY STATEMENT

THE GRAPHIC DRAWINGS CONTAINED WITHIN THIS OFFICIAL DEVELOPMENT PLAN ARE INTENDED TO DEPICT GENERAL LOCATIONS AND ILLUSTRATE CONCEPTS OF THE TEXTUAL PROVISIONS OF THIS OFFICIAL DEVELOPMENT PLAN. DURING THE SITE DEVELOPMENT PLAN PROCESS THE PLANNING AND ZONING DIRECTOR MAY ALLOW MINOR VARIATIONS FOR THE PURPOSE OF ESTABLISHING:

A. FINAL ROAD ALIGNMENTS
B. FINAL CONSTRUCTION OF IMPROVEMENTS
C. FINAL BUILDING ENVELOPES
D. FINAL ACCESS AND BUILDING LOCATIONS
E. LANDSCAPE ADJUSTMENTS

APPLICABILITY STATEMENT

EXCEPT AS EXPRESSLY PROVIDED OTHERWISE IN THIS OFFICIAL DEVELOPMENT PLAN, DEVELOPMENT OF THIS PROPERTY SHALL CONFORM TO THE JEFFERSON COUNTY ZONING RESOLUTION IN EFFECT AT THE TIME OF PLATTING, SITE DEVELOPMENT PLAN, AND/OR BUILDING PERMIT APPLICATION. IN THE EVENT A STANDARD OR DEFINITION IS IN CONFLICT, THE STANDARD OR DEFINITION IN THIS OFFICIAL DEVELOPMENT PLAN SHALL GOVERN.

LEGAL DESCRIPTION (16129 WEST 10TH AVENUE)

LOT 2A, BURDICK HEIGHTS EXEMPTION SURVEY NO.1 ADJUSTMENT 1, A REVISION TO LOT 2, BURDICK HEIGHTS EXEMPTION SURVEY NO. 1, LOCATED IN THE NW 1/4 OF SECTION 1, TOWNSHIP 4 SOUTH, RANGE 70 WEST, OF THE 6TH P.M., PER THE MAP RECORDED JULY 10, 2007, AT RECEPTION NO. 2007080061, DESCRIBED AS FOLLOWS:

LOT 2, BURDICK HEIGHTS EXEMPTION SURVEY NO.1, MORE PARTICULARLY DESCRIBED AS FOLLOWS:

A PARCEL LOCATED IN THE SW 1/4 OF THE NW 1/4 SECTION 1, TOWNSHIP 4 SOUTH, RANGE 70 WEST OF THE 6TH PRINCIPAL MERIDIAN, PER MAP RECORDED JUNE 19, 1991 IN PLAT BOOK 106 AT PAGE 30 AS RECEPTION NUMBER 91053181, DESCRIBED AS FOLLOWS:

COMMENCING AT THE W 1/4 CORNER OF SAID SECTION 1, THENCE N89°58'14"E, ALONG THE SOUTH LINE OF THE NW 1/4 OF SAID SECTION 1, A DISTANCE OF 653.11 FEET; THENCE CONTINUING N89°58'14"E, A DISTANCE OF 124.65 FEET; THENCE N00°01'21"W, A DISTANCE OF 25.00 FEET TO THE SE CORNER OF LOT 1, BURDICK HEIGHTS EXEMPTION SURVEY NO. 1; THENCE N00°01'21"W, ALONG THE EAST LINE OF LOT 1, BURDICK HEIGHTS EXEMPTION SURVEY NO.1, A DISTANCE OF 127.94 FEET TO THE SE CORNER OF LOT 2, BURDICK HEIGHTS EXEMPTION SURVEY NO.1 AND THE TRUE POINT OF BEGINNING;
THENCE N00°01'21"W, ALONG THE EAST LINE OF SAID LOT 2, A DISTANCE OF 214.71 FEET TO THE NE CORNER OF SAID LOT2;
THENCE S89°59'43"W, ALONG THE NORTH LINE OF SAID LOT 2, A DISTANCE OF 124.77 FEET TO THE NW CORNER OF SAID LOT 2;
THENCE S00°02'27"E, ALONG THE WEST LINE OF SAID LOT 2, A DISTANCE OF 214.80 FEET TO THE SW CORNER OF SAID LOT 2;
THENCE N89°57'16"E, ALONG THE SOUTH LINE OF SAID LOT 2, A DISTANCE OF 124.70 FEET TO THE TRUE POINT OF BEGINNING.

TOGETHER WITH A 25 FOOT EASEMENT FOR INGRESS AND EGRESS, BEING THE WESTERLY 25 FEET OF LOT 1, BURDICK HEIGHTS EXEMPTION SURVEY NO. 1, PER THE MAP RECORDED JUNE 19, 1991 IN BOOK 106 AT PAGE 30, AS RECEPTION NUMBER 91053181
COUNTY OF JEFFERSON, STATE OF COLORADO.

LEGAL DESCRIPTION (16005 MT VERNON ROAD)

BEGINNING AT A POINT 793 FEET EAST OF THE SOUTHWEST CORNER OF THE NW 1/4 SECTION 1, TOWNSHIP 4 SOUTH, RANGE 70 WEST; THENCE 3/4THS OF A FOOT EAST; THENCE NORTHEASTERLY 706 FEET TO EAST LINE OF SW 1/4 NW 1/4 ; THENCE NORTHWESTERLY ALONG SOUTH GOLDEN ROAD 284 FEET; THENCE SOUTHWESTERLY 609 FEET TO POINT OF BEGINNING.

ALSO: COMMENCING 793 FEET EAST OF SOUTHWEST CORNER OF NW ¼, SECTION 1, TOWNSHIP 4 SOUTH, RANGE 70 WEST, THENCE NORTHEASTERLY 706 FEET TO THE EAST LINE OF SW 1/4 NW 1/4; THENCE EASTERLY ALONG SOUTH SIDE OF SOUTH GOLDEN ROAD, 171 FEET TO INTERSECTION OF MOUNT VERNON ROAD AND SOUTH GOLDEN ROAD, THENCE SOUTHWESTERLY ALONG THE NORTHWESTERLY SIDE OF MOUNT VERNON ROAD TO THE SOUTH LINE OF THE NW 1/4 OF SECTION 1; THENCE WEST 38 FEET TO PLACE OF BEGINNING. COUNTY OF JEFFERSON, STATE OF COLORADO. (REC. NO.F0316415)

EXCEPT THAT PARCEL DESCRIBED IN RECEPTION NO. 2013090817.

LEGAL DESCRIPTION (16100 SOUTH GOLDEN ROAD)

LOTS 1 AND 2, MORE CORRECTLY KNOWN AS TRACTS 1 AND 2, BURDICK HEIGHTS, EXCEPT THE NORTHERLY 20 FEET OF SAID LOTS 1 AND 2, BURDICK HEIGHTS, AND EXCEPT THAT PORTION MORE PARTICULARLY DESCRIBED AS FOLLOWS:

A TRACT OF LAND IN THE NORTHWEST QUARTER OF SECTION 1, TOWNSHIP 4 SOUTH, RANGE 70 WEST OF THE 6TH P.M., MORE PARTICULARLY DESCRIBED AS FOLLOWS:

BEGINNING AT A POINT 778.25 FEET EAST OF THE SOUTHWEST CORNER OF THE NORTHWEST QUARTER OF SECTION 1, TOWNSHIP 4 SOUTH, RANGE 70 WEST;
THENCE N0°10'W A DISTANCE OF 247.73 FEET;
THENCE S86°59'E A DISTANCE OF 124.46 FEET;
THENCE S24°23'W A DISTANCE OF 264.80 FEET TO THE SOUTH LINE OF THE NORTHWEST QUARTER OF SECTION 1;
THENCE WEST A DISTANCE OF 14.25 FEET, MORE OR LESS, ALONG THE SOUTH LINE OF THE NORTHWEST QUARTER OF SECTION 1 TO THE POINT OF BEGINNING
COUNTY OF JEFFERSON, STATE OF COLORADO.

LEGAL DESCRIPTION (16121 WEST 10TH AVENUE)

LOT 1, BURDICK HEIGHTS EXEMPTION SURVEY NO.1, MORE PARTICULARLY DESCRIBED AS FOLLOWS:

A PARCEL LOCATED IN THE SW 1/4 OF THE NW 1/4 SECTION 1, TOWNSHIP 4 SOUTH, RANGE 70 WEST OF THE 6TH PRINCIPAL MERIDIAN, PER MAP RECORDED JUNE 19, 1991 IN PLAT BOOK 106 AT PAGE 30 AS RECEPTION NUMBER 91053181, DESCRIBED AS FOLLOWS:

COMMENCING AT THE W ¼ CORNER OF SAID SECTION 1;
THENCE S 89°56'48" E ALONG THE CENTERLINE OF SAID SECTION 1 FOR A DISTANCE OF 777.73 FEET TO A #5 REBAR WITH ALUMINUM CAP STAMPED L.S. 24317;
THENCE N 00°03'12" E ALONG THE EASTERLY LINE OF SAID TRACT 3 FOR A DISTANCE OF 25.00 FEET TO A #5 REBAR WITH ALUMINUM CAP STAMPED L.S. 24317, WHICH IS THE POINT OF BEGINNING, LOT 1;
THENCE CONTINUING N 00°03'12" E, ALONG SAID EASTERLY LINE OF SAID TRACT 3 FOR A DISTANCE OF 128.00 FEET TO A POINT;
THENCE N 89°56'48" W FOR A DISTANCE OF 124.73 FEET TO A POINT ON THE WESTERLY LINE FOR A DISTANCE OF 128.00 FEET;
THENCE S 89°56'48" E A DISTANCE OF 124.73 FEET TO THE POINT OF BEGINNING, SUBJECT TO AN EASEMENT FOR INGRESS AND EGRESS OVER THE WESTERLY 25 FEET THEREOF.
SAID PARCEL CONTAINS 0.367 ACRES, MORE OR LESS.

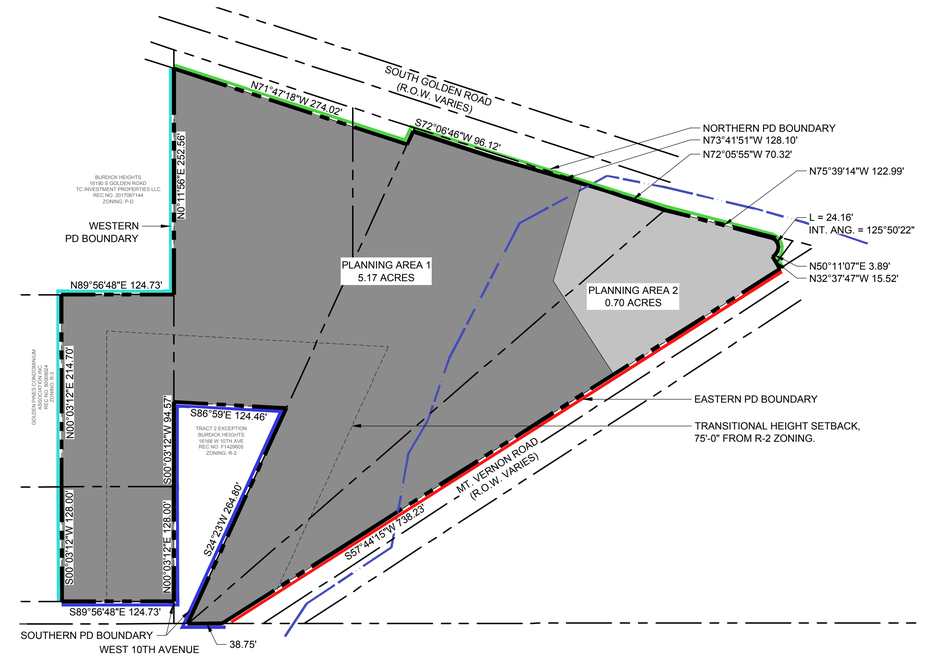

NORTH

0 40 80 160
SCALE: 1"=80'-0"

STATEMENT OF INTENT

THE PURPOSE OF THE SOUTH GOLDEN ROAD / MT VERNON ROAD MIXED USE OFFICIAL DEVELOPMENT PLAN IS TO ALLOW FOR THE CREATION OF A MIXED USE PROJECT WITH GROUND FLOOR COMMERCIAL ADJACENT TO SOUTH GOLDEN ROAD AND MULTIFAMILY RESIDENTIAL ABOVE. MULTIFAMILY RESIDENTIAL WILL ALSO BE ALLOWED ON THE GROUND FLOOR SO LONG AS IT DOES NOT FACE PUBLIC RIGHT OF WAY. THE GROUND FLOOR COMMERCIAL AND HIGH DENSITY RESIDENTIAL WILL FOLLOW THE INTENT OF THE CENTRAL PLAINS AREA PLAN AND DIRECTION FOR THIS AREA TO BE AN "ACTIVITY CENTER" ALONG THE MAJOR COLLECTOR STREET. THESE LAND USES WILL ENABLE AN EFFICIENT INFILL DEVELOPMENT THAT REDUCES SPRAWL, ADDS ADDITIONAL COMMERCIAL USES, PROVIDE HOUSING ADJACENT TO EXISTING EMPLOYMENT, AND UTILIZE EXISTING TRANSIT INFRASTRUCTURE. THE ROCK REST LODGE WILL REMAIN AS PART OF ANY DEVELOPMENT EFFORT ASSOCIATED WITH THIS OFFICIAL DEVELOPMENT PLAN.

LEGEND

- PLANNED DEVELOPMENT BOUNDARY
- EXISTING LOT LINE
- TRANSITIONAL HEIGHT SETBACK
- EXISTING 100-YEAR FLOODPLAIN

FLOODPLAIN NOTE:

1. ANY MAN-MADE CHANGE TO IMPROVED OR UNIMPROVED REAL ESTATE, INCLUDING BUT NOT LIMITED TO BUILDINGS OR OTHER STRUCTURES, MINING, DREDGING, FILLING, GRADING, PAVING, EXCAVATION OR DRILLING OPERATIONS IS NOT PERMITTED WITHIN THE 100-YEAR FLOODPLAIN UNLESS A FLOODPLAIN DEVELOPMENT DEVELOPMENT PERMIT PURSUANT TO THE FLOODPLAIN SECTION OF THE JEFFERSON COUNTY ZONING RESOLUTION IS FIRST OBTAINED.

S. GOLDEN ROAD / MT VERNON MIXED-USE

REZONING APPLICATION

JEFFERSON COUNTY, CO

PREPARED BY:

ripley design
LANDSCAPE ARCHITECTURE, LAND PLANNING
419 Canyon Ave. Suite 200 Fort Collins, CO 80521
phone 970.224.5828 | fax 970.224.6657 | www.ripleydesigninc.com

LANDSCAPE ARCHITECT | LAND PLANNER
RIPLEY DESIGN INC.
Joel Weikert
419 Canyon Ave. Suite 200
Fort Collins, CO 80521
p. 970.224.5828

OWNER | APPLICANT
PETRIFIED TREE, LLC AND TALK TO THE HAND, LLC

Phil Hodgkinson
1776 Platte St.
Denver, CO 80202
p. 970.402.8244

ARCHITECT
VFLA ARCHITECTURE + INTERIORS
Jeff Fleischer
419 Canyon Ave. Suite 200
Fort Collins, CO 80521
p. 970.224.1191

ORIGINAL SIZE 24X36

ISSUED

No.	DESCRIPTION	DATE
01	REZONE	08.10.2023
02	RESUBMITTAL	11.20.2023
03	RESUBMITTAL	03.19.2024

REVISIONS

No.	DESCRIPTION	DATE
01	REZONE AMENDMENT	02.06.2025
02	REZONE AMENDMENT	03.18.2025

OFFICIAL DEVELOPMENT PLAN

SEAL:

ENTITLEMENT DRAWINGS NOT FOR CONSTRUCTION

PROJECT No.:	R22-045.1
DRAWN BY:	JW
REVIEWED BY:	RL

DRAWING NUMBER:

1 OF 2

SOUTH GOLDEN ROAD / MT. VERNON MIXED-USE
OFFICIAL DEVELOPMENT PLAN AMENDMENT 1

A PARCEL LOCATED IN THE SW 1/4 OF THE NW 1/4 OF SECTION 1, TOWNSHIP 4 SOUTH, RANGE 70 WEST OF THE 6TH PRINCIPAL MERIDIAN, COUNTY OF JEFFERSON, STATE OF COLORADO

WRITTEN RESTRICTIONS

1. RESIDENTIAL DENSITY CAN BE NO GREATER THAN 36 DWELLING UNITS / GROSS ACRE FOR THE PLANNED DEVELOPMENT.
2. PLANNING AREA #1
   - A. PERMITTED USES
     1. MULTI-FAMILY DWELLINGS
     2. TOWNHOMES
     3. GENERAL RETAIL
     4. BUSINESS AND PROFESSIONAL OFFICE
     5. SERVICE ESTABLISHMENT
   - B. PERMITTED ACCESSORY STRUCTURES
     1. PRIVATE GARAGE, MINI STRUCTURE, STORAGE SHED, EXISTING STONE ARCH
   - C. LOT AND BUILDING STANDARDS
     1. BUILDING(S) SHALL BE MIXED-USE, WITH GROUND FLOOR COMMERCIAL FACING SOUTH GOLDEN ROAD; GROSS LEASABLE AREA FOR COMMERCIAL SHALL BE LIMITED TO 8,400 SF. THE REMAINING GROUND FLOOR AREA FACING WEST, EAST AND SOUTH TO ADJACENT PROPERTIES, MAY BE USED FOR RESIDENTIAL DWELLINGS AND/ OR USES THAT SUPPORT MULTIFAMILY RESIDENTIAL (SUCH AS LOBBY, MAIL ROOM, LEASING OFFICE, ETC.)
     2. MAXIMUM BUILDING HEIGHT: 75'-0" FOR PRINCIPAL BUILDINGS.
        - a. FLOORS ABOVE THE SECOND STORY SHALL BE STEPPED BACK A MINIMUM OF FIVE (5) FEET FROM THE FIRST TWO STORIES AND MAINTAIN THE STEP BACK (VERTICALLY) AT EACH FLOOR ABOVE THE SECOND STORY. BALCONIES AND DECKS FOR UNITS ABOVE THE SECOND FLOOR MAY ENCROACH INTO THE STEP BACK.
        - b. ANY FLOOR ABOVE 60'-0" IN HEIGHT SHALL BE STEPPED BACK A MINIMUM DEPTH OF TWENTY-FIVE (25) FEET FROM THE IMMEDIATE STORY BELOW WHEN FRONTING ALONG THE NORTHERN PD BOUNDARY, WESTERN PD BOUNDARY, OR PLANNING AREA #2 AND WHEN LOCATED AT PREDOMINANT CORNERS OF THE BUILDING'S MASSING. STEP BACK PROVIDED SHALL SPAN HORIZONTAL LENGTHS NO FEWER THAN TWENTY (20) FEET AND NO LARGER THAN EIGHTY (80) FEET IN LENGTH. THE INTENT OF THE STEP BACK IS TO REDUCE THE ARCHITECTURAL PRESENCE OF THE PRINCIPAL BUILDING FROM THE PEDESTRIAN'S VIEW, PROVIDE OPPORTUNITY FOR INTENSIVE AND EXTENSIVE GREEN ROOFS, AND PROVIDE OPPORTUNITY FOR COMMUNAL AMENITIES.
        - c. A TRANSITIONAL HEIGHT SETBACK SHALL BE PROVIDED WHERE THE PLANNED DEVELOPMENT IS ADJACENT TO R-2 ZONING. THE TRANSITIONAL HEIGHT SETBACK SHALL BE 75'-0" FROM THE P-D BOUNDARY AS SHOWN ON SHEET 1 OF THE ODP. THE MAXIMUM BUILDING HEIGHT WITHIN THE TRANSITIONAL HEIGHT SETBACK IS 35'-0".
     3. MAXIMUM NUMBER OF DWELLING UNITS: 200
     4. MINIMUM BUILDING SETBACKS
        - a. FROM THE NORTH PD BOUNDARY: 25'-0"
        - b. FROM THE EAST PD BOUNDARY: 25'-0"
        - c. FROM THE WEST PD BOUNDARY: 25-0"
        - d. FROM THE SOUTH PD BOUNDARY: 25-0"
        - e. FROM ANY PRINCIPAL BUILDING IN PLANNING AREA #2: 50'-0"
     5. MINIMUM BUILDING SETBACKS FOR ACCESSORY STRUCTURES
        - a. FROM NORTH PD BOUNDARY: 40'-0"
        - b. FROM WEST PD BOUNDARY: 10'-0"
        - c. FROM SOUTH PD BOUNDARY: 10'-0"
        - d. FROM EAST PD BOUNDARY: 40'-0"
        - e. THE EXISTING STONE ARCH, LOCATED ALONG MT VERNON ROAD, IS EXEMPT FROM THESE SETBACK STANDARDS IF RETAINED IN FUTURE DEVELOPMENT APPLICATIONS.
     6. LOT SIZE: THERE IS NO MINIMUM LOT SIZE FOR THIS PLANNING AREA.
3. PLANNING AREA #2
   - A. PERMITTED USES
     1. RESTAURANTS AND TAVERNS, EXCLUDING DRIVE- THRU AND FAST FOOD
   - B. ACCESSORY USES
     1. PRIVATE GARAGE, MINI STRUCTURE, STORAGE SHED
   - C. LOT AND BUILDING STANDARDS
     1. MAXIMUM BUILDING HEIGHT: 35'-0"
     2. MINIMUM BUILDING SETBACKS
        - a. FROM NORTH PD BOUNDARY: 25'-0"
        - b. FROM EAST PD BOUNDARY: 25'-0"
        - c. EXEMPTIONS:
          1. EXISTING DECKS AND PATIOS AT OR BELOW 2'-6" FROM THE GROUND ARE EXEMPT FROM PROPOSED SETBACK STANDARDS.
     3. LOT SIZE: THERE IS NO MINIMUM LOT SIZE FOR THIS PLANNING AREA.
4. LANDSCAPING
   - A. PERIMETER LANDSCAPING STANDARDS
     1. NORTHERN PD BOUNDARY
        - a. PERIMETER LANDSCAPE WIDTH: 20'-0"; PLANNING AREA #2 HAS NO MINIMUM WIDTH.
        - b. LANDSCAPE REQUIREMENTS:
          1. ONE (1) TREE PER 30 LINEAR FEET OF PERIMETER, EXCLUDING DRIVE AISLES.
          2. EIGHT (8) SHRUBS PER 500 SQUARE FEET OF LANDSCAPE AREA.
          3. THREE (3) ORNAMENTAL GRASSES OR LARGE PERENNIALS MAY BE SUBSTITUTED PER SHRUB, UP TO 50% OF THE REQUIREMENT.
          4. NO LESS THAN 25% OF THE TOTAL REQUIRED PLANT MATERIALS SHALL BE EVERGREEN.
     2. EASTERN PD BOUNDARY
        - a. PERIMETER LANDSCAPE WIDTH: 10'-0"; PLANNING AREA #2 HAS NO MINIMUM WIDTH.
          1. THE PERIMETER LANDSCAPE WIDTH CAN BE REDUCED TO 6'-0" WHEN A FIVE (5) FOOT TALL FENCE OR WALL IS PROVIDED IN PERIMETER LANDSCAPE AREA AND LANDSCAPE REQUIREMENTS (DETAILED IN 4.A.2.b) ARE MET.
        - b. LANDSCAPE REQUIREMENTS:
          1. ONE (1) TREE PER 30 LINEAR FEET OF PERIMETER, EXCLUDING DRIVE AISLES.
          2. EIGHT (8) SHRUBS PER 500 SQUARE FEET OF LANDSCAPE AREA.
          3. THREE (3) ORNAMENTAL GRASSES OR LARGE PERENNIALS MAY BE SUBSTITUTED PER SHRUB, UP TO 50% OF THE REQUIREMENT.
          4. NO LESS THAN 25% OF THE TOTAL REQUIRED PLANT MATERIALS SHALL BE EVERGREEN.
     3. SOUTHERN PD BOUNDARY
        - a. PERIMETER LANDSCAPE WIDTH: 10'-0"
          1. THE PERIMETER LANDSCAPE WIDTH CAN BE REDUCED TO 5'-0" WHEN A SIX (6) FOOT TALL FENCE OR WALL IS PROVIDED IN PERIMETER LANDSCAPE AREA AND LANDSCAPE REQUIREMENTS (DETAILED IN 4.A.3.b) ARE MET.
        - b. LANDSCAPE REQUIREMENTS:
          1. ONE (1) TREE PER 30 LINEAR FEET OF PERIMETER SHALL BE PROVIDED.
             - a. PERIMETER LANDSCAPE MAY BE REDUCED TO 5'-0" PROVIDED THE FOLLOWING CONDITIONS ARE MET.
               - i. ONE (1) COLUMNAR EVERGREEN TREE SHALL BE PROVIDED PER 10 LINEAR FEET OF PERIMETER; THIS ENHANCED REQUIREMENT SUPERCEDES THE ONE TREE PER 30 LINEAR FEET REQUIREMENT FOR THE CONDITION DESCRIBED.
               - ii. COLUMNAR EVERGREEN TREES SPECIFIED MUST REACH A MINIMUM HEIGHT OF 10'. COLUMNAR EVERGREEN TREES MAY INCLUDE THE FOLLOWING:
                 1. JUNIPERUS CHINENSIS CULTIVARS
                 2. JUNIPERUS SCOPULORUM CULTIVARS
                 3. PICEA ABIES CULTIVARS
                 4. PICEA PUNEGNS CULTIVARS
                 5. PINUS SPECIES
          2. EIGHT (8) SHRUBS PER 500 SQUARE FEET OF LANDSCAPE AREA.
          3. THREE (3) ORNAMENTAL GRASSES OR LARGE PERENNIALS MAY BE SUBSTITUTED PER SHRUB, UP TO 50% OF THE REQUIREMENT.
          4. NO LESS THAN 50% OF THE TOTAL REQUIRED SHRUB AND GROUND COVER PLANT MATERIALS SHALL BE EVERGREEN.
     4. WESTERN PD BOUNDARY
        - a. PERIMETER LANDSCAPE WIDTH: 10'-0"
        - B. LANDSCAPE REQUIREMENTS:
          1. ONE (1) TREE PER 30 LINEAR FEET OF PERIMETER.
          2. EIGHT (8) SHRUBS PER 500 SQUARE FEET OF LANDSCAPE AREA.
          3. THREE (3) ORNAMENTAL GRASSES OR LARGE PERENNIALS MAY BE SUBSTITUTED PER SHRUB, UP TO 50% OF THE REQUIREMENT.
          4. NO LESS THAN 25% OF THE TOTAL REQUIRED PLANT MATERIALS SHALL BE EVERGREEN.
     5. THE PERIMETER LANDSCAPING WIDTH REQUIREMENTS MAY BE SATISFIED WITH CONCRETE OR PAVER PLAZAS WHEN ABUTTING THE GROUND FLOOR OF ANY BUILDING AND ADJACENT TO PUBLIC RIGHT OF WAY. THE INTENT OF THIS EXCEPTION IS TO PROMOTE THE CREATION OF VIBRANT STREETSCAPES AND ENHANCE THE PEDESTRIAN EXPERIENCE AT THE PLANNED DEVELOPMENT. THE EXCEPTION FOR PERIMETER LANDSCAPING WIDTH SHALL NOT REDUCE THE PLANTING REQUIREMENTS FOR PD BOUNDARIES WHEN COMPARED TO A LANDSCAPE WIDTH THAT WOULD STRICTLY CONSIST OF LANDSCAPE BED; EQUIVALENT PLANT QUANTITIES SHALL BE PROVIDED.
     6. EXISTING DECKS IN PLANNING AREA #2 MAY ENCROACH INTO THE PERIMETER LANDSCAPE WIDTH.
   - B. PLAZAS AND DECKS MAY CONTAIN THE FOLLOWING AMENITIES:
     1. PATIO SEATING FOR PUBLIC USE
     2. SIDEWALKS AND ACCESSIBLE RAMPS
     3. COVERED AND UNCOVERED PORCHES
     4. FENCING AND WALLS
     5. PLANTERS CONTAINING REQUIRED STREET TREES AND SHRUBS
     6. STREET FURNITURE
     7. ORNAMENTAL SITE LIGHTING
   - C. MINIMUM LANDSCAPE COVERAGE : 20% OF THE PLANNED DEVELOPMENT
     1. AT LEAST 75% OF THE REQUIRED LANDSCAPED AREA SHALL BE COMMON USABLE AREA. COMMON USABLE AREA SHALL BE DEFINED, IN THIS PLANNED DEVELOPMENT, AS AND AREA THAT IS AVAILABLE FOR USE BY MORE THAN ONE PERSON.
     2. 40% OF THE TOTAL SF OF COMMON USABLE AREA SHALL CONSIST OF COMMUNAL AMENITIES.
        - a. PLAZAS AND AMENITY DECKS (ABOVE THE GROUND LEVEL) RECEIVE DOUBLE THE SF CREDIT TOWARD COMMUNAL AMENITIES.
        - b. COMMUNAL AMENITIES CONSISTS OF THE FOLLOWING:
          1. LAWN
          2. PLAZAS
          3. HARDSCAPE AREAS (NOT INCLUDING DRIVES AND PARKING)
          4. AMENITY SPACES
             - a. DOG PARK
             - b. ROOF DECK
             - c. COVERED ROOFTOP AMENITY
             - d. FITNESS (UNCOVERED AND COVERED)
          5. POOLS AND OTHER SIMILAR AMENITY SPACES
5. OFF-STREET PARKING
   - A. PARKING SHALL BE PROVIDED AS PRESENTED BELOW UNLESS STATE LAW OR STATUTES ALLOW FOR REDUCED PARKING.
   - B. RESIDENTIAL PARKING REQUIREMENTS (VEHICULAR)
     1. STUDIO UNITS: 1 PARKING SPACE / UNIT
     2. ONE BEDROOM UNITS: 1.25 SPACES / UNIT
     3. TWO BEDROOM UNITS: 2 SPACES / UNIT
     4. THREE BEDROOM UNITS OR LARGER: 2.5 SPACES/ UNIT
     5. GUEST PARKING: 0.25 SPACES/ UNIT
   - C. EXISTING COMMERCIAL (ROCK REST LODGE) PARKING REQUIREMENTS (VEHICULAR)
     1. TEN (10) SPACES / 1,000 SF OF GROSS FLOOR AREA
   - D. PROPOSED COMMERCIAL PARKING REQUIREMENTS (VEHICULAR)
     1. GENERAL RETAIL: 4 SPACES / 1,000 SF OF GFA
     2. BUSINESS/ PROFESSIONAL OFFICE: 4 SPACES / 1,000 SF OF GFA
     3. SERVICE ESTABLISHMENT: 4 SPACES / 1,000 SF OF GFA
   - E. MOTORCYCLE PARKING SPACES
     1. STANDARD VEHICULAR PARKING SPACES MAY BE SUBSTITUTED FOR MOTORCYCLE PARKING STALLS SO LONG AS THE TOTAL MOTORCYCLE PARKING DOES NOT EXCEED MORE THAN 7% OF THE TOTAL SPACES PROVIDED ON SITE.
   - F. VEHICULAR PARKING STALL DIMENSIONS
     1. STANDARD VEHICULAR STALL: 9'-0" W x 18'-0" L
     2. COMPACT PARKING STALL: 8'-0" W x 15'-0" L
     3. MOTORCYCLE PARKING STALL: 4'-6" W x 8'-0" L
   - G. SHARED VEHICULAR PARKING MAY BE PROPOSED AT THE SITE DEVELOPMENT PLAN APPLICATION.
   - H. ON-STREET PARKING ALONG THE EASTERN PD BOUNDARY MAY COUNT TOWARD PARKING REQUIREMENTS.
6. ARCHITECTURE
   - A. THE ARCHITECTURAL INTENT IS TO UTILIZE, AT A BASIC LEVEL, GENERAL EXTERIOR ELEVATION MATERIALS THAT ARE OF THE FOLLOWING DESCRIPTIONS AND GENERALLY BASED ON THE EXISTING BUILDING IN PLANNING AREA #2:
     1. NATURAL STONE EXTERIOR MATERIALS, WOOD AESTHETICS BOTH IN A HORIZONTAL AND VERTICAL ORIENTATION, VARIATION IN ROOF FORMS, BOTH PRIMARY AND SECONDARY, METAL ACCENTS AS PANELS AND TRIMS, ARTICULATION OF OVERALL BUILDING MASSES.
   - B. COMPATIBILITY SHALL BE ACHIEVED THROUGH ARCHITECTURAL TECHNIQUES SUCH AS VARIATION IN BOTH THE PRIMARY AND SECONDARY ROOF LINES, BUILDING MASS PROPORTION SYSTEMS THAT WORK WITH THE OVERALL DESIGN AESTHETIC, HUMAN SCALED ARCHITECTURAL FEATURES AT THE STREET LEVEL, AND BUILDING COLORS OF THAT RELATE TO THE VEGETATION AND SELECT ARCHITECTURE OF THE AREA.
   - C. THE USE OF PRIMARY EXTERIOR WALL FINISH MATERIALS THAT EITHER RESEMBLE OR ARE THE NATURAL MATERIALS SUCH AS THE FOLLOWING ARE ACCEPTABLE, BUT NOT LIMITED TO:
     1. BRICK, STONE, NATURAL STUCCO, WOOD OR WOOD-LIKE PRODUCTS THAT APPEAR NATURAL IN NATURE, STEEL, CONCRETE, TEXTURED CONCRETE, PRE-FINISHED METALS, AND PAINTED OR STAINED HORIZONTAL CEMENT BOARD.
   - D. BUILDING EXTERIORS SHALL INCORPORATE MATERIALS AS NOTED IN 6.C.1 AND COLORS THAT ARE NOTED IN SECTION 6.E.1. EXTERIOR BUILDING MATERIAL COLORS SHALL NOT BE HIGHLY REFLECTIVE OR PRIMARY IN COLOR. COLOR PALETTES SHALL BE COMPLIMENTARY WITHIN THEMSELVES AND GENERALLY RELATE TO THE AREA.
     1. PRIMARY EXTERIOR MATERIALS THAT ARE UNACCEPTABLE INCLUDE, BUT ARE NOT LIMITED TO THE FOLLOWING:
        - a. SYNTHETIC STUCCO, CONCRETE BLOCK, CONCRETE PANELS, TILT-UP CONCRETE
   - E. THE COLOR PALETTE WILL RELATE TO THE COLORS THAT ARE TYPICAL TO THE GRASSES, WOODS, ROCKS AND SOIL OF THE COLORADO FOOTHILLS AS WELL AS THE NATURAL SETTING OF JEFFERSON COUNTY. GENERALLY, THE PREDOMINATE COLORS WILL INCLUDE THE FOLLOWING:
     1. SOFT BROWNS, MUTED GRAYS, IRON GRAYS, AMBERS, MUTED GREENS AND GOLDS, BUFFS, TERRA COTTA, RUSTS, OFF WHITES/BEIGE
     2. ACCENT AND TRIM COLORS WILL COMPLIMENT THE OVERALL COLOR PALETTE OF THE NEW DEVELOPMENT
        - a. VISUALLY STRONGER, HEAVY MATERIALS WILL BE UTILIZED AT THE LOWER LEVELS OF THE BUILDING.
   - F. MAIN FLOOR DWELLING UNITS THAT FACE OUTWARD TO THE PROPERTY LINES OR TOWARDS THE STREETS WILL CONTAIN MAIN ENTRIES FROM BOTH THE EXTERIOR SIDEWALK LEVEL OF SERVICE AND FROM STRUCTURED PARKING LEVELS (IF APPLICABLE).
     1. THE ARCHITECTURAL ELEMENTS AND OVERALL FAÇADE TREATMENT WILL BE DEVELOPED TO CREATE A 360-DEGREE ARCHITECTURE CONSISTENT WITH THE OVERALL ARCHITECTURAL DESIGN AESTHETIC. ADDITIONAL TECHNIQUES MAY BE APPLIED TO MINOR PORTIONS OF THE ARCHITECTURE THAT ARE NOT DIRECTLY PART OF THE OVERALL DESIGN SUCH AS SCREENS THAT ARE BOTH HORIZONTAL OR VERTICAL IN NATURE. VERTICAL OR HORIZONTAL SUNSHADES MAY ALSO BE EMPLOYED IN THE DESIGN AESTHETIC.
     2. ENTRANCES (EXCLUDING SERVICE DOORS) INTO BUILDINGS SHALL BE IDENTIFIABLE THROUGH BUILDING DESIGN TECHNIQUES INCLUDING THE USE OF RECESSED OR PROJECTED ENTRYWAYS, DIFFERENTIATED ROOF LINES IN BOTH STYLE AND MATERIAL, AS WELL AS MATERIAL CHANGES OR COLOR SHIFTS.
     3. EXTERIOR WALL ARTICULATION IN THE PLAN OVER 60 FEET WILL CONTAIN A SURFACE PLANE SHIFT AS ADEQUATE AND RELATED TO THE OVERALL ARCHITECTURAL DESIGN AESTHETIC. GENERALLY, THESE SHIFTS WILL EMPLOY MATERIAL CHANGES AND PROJECTIONS THAT ARE RELATABLE TO EACH OTHER. THESE SHIFTS MAY INCLUDE, BUT ARE NOT LIMITED TO THE FOLLOWING:
        - a. COLUMNS, SHADING DEVICES, PILASTERS, FENESTRATION PATTERNS, RECESSES/PROJECTIONS, MATERIAL CHANGES, COLORS
     4. FACADES FACING STREETS OR CONNECTING A PEDESTRIAN LINK SHALL BE SUBDIVIDED USING FEATURES INCLUDING, BUT NOT LIMITED TO, THE FOLLOWING:
        1. WINDOWS/DOORS, ENTRANCES, RECESSES/PROJECTIONS, ARCADES, ARBORS, AWNINGS, PLANTERS, LOW SITE WALLS
     5. FIRST FLOOR FACADES RELATED TO COMMERCIAL OCCUPANCIES WILL UTILIZE GLAZING TO THE FINISHED FLOOR. SITE CONDITIONS MAY PREVAIL AND CREATE A CONDITION IN WHICH GLAZING TO THE FINISHED FLOOR MAY NOT BE ATTAINABLE.
     6. BUILDING MATERIALS SHALL CONTINUE BUT NOT BE LIMITED TO, AT A MINIMUM, SURFACE MATERIAL PLANE ALIGNMENTS VERTICALLY TO THE SECOND FLOOR OF THE OVERALL DEVELOPMENT UNLESS THE ARCHITECTURAL DESIGN AESTHETIC PROHIBITS THIS AS A DESIGN BASIS. PITCHED ROOFS, HORIZONTAL, LOW SLOPE ROOFS WITH FASCIA TRIM, SKYWINDOWS, EYEBROWS, ETC. DO NOT COUNT IN THE OVERALL BUILDING HEIGHT.
     7. FACADES WILL BE DEVELOPED TO VISUALLY SCREEN ROOFTOP EQUIPMENT.
   - G. THE ARCHITECTURAL DEVELOPMENT OF BUILDINGS WILL UTILIZE A BUILDING MASS REDUCTION ABOVE THE SECOND FLOOR OF FIVE FEET. MINOR ADJUSTMENTS AND REDUCTIONS IN THE NOTED FIVE FEET MAY OCCUR BASED ON THE DEVELOPMENT OF THE OVERALL DESIGN AESTHETIC. THIS MAY BE ACCOMPLISHED BY UTILIZING BUT NOT LIMITED TO THE FOLLOWING ARCHITECTURAL ELEMENTS:
     1. MATERIAL SHIFTS, PORCHES, BALCONIES, ROOFS EYEBROWS, ADDITIONAL ARCHITECTURAL FEATURES (SEE ITEM 4 ABOVE.)
   - H. PROPOSED BUILDINGS WILL UTILIZE FEATURES, BUT NOT LIMITED TO THE FOLLOWING:
     1. ROOF EXTENSIONS, SLOPED ROOFS, EYEBROWS, PARAPETS, SHADES, SCREENS
   - I. SOLAR PANELS LOCATED ON THE MAIN ROOFS ARE ABLE TO BE VISIBLE DUE TO THE NEED TO MAXIMIZE THE SOLAR GAIN REQUIRED AND NOT NEED TO BE SCREENED.
   - J. MECHANICAL EQUIPMENT WILL CONTAIN SCREENING TECHNIQUES TO REMAIN "INVISIBLE" FROM THE PREDOMINATE GRADE. ROOF SCREEN MATERIAL WILL BE COMPATIBLE WITH THE OVERALL ARCHITECTURAL DESIGN AESTHETIC.
   - K. SIGNAGE ASSOCIATED WITHE THE PRINCIPAL STRUCTURE IN PLANNING AREA #2, KNOWN AS THE ROCK REST LODGE, MAY REMAIN AS EXISTING AT TIME OF RECORDING.
   - L. ARCHITECTURAL EXEMPTIONS
     1. THE EXISTING PRINCIPAL STRUCTURE, LOCATED IN PLANNING AREA #2 AND KNOWN AS THE ROCK REST LODGE, IS EXEMPT FROM THE ARCHITECTURE WRITTEN RESTRICTIONS OF THIS PLANNED DEVELOPMENT AND SECTION 13 OF THE ZONING RESOLUTION IN DEFERENCE TO ITS ARCHITECTURALLY UNIQUE DESIGN. THE UNIQUE CHARACTER OF THE EXISTING BUILDING SHOULD BE MAINTAINED TO THE EXTENT PRACTICABLE.
     2. THE STONE GATEWAY ARCH IN PLANNING AREA #1 IS EXEMPT FROM THE ARCHITECTURE WRITTEN RESTRICTIONS OF THIS PLANNED DEVELOPMENT AND SECTION 13 OF THE ZONING RESOLUTION IN DEFERENCE TO ITS ARCHITECTURALLY UNIQUE DESIGN.

S. GOLDEN ROAD / MT VERNON MIXED-USE

REZONING APPLICATION

JEFFERSON COUNTY, CO

PREPARED BY:

ripleydesign
LANDSCAPE ARCHITECTURE, LAND PLANNING
419 Canyon Ave. Suite 200 Fort Collins, CO 80521
phone 970.224.5828 | fax 970.225.6657 | www.ripleydesigninc.com

LANDSCAPE ARCHITECT | LAND PLANNER

RIPLEY DESIGN INC.
Joel Weikert
419 Canyon Ave. Suite 200
Fort Collins, CO 80521
p. 970.224.5828

OWNER | APPLICANT

PETRIFIED TREE, LLC AND TALK TO THE HAND, LLC

Phil Hodgkinson
1776 Platte St.
Denver, CO 80202
p. 970.402.8244

ARCHITECT

VFLA ARCHITECTURE + INTERIORS
Jeff Fleischer
419 Canyon Ave. Suite 200
Fort Collins, CO 80521
p. 970.224.1191

ORIGINAL SIZE 24X36

ISSUED

No.	DESCRIPTION	DATE
01	REZONE	08.10.2023
02	RESUBMITTAL	11.20.2023
03	RESUBMITTAL	03.19.2024

REVISIONS

No.	DESCRIPTION	DATE
01	REZONE AMENDMENT	02.06.2025
02	REZONE AMENDMENT	03.18.2025

OFFICIAL DEVELOPMENT PLAN

SEAL:

ENTITLEMENT DRAWINGS NOT FOR CONSTRUCTION

PROJECT No.:	R22-045.1
DRAWN BY:	JW
REVIEWED BY:	RL

DRAWING NUMBER:

2 OF 2

MAPS

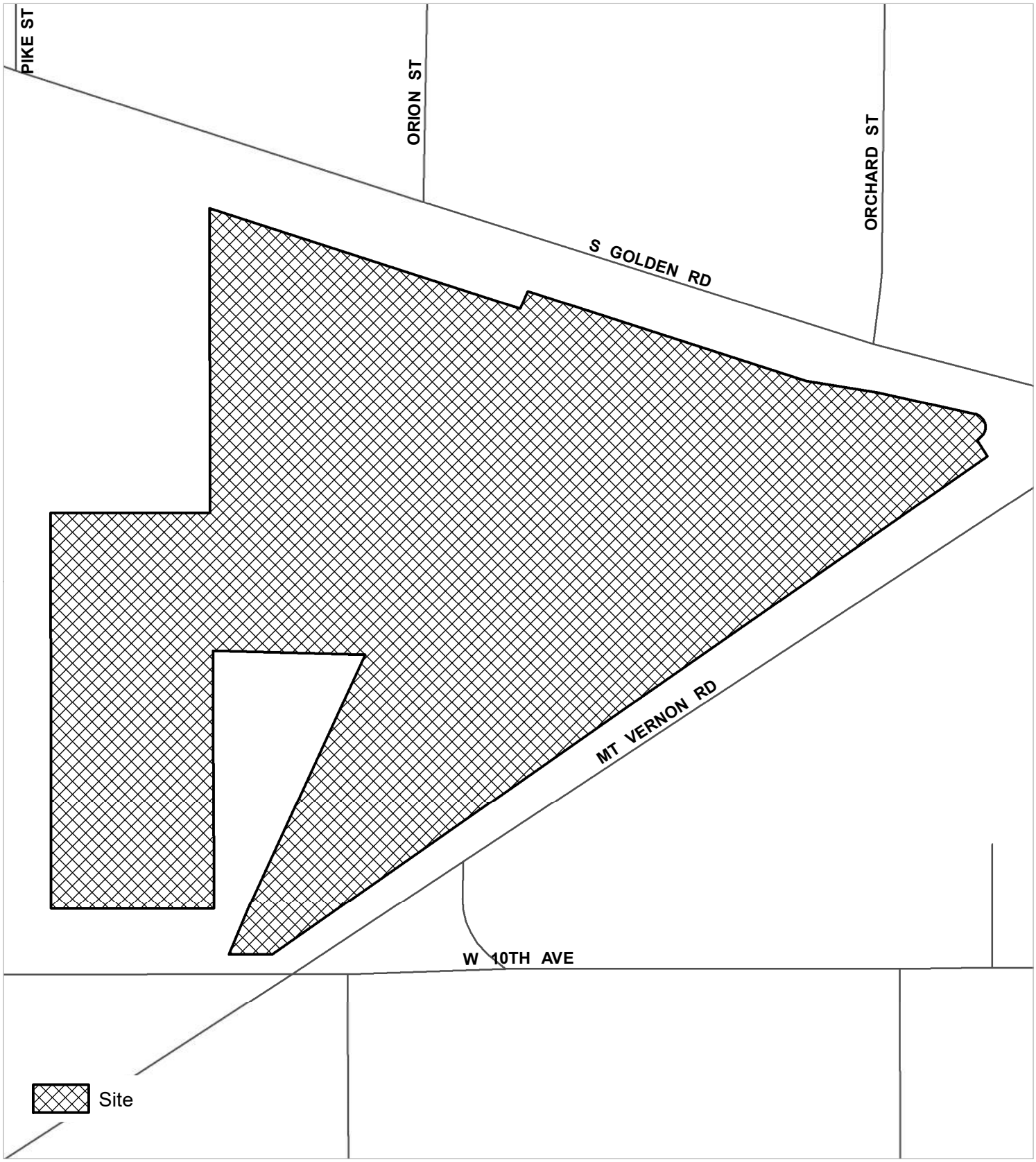

Case Number: 24-133066RZ

Location: Section 1, T4S, R70W

JEFFERSON COUNTY COLORADO

This product has been developed for internal use only. The Planning and Zoning Division makes no warranties or guarantees, either expressed or implied, as to the completeness, accuracy or correctness of such products, nor accepts any liability arising from any incorrect, incomplete or misleading information contained therein.

0 50 100 200 Feet

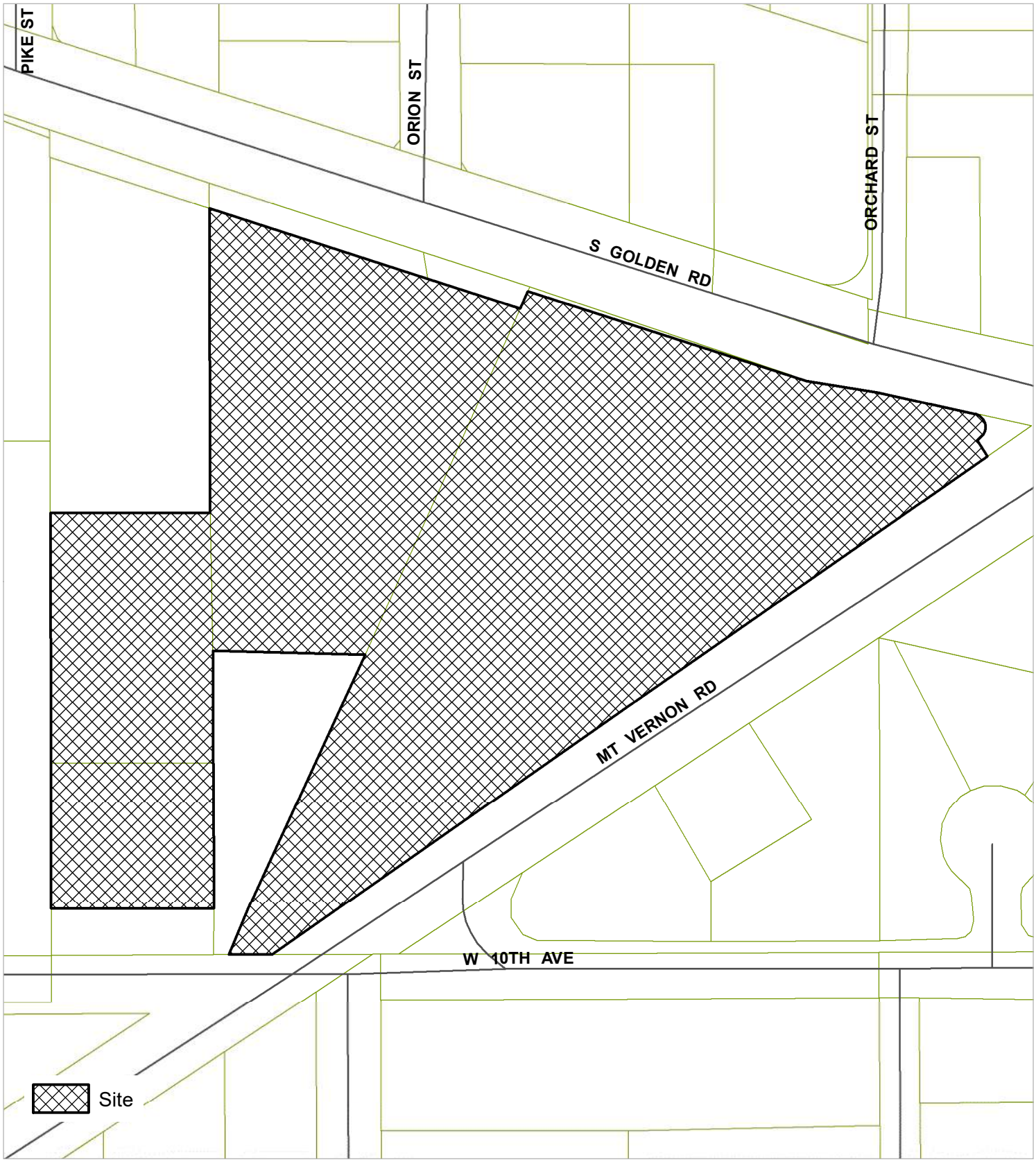

Case Number: 24-133066RZ

Location: Section 1, T4S, R70W

JEFFERSON COUNTY COLORADO

This product has been developed for internal use only. The Planning and Zoning Division makes no warranties or guarantees, either expressed or implied, as to the completeness, accuracy or correctness of such products, nor accepts any liability arising from any incorrect, incomplete or misleading information contained therein.

0 50 100 200 Feet

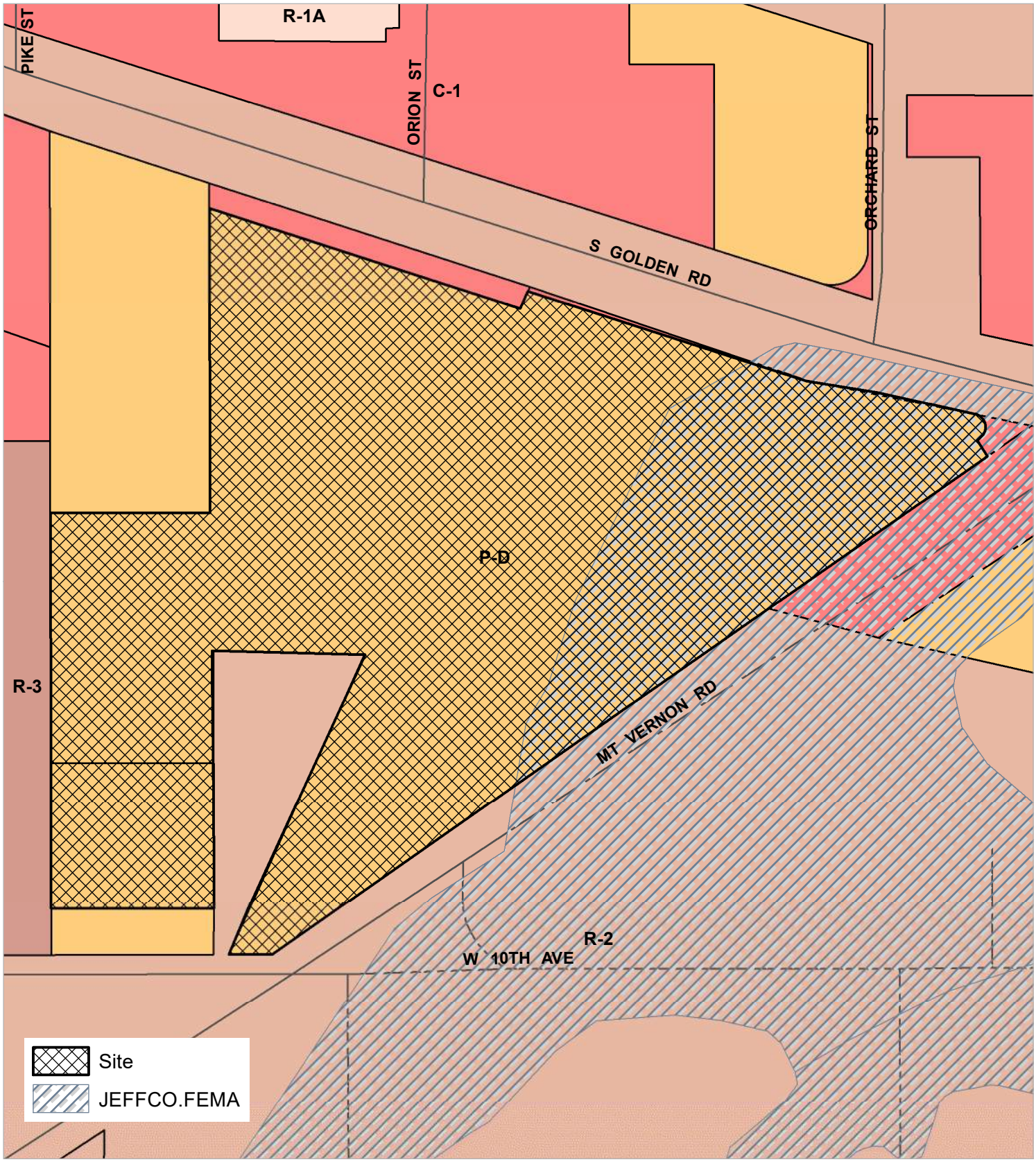

Case Number: 24-133066RZ

Location: Section 1, T4S, R70W

JEFFERSON COUNTY COLORADO

This product has been developed for internal use only. The Planning and Zoning Division makes no warranties or guarantees, either expressed or implied, as to the completeness, accuracy or correctness of such products, nor accepts any liability arising from any incorrect, incomplete or misleading information contained therein.

0 50 100 200 Feet

Case Number: 24-133066RZ

Location: Section 1, T4S, R70W

JEFFERSON COUNTY COLORADO

This product has been developed for internal use only. The Planning and Zoning Division makes no warranties or guarantees, either expressed or implied, as to the completeness, accuracy or correctness of such products, nor accepts any liability arising from any incorrect, incomplete or misleading information contained therein.

0 50 100 200 Feet

Case No. 24-133066RZ

Legal Description

Street Location of Property 16121 W. 10th Ave.
Is there an existing structure at this address? Yes X No_____

Type the legal description and address below.

Lots 1 and 2, more correctly known as Tracts 1 and 2, Burdick Heights, except the Northerly 20 feet of said Lots 1 and 2, Burdick Heights, and except that portion more particularly described as follows:
A tract of land in the Northwest Quarter of Section 1, Township 4 South, Range 70 West of the 6th P.M., more particularly described as follows: Beginning at a point 778.25 feet East of the Southwest corner of the Northwest Quarter of Section 1, Township 4 South, Range 70 West; thence N 0°10' W a distance of 247.73 feet; thence S 86°59' E a distance of 124.46 feet; thence S 24°23' W a distance of 264.80 feet to the South line of the Northwest Quarter of Section 1; thence West a distance of 14.25 fee, more or less, along the South line of the Northwest Quarter of Section 1 to the Point of Beginning, County of Jefferson, State of Colorado.

Lot 2A, Burdick Heights Exemption Survey No. 1 Adjustment 1, a Revision to Lot 2, Burdick Heights Exemption Survey No 1, located in the NW 1/4 of Section 1, Township 4 South, Range 70 West, of the 6th P.M., per the Map recorded July 10, 2007, at Reception No. 2007080061, described as follows:

Lot 2, Burdick Heights Exemption Survey No. 1, more particularly described as follows:

A Parcel located in the SW 1/4 of the NW 1/4 of Section 1, Township 4 South, Range 70 West of the 6th Principal Meridian, per Map recorded June 19, 1991 in Plat Book 106 at Page 30 as Reception Number 91053181, described as follows:

Commencing at the W 1/4 Corner of Said Section 1, thence N89°58'14"E, along the South line of the NW 1/4 of said Section 1, a distance of 653.11 feet; thence continuing N89°58'14"E, a distance of 124.65 feet; thence N00°01'21"W, a distance of 25.00 feet to the SE corner of Lot 1, Burdick Heights Exemption Survey No.1; thence N00°01'21"W, along the East line of Lot 1, Burdick Heights Exemption Survey No. 1, a distance of 127.94 feet to the SE corner of Lot 2, Burdick Heights Exemption Survey No. 1 and the True Point of Beginning; thence N00°01'21"W, along the East line of said Lot 2, a distance of 214.71 feet to the NE corner of said Lot 2; thence S89°59'43"W, along the North line of said Lot 2, a distance of 124.77 feet to the NW corner of said Lot 2; thence S00°02'27"E, along the West line of said Lot 2, a distance of 214.80 feet to the SW corner of said lot 2; thence N89°57'16"E, along the South line of said Lot 2, a distance of 124.70 feet to theTrue Point of Beginning.

TOGETHER WITH a 25 foot easement for Ingress and Egress, being the Westerly 25 feet of Lot 1, Burdick Heights Exemption Survey No 1, per the Map recorded June 19, 1991 in Book 106 at Page 30, as Reception Number 91053181County of Jefferson, State of Colorado.

Beginning at a point 793 feet East of the Southwest corner of the NW1/4 Section 1, Township 4 South, Range 70 West; thence 3/4ths of a foot East; thence Northeasterly 706 feet to East line of SW1/4 NW1/4; thence Northwesterly along South Golden Road 284 feet; thence Southwesterly 609 feet to point of beginning.
ALSO: Commencing 793 feet East of Southwest corner of NW1/4, Section 1, Township 4 South, Range 70 West, thence Northeasterly 706 feet to the East line of SW1/4 NW1/4; thence Easterly along South side of South Golden Road, 171 feet to intersection of Mount Vernon Road and South Golden Road, thence Southwesterly along the Northwesterly side of Mount Vernon road to the South line of the NW1/4 of Section 1; thence West 38 feet to place of beginning.
County of Jefferson, State of Colorado

EXCEPT

A TRACT OF LAND BEING A PART OF THOSE TWO PARCELS DESCRIBED AT RECEPTION NUMBER F0316415, JEFFERSON COUNTY RECORDS, SITUATED IN THE NORTHWEST ONE-QUARTER OF SECTION 1, TOWNSHIP 4 SOUTH, RANGE 70 WEST OF THE 6TH PRINCIPAL MERIDIAN, COUNTY OF JEFFERSON, STATE OF COLORADO,BEING MORE PARTICULARY DESCRIBED AS FOLLOWS:

COMENNCING AT THE CENTER ONE-QUARTER CORNER OF SAID SECTION 1, FROM WHENCE THE WEST ONE-QUARTER CORNER BEARS S 89°47′04″ W.
THENCE N 71°11′11″ W, A DISTANCE OF 1697.06 FEET TO THE NORTHWEST CORNER OF THE FIRST PARCEL AND THE POINT OF BEGINNING;
THENCE S 72°05′55″ E, ALONG THE NORTH LINE OF SAID PARCELS, A DISTANCE OF 294.00 FEET TO A POINT;
THENCE S 75°49′23″ E, A DISTANCE OF 171.00 FEET TO THE NORTHEAST CORNER OF THE SECOND PARCEL;
THENCE S 57°22′13″ W, ALONG THE EAST LINE OF SAID SECOND PARCEL A DISTANCE OF 44.03 FEET TO A POINT;
THENCE LEAVING SAID EAST LINE, N 32°37′47″ W, A DISTANCE OF 15.52 FEET TO A POINT;
THENCE N 50°11′07″ E, A DISTANCE OF 3.89 FEET TO A POINT OF TANGENT CURVATURE;
THENCE ALONG A 11.00-FOOT RADIUS CURVE TO THE LEFT HAVING A CENTRAL ANGLE OF 125°50′22″, AN ARC LENGTH OF 24.16 FEET, TO A POINT OF TANGENCY;
THENCE N 75°39′14″ W, A DISTANCE OF 122.99 FEET TO A POINT;
THENCE N 73°41′51″ W, A DISTANCE OF 128.10 FEET TO A POINT;
THENCE N 72°06′46″ W, A DISTANCE OF 96.12 FEET TO A POINT ON THE WEST LINE OF SAID FIRST PARCEL;
THENCE N 24°26′35″ E, ALONG SAID WEST LINE, A DISTANCE OF 4.12 FEET TO THE POINT OF BEGINNING

CONTAINING 1,546 SQ. FT. MORE OR LESS.

Section 1 Township 4 S. Range 70 W.
Calculated Acreage 5.87 Acres Checked by: Becky Daleske
Address Assigned (or verified) 16121 W. 10th Ave.

COMMUNITY MEETING SUMMARY

JEFFERSON COUNTY COLORADO | Planning & Zoning Division
100 Jefferson County Parkway, Suite 3550, Golden, Colorado 80419-3550
☎ 303.271.8700 • Fax 303.271.8744 • https://jeffco.us/planning-zoning

COMMUNITY MEETING SUMMARY

Case Number	Meeting Date	Approx. # of Citizens	# Signed in
25-101008CMT	2.5.2025	2	

Meeting Location

Teams (virtual)

Subject Property

16121 W 10th Ave (related to parcels at 16005 Mt Vernon, 16100 Golden Road, and 16129 W 10th Ave)

Property Owner	Applicant/Representative
Petrified Tree LLC	Joel Weikert (Ripley Design)

Summary of the Applicant's Presentation

Applicant talked about the previously approved PD (S Golden Rd / Mt Vernon Mixed-Use Official Development Plan) and why they are Rezoning again to include the property at 16121 W 10th Ave in their PD zone district boundary.

Information Presented/Format of the Meeting

The applicant screen shared their presentation which included maps, visual massing, and details about their approved ODP and their new Rezoning proposal.

Overall Impression/Tone of Meeting

The applicants throughly covered their application and respectfully answered all community questions. The tone was friendly and educational.

Main Points/Issues Raised by Citizens/Applicant's Response

Questions/concerns:
- what is the proposed use for the additional property/is this an access point or going to be built out? (Applicant: the design has not been developed yet. It is a potential third access point for the property, especially for emergency access. Building is not planned to be on that property.)
- is there a goal to acquire the remaining parcel on W 10th between the existing ODP area and this new property? (No plans to do so at this time.)
- what is the timeline for construction on this project? (After the Rezoning, still have to design the site, then go through the Site Development Plan process. Likely a minimum of 18 months before any construction would begin.)
- asked for applicant contact information (Representative provided contact info)

REFERRAL COMMENTS

Sara Homeyer

From: AUTOMAILER@JEFFCO.US
Sent: Thursday, February 13, 2025 8:16 AM
To: Sara Homeyer
Cc: Mark Weiden
Subject: 24 133066 RZ - Agency Response

Case Number: 24 133066 RZ
Case Type: Rezoning
Case Name: 16121 W 10Th AVE
Review: Road & Bridge
Results: No Comment (no further review)
Review Comments:
Scheduled End Date: 05-MAR-25
Reviewer: Mark Weiden
Description: Rezone to amend the existing S Golden Road / Mt Vernon Mixed Use Official Development Plan zone district boundary.

PLEASANT VIEW METROPOLITAN DISTRICT FIRE DEPARTMENT
955 Moss St. Golden, CO 80401 Phone: (303) 279-4361 Fax: (303) 278-3430

February 13, 2025

Jefferson County Planning and Zoning Department
100 Jefferson County Parkway, Suite 3550
Golden, Colorado 80419-3550

Attn: Sara Hutchinson Case Manager
Contact Info: shutchin@jeffco.us 303-271-8732

RE: Rezon will amend the existing S Golden Rd / Mixed Use Development plan zone to include 16121 W. 10th Ave in the boundary of the development.
Case Number 24-133066 RZ

These properties are within the Pleasant View Metropolitan District, and the Pleasant View Fire Department will provide fire protection services. Fire service will be provided as long as the provision of the International Fire Code, 2018 edition, including all amendments, is met in development.

The Pleasant View Fire Department has no objection to including 16121 W. 10 Ave in the development plan boundary. The developer/owner shall submit an acceptable site plan showing that the fire apparatus access road through the development and shall meet the fire department turning radius of inside turning: 37 feet, outside curb to curb: 45 feet, and outside wall to wall: 52 feet. The plans must also show that all portions of the exterior of the buildings can be reached within 150 feet of the 24-foot wide access lane. No Parking Fire Lane signs are required along the fire apparatus access lanes.

The developer/Owner shall submit acceptable building plans that show the building construction type, building height, and occupancy type for the fire flow requirements that will need to meet the demand in the 2018 IFC.

Fire flow requirements for this project will depend on the construction type, the number of buildings on the site, and the buildings' square footage. More information is needed to determine these requirements. In addition, the development will require the installation of fire hydrants for this proposed project. The available water needs will be obtained from the Consolidated Mutual Water Company. The developer/Owner is encouraged to meet with Consolidated Mutual Water and the fire department to discuss the infrastructure improvement needed to meet fire flow demands and hydrant placement.

Permits are required from the fire department for core and shell improvements, automatic fire protection systems, automatic fire detection systems, and storage of hazardous materials.

Pleasant View Fire Department reserves the right to provide additional comments/requirements when plans are submitted and reviewed per applicable codes and amendments.

If you have any questions regarding this correspondence, don't hesitate to contact me at 303-279-4361 extension 301 or email me.

Respectfully,

Chris P. Malmgren
Fire Chief

Sara Homeyer

From: AUTOMAILER@JEFFCO.US
Sent: Friday, February 14, 2025 9:43 AM
To: Sara Homeyer
Cc: Elizabeth Stoner
Subject: 24 133066 RZ - Agency Response

Case Number: 24 133066 RZ
Case Type: Rezoning
Case Name: 16121 W 10Th AVE
Review: Open Space
Results: No Comment (no further review)
Review Comments:
Scheduled End Date: 05-MAR-25
Reviewer: Elizabeth Stoner
Description: Rezone to amend the existing S Golden Road / Mt Vernon Mixed Use Official Development Plan zone district boundary.

Sara Homeyer

From: Jaime Medina <jmedina@lakewood.org>
Sent: Tuesday, February 18, 2025 2:08 PM
To: Sara Homeyer
Subject: --{EXTERNAL}-- Referral (Case Number: 24-133066 RZ)

This Message Is From an External Sender
This message came from outside your organization.

Report Suspicious

Hi Sara,

The City of Lakewood has no comments for the proposal at 16121 W 10th AVE.

Thank you,

Jaime Medina
Planning Technician – Development Review

303.987.7505
CIVIC CENTER NORTH
470 SOUTH ALLISON PARKWAY
LAKEWOOD, COLORADO 80226
WWW.LAKEWOOD.ORG/PLANNING [lakewood.org]
Facebook [facebook.com] | Twitter [twitter.com] | YouTube [youtube.com]

Lakewood
Sustainability
& Community Development

Sara Homeyer

From: PlatReview <PlatReview@lumen.com>
Sent: Wednesday, February 26, 2025 1:10 PM
To: Sara Homeyer
Cc: Taylor, Lisa
Subject: --{EXTERNAL}-- FW: 24-133066RZ - ELECTRONIC REFERRAL - EXTERNAL - Rezoning

This Message Is From an External Sender
This message came from outside your organization.

Report Suspicious

Sara,

Our engineer has completed the review of the plat, and the comments are as follows: "After review, Lumen has aerial facilities in potential conflict with the provided site plans. Lumen also has both buried and aerial facilities located within the Right-of-Ways of S. Golden Rd. and Mt. Vernon Rd. Lumen recommends having all utilities in the area located and protected in place to ensure safety and protection of all facilities. Please reach out to the engineer directly if a job is needed to relocate facilities."

If you require signatures or have any additional questions, please feel free to contact the engineer directly at Lisa.Taylor@lumen.com.

Best regards,

Kari Hoover
Lumen Plat Review
Business Analyst I
platreview@lumen.com

From: AUTOMAILER@JEFFCO.US <AUTOMAILER@JEFFCO.US>
Sent: Wednesday, February 12, 2025 5:10 PM
To: PAURIC@LAKEWOOD.ORG; JGUTIERREZ@SUMMITUTILITIESINC.COM; CMALMGREN@PLEASANTVIEWFIRE.COM; CMALMGREN@PLEASANTVIEWFIRE.COM; TWALLER@PLEASANTVIEWMETRO.ORG; PlatReview <PlatReview@lumen.com>; PLANNING@CITYOFGOLDEN.NET; REFERRALSXCELDISTRIBUTION@XCELENERGY.COM; ALFONZO_MARTINEZ@CABLE.COMCAST.COM; ASUMMERS@DRCOG.ORG; GCHIAPELLA@DRCOG.ORG; PLATREFERRAL@UNITEDPOWER.COM; IOANA.COMANICIU@STATE.CO.US
Cc: SHOMEYER@JEFFCO.US; MSCHUSTE@JEFFCO.US; KMILLER@JEFFCO.US
Subject: 24-133066RZ - ELECTRONIC REFERRAL - EXTERNAL - Rezoning

ELECTRONIC REFERRAL

This e-mail is to inform you that the application referenced below is now beginning the 1st Referral. Please review and provide comments on the referral documents found in the **Case Folder** in the **Current Referral Documents** sub-folder. Comments should be submitted electronically to the Case Manager by the due date below.

Case Number: 24-133066 RZ
Case Type: Rezoning
Case Name: 16121 W 10Th AVE
Address: 16121 10Th AVE
Description: Rezone to amend the existing S Golden Road / Mt Vernon Mixed Use Official Development Plan zone district boundary.
Case Manager: Sara Homeyer
Case Manager Contact Information: shomeyer@co.jefferson.co.us (303) 271-8732
Comments Due: 05-MAR-25

If you have any questions related to the processing of this application, please contact the Case Manager.

This communication is the property of Lumen Technologies and may contain confidential or privileged information. Unauthorized use of this communication is strictly prohibited and may be unlawful. If you have received this communication in error, please immediately notify the sender by reply e-mail and destroy all copies of the communication and any attachments.

Right of Way & Permits

1123 West 3rd Avenue
Denver, Colorado 80223
Telephone: 303.285.6612
violeta.ciocanu@xcelenergy.com

February 27, 2025

Jefferson County Planning and Zoning
100 Jefferson County Parkway, Suite 3550
Golden, CO 80419

Attn: Sara Homeyer

Re: 16121 W 10Th AVE, Case # 24-133066 RZ

Public Service Company of Colorado's (PSCo) Right of Way & Permits Referral Desk has reviewed the request for the **16121 W 10Th AVE Rezone**.

Please be advised that Public Service Company has existing natural gas and electric distribution facilities within the project lines. Public Service Company has **no objection** to this proposed rezone, contingent upon PSCo's ability to maintain all existing rights and this amendment should not hinder our ability for future expansion, including all present and any future accommodations for natural gas transmission and electric transmission related facilities, and that our current use/enjoyment of the area would continue to be an accepted use on the property and that it be "grandfathered" into these changes.

In the future to ensure that adequate utility easements are available within this development, PSCo requests that the following language or plat note be placed on the preliminary and final plats for the subdivision:

> *Six-foot (6') wide dry utility easements are hereby dedicated on private property adjacent to the front lot lines and eight-foot (8') on the rear lot lines of each lot in the subdivision or platted area identified as **single-family lots**. Ten-foot (10') wide dry utility easements are hereby dedicated on private property adjacent to all public streets, and around the perimeter of each **commercial/industrial** and **multi-family** lot in the subdivision or platted area including tracts, parcels and/or open space areas. These easements are dedicated to the County of Jefferson for the benefit of the applicable utility providers for the installation, maintenance, and replacement of electric, gas, television, cable, and telecommunications facilities (Dry Utilities). Utility easements shall also be granted within any access easements and private streets in the subdivision. Permanent structures, improvements, objects, buildings, wells, water meters and other objects that may interfere with the utility facilities or use thereof (Interfering Objects) shall not be permitted within said utility easements and the utility providers, as grantees, may remove any Interfering Objects at no cost to such grantees, including, without*

limitation, vegetation. Public Service Company of Colorado (PSCo) and its successors reserve the right to require additional easements and to require the property owner to grant PSCo an easement on its standard form.

The property owner/developer/contractor must complete the application process for any new natural gas or electric service, or modification to existing facilities via xcelenergy.com/InstallAndConnect. It is then the responsibility of the developer to contact the Designer assigned to the project for approval of design details.

Additional easements may need to be acquired by separate document for new facilities.

As a safety precaution, PSCo would like to remind the developer to contact Colorado 811 for utility locates prior to construction.

Violeta Ciocanu (Chokanu)
Right of Way and Permits
Public Service Company of Colorado dba Xcel Energy
Office: 303-285-6612 – Email: violeta.ciocanu@xcelenergy.com

JEFFERSON COUNTY COLORADO

Memorandum

To: Sara Homeyer
Planner

From: Patrick O'Connell
Engineering Geologist

Date: March 3, 2025

Re: 16121 W 10th Ave, Case No. 24-133066PA

I have reviewed the submitted documents for the subject project. I have the following comments:

1. The site is not located in a geologic hazard area, and geologic and geotechnical reports are not required at the time of the RZ.

Sara Homeyer

From: Hacker - DNR, Ariel <ariel.hacker@state.co.us>
Sent: Tuesday, March 11, 2025 3:31 PM
To: Sara Homeyer
Cc: Ioana Comaniciu - DNR
Subject: --{EXTERNAL}-- Referral 24-133066RZ

This Message Is From an External Sender
This message came from outside your organization.

Report Suspicious

Hello,

The DWR has reviewed the 24-13066RZ: 16121 W 10th Ave referral to rezone the parcel from residential use to mixed use. This referral does not appear to qualify as a "subdivision" as defined in section 30-28-101(10)(a), C.R.S. Therefore, pursuant to the State Engineer's March 4, 2005 and March 11, 2011 memorandums to county planning directors, this office will only perform a cursory review of the referral information and provide informal comments. The comments do not address the adequacy of the water supply plan for this project or the ability of the water supply plan to satisfy any County regulations or requirements. In addition, the comments provided herein cannot be used to guarantee a viable water supply plan or infrastructure, the issuance of a well permit, or physical availability of water. The proposed water supply is the existing municipal service. The municipal provider was identified in the referral to be Consolidated Mutual Water Company. This office has no comments on the proposed water supply.

Please reach out to me with any questions.

Thank you,

Ariel Hacker
Water Resources Engineer, Division 1
Pronouns: she/her/hers (why pronouns?)
P 303-866-3581 x 8234
1313 Sherman St., Suite 818, Denver, CO 80203
ariel.hacker@state.co.us | www.colorado.gov/water

Working Hours: Monday - Thursday 6:00 am - 4:30 pm

JEFFERSON COUNTY COLORADO

Boards and Commissions

Historical Commission

Memorandum

March 20, 2025

Rezoning 16121 W 10Th Ave (Case No. 24-133066 RZ) Second Referral

Project:

The proposal is to amend the existing S Golden Road / Mt Vernon Mixed Use Official Development Plan (ODP) zone district boundary. The existing plan includes 16129 West 10th Avenue, 16005 Mt Vernon Road, and 16100 South Golden Road. The submitted rezone amendment adds the 16121 West 10th parcel to Planning Area 1 of the approved ODP and adds no new written restrictions. Planning Area 1 provides for a vertically mixed-use building, including ground floor commercial fronting South Golden Road. Planning Area 2 is located on the northeastern corner of the development. The intent of Planning Area 2 is preserving the Rock Rest Lodge as it currently looks and operates today. All parcels are in the Pleasant View area.

Resources near the Project Area: (T4S, R70W Sec 1, NW1/4)

The Jefferson County Historic Commission (JCHC) reviewed the COMPASS database (The State of Colorado's Online Cultural Resources and Paleontological Database) and identified several historic resources. The Samuel and Albina Romano Residence (5JF2784) and the Old Homestead Court (Mountain Edge Court) are located close to the property. Other more distant historic resources to the east include Camp George West NHD, a ditch, Denver & Intermountain Railroad Spur Segment Golden Branch, and Intermountain Wye.

Resources in the Project Area:

JCHC reviewed the COMPASS database (The State of Colorado's Online Cultural Resources and Paleontological Database) and did not identify any cultural surveys or resources.

JCHC reviewed the County Assessors Property Records and found the following.

AIN/Parcel ID: 40-012-17-173

Single-family ranch: frame, built 1955 and meets the 50-year threshold as a historic resource. The aerial photos show several other small structures that are not listed and described.

Project Determination of Effect: Planning Area 1 does not mention protecting existing historic buildings. Future development will likely remove the historic buildings.

Mitigation Measures: None provided

Other Information:

Pleasant View was originally agricultural with irrigation ditches providing water for hay pastures, crops, and fruit trees. Its proximity to Golden and its location along South Golden Road and the Denver & Intermountain streetcar line accelerated growth. Today, Pleasant View is composed of the Pleasant View and Vernon Gardens subdivisions that were platted in the 1920s, as well as various subdivisions on the north side of South Golden Road. Most pre-1951 houses are vernacular frame buildings, most substantially altered by siding, window replacements and additions. A few houses have Craftsman features. (58) The most notable residential properties are stone buildings dating from 1910-1943. (See Norman 2002: 56-59).

(Richard Gardner, JCHC 2/18/2025)

The home upon the parcel in question appears to have been built by Ivan and Peggy Huffman in 1954, acquired by Robert and Ronald Bettinger in 1967 and then subdivided by Anna Bettinger to create two parcels in 1991: there's nothing particularly remarkable about it. It is certainly useful that they have flat out stated "The intent of Planning Area #2 is preserving the Rock Rest Lodge as it currently looks and operates today." At least from a legalistic point of view, they ought to incorporate such intent into the ODP so that it's officially recorded and minimizes chances of future misunderstanding.

The applicant responded to JCHC Recommendation 2 on the First Referral.

Recommendation 1: The applicant is strongly urged to professionally evaluate the historic structures at 16121 W 10Th Ave for eligibility to the National Register of Historic Places. If the buildings are significant and preservation in place is not feasible, the significant historic buildings should be documented prior to their destruction including documentation of the site's history. The Colorado Office of Archaeology and Historic Preservation (OAHP) documentation standards and guidelines should be followed (https://www.historycolorado.org/guidelines-historic-preservation-projects), and the documentation submitted to OAHP for their records.

(No response from the applicant)

Recommendation 2: The amendment to the existing ODP should include the following statements:

1) *"The existing Rock Rest building in Planning Area 2 and its companion stone gateway arch in Planning Area 1 shall be historically preserved in accordance with the intent of this ODP in consultation with the Jefferson County Historical Commission"*

2) *"The existing principal structure and future additions to the structure, located in Planning Area 2 and known as the Rock Rest Lodge, and its companion stone gateway arch in Planning Area 1 are exempt from the architecture written restrictions of this planning development and Section 13 of the zoning resolution in deference to their architecturally unique design."*

(applicant response)

"The intent of Planning Area #2 is preserving the Rock Rest Lodge as it currently looks and operates today. Please refer to the Official Development Plan provided with the application for further details and written restrictions regarding both Planning Area #1 and Planning Area #2."

The ODP contains sufficient language to protect the Rock Rest Lodge, companion stone gateway arch, and signage.

(Rick Gardner, JCHC; email 3/20/2025)

The 1955 house (of which there are a fair number that exact age in Pleasant View; it had considerable subdivision development then) appears of no particular significance.

Jefferson County Historical Commission Conclusion and Recommendation:

Though the applicant did not respond to Recommendation 1 from the first referral, they do not intend to evaluate and document the historic building at 16121 W 10Th Ave. JCHC asks the applicant to photo document the structure before its removal and submit the photo documentation to JCHC for the county archives. The ODP has sufficient language to protect the Rock Rest Lodge, companion stone gateway arch, and signage. No further review is needed. JCHC has the following recommendation:

Recommendation 1: The applicant is asked to photo document the historic structure at 16121 W 10Th Ave and submit the photo documentation to JCHC for the county archives.

MEMO

TO: Sara Homeyer
Jefferson County Planning and Zoning Division

FROM: Urszula Tyl/Tracy Volkman
Jefferson County Environmental Health Services Division

DATE: March 21, 2025

SUBJECT: Case #24-133066 RZ
Phil Hodgkinson
16121 W 10th Ave

PROPOSAL SUMMARY
Rezone to amend the existing S Golden Road / Mt Vernon Mixed Use Official Development Plan zone district boundary.

COMMENTS
Jefferson County Public Health (JCPH) provided comments for a pre-application, site development process in 2005 and comments for the pre-application process on February 14, 2023, September 8, 2023 and February 19, 2025 regarding the rezoning of the adjacent properties involved in this proposed development. We reviewed the documents submitted by the applicant for this rezoning process and have the following updated comments:

The applicant must submit the following documents or take the following actions prior to a ruling on the proposed rezoning of this property. NOTE: Items marked with a "✓" indicate that the document has been submitted, or action has been taken. **Please read the entire document for requirements and information. Please note additional documentation may be required.**

REZONING REQUIREMENTS (Public Water & Public Sewer Systems)

✓	Date Reviewed	Required Documentation/Actions	Refer to Sections
✓	02/18/2025	Submit a will serve service letter from the Water and Sanitation Districts indicating public water and sewer can be provided to 16121 W 10th Avenue proposed development in accordance with the Land Development Regulation (LDR) 21 and 22.	Water/Wastewater
✓	03/21/2025	Submit a notarized Environmental Questionnaire and Disclosure Statement packet, in accordance with the LDR Section 30 for 16121 W 10th Avenue.	Environmental Site Assessment
		Submit a Phase II Environmental Site Assessment for 16121 W 10th Avenue.	Environmental Site Assessment

WATER/WASTEWATER
Consolidated Mutual Water provided a letter dated December 2, 2024, stating 16121 W 10th Avenue is and can be provided with public water service.

The Pleasant View Water and Sanitation District provided a letter dated December 2, 2024, stating 16121 W 10th Avenue is and can be provided with public sewer service.

ONSITE WASTEWATER TREATMENT SYSTEM
JCPH has records of an existing onsite wastewater treatment system (OWTS) for 16121 W 10th Avenue. An OWTS Abandonment form, Form 300, must be submitted if the OWTS is no longer in use **at the time of site development.** Form 300 can be obtained at the following web address https://www.jeffco.us/2426/Forms-Planning-Documents

If the existing OWTS continues to be used, all setback requirements in accordance with the current Onsite Wastewater Regulation must be met and a letter from the Water and Sanitation Districts must be obtained to approve the continued use of the OWTS.

ENVIRONMENTAL SITE ASSESSMENT
The applicant submitted a signed and notarized Environmental Questionnaire and Disclosure Statement. The applicant checked "No" on all categories of environmental concern on the cover sheet, however a Phase I Environmental Site Assessment (ESA) was provided to this department indicating that there was a recognized environmental concern.

A Phase I ESA report dated November 18, 2024, prepared by 916 Consulting identified a recognized environmental condition and made the following conclusion:

> **1.6 Conclusions**
>
> We have performed a Phase I Environmental Site Assessment in conformance with the scope and limitations of ASTM Practice E1527-21, and the scope of work provided by the Client, of Mansanarez Residence, at 16121 W. 10th Avenue, in Golden, Jefferson County, Colorado 80401. Any exceptions to, or deletions from, this practice are described in Section 2.3 of this report. No controlled recognized environmental conditions (CRECs) and/or significant data gaps in connection with the subject property were identified.
>
> As noted above, the assessment has revealed a recognized environmental condition (REC) with regard to past on-site auto repair/salvage operations including unknown handling, storage and disposal practices of automotive fluids, solvents and fuels.

A phase II ESA was not provided by the applicant/ Per LDR Section 30 C. 2.b., JCPH believes a Phase II ESA should be conducted to evaluate the risk of potential liability from acquisition and use of the property for the intended purposes and provide pertinent public/worker health and safety information based on the Phase I ESA findings of historical use per LDR Section 30 D.1. Based on the findings of Phase II ESA, a Phase III ESA may be required. We strongly recommend that the County does not accept any transfer of land interest, such as but not limited to, Right of Way, until the recognized environmental condition can be further assessed in the Phase II ESA.

Should stained or discolored soil or contaminated groundwater be encountered during construction and excavation of this area, the contractor must cease operations and contact a professional engineer licensed in Colorado or equivalent expert to further evaluate the soil and/or groundwater conditions, the nature and extent of the contamination, and determine the proper

remediation and disposal of the contaminated material. The contactor must contact the CDPHE, Hazardous Materials and Waste Management Division at 303.692.3320.

ACTIVE LIVING
JCPH is in support of the mixed-use development where residents can live, work, and recreate within the community as it encourages physical activity, such as walking or biking, and reduces automobile travel which decreases air pollution.

JCPH strongly recommends that the developer design this project to include all modes of transportation (walking, biking, public transportation, and vehicle travel), a balanced mix of housing and employment, and a vibrant mixed use of activity centers to create an integrated, cohesive community with pleasant streetscapes to be enjoyed by users of the development. We also suggest the following design criteria:

- Orient the buildings toward the streets and provide parking in the back of the building.
- Collaborate with the planning efforts of surrounding communities.
- Consider shade canopies (natural and or man-made) to prevent sun exposure.
- Arrange for sidewalk amenities (benches, tables, vegetation, sidewalk art, etc.)

Intentional and thoughtful design elements such as these can promote public health by actively engaging the community in physical and social activity that can enhance the well-being of the users of this development.

AIR
Land development activities that are less than 25 contiguous acres and less than 6 months in duration are exempt from permitting and do not need to report air emissions to the Air Pollution Control Division. However, the developer must use sufficient control measures and have a dust control plan in place to minimize any dust emissions during demolition, land clearing and construction activities. This department will investigate any reports of fugitive dust emissions from the project site. If confirmed, a notice of violation will be issued with appropriate enforcement action taken by the State.

Please be advised that a vehicle tracking pad or equivalent should be placed at egress points to prevent off-property transport of materials during construction.

<u>ASBESTOS</u>
For any proposed demolition activity, the applicant must obtain a Demolition Permit from the Asbestos Section at the Colorado Department of Public Health and the Environment, (303.692.3100). To get this permit, a certified asbestos inspector must examine the building or portion thereof to be removed and sample all suspect materials. If detected, an Asbestos Abatement Permit must be obtained, and the materials must be removed by a trained and qualified person or company prior to demolition.

RADON
JCPH strongly advises and encourages the developer to install a radon mitigation system in the proposed development to address the health hazard associated with radiation from radon gas. Jefferson County is considered a Zone Red which has the highest risk of radon exposure according to the Environmental Protection Agency (EPA). According to our statistics from our radon grants, more than half of the homes in Jefferson County have radon levels that are at or above 4 picoCuries per Liter (piCu/L). EPA advises that dwellings that test at or above 4 piCu/L

should have a radon mitigation system installed. It is extremely difficult to install a radon mitigation system in multi-home developments after the development is built. As such, it is more cost effective and the reasonable and prudent choice to install a radon system as part of the development to protect future residents.

LANDSCAPING
Landscaping plans should include appropriate water conservation measures. The use of native plant species and/or xeriscaping is strongly encouraged to minimize water quality impacts in the area.

NOISE
Since this facility will have residential properties, noise levels emitted from this property are more stringent and must comply with the Colorado Revised Statutes (Sections 25-12-101 through 108) which stipulates that the maximum residential noise levels must comply with the following 25 feet from the property line:

- 55dB(A) between 7:00 a.m. and 7:00 p.m.
- 50dB(A) at all other times.

Colorado Revised Statute 25-12-103 classifies noise that exceeds the maximum permissible noise level as a public nuisance which is a civil matter between the property owner and the complainant. **Please note:** JCPH and the Colorado Department of Public Health and Environment do not enforce noise complaint nuisances.

REGULATED FACILITIES
Certain commercial uses may be subject to plan reviews, inspections, licensing and/or permitting by this Department, or referred to State agencies. Regulated uses include the following: Child Care Centers/Schools, Assisted Living/ Nursing Home, Food Service Establishments/Grocery Stores, Swimming Pools/Hot tubs, Dry Cleaner, Gasoline Stations/Auto Repair/Auto Body, Car Wash, Body Art

NOTE: These case comments are based solely upon the submitted application package. They are intended to make the applicant aware of regulatory requirements. Failure by Jefferson County Public Health to note any specific item does not relieve the applicant from conforming to all County regulations. Jefferson County Public Health reserves the right to modify these comments, request additional documentation, and or add appropriate additional comments.

Sara Homeyer

From: AUTOMAILER@JEFFCO.US
Sent: Tuesday, March 25, 2025 8:58 AM
To: Sara Homeyer
Cc: Ross Klopf
Subject: 24 133066 RZ - Agency Response

Case Number: 24 133066 RZ
Case Type: Rezoning
Case Name: 16121 W 10Th AVE
Review: Engineer (Development Review)
Results: Complete
Review Comments: No further comments or concerns, there is no change in the number of units from the previous rezoning case.
Scheduled End Date: 01-APR-25
Reviewer: Ross Klopf
Description: Rezone to amend the existing S Golden Road / Mt Vernon Mixed Use Official Development Plan zone district boundary.

NOTIFICATION SUMMARY + PUBLIC / HOA COMMENTS

Notification Summary

JEFFERSON COUNTY COLORADO
Planning and Zoning

100 Jefferson County Parkway,
Suite 3550, Golden, CO 80419
303-271-8700
planning.jeffco.us | pzweb@jeffco.us

Case Number 24-133066RZ

As a requirement of the Jefferson County Zoning Resolution, the following Level 1 notification was provided for this proposal.

1. Notification of this proposed development was mailed to property owners within a 500 ft radius of the site and Registered Associations located within a one mile radius of the site.

   These radii are shown on the maps below. The initial notification was mailed at the time of the first referral. Additional notification was mailed 14 days prior to the Planning Commission Hearing identifying the scheduled hearings dates for both the Planning Commission and the Board of County Commissioners.

2. Sign(s), identifying the dates of the hearings before both the Planning Commission and the Board of County Commissioners, were provided to the applicant for posting on the site. The sign(s) were provided to the applicant with instructions that the site be posted 14 days prior to the Planning Commission Hearing.

3. Notification of the hearings before the Planning Commission and the Board of County Commissioners was published in the West Jeffco Hub.

   Lists of the specific property owners and registered associations that received notification are attached to this summary.

Property Owners

Registered Associations

From the Jefferson County Assessor's Office
Home Owners Associations within 1 miles of 40-012-17-173

Subject Properties

Owner	AIN/Parcel	PIN/Sched	Mail Addre	Property Address
PETRIFIED TREE LLC	40-012-17-	30040834	16005 MT	16121 W 10TH AVE , GOLDEN, CO 80401

9 HOA within 1 miles of subject properties

HOA Name	Amanda R	Contact	Address Li	Address Li	Phone 1	Phone 2	Email Addr	License	Comments	HOA	Hearing De	Board 1	Board 2	Board 3	Board 4	Board 5	Website	Area
APPLEWOOD POA	757291	BRIAN HAN	2750 ELDR	GOLDEN C		72047043	bjhanse2@	AOI	Last Updat	Y		Brian Hans		Will Musse	Luann Swi			Central Plains
DANIELS-WELCHESTER HOA	757435	DIANE DUI	11880 W 1	GOLDEN C	30358888	30391869	danielswel	AOI	Last Updat	Y	DIANE DUI	Diane Duff	BJ Schnittz	Pat Pennin	Pam Hackl		danielswel	GLUP
JEFFERSON COUNTY HORSE COUNCIL	757337				30381748		franevers@	AOI	Last Updat	N	ANY BOAR	Don McDo	Barb Sugg	Andrea Ra	Andrea Ra	Terry Liekl	jeffcohors	ALL AREAS
MESA VIEW ESTATES	757542	C/O CICI KI	9250 W. 5	LAKEWOO	30323346		cici@acmh		Last Updat	Y	CICI KESLE	Keith Sutto	Julie Fox	James McI	Jen Johnsc	Bill Meyer,	www.mesa	
PLAN JEFFCO	984263	C/O MICHI	24396 COI	GOLDEN, C	30352613	72083943	mpoolet@		Last updat	N	MICHELLE	John Litz	Peter Mor	Michelle P	Peter Mor	John Litz, E	www.plan	
ROLLING HILLS EAST HOA	757470	C/O JAME	2941 KENI	GOLDEN C	30398130	30321510	jscott@firs	AOI	Last Updat	Y	EVAN NOY	Evan Noye		James A Sc	James A Sc			N PLAINS
SAVE THE MESAS INC	757475	c/o Edee G	305 LOOK	GOLDEN C	30327945	30327945	edeegail@	AOI	Last Updat	Y	Edee Gail	Don Parke	Edee Gail	Don Parke	Anne Hedl	Mary Park		N PLAINS
SIXTH AVE WEST ESTATES	757364	LAKEWOO	9250 W. 5	LAKEWOO	30323346		cici@acmh	AOI	Last Updat	Y	CICI KESLE	Keith Sutto	Julie Fox	Janes McK	Jen Johnsc	Bill Meyer,	www.mesa	Central Plains
SIXTH AVE WEST TOWNHOME ONE ASSN	757365	MARLENE	368 GLADI	GOLDEN C	30327115		marti44@	AOI	Last Updat	Y	ANO DESIC	Marlene H	Hugh Milla	Marcia Joh	George Th	Jordan Oal	kthomas@	Central Plains

Owner	Mail Address	Mail Loc	Mail Zip
PETRIFIED TREE LLC	16005 MT VERNON RD	GOLDEN, CO	80401
A & J PROPERTIES LLC	16190 S GOLDEN RD	GOLDEN, CO	80401
CURRENT RESIDENT	16250 S GOLDEN RD	GOLDEN, CO	80401
CURRENT RESIDENT	9395 UTICA ST	WESTMINSTER, CO	80030
CURRENT RESIDENT	16070 W 10TH AVE	GOLDEN, CO	80401
CURRENT RESIDENT	16168 W 10TH AVE	GOLDEN, CO	80401
CURRENT RESIDENT	16259 W 10TH AVE L-4	GOLDEN, CO	80401
CURRENT RESIDENT	426 E ORCHARD	FREDERICKSBURG, TX	78624
CURRENT RESIDENT	660 W JAMISON CIR	LITTLETON, CO	80120
CURRENT RESIDENT	16259 W 10TH AVE L5	GOLDEN, CO	80401
CURRENT RESIDENT	23626 SUNROSE LN	GOLDEN, CO	80401
CURRENT RESIDENT	16259 W 10TH AVE L1	GOLDEN, CO	80401
CURRENT RESIDENT	PO BOX 150230	LAKEWOOD, CO	80215
CURRENT RESIDENT	8378 E PHILLIPS PL	CENTENNIAL, CO	80112
CURRENT RESIDENT	4871 S EVANSTON ST	AURORA, CO	80015
CURRENT RESIDENT	9110 W BELLWOOD PL	LITTLETON, CO	80123
CURRENT RESIDENT	16259 W 10TH AVE	GOLDEN, CO	80401
CURRENT RESIDENT	16259 W 10TH AVE F 6	GOLDEN, CO	80401
CURRENT RESIDENT	16259 W 10TH AVE H2	GOLDEN, CO	80401
CURRENT RESIDENT	10115 W 44TH AVE	WHEAT RIDGE, CO	80033
CURRENT RESIDENT	15 TIMBERHILL LN	LYNNFIELD, MA	01940
CURRENT RESIDENT	16259 W 10TH AVE H-6	GOLDEN, CO	80401
CURRENT RESIDENT	601 16TH ST STE C	GOLDEN, CO	80401
IMPERIAL MOUNTAIN PROPERTIES LLC	182 ANEMORE DR	BOULDER, CO	80302
CURRENT RESIDENT	16259 W 10TH AVE F4	GOLDEN, CO	80401
COLMAN FAMILY TRUST	1304 OPAL ST	SAN DIEGO, CA	92109
CURRENT RESIDENT	16529 W 10TH AVE	GOLDEN, CO	80401
CURRENT RESIDENT	16259 W 10TH AVE H5	GOLDEN, CO	80401
JFH HOLDINGS LLC	11757 W KEN CARYL AVE	LITTLETON, CO	80127
WEIDLER ELIZABETH C	16259 W 10TH AVE A-3	GOLDEN, CO	80401
SARLAR LLC	3921 SIMMS ST	WHEAT RIDGE, CO	80033
CURRENT RESIDENT	PO BOX 18513	GOLDEN, CO	80402
CURRENT RESIDENT	8885 W 77TH CIR	ARVADA, CO	80005
CURRENT RESIDENT	8390 BLACKGUM ST	PARKER, CO	80134
CURRENT RESIDENT	440 CARRIAGE GATE TRL	ATLANTA, GA	30331
CURRENT RESIDENT	30246 MERION LN	EVERGREEN, CO	80439
CURRENT RESIDENT	1616 BUCHHANAN ST NE	WASHINGTON, DC	20017
CURRENT RESIDENT	35 YANK WAY	LAKEWOOD, CO	80228
CURRENT RESIDENT	16259 W 10TH AVE A6	GOLDEN, CO	80401
CURRENT RESIDENT	66 CLARE CT	CASTLE ROCK, CO	80108
CURRENT RESIDENT	12078 W BERRY AVE	LITTLETON, CO	80127
CURRENT RESIDENT	600 BLUE JAY DR	GOLDEN, CO	80401
CURRENT RESIDENT	307 LOOKOUT VIEW CT	GOLDEN, CO	80401
CURRENT RESIDENT	16259 W 10TH AVE A5	GOLDEN, CO	80401
CURRENT RESIDENT	PO BOX 17834	GOLDEN, CO	80402
CURRENT RESIDENT	852 DEFRAME WAY	LAKEWOOD, CO	80228
CURRENT RESIDENT	16259 W 10TH AVE UNIT I-1	GOLDEN, CO	80401
CURRENT RESIDENT	319 JACKSON PL 319-A	GOLDEN, CO	80403

CURRENT RESIDENT	16259 W 10TH AVE B-3	GOLDEN, CO	80401
CURRENT RESIDENT	16259 W 10TH AVE #K1	GOLDEN, CO	80401
CURRENT RESIDENT	5330 S BAHAMA CT	CENTENNIAL, CO	80015
CURRENT RESIDENT	16259 W 10TH AVE 1-4	GOLDEN, CO	80401
CURRENT RESIDENT	16259 W 10TH AVE J- 1	GOLDEN, CO	80401
URBAN FAMILY TRUST	88 DEFRANCE WAY	GOLDEN, CO	80401
RJ MENARD TRUST	16259 W 10TH AVE E-3	GOLDEN, CO	80401
CURRENT RESIDENT	16259 W 10TH AVE E-6	GOLDEN, CO	80401
DINGDANG PROPERTY LLC	19584 W 56TH PLAC	GOLDEN, CO	80403
CURRENT RESIDENT	15259 W 10TH AVE APT	GOLDEN, CO	80401
TILLEY J 3 GOLDEN PINES LLC	12191 W 64TH AVE 209	ARVADA, CO	80004
CURRENT RESIDENT	16259 W 10TH AVE F-1	GOLDEN, CO	80401
CURRENT RESIDENT	13492 W DAKOTA AVE	LAKEWOOD, CO	80228
CURRENT RESIDENT	16259 W 10TH AVE E2	GOLDEN, CO	80401
CURRENT RESIDENT	16259 W 10TH AVE UNIT	GOLDEN, CO	80401
JEM ENTERPRISES LLC	9380 COTTONWOOD CIR	FREDERICK, CO	80504
CURRENT RESIDENT	16259 W 10TH AVE I-U6	GOLDEN, CO	80401
S PERSICHETTI FAMILY LLC	5574 S ELDRIDGE ST	LITTLETON, CO	80127
CURRENT RESIDENT	16259 W 10TH AVE #A1	GOLDEN, CO	80401
CURRENT RESIDENT	411 WALNUT ST	GREEN COVE SPRINGS, FL	32043
CURRENT RESIDENT	16359 W 10TH AVE X2	GOLDEN, CO	80401
CURRENT RESIDENT	16359 W 10TH AVE W-2	GOLDEN, CO	80401
CURRENT RESIDENT	5333 E 100TH PL	THORNTON, CO	80229
CURRENT RESIDENT	PO BOX 1417	FRISCO, CO	80443
CURRENT RESIDENT	16359 W 10TH AVE Z1	GOLDEN, CO	80401
CURRENT RESIDENT	1084 AZURE WAY	LOUISVILLE, CO	80027
CURRENT RESIDENT	1147 COLE ST	SAN FRANCISCO, CA	94117
CURRENT RESIDENT	456 COPPERDALE LN	GOLDEN, CO	80403
CURRENT RESIDENT	16359 W 10TH AVE W4	GOLDEN, CO	80401
CURRENT RESIDENT	9889 SUNSET HILL CIR	LONE TREE, CO	80124
JAMES I ROBERTSON REVOCABLE TRUST	16441 CASSIDY CT	LA PINE, OR	97739
CURRENT RESIDENT	5811 W 4TH AVE	LAKEWOOD, CO	80226
CURRENT RESIDENT	112 ALAMO DR	DURANGO, CO	81301
CURRENT RESIDENT	27 WILLOW FLAT RD	SILVER CITY, NM	88061
CURRENT RESIDENT	16359 W 10TH AVE Y-2	GOLDEN, CO	80401
CURRENT RESIDENT	16359 W 10TH AVE Z2	GOLDEN, CO	80401
CURRENT RESIDENT	16359 W 10TH AVENUE	GOLDEN, CO	80401
CURRENT RESIDENT	16359 W 10TH AVE R	GOLDEN, CO	80401
CURRENT RESIDENT	16539 W 10TH AVE	GOLDEN, CO	80401
CURRENT RESIDENT	3817 PILOT DR	PLANO, TX	75025
ROMMERDAHL PROTECTION TRUST	1117 8TH ST	GOLDEN, CO	80401
J & G PROPERTIES	1224 SPRUCE DR	GOLDEN, CO	80401
CURRENT RESIDENT	626 E PALM AVE	BURBANK, CA	91501
CURRENT RESIDENT	59 S HOLMAN WAY	GOLDEN, CO	80401
HOSER & NOB LLC	6059 S FARM RD 101	REPUBLIC, MO	65738
ROBERT MOODY TRUST	7505 W YALE AVE 2804	DENVER, CO	80227
CURRENT RESIDENT	135 WHITE ASH DR	GOLDEN, CO	80403
CURRENT RESIDENT	16359 W 10TH AVE	GOLDEN, CO	80401
CURRENT RESIDENT	21024 E GREENWOOD PL	AURORA, CO	80013

CURRENT RESIDENT	2609 TUMWATER LN	BOULDER, CO	80304
GILBERT FAMILY LIVING TRUST	11421 W LOUISIANA AVE	LAKEWOOD, CO	80232
CURRENT RESIDENT	5368 OWENS ST	ARVADA, CO	80002
CURRENT RESIDENT	2513 E FRANKLIN ST	RICHMOND, VA	23223
CURRENT RESIDENT	30734 PINE CONE LN	EVERGREEN, CO	80439
URBAN FAMILY TRUST	88 DE FRANCE WAY	GOLDEN, CO	80401
CURRENT RESIDENT	6134 W GOULD DR	LITTLETON, CO	80123
CURRENT RESIDENT	1363 LAURENWOOD WAY	HGHLNDS RANCH, CO	80129
CURRENT RESIDENT	16359 W 10TH AVE Y-3	GOLDEN, CO	80401
CURRENT RESIDENT	14167 W 3RD PL	GOLDEN, CO	80401
TERRY L AUMILLER & CONNIE K AUMILLER JOIN	PO BOX 608	PINE, CO	80470
CURRENT RESIDENT	16359 W 10TH AVE XX-2	GOLDEN, CO	80401
CURRENT RESIDENT	1367 HILLTOP CIR	WINDSOR, CO	80550
LARA & WAYLLACE SERVICES LLC	5540 W 73RD AVE	ARVADA, CO	80003
CURRENT RESIDENT	16370 W 10TH AVE	GOLDEN, CO	80401
CURRENT RESIDENT	16295 MOUNT VERNON RD	GOLDEN, CO	80401
CURRENT RESIDENT	16040 MOUNT VERNON RD	GOLDEN, CO	80401
CURRENT RESIDENT	16060 MT VERNON RD	GOLDEN, CO	80401
CURRENT RESIDENT	16090 MT VERNON RD	GOLDEN, CO	80401
CURRENT RESIDENT	17190 MT VERNON RD	GOLDEN, CO	80401
CURRENT RESIDENT	PO BOX 1540	KREMMLING, CO	80459
NICHOLAS FELTIS & ROSETTA FELTIS TRUST	16160 MT VERNON RD	GOLDEN, CO	80401
CURRENT RESIDENT	PO BOX 614	GOLDEN, CO	80401
CURRENT RESIDENT	16250 MT VERNON RD	GOLDEN, CO	80401
CURRENT RESIDENT	16305 MT VERNON RD	GOLDEN, CO	80401
CURRENT RESIDENT	16345 MT VERNON RD	GOLDEN, CO	80401
CURRENT RESIDENT	975 ORCHARD ST	GOLDEN, CO	80401
961 ORION STREET LLC	2868 S KITTREDGE PARK RD	EVERGREEN, CO	80439
CURRENT RESIDENT	970 ORION ST	GOLDEN, CO	80401
CURRENT RESIDENT	930 QUAKER ST	GOLDEN, CO	80401
GOLDEN PINES CONDOMINIUM ASSOCIATION INC	2180 W STATE RD 434 5000	LONGWOOD, FL	32779
JEFFCO P&Z; ATTN SARA HOMEYER	100 JEFFERSON CTY PKWY #35	GOLDEN, CO	80419

The Denver Post, LLC

PUBLISHER'S AFFIDAVIT

City and County of Denver)
State of Colorado)
)

The undersigned **Nicole Maestas** being first duly sworn under oath, states and affirms as follows:

1. He/she is the legal Advertising Reviewer of The Denver Post, LLC, publisher of The Denver Post and Your Hub.
2. The Denver Post and Your Hub are newspapers of general circulation that have been published continuously and without interruption for at least fifty-two weeks in Denver County and meet the legal requisites for a legal newspaper under Colo. Rev. Stat. 24-70-103.
3. The notice that is attached hereto is a true copy, published in Your Hub for West Jeffco (including the counties of Jefferson, Arapahoe, Arvada, Denver, Lakewood, Gilpin, Clear Creek, and Westminster) on the following date(s):

May 22, 2025

Signature

Subscribed and sworn to before me this 23 day of May, 2025.

Notary Public

JULIANA DASHWOOD
NOTARY PUBLIC
STATE OF COLORADO
NOTARY ID 20244034234
MY COMMISSION EXPIRES SEPTEMBER 11, 2028

(SEAL)

NOTICE OF PUBLIC HEARINGS FOR SPECIAL USE

NOTICE IS HEREBY GIVEN that the Board of County Commissioners of the County of Jefferson, State of Colorado will hold a hybrid (in-person and online virtual) public hearing on a proposed rezoning of certain property within Jefferson County, Colorado. The public hearing will be held at the Jefferson County Administration and Courts Facility, Hearing Room 1, at 100 Jefferson County Parkway, Golden, Colorado, on June 10, 2025 at 9:00 a.m. with the virtual hearing link being available on the County's website at https://www.jeffco.us/meetings .

FURTHER NOTICE IS HEREBY GIVEN that said public hearings may be continued from time to time without further notice.

Said proposed rezoning is Case No. 24-133066RZ/South Golden Road / Mt. Vernon Mixed-Use ODP Amendment, which proposes to rezone from Planned Development (PD) to a new Planned Development to amend the existing South Golden Road / Mt. Vernon Mixed-Use Official Development Plan zone district boundary which allows a mixed-use project with ground-floor retail and up to 200 multi-family residential dwelling units above, and to preserve the Rock Rest Lodge.

Said property is located at: 16121 W 10th Ave, 16129 W 10th Ave, 16005 Mt Vernon Rd, and 16100 S Golden Rd, Golden, which contains approximately 5.87 acres.

BE IT ALSO KNOWN that the text and/or maps relating to the above referenced rezoning and any text and/or maps so certified by the Jefferson County Planning Commission may be examined by contacting the Jefferson County Planning and Zoning Division during any working day. You can reach Planning & Zoning at 303-271-8700 or pzweb@jeffco.us.

BOARD OF COUNTY COMMISSIONERS
COUNTY OF JEFFERSON
STATE OF COLORADO

Published May 22, 2025 /s/ Lesley Dahlkemper, Chairman

Please note: The Denver Post will no longer be issuing paper tears. There will only be a digital copy.

CURRENT ZONING

ODP Bk. 64 Pg 58 Rec. #91056575 6/27/91 15:00 County of Jefferson State of Colorado $20.00

BETTINGER OFFICIAL DEVELOPMENT PLAN

Case Number: 290-15
Map Number: 219

ODP PREPARED BY: Tim Joswiak
4981 S. Garland St.
Littleton, CO 80123
303-973-4157
February 3, 1990
Revised: May 1, 1991

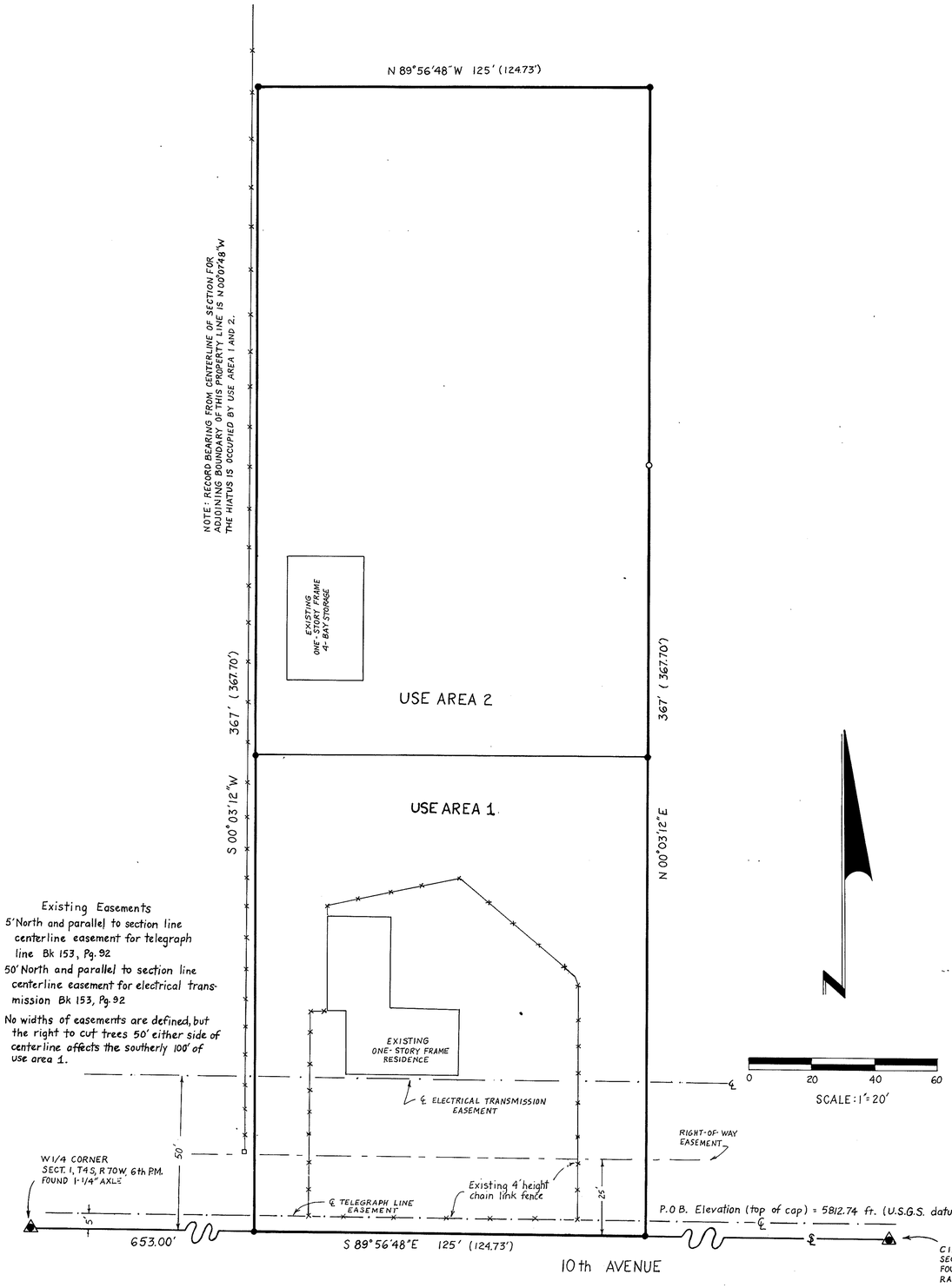

Existing Easements

5' North and parallel to section line centerline easement for telegraph line Bk 153, Pg. 92

50' North and parallel to section line centerline easement for electrical transmission Bk 153, Pg. 92

No widths of easements are defined, but the right to cut trees 50' either side of centerline affects the southerly 100' of use area 1.

LEGAL DESCRIPTION: A parcel of land in the SW 1/4 of the NW 1/4 of Section 1, Township 4 South, Range 70 West of the 6th Principal Meridian, deeded as the South 367 (367.70') feet of Tract 3, Burdick Heights Subdivision, and more particulary described as follows: Beginning at the W 1/4 corner of said section 1, thence S 89°56'48"E along the centerline of said Section 1 for a distance of 777.73 feet to a #5 rebar with aluminium cap stamped L.S. 24317, which is the true point of beginning; Thence N 00°03'12"E for a distance of 367' (367.70') to a point; thence N 89°56'48"W for a distance of 125 (124.73') feet to a point; thence S 00°03'12"W for a distance of 367 (367.70) feet to a point; thence S 89°56'48"E a distance of 125 (124.73) feet to the true point of beginning. Said parcel contains 1.05 acres, more or less.
All field measurements of the survey have been denoted in parenthesis.

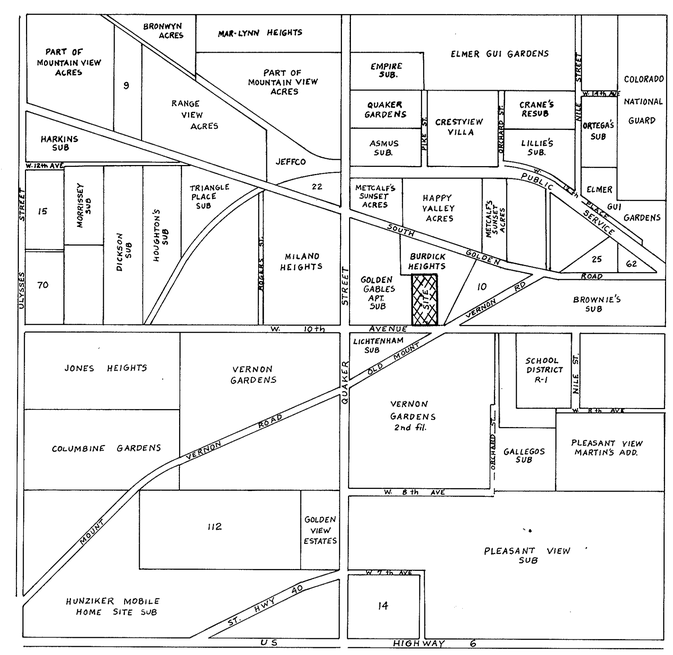

VICINITY MAP
SCALE: 1" = 600'

The hereon plan of the Planned Development Bettinger is approved and accepted by the Board of County Commissioners this 25 day of June, 1991

BOARD OF COUNTY COMMISSIONERS: L. P. Bonnel
Chairman

Joan Fitz-Gerald
Clerk
by Joan K. Card Deputy

Reviewed by the Jefferson County Planning Commission this 19th day of June, 1991

Donald E. Eikner
Chairman

Reviewed by Public Works Division
Date: JUNE 10, 1991 By: Jerry O'Neill

RECORDER'S CERTIFICATE:
ACCEPTED FOR FILING IN THE OFFICE OF THE COUNTY CLERK AND RECORDER OF JEFFERSON COUNTY AT GOLDEN, COLORADO ON THIS 27th DAY OF June, 1991 at 15:00 O'CLOCK P.M.

91056575
Reception Number

Joan Fitz-Gerald
JEFFERSON COUNTY CLERK AND RECORDER

By: Joan K. Card
Deputy Clerk

Standard Flexibility Statement:
The graphic drawings contained within this Official Development Plan are intended to depict general locations and illustrate concepts of the textual provisions of this Official Development Plan. In granting plat approval, the Board of County Commissioners may allow minor variations for the purpose of establishing:

a. Final road alignments
b. Final configuration of lot and tract sizes and shapes
c. Final building envelopes
d. Final access and parking locations
e. Landscaping adjustments

Applicability Statement:

Except as expressly provided otherwise in this Official Development Plan, development of this property shall conform to the Jefferson County Zoning Resolution in effect at the time of platting and building permit application.

Sheet 1 of 2

Unofficial

ODP BK 64 Pg. 59 Rec. #91056575

BETTINGER OFFICIAL DEVELOPMENT PLAN

WRITTEN RESTRICTIONS

1.) Permitted Uses :

A. Use Area 1 - this area shall contain one single family dwelling, together with normal residential accessory uses and structures (i.e., private garage)

B. Use Area 2 - this area shall permit a maximum of two storage buildings, with a maximum total GLA of 3000 s.f. Storage uses shall be limited to the storage of antique automobiles, parts for antique automobiles, and collectable items. Restoration and repair of antique automobiles and collectables shall be permitted, provided that the activity is limited to occur within the building, and that the repair is done by the building owner or leaseholder on their own antiques and collectables. No off-site employees will be permitted.

2.) Signs :

No signs shall be permitted, except for those signs permitted within the R-2 zone in the Jefferson County Zoning Resolution.

3) Fences :

A) Maximum fence height shall be six feet.

B.) Fence permits shall be required for any fence over 42" in height.

C) No fence over 42" in height shall be permitted within the southerly 48 feet of this Planned Development.

D) No barbed wire or electric fences shall be permitted.

4.) Parking :

A) Residential Uses - a minimum of two on site parking spaces shall be provided for each dwelling unit.

B) Storage Uses - a minimum of one space per 2000 s.f. GLA shall be provided on site.

5.) Lighting :

A.) Lights shall be permitted for residential and security use only. No exterior lighting (other than security lighting) shall be permitted in association with the storage uses.

B.) Maximum light height shall be 18 feet.

C.) No light shall cast a glare on adjacent properties or right-of-way.

6.) Building Standards :

A.) Maximum height of residential structures shall be 35 feet.

B.) Maximum height of accessory structures and storage buildings shall be 20 feet.

7.) Lot Standards :

A.) Maximum number of lots shall be two.

B.) Minimum lot size shall be 12,500 s.f.

C.) Minimum building setbacks shall be : front - 20 feet
rear - 20 feet
side - 10 feet

8.) Architectural Treatment :

A.) All buildings shall be residential in scale, charactor and finish. All buildings must have sloped gable-style roofs and painted or stained siding on the walls.

9.) General Provisions :

A.) No use shall be permitted that produces any noise, smell, vibration, or any other sensory impact that is perceptable and annoying from off-site.

B.) All oil, fluids, and other materials used in connection with restoration and repair activities shall be stored and disposed of in accordance with the requirements of the Jefferson County Health Department and the sanitation district.

C.) No exterior storage is permitted within Use Area 2.

Unofficial

SOUTH GOLDEN ROAD / MT. VERNON MIXED-USE OFFICIAL DEVELOPMENT PLAN

A PARCEL LOCATED IN THE SW 1/4 OF THE NW 1/4 OF SECTION 1, TOWNSHIP 4 SOUTH, RANGE 70 WEST OF THE 6TH PRINCIPAL MERIDIAN, COUNTY OF JEFFERSON, STATE OF COLORADO

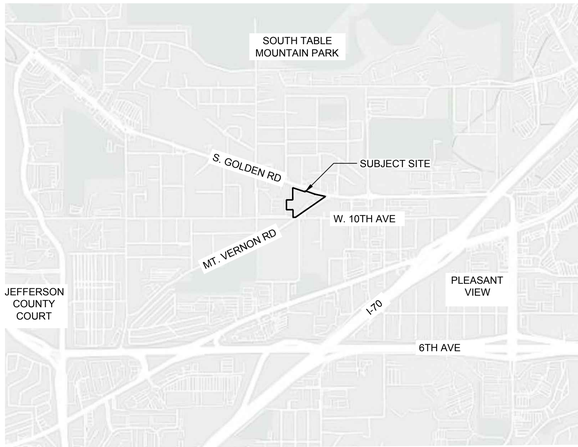

VICINITY MAP

NORTH

0 750 1500 3000
SCALE: 1"=1500'-0"

APPROVED FOR RECORDING

THIS OFFICIAL DEVELOPMENT PLAN, TITLED SOUTH GOLDEN ROAD / MT VERNON MIXED USE OFFICIAL DEVELOPMENT PLAN, WAS APPROVED

THE _____ DAY OF _____, _____. BY THE BOARD OF COUNTY COMMISSIONERS OF THE COUNTY OF JEFFERSON, STATE OF COLORADO AND IS APPROVED FOR RECORDING.

THE OWNER OF THE PROPERTY AT THE TIME OF APPROVAL WAS PETRIFIED TREE, LLC, A COLORADO LIMITED LIABILITY COMPANY AND TALK TO THE HAND, LLC, A COLORADO LIMITED LIABILITY COMPANY.

BY: JEFFERSON COUNTY PLANNING AND ZONING DIRECTOR

SIGNATURE: _____

DATE: _____

CLERK AND RECORDER'S CERTIFICATE

ACCEPTED FOR FILING IN THE OFFICE OF THE COUNTY CLERK AND RECORDER OF JEFFERSON COUNTY AT GOLDEN, COLORADO

ON THIS _____ DAY OF _____, _____.

BY: _____ _____
JEFFERSON COUNTY CLERK AND RECORDER — DEPUTY CLERK

STANDARD FLEXIBILITY STATEMENT

THE GRAPHIC DRAWINGS CONTAINED WITHIN THIS OFFICIAL DEVELOPMENT PLAN ARE INTENDED TO DEPICT GENERAL LOCATIONS AND ILLUSTRATE CONCEPTS OF THE TEXTUAL PROVISIONS OF THIS OFFICIAL DEVELOPMENT PLAN. DURING THE SITE DEVELOPMENT PLAN PROCESS THE PLANNING AND ZONING DIRECTOR MAY ALLOW MINOR VARIATIONS FOR THE PURPOSE OF ESTABLISHING:

A. FINAL ROAD ALIGNMENTS
B. FINAL CONSTRUCTION OF IMPROVEMENTS
C. FINAL BUILDING ENVELOPES
D. FINAL ACCESS AND BUILDING LOCATIONS
E. LANDSCAPE ADJUSTMENTS

APPLICABILITY STATEMENT

EXCEPT AS EXPRESSLY PROVIDED OTHERWISE IN THIS OFFICIAL DEVELOPMENT PLAN, DEVELOPMENT OF THIS PROPERTY SHALL CONFORM TO THE JEFFERSON COUNTY ZONING RESOLUTION IN EFFECT AT THE TIME OF PLATTING, SITE DEVELOPMENT PLAN, AND/OR BUILDING PERMIT APPLICATION. IN THE EVENT A STANDARD OR DEFINITION IS IN CONFLICT, THE STANDARD OR DEFINITION IN THIS OFFICIAL DEVELOPMENT PLAN SHALL GOVERN.

LEGAL DESCRIPTION (16129 WEST 10TH AVENUE)

LOT 2A, BURDICK HEIGHTS EXEMPTION SURVEY NO.1 ADJUSTMENT 1, A REVISION TO LOT 2, BURDICK HEIGHTS EXEMPTION SURVEY NO. 1, LOCATED IN THE NW 1/4 OF SECTION 1, TOWNSHIP 4 SOUTH, RANGE 70 WEST, OF THE 6TH P.M., PER THE MAP RECORDED JULY 10, 2007, AT RECEPTION NO. 2007080061, DESCRIBED AS FOLLOWS:

LOT 2, BURDICK HEIGHTS EXEMPTION SURVEY NO.1, MORE PARTICULARLY DESCRIBED AS FOLLOWS:

A PARCEL LOCATED IN THE SW 1/4 OF THE NW 1/4 SECTION 1, TOWNSHIP 4 SOUTH, RANGE 70 WEST OF THE 6TH PRINCIPAL MERIDIAN, PER MAP RECORDED JUNE 19, 1991 IN PLAT BOOK 106 AT PAGE 30 AS RECEPTION NUMBER 91053181, DESCRIBED AS FOLLOWS:

COMMENCING AT THE W 1/4 CORNER OF SAID SECTION 1, THENCE N89°58'14"E, ALONG THE SOUTH LINE OF THE NW 1/4 OF SAID SECTION 1, A DISTANCE OF 653.11 FEET; THENCE CONTINUING N89°58'14"E, A DISTANCE OF 124.65 FEET; THENCE N00°01'21"W, A DISTANCE OF 25.00 FEET TO THE SE CORNER OF LOT 1, BURDICK HEIGHTS EXEMPTION SURVEY NO. 1; THENCE N00°01'21"W, ALONG THE EAST LINE OF LOT 1, BURDICK HEIGHTS EXEMPTION SURVEY NO.1, A DISTANCE OF 127.94 FEET TO THE SE CORNER OF LOT 2, BURDICK HEIGHTS EXEMPTION SURVEY NO.1 AND THE TRUE POINT OF BEGINNING;
THENCE N00°01'21"W, ALONG THE EAST LINE OF SAID LOT 2, A DISTANCE OF 214.71 FEET TO THE NE CORNER OF SAID LOT2;
THENCE S89°59'43"W, ALONG THE NORTH LINE OF SAID LOT 2, A DISTANCE OF 124.77 FEET TO THE NW CORNER OF SAID LOT 2;
THENCE S00°02'27"E, ALONG THE WEST LINE OF SAID LOT 2, A DISTANCE OF 214.80 FEET TO THE SW CORNER OF SAID LOT 2;
THENCE N89°57'16"E, ALONG THE SOUTH LINE OF SAID LOT 2, A DISTANCE OF 124.70 FEET TO THE TRUE POINT OF BEGINNING.

TOGETHER WITH A 25 FOOT EASEMENT FOR INGRESS AND EGRESS, BEING THE WESTERLY 25 FEET OF LOT 1, BURDICK HEIGHTS EXEMPTION SURVEY NO. 1, PER THE MAP RECORDED JUNE 19, 1991 IN BOOK 106 AT PAGE 30, AS RECEPTION NUMBER 91053181
COUNTY OF JEFFERSON, STATE OF COLORADO.

LEGAL DESCRIPTION (16005 MT VERNON ROAD)

BEGINNING AT A POINT 793 FEET EAST OF THE SOUTHWEST CORNER OF THE NW 1/4 SECTION 1, TOWNSHIP 4 SOUTH, RANGE 70 WEST; THENCE 3/4THS OF A FOOT EAST; THENCE NORTHEASTERLY 706 FEET TO EAST LINE OF SW 1/4 NW 1/4 ; THENCE NORTHWESTERLY ALONG SOUTH GOLDEN ROAD 284 FEET; THENCE SOUTHWESTERLY 609 FEET TO POINT OF BEGINNING.

ALSO: COMMENCING 793 FEET EAST OF SOUTHWEST CORNER OF NW $\frac{1}{4}$, SECTION 1, TOWNSHIP 4 SOUTH, RANGE 70 WEST, THENCE NORTHEASTERLY 706 FEET TO THE EAST LINE OF SW 1/4 NW 1/4; THENCE EASTERLY ALONG SOUTH SIDE OF SOUTH GOLDEN ROAD, 171 FEET TO INTERSECTION OF MOUNT VERNON ROAD AND SOUTH GOLDEN ROAD, THENCE SOUTHWESTERLY ALONG THE NORTHWESTERLY SIDE OF MOUNT VERNON ROAD TO THE SOUTH LINE OF THE NW 1/4 OF SECTION 1; THENCE WEST 38 FEET TO PLACE OF BEGINNING. COUNTY OF JEFFERSON, STATE OF COLORADO. (REC. NO.F0316415)

EXCEPT THAT PARCEL DESCRIBED IN RECEPTION NO. 2013090817.

LEGAL DESCRIPTION (16100 SOUTH GOLDEN ROAD)

LOTS 1 AND 2, MORE CORRECTLY KNOWN AS TRACTS 1 AND 2, BURDICK HEIGHTS, EXCEPT THE NORTHERLY 20 FEET OF SAID LOTS 1 AND 2, BURDICK HEIGHTS, AND EXCEPT THAT PORTION MORE PARTICULARLY DESCRIBED AS FOLLOWS:

A TRACT OF LAND IN THE NORTHWEST QUARTER OF SECTION 1, TOWNSHIP 4 SOUTH, RANGE 70 WEST OF THE 6TH P.M., MORE PARTICULARLY DESCRIBED AS FOLLOWS:

BEGINNING AT A POINT 778.25 FEET EAST OF THE SOUTHWEST CORNER OF THE NORTHWEST QUARTER OF SECTION 1, TOWNSHIP 4 SOUTH, RANGE 70 WEST;
THENCE N0°10'W A DISTANCE OF 247.73 FEET;
THENCE S86°59'E A DISTANCE OF 124.46 FEET;
THENCE S24°23'W A DISTANCE OF 264.80 FEET TO THE SOUTH LINE OF THE NORTHWEST QUARTER OF SECTION 1;
THENCE WEST A DISTANCE OF 14.25 FEET, MORE OR LESS, ALONG THE SOUTH LINE OF THE NORTHWEST QUARTER OF SECTION 1 TO THE POINT OF BEGINNING
COUNTY OF JEFFERSON, STATE OF COLORADO.

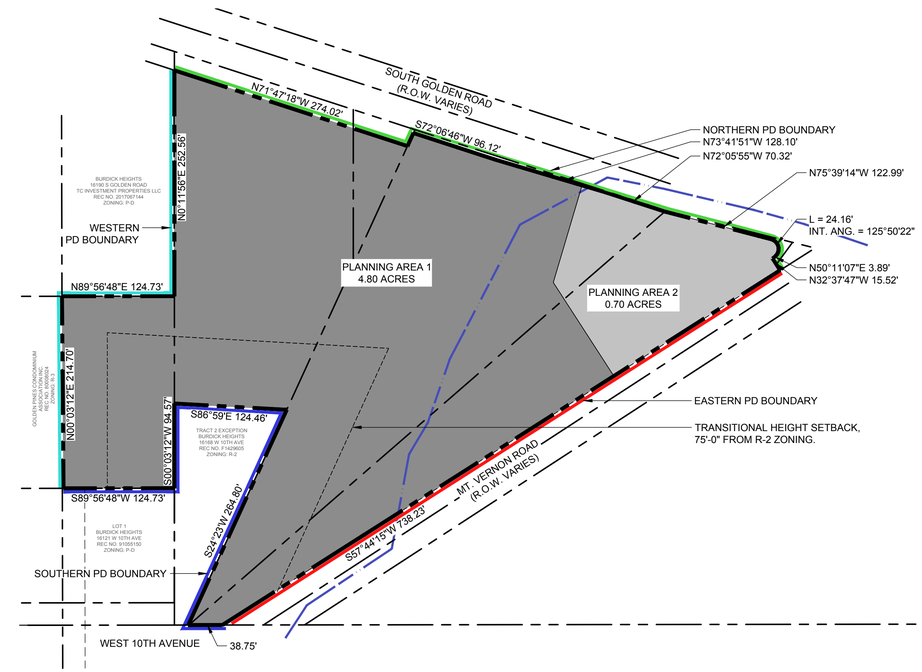

NORTH

0 40 80 160
SCALE: 1"=80'-0"

STATEMENT OF INTENT

THE PURPOSE OF THE SOUTH GOLDEN ROAD / MT VERNON ROAD MIXED USE OFFICIAL DEVELOPMENT PLAN IS TO ALLOW FOR THE CREATION OF A MIXED USE PROJECT WITH GROUND FLOOR COMMERCIAL ADJACENT TO SOUTH GOLDEN ROAD AND MULTIFAMILY RESIDENTIAL ABOVE. MULTIFAMILY RESIDENTIAL WILL ALSO BE ALLOWED ON THE GROUND FLOOR SO LONG AS IT DOES NOT FACE PUBLIC RIGHT OF WAY. THE GROUND FLOOR COMMERCIAL AND HIGH DENSITY RESIDENTIAL WILL FOLLOW THE INTENT OF THE CENTRAL PLAINS AREA PLAN AND DIRECTION FOR THIS AREA TO BE AN "ACTIVITY CENTER" ALONG THE MAJOR COLLECTOR STREET. THESE LAND USES WILL ENABLE AN EFFICIENT INFILL DEVELOPMENT THAT REDUCES SPRAWL, ADDS ADDITIONAL COMMERCIAL USES, PROVIDE HOUSING ADJACENT TO EXISTING EMPLOYMENT, AND UTILIZE EXISTING TRANSIT INFRASTRUCTURE. THE ROCK REST LODGE WILL REMAIN AS PART OF ANY DEVELOPMENT EFFORT ASSOCIATED WITH THIS OFFICIAL DEVELOPMENT PLAN.

LEGEND

- PLANNED DEVELOPMENT BOUNDARY
- EXISTING LOT LINE
- TRANSITIONAL HEIGHT SETBACK
- EXISTING 100-YEAR FLOODPLAIN

FLOODPLAIN NOTE:

1. ANY MAN-MADE CHANGE TO IMPROVED OR UNIMPROVED REAL ESTATE, INCLUDING BUT NOT LIMITED TO BUILDINGS OR OTHER STRUCTURES, MINING, DREDGING, FILLING, GRADING, PAVING, EXCAVATION OR DRILLING OPERATIONS IS NOT PERMITTED WITHIN THE 100-YEAR FLOODPLAIN UNLESS A FLOODPLAIN DEVELOPMENT DEVELOPMENT PERMIT PURSUANT TO THE FLOODPLAIN SECTION OF THE JEFFERSON COUNTY ZONING RESOLUTION IS FIRST OBTAINED.

S. GOLDEN ROAD / MT VERNON MIXED-USE

REZONING APPLICATION

JEFFERSON COUNTY, CO

PREPARED BY:

ripleydesign
LANDSCAPE ARCHITECTURE, LAND PLANNING
419 Canyon Ave. Suite 200 Fort Collins, CO 80521
phone 970.224.5828 | fax 970.225.6657 | www.ripleydesigninc.com

LANDSCAPE ARCHITECT | LAND PLANNER
RIPLEY DESIGN INC.
Joel Weikert
419 Canyon Ave. Suite 200
Fort Collins, CO 80521
p. 970.224.5828

OWNER | APPLICANT
PETRIFIED TREE, LLC AND TALK TO THE HAND, LLC

Phil Hodgkinson
1776 Platte St.
Denver, CO 80202
p. 970.402.8244

ARCHITECT
VFLA ARCHITECTURE + INTERIORS
Jeff Fleischer
419 Canyon Ave. Suite 200
Fort Collins, CO 80521
p. 970.224.1191

ENGINEER
CENTERPOINT ENGINEERING
Matt Buono
1626 Cole Boulevard, Suite 125
Lakewood, CO 80401
p. 303.895.1671

ORIGINAL SIZE 24X36

ISSUED

No.	DESCRIPTION	DATE
01	REZONE	08.10.2023
02	RESUBMITTAL	11.20.2023
03	RESUBMITTAL	03.27.2024
04	FOR HEARING	06.19.2024

REVISIONS

No.	DESCRIPTION	DATE

OFFICIAL DEVELOPMENT PLAN

SEAL:

ENTITLEMENT DRAWINGS NOT FOR CONSTRUCTION

PROJECT No.:	R22-045.1
DRAWN BY:	JW
REVIEWED BY:	RL

DRAWING NUMBER:

1 OF 2

SOUTH GOLDEN ROAD / MT. VERNON MIXED-USE
OFFICIAL DEVELOPMENT PLAN

A PARCEL LOCATED IN THE SW 1/4 OF THE NW 1/4 OF SECTION 1, TOWNSHIP 4 SOUTH, RANGE 70 WEST OF THE 6TH PRINCIPAL MERIDIAN, COUNTY OF JEFFERSON, STATE OF COLORADO

WRITTEN RESTRICTIONS

1. RESIDENTIAL DENSITY CAN BE NO GREATER THAN 36 DWELLING UNITS / GROSS ACRE FOR THE PLANNED DEVELOPMENT.
2. PLANNING AREA #1
   - A. PERMITTED USES
     1. MULTI-FAMILY DWELLINGS
     2. TOWNHOMES
     3. GENERAL RETAIL
     4. BUSINESS AND PROFESSIONAL OFFICE
     5. SERVICE ESTABLISHMENT
   - B. PERMITTED ACCESSORY STRUCTURES
     1. PRIVATE GARAGE, MINI STRUCTURE, STORAGE SHED, EXISTING STONE ARCH
   - C. LOT AND BUILDING STANDARDS
     1. BUILDING(S) SHALL BE MIXED-USE, WITH GROUND FLOOR COMMERCIAL FACING SOUTH GOLDEN ROAD; GROSS LEASABLE AREA FOR COMMERCIAL SHALL BE LIMITED TO 8,400 SF. THE REMAINING GROUND FLOOR AREA FACING WEST, EAST AND SOUTH TO ADJACENT PROPERTIES, MAY BE USED FOR RESIDENTIAL DWELLINGS AND/ OR USES THAT SUPPORT MULTIFAMILY RESIDENTIAL (SUCH AS LOBBY, MAIL ROOM, LEASING OFFICE, ETC.)
     2. MAXIMUM BUILDING HEIGHT: 75'-0" FOR PRINCIPAL BUILDINGS.
        - a. FLOORS ABOVE THE SECOND STORY SHALL BE STEPPED BACK A MINIMUM OF FIVE (5) FEET FROM THE FIRST TWO STORIES AND MAINTAIN THE STEP BACK (VERTICALLY) AT EACH FLOOR ABOVE THE SECOND STORY. BALCONIES AND DECKS FOR UNITS ABOVE THE SECOND FLOOR MAY ENCROACH INTO THE STEP BACK.
        - b. ANY FLOOR ABOVE 60'-0" IN HEIGHT SHALL BE STEPPED BACK A MINIMUM DEPTH OF TWENTY-FIVE (25) FEET FROM THE IMMEDIATE STORY BELOW WHEN FRONTING ALONG THE NORTHERN PD BOUNDARY, WESTERN PD BOUNDARY, OR PLANNING AREA #2 AND WHEN LOCATED AT PREDOMINANT CORNERS OF THE BUILDING'S MASSING. STEP BACK PROVIDED SHALL SPAN HORIZONTAL LENGTHS NO FEWER THAN TWENTY (20) FEET AND NO LARGER THAN EIGHTY (80) FEET IN LENGTH. THE INTENT OF THE STEP BACK IS TO REDUCE THE ARCHITECTURAL PRESENCE OF THE PRINCIPAL BUILDING FROM THE PEDESTRIAN'S VIEW, PROVIDE OPPORTUNITY FOR INTENSIVE AND EXTENSIVE GREEN ROOFS, AND PROVIDE OPPORTUNITY FOR COMMUNAL AMENITIES.
        - c. A TRANSITIONAL HEIGHT SETBACK SHALL BE PROVIDED WHERE THE PLANNED DEVELOPMENT IS ADJACENT TO R-2 ZONING. THE TRANSITIONAL HEIGHT SETBACK SHALL BE 75'-0" FROM THE P-D BOUNDARY AS SHOWN ON SHEET 1 OF THE ODP. THE MAXIMUM BUILDING HEIGHT WITHIN THE TRANSITIONAL HEIGHT SETBACK IS 35'-0".
     3. MAXIMUM NUMBER OF DWELLING UNITS: 200
     4. MINIMUM BUILDING SETBACKS
        - a. FROM THE NORTH PD BOUNDARY: 25'-0"
        - b. FROM THE WEST PD BOUNDARY: 25-0"
        - c. FROM THE SOUTH PD BOUNDARY: 25-0"
        - d. FROM ANY PRINCIPAL BUILDING IN PLANNING AREA #2: 50'-0"
     5. MINIMUM BUILDING SETBACKS FOR ACCESSORY STRUCTURES
        - a. FROM NORTH PD BOUNDARY: 40'-0"
        - b. FROM WEST PD BOUNDARY: 10'-0"
        - c. FROM SOUTH PD BOUNDARY: 10'-0"
        - d. FROM EAST PD BOUNDARY: 40'-0"
        - e. THE EXISTING STONE ARCH, LOCATED ALONG MT VERNON ROAD, IS EXEMPT FROM THESE SETBACK STANDARDS IF RETAINED IN FUTURE DEVELOPMENT APPLICATIONS.
     6. LOT SIZE: THERE IS NO MINIMUM LOT SIZE FOR THIS PLANNING AREA.
3. PLANNING AREA #2
   - A. PERMITTED USES
     1. RESTAURANTS AND TAVERNS, EXCLUDING DRIVE- THRU AND FAST FOOD
   - B. ACCESSORY USES
     1. PRIVATE GARAGE, MINI STRUCTURE, STORAGE SHED
   - C. LOT AND BUILDING STANDARDS
     1. MAXIMUM BUILDING HEIGHT: 35'-0"
     2. MINIMUM BUILDING SETBACKS
        - a. FROM NORTH PD BOUNDARY: 25'-0"
        - b. FROM EAST PD BOUNDARY: 25'-0"
        - c. EXEMPTIONS:
          1. EXISTING DECKS AND PATIOS AT OR BELOW 2'-6" FROM THE GROUND ARE EXEMPT FROM PROPOSED SETBACK STANDARDS.
     3. LOT SIZE: THERE IS NO MINIMUM LOT SIZE FOR THIS PLANNING AREA.
4. LANDSCAPING
   - A. PERIMETER LANDSCAPING STANDARDS
     1. NORTHERN PD BOUNDARY
        - a. PERIMETER LANDSCAPE WIDTH: 20'-0"; PLANNING AREA #2 HAS NO MINIMUM WIDTH.
        - b. LANDSCAPE REQUIREMENTS:
          1. ONE (1) TREE PER 30 LINEAR FEET OF PERIMETER, EXCLUDING DRIVE AISLES.
          2. EIGHT (8) SHRUBS PER 500 SQUARE FEET OF LANDSCAPE AREA.
          3. THREE (3) ORNAMENTAL GRASSES OR LARGE PERENNIALS MAY BE SUBSTITUTED PER SHRUB, UP TO 50% OF THE REQUIREMENT.
          4. NO LESS THAN 25% OF THE TOTAL REQUIRED PLANT MATERIALS SHALL BE EVERGREEN.
     2. EASTERN PD BOUNDARY
        - a. PERIMETER LANDSCAPE WIDTH: 10'-0"; PLANNING AREA #2 HAS NO MINIMUM WIDTH.
          1. THE PERIMETER LANDSCAPE WIDTH CAN BE REDUCED TO 6'-0" WHEN A FIVE (5) FOOT TALL FENCE OR WALL IS PROVIDED IN PERIMETER LANDSCAPE AREA AND LANDSCAPE REQUIREMENTS (DETAILED IN 4.A.2.b) ARE MET.
        - b. LANDSCAPE REQUIREMENTS:
          1. ONE (1) TREE PER 30 LINEAR FEET OF PERIMETER, EXCLUDING DRIVE AISLES.
          2. EIGHT (8) SHRUBS PER 500 SQUARE FEET OF LANDSCAPE AREA.
          3. THREE (3) ORNAMENTAL GRASSES OR LARGE PERENNIALS MAY BE SUBSTITUTED PER SHRUB, UP TO 50% OF THE REQUIREMENT.
          4. NO LESS THAN 25% OF THE TOTAL REQUIRED PLANT MATERIALS SHALL BE EVERGREEN.
     3. SOUTHERN PD BOUNDARY
        - a. PERIMETER LANDSCAPE WIDTH: 10'-0"
          1. THE PERIMETER LANDSCAPE WIDTH CAN BE REDUCED TO 5'-0" WHEN A SIX (6) FOOT TALL FENCE OR WALL IS PROVIDED IN PERIMETER LANDSCAPE AREA AND LANDSCAPE REQUIREMENTS (DETAILED IN 4.A.3.b) ARE MET.
        - b. LANDSCAPE REQUIREMENTS:
          1. ONE (1) TREE PER 30 LINEAR FEET OF PERIMETER SHALL BE PROVIDED.
             - a. PERIMETER LANDSCAPE MAY BE REDUCED TO 5'-0" PROVIDED THE FOLLOWING CONDITIONS ARE MET.
               - i. ONE (1) COLUMNAR EVERGREEN TREE SHALL BE PROVIDED PER 10 LINEAR FEET OF PERIMETER; THIS ENHANCED REQUIREMENT SUPERCEDES THE ONE TREE PER 30 LINEAR FEET REQUIREMENT FOR THE CONDITION DESCRIBED.
               - ii. COLUMNAR EVERGREEN TREES SPECIFIED MUST REACH A MINIMUM HEIGHT OF 10'. COLUMNAR EVERGREEN TREES MAY INCLUDE THE FOLLOWING:
                 1. JUNIPERUS CHINENSIS CULTIVARS
                 2. JUNIPERUS SCOPULORUM CULTIVARS
                 3. PICEA ABIES CULTIVARS
                 4. PICEA PUNEGNS CULTIVARS
                 5. PINUS SPECIES
          2. EIGHT (8) SHRUBS PER 500 SQUARE FEET OF LANDSCAPE AREA.
          3. THREE (3) ORNAMENTAL GRASSES OR LARGE PERENNIALS MAY BE SUBSTITUTED PER SHRUB, UP TO 50% OF THE REQUIREMENT.
          4. NO LESS THAN 50% OF THE TOTAL REQUIRED SHRUB AND GROUND COVER PLANT MATERIALS SHALL BE EVERGREEN.
     4. WESTERN PD BOUNDARY
        - a. PERIMETER LANDSCAPE WIDTH: 10'-0"
        - B. LANDSCAPE REQUIREMENTS:
          1. ONE (1) TREE PER 30 LINEAR FEET OF PERIMETER.
          2. EIGHT (8) SHRUBS PER 500 SQUARE FEET OF LANDSCAPE AREA.
          3. THREE (3) ORNAMENTAL GRASSES OR LARGE PERENNIALS MAY BE SUBSTITUTED PER SHRUB, UP TO 50% OF THE REQUIREMENT.
          4. NO LESS THAN 25% OF THE TOTAL REQUIRED PLANT MATERIALS SHALL BE EVERGREEN.
     5. THE PERIMETER LANDSCAPING WIDTH REQUIREMENTS MAY BE SATISFIED WITH CONCRETE OR PAVER PLAZAS WHEN ABUTTING THE GROUND FLOOR OF ANY BUILDING AND ADJACENT TO PUBLIC RIGHT OF WAY. THE INTENT OF THIS EXCEPTION IS TO PROMOTE THE CREATION OF VIBRANT STREETSCAPES AND ENHANCE THE PEDESTRIAN EXPERIENCE AT THE PLANNED DEVELOPMENT. THE EXCEPTION FOR PERIMETER LANDSCAPING WIDTH SHALL NOT REDUCE THE PLANTING REQUIREMENTS FOR PD BOUNDARIES WHEN COMPARED TO A LANDSCAPE WIDTH THAT WOULD STRICTLY CONSIST OF LANDSCAPE BED; EQUIVALENT PLANT QUANTITIES SHALL BE PROVIDED.
     6. EXISTING DECKS IN PLANNING AREA #2 MAY ENCROACH INTO THE PERIMETER LANDSCAPE WIDTH.
   - B. PLAZAS AND DECKS MAY CONTAIN THE FOLLOWING AMENITIES:
     1. PATIO SEATING FOR PUBLIC USE
     2. SIDEWALKS AND ACCESSIBLE RAMPS
     3. COVERED AND UNCOVERED PORCHES
     4. FENCING AND WALLS
     5. PLANTERS CONTAINING REQUIRED STREET TREES AND SHRUBS
     6. STREET FURNITURE
     7. ORNAMENTAL SITE LIGHTING
   - C. MINIMUM LANDSCAPE COVERAGE : 20% OF THE PLANNED DEVELOPMENT
     1. AT LEAST 75% OF THE REQUIRED LANDSCAPED AREA SHALL BE COMMON USABLE AREA. COMMON USABLE AREA SHALL BE DEFINED, IN THIS PLANNED DEVELOPMENT, AS AND AREA THAT IS AVAILABLE FOR USE BY MORE THAN ONE PERSON.
     2. 40% OF THE TOTAL SF OF COMMON USABLE AREA SHALL CONSIST OF COMMUNAL AMENITIES.
        - a. PLAZAS AND AMENITY DECKS (ABOVE THE GROUND LEVEL) RECEIVE DOUBLE THE SF CREDIT TOWARD COMMUNAL AMENITIES.
        - b. COMMUNAL AMENITIES CONSISTS OF THE FOLLOWING:
          1. LAWN
          2. PLAZAS
          3. HARDSCAPE AREAS (NOT INCLUDING DRIVES AND PARKING)
          4. AMENITY SPACES
             - a. DOG PARK
             - b. ROOF DECK
             - c. COVERED ROOFTOP AMENITY
             - d. FITNESS (UNCOVERED AND COVERED)
          5. POOLS AND OTHER SIMILAR AMENITY SPACES
5. OFF-STREET PARKING
   - A. PARKING SHALL BE IN ACCORDANCE WITH THE JEFFERSON COUNTY ZONING RESOLUTION, EXCEPT AS SUPPLEMENTED OR MODIFIED BELOW.
   - B. RESIDENTIAL PARKING REQUIREMENTS (VEHICULAR)
     1. STUDIO UNITS: 1 PARKING SPACE / UNIT
     2. ONE BEDROOM UNITS: 1.25 SPACES / UNIT
     3. TWO BEDROOM UNITS: 2 SPACES / UNIT
     4. THREE BEDROOM UNITS OR LARGER: 2.5 SPACES/ UNIT
     5. GUEST PARKING: 0.25 SPACES/ UNIT
   - C. EXISTING COMMERCIAL (ROCK REST LODGE) PARKING REQUIREMENTS (VEHICULAR)
     1. TEN (10) SPACES / 1,000 SF OF GROSS FLOOR AREA
   - D. PROPOSED COMMERCIAL PARKING REQUIREMENTS (VEHICULAR)
     1. GENERAL RETAIL: 4 SPACES / 1,000 SF OF GFA
     2. BUSINESS/ PROFESSIONAL OFFICE: 4 SPACES / 1,000 SF OF GFA
     3. SERVICE ESTABLISHMENT: 4 SPACES / 1,000 SF OF GFA
   - E. MOTORCYCLE PARKING SPACES
     1. STANDARD VEHICULAR PARKING SPACES MAY BE SUBSTITUTED FOR MOTORCYCLE PARKING STALLS SO LONG AS THE TOTAL MOTORCYCLE PARKING DOES NOT EXCEED MORE THAN 7% OF THE TOTAL SPACES PROVIDED ON SITE.
   - F. VEHICULAR PARKING STALL DIMENSIONS
     1. STANDARD VEHICULAR STALL: 9'-0" W x 18'-0" L
     2. COMPACT PARKING STALL: 8'-0" W x 15'-0" L
     3. MOTORCYCLE PARKING STALL: 4'-6" W x 8'-0" L
   - G. SHARED VEHICULAR PARKING MAY BE PROPOSED AT THE SITE DEVELOPMENT PLAN APPLICATION.
   - H. ON-STREET PARKING ALONG THE EASTERN PD BOUNDARY MAY COUNT TOWARD PARKING REQUIREMENTS.
6. ARCHITECTURE
   - A. THE ARCHITECTURAL INTENT IS TO UTILIZE, AT A BASIC LEVEL, GENERAL EXTERIOR ELEVATION MATERIALS THAT ARE OF THE FOLLOWING DESCRIPTIONS AND GENERALLY BASED ON THE EXISTING BUILDING IN PLANNING AREA #2:
     1. NATURAL STONE EXTERIOR MATERIALS, WOOD AESTHETICS BOTH IN A HORIZONTAL AND VERTICAL ORIENTATION, VARIATION IN ROOF FORMS, BOTH PRIMARY AND SECONDARY, METAL ACCENTS AS PANELS AND TRIMS, ARTICULATION OF OVERALL BUILDING MASSES.
   - B. COMPATIBILITY SHALL BE ACHIEVED THROUGH ARCHITECTURAL TECHNIQUES SUCH AS VARIATION IN BOTH THE PRIMARY AND SECONDARY ROOF LINES, BUILDING MASS PROPORTION SYSTEMS THAT WORK WITH THE OVERALL DESIGN AESTHETIC, HUMAN SCALED ARCHITECTURAL FEATURES AT THE STREET LEVEL, AND BUILDING COLORS OF THAT RELATE TO THE VEGETATION AND SELECT ARCHITECTURE OF THE AREA.
   - C. THE USE OF PRIMARY EXTERIOR WALL FINISH MATERIALS THAT EITHER RESEMBLE OR ARE THE NATURAL MATERIALS SUCH AS THE FOLLOWING ARE ACCEPTABLE, BUT NOT LIMITED TO:
     1. BRICK, STONE, NATURAL STUCCO, WOOD OR WOOD-LIKE PRODUCTS THAT APPEAR NATURAL IN NATURE, STEEL, CONCRETE, TEXTURED CONCRETE, PRE-FINISHED METALS, AND PAINTED OR STAINED HORIZONTAL CEMENT BOARD.
   - D. BUILDING EXTERIORS SHALL INCORPORATE MATERIALS AS NOTED IN 6.C.1 AND COLORS THAT ARE NOTED IN SECTION 6.E.1. EXTERIOR BUILDING MATERIAL COLORS SHALL NOT BE HIGHLY REFLECTIVE OR PRIMARY IN COLOR. COLOR PALETTES SHALL BE COMPLIMENTARY WITHIN THEMSELVES AND GENERALLY RELATE TO THE AREA.
     1. PRIMARY EXTERIOR MATERIALS THAT ARE UNACCEPTABLE INCLUDE, BUT ARE NOT LIMITED TO THE FOLLOWING:
        - a. SYNTHETIC STUCCO, CONCRETE BLOCK, CONCRETE PANELS, TILT-UP CONCRETE
   - E. THE COLOR PALETTE WILL RELATE TO THE COLORS THAT ARE TYPICAL TO THE GRASSES, WOODS, ROCKS AND SOIL OF THE COLORADO FOOTHILLS AS WELL AS THE NATURAL SETTING OF JEFFERSON COUNTY. GENERALLY, THE PREDOMINATE COLORS WILL INCLUDE THE FOLLOWING:
     1. SOFT BROWNS, MUTED GRAYS, IRON GRAYS, AMBERS, MUTED GREENS AND GOLDS, BUFFS, TERRA COTTA, RUSTS, OFF WHITES/BEIGE
     2. ACCENT AND TRIM COLORS WILL COMPLIMENT THE OVERALL COLOR PALETTE OF THE NEW DEVELOPMENT
        - a. VISUALLY STRONGER, HEAVY MATERIALS WILL BE UTILIZED AT THE LOWER LEVELS OF THE BUILDING.
   - F. MAIN FLOOR DWELLING UNITS THAT FACE OUTWARD TO THE PROPERTY LINES OR TOWARDS THE STREETS WILL CONTAIN MAIN ENTRIES FROM BOTH THE EXTERIOR SIDEWALK LEVEL OF SERVICE AND FROM STRUCTURED PARKING LEVELS (IF APPLICABLE).
     1. THE ARCHITECTURAL ELEMENTS AND OVERALL FAÇADE TREATMENT WILL BE DEVELOPED TO CREATE A 360-DEGREE ARCHITECTURE CONSISTENT WITH THE OVERALL ARCHITECTURAL DESIGN AESTHETIC. ADDITIONAL TECHNIQUES MAY BE APPLIED TO MINOR PORTIONS OF THE ARCHITECTURE THAT ARE NOT DIRECTLY PART OF THE OVERALL DESIGN SUCH AS SCREENS THAT ARE BOTH HORIZONTAL OR VERTICAL IN NATURE. VERTICAL OR HORIZONTAL SUNSHADES MAY ALSO BE EMPLOYED IN THE DESIGN AESTHETIC.
     2. ENTRANCES (EXCLUDING SERVICE DOORS) INTO BUILDINGS SHALL BE IDENTIFIABLE THROUGH BUILDING DESIGN TECHNIQUES INCLUDING THE USE OF RECESSED OR PROJECTED ENTRYWAYS, DIFFERENTIATED ROOF LINES IN BOTH STYLE AND MATERIAL, AS WELL AS MATERIAL CHANGES OR COLOR SHIFTS.
     3. EXTERIOR WALL ARTICULATION IN THE PLAN OVER 60 FEET WILL CONTAIN A SURFACE PLANE SHIFT AS ADEQUATE AND RELATED TO THE OVERALL ARCHITECTURAL DESIGN AESTHETIC. GENERALLY, THESE SHIFTS WILL EMPLOY MATERIAL CHANGES AND PROJECTIONS THAT ARE RELATABLE TO EACH OTHER. THESE SHIFTS MAY INCLUDE, BUT ARE NOT LIMITED TO THE FOLLOWING:
        - a. COLUMNS, SHADING DEVICES, PILASTERS, FENESTRATION PATTERNS, RECESSES/PROJECTIONS, MATERIAL CHANGES, COLORS
     4. FACADES FACING STREETS OR CONNECTING A PEDESTRIAN LINK SHALL BE SUBDIVIDED USING FEATURES INCLUDING, BUT NOT LIMITED TO, THE FOLLOWING:
        1. WINDOWS/DOORS, ENTRANCES, RECESSES/PROJECTIONS, ARCADES, ARBORS, AWNINGS, PLANTERS, LOW SITE WALLS
     5. FIRST FLOOR FACADES RELATED TO COMMERCIAL OCCUPANCIES WILL UTILIZE GLAZING TO THE FINISHED FLOOR. SITE CONDITIONS MAY PREVAIL AND CREATE A CONDITION IN WHICH GLAZING TO THE FINISHED FLOOR MAY NOT BE ATTAINABLE.
     6. BUILDING MATERIALS SHALL CONTINUE BUT NOT BE LIMITED TO, AT A MINIMUM, SURFACE MATERIAL PLANE ALIGNMENTS VERTICALLY TO THE SECOND FLOOR OF THE OVERALL DEVELOPMENT UNLESS THE ARCHITECTURAL DESIGN AESTHETIC PROHIBITS THIS AS A DESIGN BASIS. PITCHED ROOFS, HORIZONTAL, LOW SLOPE ROOFS WITH FASCIA TRIM, SKYWINDOWS, EYEBROWS, ETC. DO NOT COUNT IN THE OVERALL BUILDING HEIGHT.
     7. FACADES WILL BE DEVELOPED TO VISUALLY SCREEN ROOFTOP EQUIPMENT.
   - G. THE ARCHITECTURAL DEVELOPMENT OF BUILDINGS WILL UTILIZE A BUILDING MASS REDUCTION ABOVE THE SECOND FLOOR OF FIVE FEET. MINOR ADJUSTMENTS AND REDUCTIONS IN THE NOTED FIVE FEET MAY OCCUR BASED ON THE DEVELOPMENT OF THE OVERALL DESIGN AESTHETIC. THIS MAY BE ACCOMPLISHED BY UTILIZING BUT NOT LIMITED TO THE FOLLOWING ARCHITECTURAL ELEMENTS:
     1. MATERIAL SHIFTS, PORCHES, BALCONIES, ROOFS EYEBROWS, ADDITIONAL ARCHITECTURAL FEATURES (SEE ITEM 4 ABOVE.)
   - H. PROPOSED BUILDINGS WILL UTILIZE FEATURES, BUT NOT LIMITED TO THE FOLLOWING:
     1. ROOF EXTENSIONS, SLOPED ROOFS, EYEBROWS, PARAPETS, SHADES, SCREENS
   - I. SOLAR PANELS LOCATED ON THE MAIN ROOFS ARE ABLE TO BE VISIBLE DUE TO THE NEED TO MAXIMIZE THE SOLAR GAIN REQUIRED AND NOT NEED TO BE SCREENED.
   - J. MECHANICAL EQUIPMENT WILL CONTAIN SCREENING TECHNIQUES TO REMAIN "INVISIBLE" FROM THE PREDOMINATE GRADE. ROOF SCREEN MATERIAL WILL BE COMPATIBLE WITH THE OVERALL ARCHITECTURAL DESIGN AESTHETIC.
   - K. SIGNAGE ASSOCIATED WITHE THE PRINCIPAL STRUCTURE IN PLANNING AREA #2, KNOWN AS THE ROCK REST LODGE, MAY REMAIN AS EXISTING AT TIME OF RECORDING.
   - L. ARCHITECTURAL EXEMPTIONS
     1. THE EXISTING PRINCIPAL STRUCTURE, LOCATED IN PLANNING AREA #2 AND KNOWN AS THE ROCK REST LODGE, IS EXEMPT FROM THE ARCHITECTURE WRITTEN RESTRICTIONS OF THIS PLANNED DEVELOPMENT AND SECTION 13 OF THE ZONING RESOLUTION IN DEFERENCE TO ITS ARCHITECTURALLY UNIQUE DESIGN. THE UNIQUE CHARACTER OF THE EXISTING BUILDING SHOULD BE MAINTAINED TO THE EXTENT PRACTICABLE.
     2. THE STONE GATEWAY ARCH IN PLANNING AREA #1 IS EXEMPT FROM THE ARCHITECTURE WRITTEN RESTRICTIONS OF THIS PLANNED DEVELOPMENT AND SECTION 13 OF THE ZONING RESOLUTION IN DEFERENCE TO ITS ARCHITECTURALLY UNIQUE DESIGN.

S. GOLDEN ROAD / MT VERNON MIXED-USE

REZONING APPLICATION

JEFFERSON COUNTY, CO

PREPARED BY:

ripleydesign
LANDSCAPE ARCHITECTURE, LAND PLANNING
419 Canyon Ave. Suite 200 Fort Collins, CO 80521
phone 970.224.5828 | fax 970.225.6657 | www.ripleydesigninc.com

LANDSCAPE ARCHITECT | LAND PLANNER

RIPLEY DESIGN INC.
Joel Weikert
419 Canyon Ave. Suite 200
Fort Collins, CO 80521
p. 970.224.5828

OWNER | APPLICANT

PETRIFIED TREE, LLC AND TALK TO THE HAND, LLC

Phil Hodgkinson
1776 Platte St.
Denver, CO 80202
p. 970.402.8244

ARCHITECT

VFLA ARCHITECTURE + INTERIORS
Jeff Fleischer
419 Canyon Ave. Suite 200
Fort Collins, CO 80521
p. 970.224.1191

ENGINEER

CENTERPOINT ENGINEERING
Matt Buono
1626 Cole Boulevard, Suite 125
Lakewood, CO 80401
p. 303.895.1671

ORIGINAL SIZE 24X36

ISSUED

No.	DESCRIPTION	DATE
01	REZONE	08.10.2023
02	RESUBMITTAL	11.20.2023
03	RESUBMITTAL	03.27.2024
04	FOR HEARING	06.19.2024

REVISIONS

No.	DESCRIPTION	DATE

OFFICIAL DEVELOPMENT PLAN

SEAL:

ENTITLEMENT DRAWINGS NOT FOR CONSTRUCTION

PROJECT No.:	R22-045.1
DRAWN BY:	JW
REVIEWED BY:	RL

DRAWING NUMBER:

2 OF 2

ADDITIONAL CASE DOCUMENTS

100 Jefferson County Parkway, Suite 3550, Golden, Colorado 80419-3550
☎ 303.271.8700 • Fax 303.271.8744 • http://planning.jeffco.us

JEFFERSON COUNTY COLORADO
Planning & Zoning Division

DEVELOPMENT PERMIT APPLICATION

APPLICATION FOR (Please check all that apply)

☑ Rezoning *from* ~~C-1, R-2, and P-D~~ P-D and P-D *to* Planned Development (P-D)

☐ Special Use *Item No.* _____ *of the* _____ *Zone District*

to permit _____

☐ Subdivision Platting ☐ Superlot Process ☑ Rezoning/Special Use ☐ Minor Modification or Revision ☐ Rural Cluster
☐ Exemption from Platting ☐ Superlot ☐ Minor Division of Land ☐ Legalization of Property Division ☐ Vested Rights
☐ Site Approval ☐ Site Development Plan Approval

PURPOSE OF APPLICATION(s)

The purpose of his rezoning application is to bring three separate parcels under separate zoning districts under one cohesive zoning district that allows for:
+ Higher density residential adjacent to existing employment, commercial, and transit areas.
+ Allow for additional commercial uses.
+ Conformance to the Central Plains Area Plan and it's recommendation for the South Golden Road Corridor to act as an Activity Center that includes Mixed-Use development.

DOCUMENTS SUBMITTED

- ☐ Water Supply Report
- ☐ Wastewater Report
- ☐ Utility Report
- ☐ Fire Protection Report
- ☐ Drainage Report
- ☐ Geologic Report
- ☐ Soils Report
- ☐ Radiation Report
- ☐ Sensory Impact Report
- ☐ Wildlife, Vegetation and Landscaping Report
- ☐ Historical, Archaeological & Paleontological Report
- ☐ Reduction of the Plat
- ☐ Exemption Survey
- ☐ Landscape Plan
- ☐ Proof of ownership
- ☐ Proof of access
- ☐ Lighting Plan
- ☐ Architectural Elevations
- ☐ Parking Plan
- ☐ OTHER _____

INSTRUCTIONS FOR SUBMITTAL

- All applications must be submitted electronically to Jefferson County Planning and Zoning.
- Original completed applications must be provided. Copies are not acceptable.
- Incomplete applications will not be accepted and will delay processing.
- Pre-Applications are encouraged prior to the formal submittal of a Development Permit Application.

SPECIAL DISTRICTS

Water Consolidated Mutual Water	*Post Office* USPS Golden - Post Office	*Electricity* Xcel
Sewage Pleasant View Water & Sanitation D	*Park & Rec.* N/A	*Fire* Pleasant View Metropolitan District

STAFF USE ONLY

Case No.		Current Zoning	
Dated Filed		Proposed Zoning/SU	
Planner		Street Address	
Acres		Previous Cases	
Map Sheet		Community Plan	

Project Team Information

Property Owner(s)	E-mail (required)	Phone	Fax
Petrified Tree, LLC	phodgkinson@grandamericaninc.co	970.402.8244	

Address: 16005 Mt Vernon Road, Golden Colorado 80401

Property Owner(s)	E-mail (required)	Phone	Fax
Talk To The Hand, LLC	nofrillgrl@aol.com	303-807-0565	

Address: 16005 Mt Vernon Road, Golden Colorado 80401

Developer/ Subdivider	E-mail (required)	Phone	Fax
Grand American Inc	phodgkinson@grandamericaninc.co	303-297-8090	

Address: 1776 Platte St. Denver, CO 80202

Authorized Representative	E-mail (required)	Phone	Fax
Joel Weikert, Ripley Design Inc	joel.weikert@ripleydesigninc.com	970.498.2994	

Address: 419 Canyon Avenue Suite 200, Fort Collins, CO 80521

Engineer	E-mail (required)	Phone	Fax

Address:

Property Description

Property ID(s)	Acreage	Map Sheet
40-012-00-061, 40-012-17-172, &	+/- 5.87 acres	

Access via: South Golden Road and Mt Vernon Road

Address: 16005 Mt Vernon Road, 16129 West 10th Avenue, 16121 West 10th Avenue, and 16100 South Golden Road, Golden CO 80401

Legal Description: *(attach additional sheet if necessary)*

Please refer to the ~~three~~ deeds accompanying this application for the legal descriptions ~~(of the three parcels)~~ part of this rezoning effort. Thank you!

Additional Information

Please list and attach any additional information to support or clarify this application.

Please refer to the Cover Letter provided with this application for a detailed analysis supporting the rezone application. Thank you!

Disclosure of Property Ownership *(please check all that apply)*

☐ If owner is an individual, indicate name exactly as it appears on the deed.

☑ If owner is a corporation, partnership, limited partnership, or other business entity, name principals and/or managers on a separate page. Include the articles of organization, partnership agreement, resolution of managers, etc., as applicable to establish legal signatures.

Please provide the name(s), mailing address(es), street address(es), and phone number(s) for all owners.

Property Owner Affidavit

I/We Petrified Tree, LLC & Talk To The Hand,LLC, being first duly sworn, depose and state under penalties of perjury that I am *(we are)* the owner*(s)* of the property described herein and which is the subject of the application and proposed hearings; that all answers provided to the questions in this application, and all sketches, data, and all other supplementary matter attached hereto and made part of this application, are honest and true to the best of my *(our)* knowledge and belief. I *(we)* understand that this application must be complete and accurate prior to a hearing being scheduled. I *(we)* authorize County staff to visit the site as necessary for proper review of this application. *(If there are any special conditions such as guard dogs, locked gates, restricted hours, etc., please give the name and phone number of the person*(s) *who can provide access to the site)*

Petrified Tree, LLC	Talk To The Hand, LLC
Name *(printed)*	Name *(printed)*
16005 Mt Vernon Road	16005 Mt Vernon Road
Golden Colorado 80401	Golden Colorado 80401
Address	Address
970.402.8244	303 807 0565
Phone	Phone
N/A	N/A
Fax	Fax
phodgkinson@grandamericaninc.com	nofrillgrl@aol.com
E-Mail *(required)*	E-Mail *(required)*
[signature]	[signature] A ETHRINGIN
Signature	Signature
	MANAGING MEMBER

County of Denver)
SS
State of Colorado)

Sworn to and subscribed before me this 1st day of August, 2023.
(fill in month) *(fill in year)*

By Philip C Hodgkinson
(name printed)

Witness my hand and official seal.

[signature]
Notary Public

My Commission expires: 11/06/23

KATRINA ANN SMITH
Notary Public
State of Colorado
Notary ID # 20154043639
My Commission Expires 11-06-2023

AUTHORIZED REPRESENTATIVE

I/We further permit Ripley Design Inc to act as my/our representative in any manner regarding this application, to answer questions and to represent me/us at any meeting and public hearing*(s)* which may be held on this application. ***NOTE: All correspondence will be sent to the authorized representative. It will be the representative's responsibility to keep the owner(s) adequately informed as to the status of the application.***

Joel Weikert, Ripley Design Inc

Representative Name *(printed)*

419 Canyon Avenue, Suite 200

Fort Collins, CO 80521

Representative Address

970-498-2994

Representative Phone

N/A

Representative Fax

Owner Signature

8/1/2023

Date

ripley design
LANDSCAPE ARCHITECTURE, LAND PLANNING

March 18th, 2025

Jefferson County Colorado
Planning and Zoning
100 Jefferson County Parkway, Suite 3550
Golden, Colorado 80419

Cover Letter
Rezoning (ODP) Amendment
South Golden Road & Mt Vernon Road Mixed-Use

Introduction:
The South Golden Road and Mt Vernon Mixed Use ODP was approved by the Jefferson County Board of County Commissioners on July 30th, 2024, and formerly recorded on October 15th, 2024. That rezoning application pertained to three properties, located at 16129 West 10th Avenue, 16005 Mt Vernon Road, and 16100 South Golden Road. In December 2024, the applicant for the South Golden Road & Mt Vernon Mixed Use ODP purchased 16121 West 10th Avenue, a 0.37-acre property that shares a legal boundary with 16129 West 10th Avenue, north of West 10th. By meeting with County Planning staff on November 19th, it was determined that the best way to incorporate the newly acquired parcel into a future mixed-use development would be to amend the recently approved ODP. The submitted rezone amendment adds the 16121 West 10th parcel to Planning Area #1.

The goal of this proposal is to provide complementary development adjacent to surrounding land uses in the form of high density residential, additional commercial space, and to maintain the existing commercial on site (Rock Rest Lodge). It is the understanding of the applicant that the proposed rezoning amendment adheres to the intent of the Central Plains Area Plan of the Jefferson County Comprehensive Master Plan and purpose of the South Golden Road Corridor.

Property ownership
The parcels located at 16005 Mt Vernon Road, 16100 S Golden Road, and 16129 West 10th Avenue, Jefferson County Colorado are owned by Petrified Tree LLC and Talk to the Hand LLC. The ownership documentation of these properties is well documented with the initial rezoning effort.

The parcel located at 16121 West 10th Avenue is owned by Petrified Tree LLC; the deed for this property is included with the submittal materials.

Applicant contact information:
Phil Hodgkinson, President Petrified Tree, LLC
Phone: (970)402-8244
Email: phodgkinson@grandamericaninc.com

Appointed representative's contact information:
Joel Weikert, Ripley Design, Inc.
Phone: (970)498-2994
Email: joel.weikert@ripleydesigninc.com

Previous Meetings:

Pre-Application Meeting: March 2nd, 2023 (23-102360PA)

- This meeting was held remotely via Teams.
- Sara Hutchinson, the assigned case manager to the Pre-App, led the meeting.

Community Meeting: July 19th, 2023

- This meeting was held remotely via Teams.
- Sara Hutchinson, the assigned case manager, was in attendance and helped coordinate the community meeting with the adjacent community members.

ODP Planning Commission Hearing: July 10th, 2024

- Vote: 4:1 (approved)
- Sara Hutchinson, the assigned case manager, was the primary point of contact for the County at this meeting.

ODP Board of County Commissioners Hearing: July 30th, 2024

- Vote: 3:0 (approved)
- Sara Hutchinson, the assigned case manager, was the primary point of contact for the County at this meeting.

Community Meeting: February 5th, 2025

- This meeting was held remotely via Teams.
- Sara Hutchinson, the assigned case manager, was in attendance and helped coordinate the community meeting with the adjacent community members.
- Two members of the public attended the meeting.

Rezoning Information:

The applicant is proposing to add one parcel (16121 West 10th Avenue) to the recently approved South Golden Road & Mt Vernon Mixed-Use ODP. The existing zoning of 16121 W 10th is P-D and is restricted by the *Bettinger Official Development Plan* (1991). This Bettinger plan permits one single family dwelling on the ~0.37-acre lot; no other uses are permitted. The South Golden Road & Mt Vernon Mixed-Use ODP amendment proposes the 16121 W 10th Avenue lot be added to Planning Area #1. Two minor changes to the written restrictions are proposed with the ODP amendment. The first change revises a statement pertaining to parking requirements because of recently adopted state legislation, HB 24-1304. The revised statement reads as follows: *"Parking shall be provided as presented below unless state law or other statutes allow for reduced parking."* The second change to the written restrictions is the addition of the East PD Boundary setback in Planning Area #1; this change was requested by Jefferson County Planning & Zoning. No further changes to the written restrictions are proposed with the ODP amendment.

The South Golden Road & Mt Vernon Mixed-Use ODP includes two separate Planning Areas. Planning Area #1 provides for a vertically mixed-use building, including ground floor commercial fronting South Golden Road. Higher density residential is permitted on floors above first floor commercial and on the ground level when not fronting a public street. Permitted land uses for this planning area include multifamily dwellings, townhomes, general retail, business and professional offices and service establishments. This planning area continues to be comprised of the majority of the Planned Development.

Planning Area #2 is located on the northeastern corner of the development. The intent of Planning Area #2 is preserving the Rock Rest Lodge as it currently looks and operates today. Please refer to the Official Development Plan provided with the application for further details and written restrictions regarding both Planning Area #1 and Planning Area #2.

Rezone Evaluation Criteria

The same evaluation criteria and justification that supported the South Golden Road & Mt Vernon Mixed-Use ODP is applicable to the amendment proposed. Please see the approval criteria below:

1. *The compatibility of the permitted uses with existing and allowable land uses in the surrounding area.*
    - Existing commercial businesses along South Golden Road vary from insurance, vehicular sales, breweries, to retail. The proposed rezone application would

allow for further commercial uses at ground level, continuing the commercial vernacular at the pedestrian level.

- Golden Pines Condominiums is directly west of the Planned Development. The addition of higher density residential is a compatible land use and would provide additional population immediately adjacent to existing commerce, employment and transit opportunities.
- South Golden Road is changing due to infill redevelopment. The *South Golden Road Mixed Use Development* (P-D) was approved in March of 2023 which provides for a variety of residential uses and all Commercial-One (C-1) land uses. That planned development is located less than ½ mile northwest of the properties part of this application. The residential uses and some of the commercial uses part of this rezoning application are compatible with the land uses proposed in the *South Golden Road Mixed Use Development*.
- The location of this site is at an intersection between a major collector and collector roadways (South Golden Road and Mt Vernon Road, respectively). This location makes it more viable as a mixed-use development.

2. *The degree of conformance of the proposed zone change to applicable land use plans.*

- The subject properties are in the Central Plains Area Plan of the Comprehensive Master Plan. The properties are within the South Golden Road Corridor, which specifically recommends *Activity Center* land uses such as Neighborhood Commercial, Research & Development, and Mixed-Use development. The graphic below demonstrates the extent of this land use corridor (red hue along South Golden Road) and location of the Planned Development properties (black outline).

- The Comprehensive Master Plan defines mixed-use as *"a variety of residential, commercial or industrial land uses on one property, or it can be a mix of those uses with a single building"* (Pp.25). The Official Development Plan included with this application proposes to maintain the existing commercial (Rock Rest Lodge) and provide for a vertically mixed-use development in Planning Area #2. Ground floor commercial is proposed to front South Golden Road, which includes general retail, business and professional offices, and service establishments. Residential is proposed above the ground floor commercial and ground floor that does not face public right of way. This combination of proposed land uses falls within the definition of mixed-use in a location that prescribed by the Comprehensive Plan.

3. *The effect upon health, safety, and welfare of the residents and landowners in the surrounding area.*
    - Vehicular access and pedestrian connectivity will be provided at clear locations along South Golden Road and Mt Vernon.
    - All future buildings associated with this rezone will follow applicable Building and Fire Code standards.
    - The Jefferson County Open Space & Trails Map identifies Mt Vernon Road as a potential trail. The Site Development Plan application, that would follow this rezone, would include right-of-way improvements in the area highlighted in yellow below. These right of way improvements could begin to realize the

future trail while also improving pedestrian safety by connecting W 10th Avenue to South Golden Road via a detached walk, off of the Mt Vernon roadway.

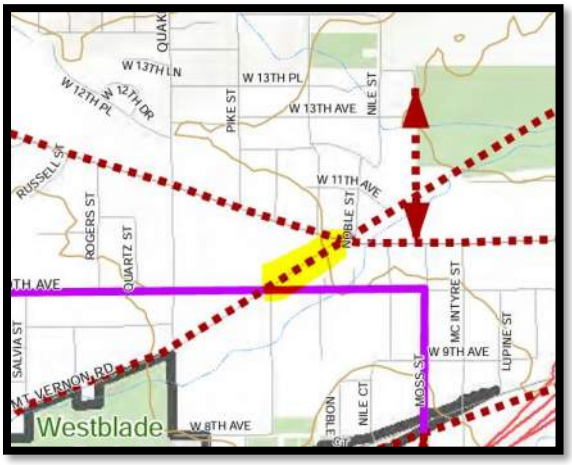

Additional evaluation criteria when rezoning to Planned Development

4. *The impacts of the proposed use upon property in the surrounding area and the ability of mitigating negative impacts.*
    - The proposed rezone and land use will produce minimal impacts to the surrounding area and Jefferson County as a whole.
        - The proposed rezone and subsequent redevelopment is infill in nature. This means existing infrastructure is already constructed around the Planned Development, making it an excellent location for efficient development practices. The Comprehensive Master Plan states: *"Infill and redevelopment opportunities should be seen as valuable as greenfield development to both the community and the County. Infill and redevelopment projects improve the vitality of the community, reduce sprawl, maximize existing infrastructure, and increase the tax benefits to the County" (Pp. 18).*
        - By adding higher density residential, more people will be located immediately adjacent to existing commerce, employment and transit opportunities. This benefits existing businesses by introducing a greater customer and employment base within walking distance.

- Having a population within walking distance will also allow for surrounding businesses to grow without adding additional vehicular trips to fuel that growth.
- Basic improvements to the Mt Vernon right of way (with a subsequent Site Development Plan application) will improve pedestrian access and safety for those in the surrounding area.
- Adequate public facilities are accounted for and provided for police, fire, and utilities.

It is the understanding of the applicant that the rezoning amendment may be presented to both the Planning Commission and the Board of County Commissioners at public hearings. The Planning Commission will review the request and Staff recommendation, receive testimony and evidence on the application, and will recommend approval, conditional approval, or denial of the request to the Board of County Commissioners. The Board of the County Commissioners shall review the recommendations from staff, Planning Commission, and will approve, conditionally, approve, or deny the application.

Our team looks forward to continuing to collaborate with County staff on this project and eventually constructing a mixed-use building that will benefit Jefferson County residents well into the future. Thank you for your review of this cover letter.

JEFFERSON COUNTY COLORADO | Public Health

FORM 6000

Environmental Health Services Division 645 Parfet Street, Lakewood, CO 80215
(303) 232-6301 FAX (303) 271-5760 jeffco.us/public-health

Environmental Questionnaire and Disclosure

USE THIS PACKET TO PROVIDE INFORMATION REGARDING THE PAST AND CURRENT ENVIRONMENTAL CONDITIONS ON YOUR PROPERTY AS PART OF THE LAND DEVELOPMENT PROCESS.

PURPOSE
To identify recognized environmental conditions that pose a threat to human health and/or the environment. To prevent the County from acquiring contaminated land and/or environmental liability.

BACKGROUND
Jefferson County Public Health requires an Environmental Question and Disclosure Statement for all Zoning Resolution and Land Development Regulation cases or any action that has the potential to transfer or dedicate land to the County.

This form is the initial step in that process. In it you will be asked to provide specific and detailed information concerning any past or current activities that may have resulted in negative environmental impacts. It will often require some research by you to determine what these activities may have been. It also requires you to submit citations, surveys, analyses and test results, remediation reports and other documents that may have been generated relating to these activities. To avoid delays, please be sure that your submittal is thorough and accurate.

After evaluating this information and other resources that the Department has available, the Department will make recommendations regarding the need (if any) for further environmental assessments, which may include the preparation of a Phase I Environmental Site Assessment. Subsequent assessments and possibly even remediation may also be required if environmental contamination is found.

INSTRUCTIONS
See page 1 for instructions to completing this form. This form has five (5) pages. Attach additional pages if necessary to completely respond to the questions.

FEE: There is no fee for processing this document.

PROCESSING TIME
Please allow 7-10 business days for review of this form. Incomplete or missing documents will delay this process.

The contact person shown on this application must be able to answer questions concerning information reported on this form or on any attached documents. Please provide a phone number where they can be reached during normal working hours (M-F 8:00am – 5:00pm).

DEPARTMENT CONTACT: Tracy Volkman (303) 271-5763
tvolkman@jeffco.us

REVISED 5/14/2018

ENVIRONMENTAL QUESTIONNAIRE AND DISCLOSURE STATEMENT

NAME OF PROJECT: 16121 W 10TH AVE

CONTACT PERSON: PHIL HODGKINSON PH 303 297-8090

PROPERTY LOCATION: 16121 W 10TH AVE GOLDEN CO

On this property, do any of the following conditions exist, or have any of the following conditions existed at any time in the past?

SECTION	CONDITION	NO	YES
A	Placement of earthen fill from an outside source, operation of a solid waste disposal site or landfill, whether private or commercial, legal or illegal	X	
B	Asbestos or asbestos-containing materials used or stored within any existing buildings or anywhere else onsite	X	
C	Storage or use of electrical equipment such as transformers or capacitors, other than in the provision of normal electrical service	X	
D	Above or underground storage tanks containing gasoline, diesel, fuel oil, waste oil or any other liquid chemical storage	X	
E	Storage or use of pesticides and herbicides or any other agricultural chemicals, other than for typical household or garden use	X	
F	Hazardous or dangerous chemicals stored, released or otherwise emitted anywhere on the property	X	
G	Storage or use of explosives, including dynamite, blasting caps, or unexploded ordinance such as bullets and bombs	X	
H	Radiation hazards such as radiation from uranium mine and mill tailings, nuclear reactors, and/or the processing, handling, disposal and/or deposition of radioactive materials.	X	

If you answered "NO" to ALL of the above, please sign below in the presence of a NOTARY PUBLIC and return this page only to the Department.

If you answered "YES" to ANY of the above, please complete Parts I and II on page 2 AND complete any SECTION on pages 3-5 to which you responded "YES" above. Then sign below in the presence of a NOTARY PUBLIC and return the entire packet (pages 1-5) to the Department.

As the present owner of the Property or as an officer or a general partner of the present owner of the Property (or duly authorized representative of such owner), I am familiar with all of the operations presently conducted on the Property. I have made a diligent inquiry into the former uses of the property; and hereby certify to and for the benefit of Jefferson County that to the best of my knowledge and belief the information disclosed on or attached to this form is true and correct.

NAME: Phil H DATE: 3/18/2025

State of Colorado)
) ss.
County of Denver)

The above and foregoing Environmental Questionnaire and Disclosure Statement was acknowledged before me this 18 day of March, 2025, by Phil Hodgkinson.

WITNESS my hand and official seal.

NOTARY PUBLIC

MY COMMISSION EXPIRES: 11-20-2027

ALEXANDRIA NICOLE WARREN
Notary Public
State of Colorado
Notary ID # 20234043960
My Commission Expires 11-20-2027

PLEASANT VIEW METROPOLITAN DISTRICT FIRE DEPARTMENT
955 Moss St. Golden, CO 80401 Phone: (303) 279-4361 Fax: (303) 278-3430

December 16, 2024

Jefferson County Planning and Zoning Department
100 Jefferson County Parkway, Suite 3550
Golden, Colorado 80419-3550

Joel Weikert
Ripley Design Inc
419 Canyon Avenue, Suite 200
Fort Collins, CO 80521

Office: (970) 498-2994

Email: joel.weikert@ripleydesigninc.com

To Whom It May Concern:

The properties are at 16005 Mt. Vernon Rd, 16100 S. Golden Rd. and 16121, 16129 W. 10th Ave. Golden, CO 80401, Parcel ID 40-012-00-061, 40-012-17-172, 40-012-17-173, and 40-012-17-174 are within the Pleasant View Metropolitan District. Pleasant View Fire Department will provide fire protection services. Fire service will be provided as long as the provision of the International Fire Code, 2018 edition, including all amendments, is met in development.

The Pleasant View Fire Department will follow all guidelines set forth by the Jefferson County Building Department and Planning and Zoning regarding property improvements or building constriction.

The District has a minimum standard requirement for fire flow and fire hydrant locations listed in Appendix B and C. of the 2018 International Fire Code.

This letter does not address the fire code requirements for this property. Any property improvements require a site plan or construction permit from the fire department. The site and construction plans shall be submitted to our office for review and approval before any improvements or construction b***egins.*** Fire suppression plans must be submitted to the Golden Fire Department for review at permits.cityofgolden.net.

Pleasant View Fire Department reserves the right to provide additional comments/requirements when plans are submitted and reviewed per applicable codes and amendments.

If you have any questions regarding this correspondence, don't hesitate to contact me at 303-279-4361 extension 301 or by email.

Sincerely,

Chris P. Malmgren
Fire Chief
CPM/cpm
FPL 12.16.24

Water & Sanitation

December 2, 2024

Joel Weikert
Ripley Design Inc.
joel.weikert@ripleydesigninc.com

Re: Will-Serve for Sewer Service
16121 West 10th Avenue

To Whom It May Concern:

This letter is to certify that sewer service is provided by Pleasant View Water & Sanitation District ("District") for the following property: 16121 West 10th Avenue. Subject to the rules, regulations and requirements of the District and Metro Water Recovery.

The Property is located entirely within the boundaries of the District and is eligible to receive sewer service from facilities of the District subject to: (i) the limitations and conditions set forth in this letter; (ii) the payment of all applicable District and Metro Water Recovery fees and charges; and (iii) strict compliance with all applicable policies, rules, regulations, and engineering standards and specifications of Metro Water Recovery, and the District. No specific facility material, size, or location can be determined until the applicable water and/or sewer plans for the Property have been submitted to and approved by Metro Water Recovery, and the District, as the case may be.

The provision of sewer service to the Property is expressly conditioned upon the availability of capacity in the District's existing facilities. If improvements to District facilities are needed to serve the Property, the owner/developer will be required to pay for those improvements. Other conditions include, but are not limited to, conveyance of all appropriate easements and the installation and acceptance by the District of all public sanitary sewer mains and related appurtenances needed to serve the Property, if applicable.

All sewer mains needed to serve the Property must comply with the District's engineering standards and specifications and those of Metro Water Recovery, if applicable. The District receives sewer service pursuant to agreements with Metro Water Recovery and all sewer service within the District is subject to the terms and conditions of those agreements. Sewer taps for new service are currently available, but availability is subject to change and will be determined at the time of sewer tap application.

Please feel free to contact me directly if you need additional information.

Sincerely,

Dominique Devaney
District Manager

955 Moss Street Golden, CO 80401 (303) 279-3391 PVWSD@pvwsdistrict.org

CONSOLIDATED
mutual water

December 2, 2024

Joel Weikert
Joel.weikert@ripleydesigninc.com

Re: 16121 W. 10th Ave – Will Serve

Dear Mr. Weikert,

This letter will acknowledge your request for a will-serve letter for the above-referenced property.

Please be advised that the property is in an area served by The Consolidated Mutual Water Company (Company). Our records indicate that the property addressed as 16121 W. 10th Avenue receives domestic water from the Company through a 5/8 "Tap & Meter. Domestic water service may continue to be provided to this property subject to compliance with the Company's By-Laws, rules, regulations, and requirements for such service.

Fire protection requirements should be verified with the Pleasant View Metro District, and those requirements forwarded to this office. **If a main extension, fire line, or fire hydrant(s) are required, a separate meeting will need to be held with the owner/developer to discuss water infrastructure.** Please have the owner/developer contact our Engineering Department at 303.238.0451.

If you should have any questions or comments regarding this correspondence, please contact this office at 303.238.0451.

Sincerely,

Missy Thompson
Tap Administrator

cc: Andy Rogers, CMWCo Vice President
Casey Burtis, Manager – Engineering
Chris P. Malmgren – Fire Chief of Pleasant View Metro District

Land Title
GUARANTEE COMPANY
Since 1967

Special Warranty Deed

(Pursuant to C.R.S. 38-30-113(1)(b))

State Documentary Fee
Date: December 06, 2024
$64.00

This Deed, effective as of **December 6th, 2024**, signed on the date(s) acknowledged below, by Grantor(s), **BONNIE MAE MANSANAREZ**, whose street address is **16121 WEST 10TH AVENUE, GOLDEN, CO 80401**, City or Town of **GOLDEN**, County of **Jefferson** and State of **Colorado** , for the consideration of (**$640,000.00**) ***Six Hundred Forty Thousand and 00/100*** dollars, in hand paid, hereby sell(s) and convey(s) to **PETRIFIED TREE, LLC, A COLORADO LIMITED LIABILITY COMPANY** , whose street address is **16005 MT VERNON RD, Golden, CO 80401**, City or Town of **Golden**, County of **Jefferson** and State of **Colorado**, the following real property in the County of **Jefferson** and State of Colorado, to wit:

LOT 1, BURDICK HEIGHTS EXEMPTION SURVEY NO. 1, COUNTY OF JEFFERSON, STATE OF COLORADO.

also known by street and number as: **16121 WEST 10TH AVENUE, GOLDEN, CO 80401**

with all its appurtenances and warrant(s) the title to the same against all persons claiming under me(us), subject to Statutory Exceptions.

Bonnie Mae Mansanarez
BONNIE MAE MANSANAREZ

State of CALIFORNIA)
)ss.
County of MONTEREY)

The foregoing instrument was acknowledged before me on this day of DEC 5th, 2024 by **BONNIE MAE MANSANAREZ**

Witness my hand and official seal

My Commission expires: 12-12-24

Notary Public

J. KEATON
Notary Public - California
Monterey County
Commission # 2337307
My Comm. Expires Dec 12, 2024

When recorded return to: **PETRIFIED TREE, LLC, A COLORADO LIMITED LIABILITY COMPANY**
16005 MT VERNON RD, Golden, CO 80401

WARRANTY DEED

THIS DEED, Made this 15th day of October, 19 96, between Francis L. Leeper and Patricia Leeper

of the County of Jefferson, and State of Colorado, of the first part, and TALK TO THE HAND, LLC

Cont.

a corporation duly organized and existing under and by virtue of the laws of the State of Colorado, of the second part, whose legal address is 16005 Mount Vernon Road, Golden, CO 80401

STATE DOCUMENTARY FEE 425.00 OCT 16 1996

WITNESSETH, That the said party of the first part, for and in consideration of the sum of FOUR HUNDRED TWENTY FIVE THOUSAND AND NO/100---------- DOLLARS, ($425,000.00), to the said party of the first part, in hand paid by the said party of the second part, the receipt whereof is hereby confessed and acknowledged, has granted, bargained, sold and conveyed, and by these presents does grant, bargain, sell, convey and confirm, unto the said party of the second part, its successors and assigns forever, all the following described lot(s) or parcel(s) of land, situate, lying and being in the County of Jefferson, and State of Colorado, to wit:

Beginning at a point 793 feet East of the Southwest corner of the NW1/4 Section 1, Township 4 South, Range 70 West; thence 3/4ths of a foot East; thence Northeasterly 706 feet to East line of SW1/4 NW1/4; thence Northwesterly along South Golden Road 284 feet; thence Southwesterly 609 feet to point of beginning.
ALSO: Commencing 793 feet East of Southwest corner of NW1/4, Section 1, Township 4 South, Range 70 West, thence Northeasterly 706 feet to the East line of SW1/4 NW1/4; thence Easterly along South side of South Golden Road, 171 feet to intersection of Mount Vernon Road and South Golden Road, thence Southwesterly along the Northwesterly side of Mount Vernon road to the South line of the NW1/4 of Section 1; thence West 38 feet to place of beginning.
County of Jefferson, State of Colorado
also known by street and number as 16005 Mount Vernon Road, Golden, CO 80401

1.1 Doc Fee #42.50

TOGETHER with all and singular the hereditaments and appurtenances thereunto belonging, or in anywise appertaining, and the reversion and reversions, remainder and remainders, rents, issues and profits thereof, and all the estate, right, title, interest, claim and demand whatsoever of the said party of the first part, either in law or equity, of, in and to the above bargained premises, with the hereditaments and appurtenances.

TO HAVE AND TO HOLD the said premises above bargained and described, with the appurtenances, unto the said party of the second part, its successors and assigns forever. And the said party of the first part, for himself, his heirs, executors, and administrators, does covenant, grant, bargain and agree to and with the said party of the second part, its successors and assigns, that at the time of the ensealing and delivery of these presents, he is well seized of the premises above conveyed, as of a good, sure, perfect, absolute and indefeasible estate of inheritance, in law, in fee simple, and has good right, full power and lawful authority to grant, bargain, sell and convey the same in manner and form aforesaid, and that the same are free and clear from all former and other grants, bargains, sales, liens, taxes, assessments, encumbrances and restrictions of whatever kind or nature soever, **except for taxes for the current year, a lien but not yet due and payable, easements, restrictions, reservations, covenants and rights-of-way of record, if any,** .

and the above-bargained premises in the quiet and peaceable possession of the said party of the second part, its successors and assigns, against all and every person or persons lawfully claiming or to claim the whole or any part thereof, shall and will WARRANT AND FOREVER DEFEND.

The singular number shall include the plural, the plural the singular, and the use of any gender shall be applicable to all genders.

IN WITNESS WHEREOF, the said party of the first part has hereunto set his hand and seal the day and year first above written.

Signed, Sealed and Delivered in the Presence of

Francis L. Leeper — Patricia Leeper

STATE OF COLORADO)
) ss.
COUNTY OF Denver)

The foregoing instrument was acknowledged before me this 15th day of October, 19 96, by FRANCIS L. LEEPER AND PATRICIA LEEPER

NOTARY PUBLIC JACQUELINE MANERING STATE OF COLORADO

My Commission expires: ~~October 15, 1996~~ 4/18/2000

Witness my hand and official seal.

Notary Public

WDCORP

Warranty Deed to Corporation (for Photographic Record)

KC41614B96-3

WARRANTY DEED

State Doc Fee: $60.00
Recording Fee: $10.00

THIS DEED is dated the 2nd day of February, 2017, and is made between

BF & SL Enterprises, LLC
(whether one, or more than one), the "Grantor" of the County of Jefferson and State of Colorado and

Petrified Tree LLC

the "Grantees", whose legal address is 16005 Mt. Vernon Rd, Golden, CO 80401 of the County of Jefferson and State of Colorado

WITNESS, that the Grantor, for and in consideration of the sum of ($600,000.00) Six Hundred Thousand Dollars and No Cents, the receipt and sufficiency of which is hereby acknowledged, hereby grants, bargains, sells, conveys and confirms unto the Grantees and the Grantees' heirs and assigns forever, not in tenancy in common but in joint tenancy, all the real property together with any improvements thereon, located in the County of Jefferson and State of Colorado described as follows:

SEE EXHIBIT "A" ATTACHED HERETO

also known by street and number as: 16100 S Golden Rd., Golden, CO 80401

TOGETHER with all and singular the hereditaments and appurtenances thereto belonging, or in anywise appertaining, the reversions, remainders, rents, issues and profits thereof, and all the estate, right, title, interest, claim and demand whatsoever of the Grantor, either in law or equity, of, in and to the above bargained premises, with the hereditaments and appurtenances;

TO HAVE AND TO HOLD the said premises above bargained and described, with the appurtenances, unto the Grantees, and the Grantees' heirs and assigns forever.
The Grantor, for the Grantor and the Grantor's heirs and assigns, does covenant, grant, bargain, and agree to and with the Grantees, and the Grantees' heirs and assigns: that at the time of the ensealing and delivery of these presents, the Grantor is well seized of the premises above described; has good, sure, perfect, absolute and indefeasible estate of inheritance, in law, and in fee simple; and has good right, full power and lawful authority to grant, bargain, sell and convey the same in manner and form as aforesaid; and that the same are free and clear from all former and other grants, bargains, sales, liens, taxes, assessments, encumbrances and restrictions of whatever kind or nature soever, except and subject to:

And the Grantor shall and will WARRANT AND FOREVER DEFEND the above described premises, in the quiet and peaceable possession of the Grantees, and the heirs and assigns of the Grantees, against all and every person or persons lawfully claiming the whole or any part thereof.

IN WITNESS WHEREOF, the Grantor has executed this deed on the date set forth above.

BF & SL ENTERPRISES, LLC

Barbara K. Fulmer Managing Member

State of Colorado
County of Jefferson

The foregoing instrument was acknowledged before me this 2nd day of February, 2017 by BF & SL Enterprises, LLC.

Witness my hand and official seal.

Notary Public: Beth Quinlan
My commission expires: 9/19/2017

ELIZABETH H. QUINLAN
NOTARY PUBLIC
STATE OF COLORADO
NOTARY ID # 20054036249
MY COMMISSION EXPIRES SEPTEMBER 19, 2017

EXHIBIT "A"
LEGAL DESCRIPTION

Lots 1 and 2, more correctly known as Tracts 1 and 2, Burdick Heights, except the Northerly 20 feet of said Lots 1 and 2, Burdick Heights, and except that portion more particularly described as follows:
A tract of land in the Northwest Quarter of Section 1, Township 4 South, Range 70 West of the 6th P.M., more particularly described as follows: Beginning at a point 778.25 feet East of the Southwest corner of the Northwest Quarter of Section 1, Township 4 South, Range 70 West; thence N 0°10' W a distance of 247.73 feet; thence S 86°59' E a distance of 124.46 feet; thence S 24°23' W a distance of 264.80 feet to the South line of the Northwest Quarter of Section 1; thence West a distance of 14.25 feet, more or less, along the South line of the Northwest Quarter of Section 1 to the Point of Beginning, County of Jefferson, State of Colorado.

When recorded return to:
Steven M. Sommers
3900 East Mexico Ave. Suite 300
Denver, CO 80206
steve@ssommerslawfirm.com

SPECIAL WARRANTY DEED

THIS DEED is dated February , 2022, and is made between Grand American Inc., a California corporation (whether one, or more than one), the "Grantor", of the City of Santa Monica, County of Los Angeles and State of California, and Petrified Tree, LLC, a Colorado limited liability company (whether one, or more than one), the "Grantee," whose legal address is 16005 Mt Vernon Road, Golden, CO 80401 of the County of Jefferson and State of Colorado.

WITNESS, that the Grantor, for and in consideration of the sum of TWO HUNDRED TEN THOUSAND DOLLARS, ($ 210,000.00), the receipt and sufficiency of which is hereby acknowledged, hereby grants, bargains, sells, conveys and confirms unto the Grantee and the Grantee's heirs and assigns forever, all the real property, together with any improvements thereon, located in the County of Jefferson and State of Colorado, described as follows:

See Exhibit A attached hereto and incorporated herein by this reference

also known by street address as: 16129 West 10th Avenue, Golden, CO 80401
and assessor's schedule or parcel number: 300408345

TOGETHER with all and singular the hereditaments and appurtenances thereunto belonging, or in anywise appertaining, the reversions, remainders, rents, issues and profits thereof, and all the estate, right, title, interest, claim and demand whatsoever of the Grantor, either in law or equity, of, in and to the above bargained premises, with the hereditaments and appurtenances;

TO HAVE AND TO HOLD the said premises above bargained and described, with the appurtenances, unto the Grantee and the Grantee's heirs and assigns forever. The Grantor, for the Grantor and the Grantor's heirs and assigns, does covenant and agree that the Grantor shall and will WARRANT THE TITLE AND DEFEND the above described premises, *but not any adjoining vacated street or alley, or other right-of-way that adjoins the real property*, if any, in the quiet and peaceable possession of the Grantee and the heirs and assigns of the Grantee, against all and every person or persons claiming the whole or any part thereof, by, through or under the Grantor except and subject to: ☐ none; or X the following matters: "Statutory Exceptions" as defined in CRS 38-30-113(5)(a).

IN WITNESS WHEREOF, the Grantor has executed this deed on the date set forth above.

Grand American, Inc., a California corporation

By: _____
Philip Hodgkinson, President

STATE OF COLORADO)
) ss.
County of Denver)

The foregoing instrument was acknowledged before me this 24th day of February 2022, by Philip Hodgkinson, President of Grand American, Inc., a California corporation.

Witness my hand and official seal.
My commission expires:

KATRINA ANN SMITH
Notary Public
State of Colorado
Notary ID # 20154043639
My Commission Expires 11-06-2023

Notary Public

Name and Address of Person Creating Newly Created Legal Description (§ 38-35-106.5, C.R.S.)

EXHIBIT A

SCHEDULE A

LEGAL DESCRIPTION

Lot 2A, Burdick Heights Exemption Survey No. 1 Adjustment 1, a Revision to Lot 2, Burdick Heights Exemption Survey No1, located in the NW 1/4 of Section 1, Township 4 South, Range 70 West, of the 6th P.M., per the Map recorded July 10, 2007, at Reception No. 2007080061, described as follows:

Lot 2, Burdick Heights Exemption Survey No. 1, more particularly described as follows:

A Parcel located in the SW 1/4 of the NW 1/4 of Section 1, Township 4 South, Range 70 West of the 6th Principal Meridian, per Map recorded June 19, 1991 in Plat Book 106 at Page 30 as Reception Number 91053181, described as follows:

Commencing at the W 1/4 Corner of Said Section 1, thence N89°58'14"E, along the South line of the NW 1/4 of said Section 1, a distance of 653.11 feet; thence continuing N89°58'14"E, a distance of 124.65 feet; thence N00°01'21"W, a distance of 25.00 feet to the SE corner of Lot 1, Burdick Heights Exemption Survey No.1; thence N00°01'21"W, along the East line of Lot 1, Burdick Heights Exemption Survey No. 1, a distance of 127.94 feet to the SE corner of Lot 2, Burdick Heights Exemption Survey No. 1 and the True Point of Beginning; thence N00°01'21"W, along the East line of said Lot 2, a distance of 214.71 feet to the NE corner of said Lot 2; thence S89°59'43"W, along the North line of said Lot 2, a distance of 124.77 feet to the NW corner of said Lot 2; thence S00°02'27"E, along the West line of said Lot 2, a distance of 214.80 feet to the SW corner of said lot 2; thence N89°57'16"E, along the South line of said Lot 2, a distance of 124.70 feet to theTrue Point of Beginning.

TOGETHER W1TH a 25 foot easement for Ingress and Egress, being the Westerly 25 feet of Lot 1, Burdick Heights Exemption Survey No 1, per the Map recorded June 19, 1991 in Book 106 at Page 30, as Reception Number 91053181County of Jefferson, State of Colorado.

August 1, 2023

Sara Hutchinson
Jefferson County Planning
100 Jefferson County Pkwy
Suite 3550
Golden, CO 80419

Re: 16100 S. Golden Rd., 16129 West 10th Ave., 16005 Mt. Vernon Rd. (the "Properties")
16121 West 10th Avenue

Dear Ms. Hutchinson

Petrified Tree, LLC, a Colorado limited liability company and Talk to the Hand LLC, a Colorado limited liability company (the "Companies"), the fee owners of the Properties, hereby authorize Philip C Hodgkinson, Bruce Phillips, and/or Charlie Ehringer to act as agents for the Companies to apply for rezoning, platting and other land use matters with Jefferson County, and to attend and participate in all meetings, conferences, phone calls, emails and other communications associated therewith.

Respectfully

Petrified Tree, LLC
a Colorado limited liability company

By: [signature]

Its: PRESIDENT, ROCKY MTN REGION

Talk to the Hand, LLC,
a Colorado limited liability company

By: ALBERT EHRINGER

Its: MANAGING MEMBER

APPOINTMENT OF AGENT

Case No. 24 133066RZ

The undersigned Petrified Tree, LLC, a Colorado limited liability company ("Company") hereby confirms appointment of Grand American Inc. ("GAI") as authorized agent of the Company to negotiate and execute by and on behalf of the Company, plats, subdivision maps, development agreements, public improvement agreements and other instruments and maps customarily required by Jefferson County, Colorado for the rezoning, replatting and development of the real property located at 16100 S Golden Road, 16129 W 10th Avenue, 16121 W 10th Avenue, Golden CO 80401. The execution by GAI, acting through its Rocky Mountain Region President, Philip Hodgkinson or its President, Bruce D Phillips, shall create a binding contract of the Company.

Petrified Tree, LLC, a Colorado limited liability company

By: _____

Its: Albert Thomas Ehringer III, Member

Max Thrust, LLC

Date: 01/03/25

Grand American, Inc.

By: _____

Bruce D Phillips, President

By _____

Philip Hodgkinson, President, Rocky Mountain Region

OPERATING AGREEMENT

PETRIFIED TREE LLC
A Colorado Limited Liability Company

THIS AGREEMENT is made and entered into effective this 12th day of December, 2016, by and between **PETRIFIED TREE LLC**, a Colorado limited liability company (the "Company"), **AURIC OVUM LLC**, a California limited liability company and **MAX THRUST LLC** a Colorado limited liability company and each of the other persons who may become a Member of the Company in accordance with the provisions of this Agreement.. The parties hereto agree, in consideration of the promises, covenants, performance and mutual contained herein as follows:

ARTICLE I

FORMATION AND PURPOSE OF COMPANY

1.1. **Articles of Organization.** This Company is organized pursuant to the provisions of the Limited Liability Company Laws of the State of Colorado (the "Act"). The Company filed its Articles of Organization on December 12, 2016. The rights and obligations of the Company and the Members shall be provided in the Articles of Organization and this Operating Agreement.

1.2. **Conflict Between Articles of Organization and Operating Agreement.** If there is any conflict between the provisions of the Articles of Organization and this Operating Agreement, the terms of this Operating Agreement shall control.

1.3. **Purpose.** The Company is formed to purchase the real property located at 16100 S. Golden Road, Golden, Colorado 80401, investigate the feasibility of developing the real property and developing the real property as the Members subsequently agree. The Company may engage in any and all activities related or incidental to the foregoing purposes and for any other lawful purposes permitted by the Act.

1.4. **Name.** The name of the Company is "**PETRIFIED TREE LLC.**" The business of the Company may be conducted under that name, or upon compliance with applicable laws, any other name that the Company deems appropriate or advisable. A Member or Manager shall file any fictitious name certificates and similar filings, and any amendments thereto, that it is directed to file in accordance with this Agreement.

1.5. **Term.** The term of this Agreement shall be perpetual unless sooner terminated as provided by law and this Agreement.

1.6. **Office and Agent.** The Company shall continually maintain an office and registered agent in the State of Colorado as required by the Act. The principal office, registered office and registered agent of the Company shall be as set forth in the Articles of Organization and as the Members subsequently determine.

ARTICLE II

CAPITAL CONTRIBUTIONS

2.1. **Initial Capital Contributions.** The Members will make initial capital contributions to the Company as set forth below. The purpose of the initial capital contributions is to enable the Company to purchase the real property. The initial capital contributions to be made by the Members and with which the Company shall begin are as follows:

Member Name	Contribution
AURIC OVUM LLC	**$400,000.00**
MAX THRUST LLC	**$200,000.00**
Total initial capital contributions	**$600,000.00**

2.2. **Additional Capital Contributions.** The Members shall determine in accordance with this Agreement the amount and timing of additional capital contributions from the Members. The additional capital contributions shall be made by the Members in proportion to their membership interest in the Company. Provided, however, Max Thrust LLC may make up to fifty percent (50%) of the additional capital contributions to the Company. To the extent the additional capital contributions of Max Thrust LLC to the Company exceed its proportional membership interest in the Company then its membership interest in the Company shall be increased accordingly. No Member shall be required to make an additional capital contribution or loan to the Company without its prior written consent. The form of any additional capital contribution may be as the Members agree to. The Company may also seek funds by borrowing or by any other acceptable form of financing approved by the Members. The Company may pledge its assets and take such other reasonable steps to secure such financing as may be approved by the Members in accordance with the terms of this Agreement.

2.3. **Source of Additional Capital Contributions.** In the event the Members decide that additional capital contributions for the Company are necessary and the Members so decide to make such additional contributions, the Members shall promptly make such additional capital contributions to the Company in the method and manner so determined by the Members. In the event a Member does not make the additional capital contribution, the remaining Member shall be so notified and it may make the additional capital contribution for the other Member. Any such additional capital contribution to the Company made by a Member on account of another Member's failure to do so shall be treated as a loan for up to one year and shall be entitled to repayment plus interest on the principal amount thereof at the prime rate plus 3% prior to any further distributions to

such Member. In the event the non-contributing member does not repay the loan within the one year period, the loan shall be converted to a capital contribution for the contributing member and ownership interest shall be re-calculated accordingly at that time.

2.4. **Loans.** In lieu of additional capital contributions, the Company may, as determined by the Members, borrow money from one or any of the Members or third persons. In the event that a loan agreement is negotiated with a Member, it shall be entitled to receive interest at a rate and upon such terms to be determined by the Members. The loan shall be evidenced by a promissory note of the Company and shall have such other terms and conditions as shall be agreed to by the Members. Such interest and repayment of the amounts so loaned are to be entitled to priority of payment over the division and distribution of capital contributions and profit among Members.

2.5. **No Interest.** No Member shall be entitled to any interest on its capital contributions.

2.6. **Return of Capital Contributions.** Upon the dissolution or termination of the Company, the Members will be entitled to a return of their capital contributions in accordance with the Members' then percentage ownership of the Company prior to the division and distribution of the remaining property of the Company to the Members.

ARTICLE III

MEMBERS' ACCOUNTS; ALLOCATION OF PROFIT AND LOSS; DISTRIBUTIONS

3.1. **Capital Accounts.** A separate capital account shall be maintained for each Member. The capital account of each Member shall initially reflect the amounts specified in Section 2.1. The capital account of each Member shall be increased by the amount of its additional capital contributions to the Company as specified in Sections 2.2 and 2.3. The ownership interest of each Member in the Company shall be adjusted pro rata based upon the amounts of each Member's additional capital contribution to the Company. Each Member's membership interest in the Company shall be determined by the amount a Member's capital contributions bears to the total capital contributions of all of the Members to the Company. The Company shall determine and maintain each capital account in accordance with IRC Regulation 1.704-1(b)(2)(iv). No Member shall withdraw any part of his capital account without the agreement of the Members.

3.2. **Income Accounts.** A separate profit and loss account shall be maintained for each Member. Company profits, losses, gains, deductions and credits shall be charged or credited to the separate account annually unless a Member has no credit balance in its income account, in which event losses shall be charged to its capital account. The profits, losses, gains, deductions and credits of the Company shall be distributed or charged to the Members as provided in Section 3.3. No interest shall be paid on any credit balance in an income account.

3.3. **Allocations and Distributions Among Members.** Subject to Sections 2.2, 2.3, 2.6 and 3.1 where the percentage ownership of each Member in the Company may be adjusted, the profits and gains of the Company shall be divided and the losses, deductions and credits of the Company shall be borne in the following proportions:

Member Name	Profits and Gains	Losses, Deductions and Credits
Auric Ovum LLC	**66.67%**	**66.67%**
Max Thrust LLC	**33.33%**	**33.33%**
Total	**100%**	**100%**

All distributions by the Company shall be made in the same percentages as the allocations among Members as set forth above and as subsequently adjusted for additional capital contributions. The Members shall determine in accordance with this Agreement, when and whether a distribution of should be made to the Members. A Member has no right to demand and receive any distribution from the Company. The Company also has the right to make any distribution to a Member in the form of cash.

3.4. **Adjustments.** The provisions set forth above may be adjusted to the extent necessary to comply with federal income tax provisions including in particular the special allocation provisions of IRC Section 704(c) and the qualified income offset provisions contained in IRC Regulations 1.704. Alternatively, the Members may make other provisions and amendments as they agree.

3.5. **Transferred Interest.** If any interest of a Member is transferred, or increased or decreased by reason of the admission of a new Member or otherwise, during any fiscal year of the Company, each item of income, gain, loss, deduction or credit of the Company for such fiscal year shall be assigned pro rata to each day in a particular period of such fiscal year to which such item is attributable and the amount of each such item so assigned to any such day shall be allocated to the Member based upon its membership interest at the close of such day. Notwithstanding any provision above to the contrary, gain or loss of the Company realized in connection with the sale or other disposition of any of the assets of the Company shall be allocated solely to the parties owning membership interests as of the date such sale or other disposition occurs.

ARTICLE IV

MEMBERS DECISION MAKING AND MEETINGS

4.1. **Admission of New Members.** Additional Members may be admitted as unanimously decided by the Members.

4.2. **Decisions by the Members.** The Members shall unanimously make all decisions required of the Members including the appointment of a Manager to manage the Company, use of proceeds of the $25,000.00 initial budget, the approval of the feasibility study, preliminary architectural plans and site development plans, additional capital contributions and all other financial matters related to the acquisition and development of the real property. The Members agree to allow each Member to participate in the Company and have input on such decisions. The Members agree to promptly vote on any matter presented to the Company for a decision by any of the Members. A Member may vote in person or by proxy at any meeting of Members.

4.3. **Meetings of Members.**

4.3.1. Meetings of Members may be held at such time and place, either within or without the State of Colorado, as may be determined by the Members.

4.3.2. Special meetings of the Members may be called by a Member. Written notice (including by email to the Members) stating the place, day and hour of the meeting, and the purpose(s) of which the meeting is called, shall be delivered not less than two (2) days nor more than fifty (50) days before the date of the meeting, either personally or by mail (including email), to each Member of record entitled to vote at such meeting. A waiver of notice in writing (including by email), signed by the Member before, at, or after the time of the meeting stated in the notice shall be equivalent to the giving of such notice. By attending a meeting, a Member waives objection to the lack of notice or defective notice unless the Member, at the beginning of the meeting, objects to the holding of the meeting or the transacting of business at the meeting. A Member who attends a meeting also waives objection to consideration at such meeting of, a particular matter not within the purpose(s) described in the notice unless the Member objects to considering the matter when it is presented.

4.4. **Quorum and Adjournment.** All Members shall constitute a quorum at the meeting of Members. If a quorum is not represented at any meeting of the Members, such meeting may be adjourned for a period not to exceed sixty (60) days at any one adjournment; provided, however, that if the adjournment is for more than thirty (30) days, a notice of the adjourned meeting shall be given to each Member entitled to vote at the meeting.

4.5. **Limited Liability.** No Member shall be personally liable for any debt, obligation, or liability of the Company, whether that obligation arises in contract, tort or otherwise unless otherwise expressly provided for in this Agreement or in the Act.

4.6. **Attempted Transfer of Membership Interest.** Any transfer of a membership interest in violation of this Agreement shall be null and void.

4.7. **Action By Written Consent.** Any action that may be taken at a meeting of the Members may be taken without a meeting if the consent to such action is in writing and signed by all Members.

4.8. **List of Members.** The Company shall prepare and maintain a list of the Members. The list of the Members shall include their names, addresses, phone numbers, email addresses and any other similar information requested by a Member. Each Member agrees to notify the other Member if any of the information on the list changes.

4.9. **Rights of the Members.** Subject to the express provisions of this Agreement:

4.9.1. The Members shall have the rights as described in the Colorado Limited Liability Company Act, as amended from time to time.

4.9.2. The Members may execute any instruments or documents providing for the business or the property of the Company.

4.9.3. Any contract, agreement, debt contracted or liability incurred by the Company in excess of $5000.00 shall be approved by all of the Members. Any such contract, agreement, instrument or documents must be executed by the Members in their individual capacity in order to be personally binding on a Member.

4.10. **Members Duties and Responsibilities.** The Members shall give reasonable time, attention and attendance to and use reasonable efforts to make the decisions required of them as a result of their ownership in the Company and shall, with reasonable skill and power, exert themselves for the interest, benefit and advantage of the Company; and shall diligently pursue the Company purposes.

4.11. **Indemnification.** Members, employees and agents of the Company shall be entitled to be indemnified by the Company to the extent provided in the Colorado Limited Liability Company Act, as amended from time to time, and shall be entitled to the advance of expenses, including attorney fees, in the defense or prosecution of a claim against them in the capacity of Member, employee or agent.

4.12. **Member's Other Activities.** The Members understand that the Members may have other business or non-business activities. A major portion of their time may be devoted to these activities. Neither the Company nor any of its Members shall have any right in or to any such other business, property, interests and independent ventures or to the income or profits derived there from.

4.13. **Payments to Members.** The compensation, reimbursements and other benefits paid to the Members for their services to the Company, if any, shall be agreed to by all of the Members. The Company will pay independent third parties for the costs and expenses incurred in connection with the Company's business.

ARTICLE V

MANAGEMENT OF THE COMPANY

5.1. **General Powers.** The Members shall make decisions with respect to the Company's real property and business as set forth in Article IV above. The Members have elected in the Articles of Organization to have the Company be a manager managed limited liability company. The Members unanimously elect Albert T. Ehringer III to be the Manager of the Company and to pursue and manage the day-to-day activities of the Company, pay the Company's bills, determine a timeline for the development of the real property and keep Company's Members fully informed of the Company's activities and the status of the development of the real property.

5.2. **Rules Relating to the Managers.** Except as expressly set forth otherwise in this Agreement, the management and the conduct of business of the Company shall be the responsibility of the Manager. The Members may adopt resolutions to govern a Manager's activities and the manner in which he shall perform his duties to the Company.

5.2.1. The Manager shall have the rights as described in the Colorado Limited Liability Company Laws, as amended from time to time, including the right to open one or more bank accounts in the name of the Company write checks upon such accounts and designate the Members or Manager as the signors on the bank accounts.

5.2.2. Except as otherwise provided in this Agreement, the Manager may execute any instruments or documents providing for the acquisition, finance and development of the real property of the Company.

5.2.3. Any debt contracted or liability in excess of $5000.00 incurred by the Company shall be approved by the Members. Any such instrument or documents shall be executed by the Manager after further approval by the Members in accordance with the terms of this Agreement. Any debt or liability must be signed by a Member in his individual capacity in order to be personally binding on the Member.

5.2.4. Subject to the right of the Members to agree as provided in Article IV of this Agreement, all of the day-to-day routine decisions affecting the Company, including the control, employment, compensation and discharge of employees; the employment of contractors and subcontractors; the initial feasibility study and architectural plan for the development of the real property shall be made by the Manager in accordance with the terms of this Agreement.

5.3. **Number, Election, and Term of Managers**.

5.3.1. The number of Managers is presently one. The appointment of Managers and the number of Managers appointed shall be determined by the vote or consent of the Members in accordance with this Agreement.

5.3.2. The initial Manager so appointed shall act as the Manager of the Company until his successor has been elected and qualified or until the Manager has been terminated by the Members.

5.4. **Meetings and Voting**.

5.4.1. At any time there is more than one Manager acting as such for the Company, meetings of the Managers may be held at such time and place as the Managers by resolution shall determine.

5.4.2. Written notice of meetings of the Managers shall be delivered at least twenty-four (24) hours before the meeting personally, by telecopier, email, or by mail actually delivered to the Manager within the twenty-four (24) hour period. A waiver of notice in writing, signed by the Manager before, at, or after the time of the meeting stated in the notice, shall be equivalent to the giving of such notice.

5.4.3. By attending a meeting, a Manager waives objection to the lack of notice or defective notice unless, at the beginning of the meeting, the Manager objects to the holding of the meeting or the transacting of business at the meeting.

5.4.4. A majority of the Managers entitled to vote shall constitute a quorum at the meeting of Managers.

5.4.5. If the Managers elect to meet, all decisions of the Managers shall be made by the unanimous decision of the Managers at a properly called meeting of the Managers at which a quorum is present, or by unanimous written consent of the Managers.

5.5. **Managers Duties and Responsibilities.** The Manager shall give reasonable time, attention and attendance to and use reasonable efforts to make the decisions required of him as a result of his position in the Company and shall, with reasonable skill and power, exert himself for the interest, benefit and advantage of the Company; and shall diligently pursue the Company purposes. The Manager shall also faithfully perform and abide by any other agreements he has with the Company.

5.6. **Indemnification.** Members, managers, employees and agents of the Company shall be entitled to be indemnified by the Company to the extent provided in the Colorado Limited Liability Company Laws of the State of Colorado, as amended from time to time, and shall be entitled to the advance of expenses, including attorney fees, in the defense or prosecution of a claim against them in the capacity of Member, manager, employee or agent.

5.7. **Manager's Other Activities.** The Members understand that the Manager may have other business or non-business activities and other commitments. A portion of his time may be devoted to these activities. Neither the Company nor any of its Members shall have any right in or to any such property, interests and independent ventures or to the income or profits derived therefrom.

5.8. **Payments to Manager and Management Fee.** The compensation, reimbursements and other benefits paid to the Manager for services to the Company shall be unanimously agreed to by the Members of the Company. The Members have agreed to pay Max Thrust LLC a management fee equal to three percent (3%) of the gross income of the Company. The Members may agree to retain an outside company to manage the real property owned by the Company.

ARTICLE VI

BOOKS

6.1. **Location of Records.** The Members are responsible for keeping and maintaining the books and records of the Company. The books of the Company shall be maintained at the principal office of the Company or at such other place as the Members shall designate.

6.2. **Access to Records and Accounting.** Each Member shall at all times have access to the books and records of the Company for inspection and copying. Each Member shall also be entitled:

6.2.1. To obtain, upon reasonable demand, for any purpose, such information reasonably related to the Member's membership interest in the Company.

6.2.2. To have true and full information on the status of the real property, the Company's financial condition and any other information regarding the development of the real property and the business of the Company.

6.2.3. To have a copy of the Company's federal, state and local income tax returns for each year promptly after they are available to the Company.

6.2.4. To have a formal accounting of the Company business and finances whenever circumstances render an accounting just and reasonable.

6.3. **Accounting Rules.** The books shall be maintained in the manner decided by the Members. The Members agree to retain an accountant to advise and assist them on such matters. The fiscal year of the Company shall be the calendar year. Distributions to income accounts shall be made no less frequently than annually. The books shall be closed and balanced at the end of each calendar year and, if an audit is requested by any Member, it shall be made as of the closing date. In the event an audit is requested by any Member, the Company shall pay for the expense of any such audit if the Members so agree. If the Members of the Company do not agree to have the Company pay for the expense of the audit, then, in such case, the Member(s) requesting the audit shall pay for the expenses and costs incurred to complete the audit. The Members shall authorize the preparation of year-end profit and loss statements, balance sheet and tax returns by an accountant selected and approved by the Members in accordance with the terms of this Agreement.

ARTICLE VII

DISSOLUTION

7.1. **Causes of Dissolution.** The Company shall be dissolved upon the occurrence of any of the following events:

7.1.1. At any time by the unanimous agreement of the Members;

7.1.2 Upon the occurrence of events or time specified for dissolution in the Articles of Organization; or

7.1.3 At any other time required by law.

7.2. **Death, Disability, Bankruptcy or Retirement; Continuation of Business.** The death, disability, bankruptcy or retirement of Al Ehringer or Albert T. Ehringer III shall not cause a dissolution of the Company, and notwithstanding any such event, the Member whose owner is not deceased, disabled, or bankrupt may continue the business of the Company and purchase the deceased, disabled, ,or bankrupt owner of the Member's ("Withdrawn Member") membership interests so long as all of the other Members in the Company then consent to do so and the Company may legally continue. In the event of a death, disability, or bankruptcy of Al Ehringer or Albert T. Ehringer, III the remaining Members may decide to purchase such Withdrawn Member's membership interests in the Company or allow such Withdrawn Member to continue to be a Member of the Company. The Company may impose any reasonable conditions and restrictions on such a Member's continuation as a Member in the Company.

7.3. **Withdrawn Member.** Upon the withdrawal of a Member for any of the reasons set forth in Section 7.2, the remaining Member shall make all of the decisions of the Members to be made on behalf of the Company.

7.4. **Purchase of a Withdrawn Member's Membership Interest.** If the remaining Member agrees to continue the Company, then the Company has the option, but not the obligation, to purchase the Withdrawn Member's membership interests in the Company. The purchase price for the Withdrawn Member's membership interests shall be the then fair market value of the Company multiplied by the Withdrawn Member's percentage ownership of the Company. The purchase price may be paid by the Company in cash or over a period of time. If the Company does the not pay the purchase price entirely in cash then the purchase price not paid in cash shall be evidenced by a promissory note. The promissory note shall bear interest at the rate of two percent (2%) per annum and shall provide for payments no less frequently than annually and the maximum duration of the promissory note shall be five (5) years from the date the Member withdraws from the Company.

7.5. **Determination of Fair Market Value**. In the event the fair market value of a Withdrawn Member's membership interests is not agreed to by the Company and the Withdrawn Member, then, in such case, the fair market value of the Member's membership interests shall be determined by appraisal. The Company shall hire an independent appraiser. The determination of the independent appraiser shall be the final determination of the then fair market value of the Withdrawn Member's membership interests. The cost of the appraisal shall be paid equally by the Company and the Withdrawn Member.

7.6. **Distribution if the Company is Not Continued.** In the event of dissolution of the Company the Members shall proceed with reasonable promptness to dissolve and liquidate the Company. This will include the sale of the Company's real property and any other assets of the Company. The dissolution of the Company shall be undertaken as follows:

7.6.1. **Articles of Dissolution.** As soon as possible following the occurrence of any of the events causing the dissolution, the Members shall execute Articles of Dissolution and file the same with the Colorado Secretary of State's office.

7.65.2. **Effect of Filing Articles of Dissolution.** On filing the Articles of Dissolution with the Colorado Secretary of State, the Company shall cease to carry on its operations, except insofar as may be necessary for the winding up of its operations.

7.6.3. **Winding Up.** The winding up of the Company and the distribution of the net proceeds from the sale of the Company's real property and any other assets shall be conducted by the Members. Each of the Members shall be furnished with a statement setting forth the assets and liabilities of the Company on the date of complete liquidation.

7.6.4. **Distribution On Dissolution.** Upon dissolution, the Members shall cause liabilities and other obligations of the Company to be paid in the following order of priority:

(a) First, to creditors, including Members who are creditors, in the order of priority as provided by law and any liquidating expenses (including reasonable compensation and expense of Members or Managers who assist with the liquidation);

(b) Second, to the setting up of such reserves as the Members decide for any contingent or unforeseen liabilities or obligations of the Company arising out of or in connection with Company real property or operations; provided, however, that any such reserves will be held in trust for the purposes of disbursing such reserves in payment of any of such contingencies and, at the expiration of such period as the Members decide, to distribute the balance thereafter remaining in the manner provided below;

(c) The balance, if any, to the Members as provided for in Section 2.6 and Article III of this Agreement.

ARTICLE VIII

SALE OF A MEMBERSHIP INTEREST

8.1. **Provisions for the Sale of Membership Interests.** In the event a Member desires to sell, assign or otherwise transfer its membership interests in the Company, including where the Member has obtained a bona fide written offer for the sale thereof, the Member shall first give written notice of the proposed sale and offer to sell its membership interests to all of the other Members of the Company. All of the Members must agree in writing to enable a Member to sell its membership interest in the Company and the terms of any such sale including the purchaser's agreement to be bound by the provisions of this Agreement shall be set forth in the written agreement. The Members agree that Max Thrust LLC shall have the option, but not the obligation, to purchase all of the membership interests of Auric Ovum LLC for an amount equal to its total capital contributions to the Company. If Max Thrust LLC desires to purchase all of the membership interests of Auric Ovum LLC it shall notify Auric Ovum LLC in writing and pay the purchase price to Auric Ovum LLC within ninety (90) days from the date of such written notice.

ARTICLE IX

MEMBERS' COVENANTS

9.1. **Alienation of Membership Interests.** Each Member represents that it has not and will not pledge, mortgage or otherwise encumber its membership interests in the Company or in its real property, assets or other property; or enter into any agreement of any kind that will result in any person, firm or other organization becoming interested with it in the Company.

ARTICLE X

MISCELLANEOUS PROVISIONS

10.1. **Governing Law.** This Agreement and its terms are to be construed according to the laws of the State of Colorado.

10.2. **Counterparts.** This Agreement may be executed in counterparts and each such counterpart shall be deemed an original of the Agreement for all purposes. Facsimile and electronic signatures shall be acceptable and have the same force and effect as original signatures.

10.3. **Independent Legal Counsel.** The Members acknowledge and agree that **WILLIAM B. HAYES** has prepared the documents to create the Company, prepare its Operating Agreement and complete other matters on behalf of the Company. The Members acknowledge and agree that Mr. Hayes represents Max Thrust LLC and Auric Ovum LLC has been advised to consult with independent legal and tax counsel to the extent it deems necessary to determine and protect its interests hereunder. Furthermore, the parties hereto consent to **WILLIAM B. HAYES** legal representation as such.

10.4. **Arbitration.** Any dispute, claim or controversy arising out of or relating to this Agreement or the breach thereof shall be settled by arbitration in accordance with the rules then obtaining of the American Arbitration Association. The Company shall select a single independent arbitrator if the Members unanimously agree to do so. If the Members do not so agree, each Member is entitled to select an independent arbitrator for the arbitration and the decision of the two (2) arbitrators shall be final. In the event the two (2) arbitrators are not able to reach a unanimous decision then the arbitrators shall appoint a third independent arbitrator and the decision of a majority of the three (3) arbitrators shall be final. Judgment upon the award rendered by the arbitration may be entered in any court having jurisdiction thereof. The costs of arbitration, including reasonable attorney fees, shall be paid by the non-prevailing party. If one (1) Member notifies the other Members in writing of a dispute, claim or controversy and requests that the same be arbitrated, no other legal action may then be commenced thereon, except to obtain judgment on the arbitration award. If the issue of the "non-prevailing party" arises, the arbitrator shall make such decision as well. Jurisdiction and venue for the arbitration shall be Golden, Colorado.

IN WITNESS WHEREOF, we have hereunto set our hands and seals on the day first written above.

MEMBERS:

AURIC OVUM LLC

By: _____

MAX THRUST LLC

By: _____ 12/16/16

EXHIBIT A

Names and Addresses of Members

Auric Ovum LLC
2510 Main Street
Santa Monica, California 90405

Max Thrust LLC
16005 Mt. Vernon Road
Golden, Colorado 80401

OFFICE OF THE SECRETARY OF STATE
OF THE STATE OF COLORADO

CERTIFICATE OF DOCUMENT FILED

I, Jena Griswold, as the Secretary of State of the State of Colorado, hereby certify that, according to the records of this office, the attached document is a true and complete copy of the

Filed Document

with Document # 20011008248 of

TALK TO THE HAND, LLC

Colorado Limited Liability Company

(Entity ID # 19961128940)

consisting of 3 pages.

This certificate reflects facts established or disclosed by documents delivered to this office on paper through 04/07/2025 that have been posted, and by documents delivered to this office electronically through 04/08/2025@ 14:37:47.

I have affixed hereto the Great Seal of the State of Colorado and duly generated, executed, and issued this official certificate at Denver, Colorado on 04/08/2025 @ 14:37:47 in accordance with applicable law. This certificate is assigned Confirmation Number 17183876 .

Jena Griswold

Secretary of State of the State of Colorado

**********End of Certificate**********

Notice: A certificate issued electronically from the Colorado Secretary of State's website is fully and immediately valid and effective. However, as an option, the issuance and validity of a certificate obtained electronically may be established by visiting the Validate a Certificate page of the Secretary of State's website, https://www.coloradosos.gov/biz/CertificateSearchCriteria.do entering the certificate's confirmation number displayed on the certificate, and following the instructions displayed. Confirming the issuance of a certificate is merely optional and is not necessary to the valid and effective issuance of a certificate. For more information, visit our website, https://www.coloradosos.gov click "Businesses, trademarks, trade names" and select "Frequently Asked Questions."

DLLC 19961128940

AMENDED AND RESTATED ARTICLES OF ORGANIZATION

OF

TALK TO THE HAND, LLC NCGS

Pursuant to the provisions of the Colorado Limited Liability Company Act, as amended, **TALK TO THE HAND, LLC**, a Colorado limited liability company adopts the following Amended and Restated Articles of Organization in accordance with a resolution adopted by a vote of the Members in accordance with the Operating Agreement. The Amended and Restated Articles of Organization correctly set forth the provisions of the Articles of Organization as amended.

A. **NAME.** The present and original name of the Company is **TALK TO THE HAND, LLC** and these Amended and Restated Articles of Organization do not contain an amendement to this name.

B. **DATE OF ADOPTION.** These Amended and Restated Articles of Organization were adopted by the Members of the Company, effective the 25th day of August, 2000 in the manner prescribed by the Colorado Limited Liability Company Act as amended.

C. **MEMBERSHIP INTERESTS.** All Members of the Company were entitled to vote on the adoption of these Amended and Restated Articles of Organization and voted to adopt these Articles of Organization in accordance with the Company's Operating Agreement.

D. **VOTE.** The number of membership interests voted for the amendment and restatement was sufficient for approval. These Amended and Restated Articles of Organization supercede the original Articles of Organization and all amendments thereto.

E. **EFFECT ON MEMBERSHIP INTERESTS.** These Amended and Restated Articles of Organization do not provide for an exchange, reclassification, or cancellation of the issued membership interests. Specifically, the membership interests are not being increased or decreased nor are the membership interests being impacted or changed by these Amended and Restated Articles of Organization.

F. **EFFECT ON STATED CAPITAL.** These Amended and Restated Articles of Organization do not effect a change in the amount of stated capital in any manner.

FILED
DONETTA DAVIDSON
COLORADO SECRETARY OF STA

G. **AMENDMENT AND RESTATEMENT.** These Amended and Restated Articles of Organization approved by the Members of the Company contains amendments to the original Articles of Organization and supercede the original Articles of Organization and all amendments

20011008248

ARTICLE I

The name of the limited liability company is **TALK TO THE HAND, LLC** (the "Company"), its principal place of business is located at 16005 Mt. Vernon Road, Golden, Colorado 80401.

ARTICLE II

The Company's initial registered agent and the address of the initial registered office in Colorado is as follows:

ALBERT T. EHRINGER, III
1821 Blake Street
Denver, Colorado 80202

ARTICLE III

The Company shall initially have two (2) member(s). The names and addresses of the members are:

ALBERT T. EHRINGER, III
1821 Blake Street
Denver, Colorado 80121

TROY ADAMCZYK
7891 East Hampden Circle
Denver, Colorado 80237

ARTICLE IV

Management of the Company is vested in the members. The members may, however, elect one or more managers to operate the Company subject to the rights of the members to determine the affairs and business of the Company. The Company's members hereby elect **ALBERT T. EHRINGER, III** to be the Company's manager. The number of managers may be increased or decreased or replaced in the manner provided in the Company's Operating Agreement.

ARTICLE V

The Company is organized to purchase real property and make improvements thereon. The improvements specifically include renovating and expanding the premises that are presently used for a restaurant and bar. The Company may also engage in any and all activities related thereto and for any other lawful purposes permitted by the Colorado Limited Liability Company Act.

ARTICLE VI

The Company existance shall be perpetual unless otherwise terminated pursuant to the Operating Agreement.

IN WITNESS WHEREOF, the undersigned members have caused these Amended and Restated Articles Of Organization to be executed this 25 day of August, 2000.

ALBERT T. EHRINGER, III

Troy Adamczyk

TROY ADAMCZYK

Phase I Environmental Site Assessment
Of
Mansanarez Residence
16121 W. 10th Avenue
Golden, Jefferson County, Colorado 80401

916 Consulting Project No. 24-090.KTF

Prepared for: Mr. Phil Hodgkinson
Petrified Tree, LLC
1776 Platte Street
Denver, Colorado 80202

Prepared by: 916 Consulting LLC
55 Longmont Dam Road
Lyons, Colorado 80540
(303) 823-0132

November 18, 2024

PHASE I ENVIRONMENTAL SITE ASSESSMENT

MANSANAREZ RESIDENCE

16121 W. 10th Avenue
Golden, Jefferson County, Colorado 80401

PREPARED FOR:

PETRIFIED TREE, LLC

November 18, 2024
916 Consulting Project No. 24-090.KTF

November 18, 2024

Mr. Phil Hodgkinson
Petrified Tree, LLC
1776 Platte Street
Denver, Colorado 80202

RE: Phase I Environmental Site Assessment of
Mansanarez Residence
16121 W. 10th Avenue
Golden, Jefferson County, Colorado 80401
916 Consulting Project No. 24-090.KTF

Dear Mr. Hodgkinson:

916 Consulting LLC (916 Consulting) has completed a Phase I Environmental Site Assessment (ESA) of the above referenced property. The assessment was conducted in accordance with American Society for Testing and Materials (ASTM) *Standard Practice for Environmental Site Assessments: Phase I Environmental Site Assessment Process* E1527-21, the scope of work provided by the Client, and generally accepted industry standards. 916 Consulting certifies that to the best of its knowledge this report is true and accurate. We hope you find the report complete and informative. Please do not hesitate to contact us if you have any questions or if we can be of further service to you.

Sincerely,

916 Consulting

Ken Feldman, P.G.
Project Manager

Gayle Gordon
Client Relationship Manager

We declare that, to the best of our professional knowledge and belief, we meet the definition of Environmental professional as defined in § 312.10 of 40 C.F.R. § 312 and we have the specific qualifications based on education, training, and experience to assess a property of the nature, history, and setting of the subject property. We have developed and performed the all appropriate inquiries in conformance with the standards and practices set forth in 40 C.F.R. Part 312.

Ken Feldman, P.G.
Principal/Project Manager

Gayle Gordon
Senior Technical Reviewer

TABLE OF CONTENTS

1.0 EXECUTIVE SUMMARY 1
1.1 Property Summary 1
1.2 Summary of Findings and Opinions 1
1.3 Subject Property Description 2
1.4 Significant Data Gaps 2
1.5 Findings and Opinions 2
1.6 Conclusions 3
1.7 Additional Investigation/Recommendations 3

2.0 PURPOSE, SCOPE AND LIMITATIONS 4
2.1 Purpose 4
2.2 Scope of Work 5
2.3 Limitations and Exclusions 9
2.4 Property Access and Non-Access Disclosure 11
2.5 User Reliance 11

3.0 PROPERTY DESCRIPTION 12
3.1 Property Details 12
3.2 Utilities and Service Providers 12
3.3 Adjoining Properties and Surrounding Area 13

4.0 ENVIRONMENTAL SETTING 14
4.1 Topography 14
4.2 Surface Water Bodies 14
4.3 Geology and Hydrology 15
4.4 Environmental Summary 16

5.0 PRIOR USE HISTORY 17
5.1 Interviews/Records 17
5.1.1 User Provided Information 18
5.1.2 State and/or Local Government Information 20
5.2 Previous Reports 22
5.3 Fire Insurance/Historical Maps 22
5.4 Aerial Photographs/Topographic Map 23
5.5 Historic Topographic Maps 27
5.6 Local Street Directories 27
5.7 Chain of Title/Land Title Records 32
5.8 Historical Summary 32

6.0 ENVIRONMENTAL DATABASE REVIEW 34
6.1 Subject Property 35
6.2 NPL, Delisted NPL, SEMS & SEMS Archive Sites 35
6.3 RCRA Facilities 35
6.4 ERNS Incidents and SPILLs Sites 36
6.5 FINDS Sites 37
6.6 State/Tribal Hazardous Waste Sites 37
6.7 State/Tribal Hazardous Waste Facilities and Solid Waste Landfills and Facilities 37
6.8 State/Tribal LUST & UST Sites 37

6.9 Federal Brownfield, IC and EC Sites 39
6.10 State/Tribal IC/EC, VCP and Brownfields Sites 39
6.11 OTHER Regulatory Sites 40
6.12 Environmental Database Summary 40
6.13 Environmental Superliens 41

7.0 SITE RECONNAISSANCE 42
7.1 Visual/Physical Observations 42
7.2 Storage Tanks 45
7.3 Polychlorinated biphenyls (PCBs) 46

8.0 COMMON NON-SCOPE ISSUES 47
8.1 Preliminary Asbestos Evaluation 47
8.2 Radon Review 48
8.3 Lead-Based Paint Evaluation 49
8.4 Drinking Water Evaluation 51
8.5 Microbial Contamination (Mold) 52
8.6 Indoor Air Quality 53
8.7 Emerging Contaminants 54

APPENDICES

Appendix 1 - Property Photographs
Appendix 2 - List of References
Appendix 3 - Municipal and/or Regulatory Agency Correspondence
Appendix 4 - Qualifications
Appendix 5 - Property Questionnaire and Supporting Information
Appendix 6 - Property Maps and Drawings
Appendix 7 - Historical Documentation
Appendix 8 - Environmental Database

1.0 EXECUTIVE SUMMARY

1.1 Property Summary

Property Name:	Mansanarez Residence
Property Address:	16121 W. 10th Avenue
City/County/State/Zip Code:	Golden, Jefferson County, Colorado 80401
Property Usage:	Residential

1.2 Summary of Findings and Opinions

Section		Acceptable	O&M Program	Routine Solution	Additional Study/Action	Estimated Cost
4.0	Environmental Setting	X				
5.0	Prior Use History				X	TBD
7.1	Visual/Physical Observations					
6.0	Environmental Database Review	X				
7.2	Storage Tanks	X				
7.3	PCB Containing Equipment	X				
8.1	Asbestos	X				
8.2	Radon	X				
8.3	Lead-Based Paint	X				
8.4	Drinking Water	X				
8.5	Microbial Contamination	X				
8.6	Indoor Air Quality	X				
8.7	Emerging Contaminants	X				

1.3 Subject Property Description

The subject property consists of one, rectangular parcel of land totaling 0.367 acres, and is improved with one, single-story single family residence totaling 1,464 square feet (SF). The building, which was constructed in 1955, is of wood frame construction with exterior walls clad with vinyl siding. The roofing system is low sloped and covered with modified bitumen sheeting. The building is constructed over a dirt crawlspace and the foundation consists of reinforced concrete stem walls on spread footings and concrete pad footings at column locations. The property grounds are primarily dirt and gravel, with landscaping consisting of trees and patches of grass and limited concrete flatwork. The property is tightly packed with numerous vehicles (cars, trucks, and trailers) that are either parked for storage or are in various states of refurbishment or dismantlement. In addition, auto parts, equipment, tools, building materials, junk and debris are situated throughout the property. There are also four storage sheds that along with some of the trailers are utilized as small workshops.

1.4 Significant Data Gaps

916 Consulting did not identify any significant data gaps, as defined by ASTM, that affected the ability to identify recognized environmental conditions (RECs) in connection with the subject property.

1.5 Findings and Opinions

The subject property has been developed with the current improvements since 1955 and has been utilized primarily for residential purposes, and prior to development was vacant land. For the last ten years, the resident restored and/or repaired vehicles, and at the time of the assessment, there were numerous vehicles that were either parked for storage or were in various states of refurbishment or dismantlement. Additionally, generators, equipment, tools, building materials, junk and debris were situated throughout the property as well as a wide variety of automotive fluids, fuels, paints, and solvents in containers ranging from a pint to 55 gallons in capacity and tires, car batteries and cylinders containing propane and welding gases. The storage of these materials was haphazard and the materials were not stored on secondary containment and several containers were not labeled as to their contents. No obviously stained soil was identified, however, the majority of the property grounds were obscured by the vehicles and other parts and equipment and as automotive salvage activities and unknown storage, handling and disposal practices have occurred for approximately ten years, it is highly likely that surficial soils and possibly underlying soils have been impacted by automotive fluids, solvents and fuel, and this is considered an REC.

916 Consulting did not identify any features, activities, uses, and conditions that indicate the presence or likely presence of hazardous substances or petroleum products that may be indicative of the presence of controlled recognized environmental conditions (CRECs) or historical recognized environmental conditions (HRECs) or de minimis conditions.

In addition to the scope outlined in ASTM Practice E1527-21, and the scope of work provided by the Client, 916 Consulting also performed an expanded evaluation of common business environmental risks (BERs), including select issues identified as "Non-Scope Considerations" in ASTM E1527-21. Business environmental risks of particular concern include those relating to wetlands, regulatory compliance,

asbestos-containing building materials, radon, lead-based paint, lead in drinking water, mold, indoor air quality, and emerging contaminants.

This assessment has revealed no evidence of Business Environmental Risks (BERs) in connection with the subject property.

No indications of on-site septic systems or cesspools were observed or reported. However, information obtained from Jefferson County Public Health indicates that when the property was initially developed in the mid 1950s, the residence utilized a septic system with an approximate 900 gallon concrete tank. No records/information indicating whether the tank and associated piping were removed were identified.

1.6 Conclusions

We have performed a Phase I Environmental Site Assessment in conformance with the scope and limitations of ASTM Practice E1527-21, and the scope of work provided by the Client, of Mansanarez Residence, at 16121 W. 10th Avenue, in Golden, Jefferson County, Colorado 80401. Any exceptions to, or deletions from, this practice are described in Section 2.3 of this report. No controlled recognized environmental conditions (CRECs) and/or significant data gaps in connection with the subject property were identified.

As noted above, the assessment has revealed a recognized environmental condition (REC) with regard to past on-site auto repair/salvage operations including unknown handling, storage and disposal practices of automotive fluids, solvents and fuels.

1.7 Additional Investigation/Recommendations

Based on the scope of work performed for this assessment, 916 Consulting recommends that all of the vehicles and all of the associated automotive fluids, solvents, fuel and auto parts be removed from the property. While some of these materials can be sold or sent for recycling, most of the auto fluids including those unknown materials will most likely need to be sampled prior to removal and must be removed by a certified hazardous waste firm.

Subsequent to the removal of all of the materials, a limited subsurface assessment should be conducted in order to determine if past operations and associated storage, handling and disposal practices have impacted the property.

Additionally, during any demolition/redevelopment activities, the contractor should be aware that the former septic system may still be present.

916 Consulting recognizes that there may be various options for addressing recognized environmental conditions or other concerns. The options provided are not necessarily the only acceptable alternatives for dealing with a particular concern. 916 Consulting provides these options as a guidance for further action.

2.0 PURPOSE, SCOPE AND LIMITATIONS

2.1 Purpose

916 Consulting was retained to conduct a Phase I Environmental Site Assessment of the subject property, in conformance with the scope and limitations of ASTM Practice E1527-21, and the scope of work provided by the Client, to assist in the underwriting of a proposed mortgage loan and/or the purchase of, or transfer of title, of the real property. The goal of the Phase I Environmental Site Assessment is to identify recognized environmental conditions. 916 Consulting has designed and conducted this assessment in order to provide the Client an objective, independent, professional opinion of the potential environmental risks, as defined in ASTM Practice E1527-21, if any, associated with the subject property.

The term "recognized environmental conditions" (REC) means the presence of hazardous substances or petroleum products in, on, or at the subject property due to a release to the environment; (2) the likely presence of hazardous substances or petroleum products in, on, or at the subject property due to a release or likely release to the environment; or (3) the presence of hazardous substances or petroleum products in, on, or at the subject property under conditions that pose a material threat of a future release to the environment.

A "de minimis condition" is a condition related to a release that generally does not present a threat to human health or the environment and that generally would not be the subject of an enforcement action if brought to the attention of appropriate governmental agencies. A condition determined to be a de minimis condition is not a recognized environmental condition nor a controlled recognized environmental condition.

A "controlled recognized environmental condition" (CREC) is a recognized environmental condition affecting the subject property that has been addressed to the satisfaction of the applicable regulatory authority or authorities with hazardous substances or petroleum products allowed to remain in place subject to implementation of required controls (for example, activity and use limitations or other property use limitations).

Activity and use limitations (AULs) are legal or physical restrictions or limitations on the use of, or access to, a site or facility: (1) to reduce or eliminate potential exposure to hazardous substances or petroleum products in the soil, soil vapor, groundwater, and/or surface water on the property, or (2) to prevent activities that could interfere with the effectiveness of a response action, in order to ensure maintenance of a condition of no significant risk to public health or the environment. These legal or physical restrictions, which may include institutional and/or engineering controls, are intended to prevent adverse impacts to individuals or populations that may be exposed to hazardous substances and petroleum products in the soil, soil vapor, groundwater, and/or surface water on a property.

A property use limitation is a limitation or restriction on current or future use of a property in connection with a response to a release, in accordance with the applicable regulatory authority or authorities that allows hazardous substances or petroleum products to remain in place at concentrations exceeding unrestricted use criteria.

A "historical recognized environmental condition" (HREC) is a previous release of hazardous substances or petroleum products affecting the subject property that has been addressed to the satisfaction of the applicable regulatory authority or authorities and meeting unrestricted use criteria established by the applicable regulatory authority or authorities without subjecting the subject property to any controls (for example,

activity and use limitations or other property use limitations). A historical recognized environmental condition is not a recognized environmental condition.

A past release that qualified as a historical recognized environmental condition may no longer qualify as a historical recognized environmental condition if new conditions or information have been identified such as, among other things, a change in regulatory criteria or a subsequently identified migration pathway that was not previously known or evaluated.

2.2 Scope of Work

The assessment was conducted in accordance with American Society for Testing and Materials (ASTM) *Standard Practice for Environmental Site Assessments: Phase I Environmental Site Assessment Process* E1527-21, the scope of work provided by the Client, and generally accepted industry standards.

The purpose of the E1527-21 practice is to define good commercial and customary practice in the United States of America for conducting an environmental site assessment of a parcel of commercial real estate with respect to the range of contaminants within the scope of the Comprehensive Environmental Response, Compensation, and Liability Act (CERCLA) (42 U.S.C. § 9601) and petroleum products. As such, this practice is intended to permit a user to satisfy one of the requirements to qualify for the innocent landowner, contiguous property owner, or bona fide prospective purchaser limitations on CERCLA liability (hereinafter, the "landowner liability protections," or "LLPs"): that is, the practice that constitutes all appropriate inquiries into the previous ownership and uses of the property consistent with good commercial and customary standards and practices as defined at 42 U.S.C. § 9601(35)(B).

The specific scope of work included the following elements:

User's Responsibilities: The user is the party (or parties) seeking to use Practice E1527 to complete an environmental site assessment of the subject property. Generally, the user is the client, as well as any other individuals or entities that may rely on the report.

The "All Appropriate Inquiries" Final Rule (40 C.F.R. Part 312) requires that these tasks be performed by or on behalf of a party (the user) seeking to qualify for an LLP to CERCLA liability (see Note 2). These tasks must also be completed by or on behalf of EPA Brownfield Assessment and Characterization grantees. While such information is not required to be provided to the environmental professional, the environmental professional shall request that the user provide the results of these tasks as such information can assist the environmental professional in identifying recognized environmental conditions. The user should communicate any information to the environmental professional prior to the site reconnaissance.

- Review Land Title Records and Judicial Records for Environmental Liens and Activity and Use Limitations - A search for the existence of environmental liens and AULs that are filed or recorded against the subject property must be conducted.
- Specialized Knowledge or Experience of the User - Users must take into account their specialized knowledge to identify conditions indicative of releases or threatened releases.
- Actual Knowledge of the User- The user should communicate any actual knowledge of any environmental liens or AULs encumbering the subject property or in connection with the subject property.

- Reason for Significantly Lower Purchase Price - In a transaction involving the purchase of a parcel of commercial real estate, the user shall consider the relationship of the purchase price of the subject property to the fair market value of the subject property if the subject property was not affected by hazardous substances or petroleum products. The user should try to identify an explanation for a lower price which does not reasonably reflect fair market value if the subject property was not contaminated, and make a written record of such explanation.
- Commonly Known or Reasonably Ascertainable Information - Commonly known or reasonably ascertainable information within the local community about the subject property must be taken into account by the user.
- Degree of Obviousness - The user must consider the degree of obviousness of the presence or likely presence of releases or threatened releases at the subject property and the ability to detect releases or threatened releases by appropriate investigation.

Physical Setting Resources: One or more physical setting resources were reviewed, as applicable, in order to obtain geologic, hydrogeologic, hydrologic, or topographic characteristics, including a current USGS Topographic Map or historical 7.5-Minute Topographic Map and soil surveys.

Environmental Setting - Efforts were made to determine the environmental setting of the subject property with respect to topography, surface water bodies, flood plain, wetlands, soil type, depth to groundwater and direction of groundwater flow. "Wetlands" is a general term used to describe a variety of ecosystems, which may include prairie potholes, marshes, fens, bogs, wet meadows and swamps. It is not part of this assessment to conduct a formal wetland determination utilizing the defined criteria, but to determine if additional work should be considered based on 916 Consulting's observations.

Government Records: Reasonably ascertainable standard governmental environmental record sources were reviewed. The databases reviewed and the radii chosen are based on the ASTM standard and Client's scope of work. When applicable, pertinent regulatory files and/or records were reviewed.

Historical Records: Attempts were made to identify all obvious uses of the subject property from the present, back to the subject property's first developed use, or back to 1940, whichever is earlier utilizing standard historical sources including any or all of the following: aerial photographs, fire insurance maps, local street directories, topographic maps, building department records, interviews, property tax files, zoning/land use records, and other historical sources. During research of the subject property, attempts were also made to identify obvious uses of the adjoining properties and the surrounding area by reviewing the following standard historical resources if they were researched for the subject property, provide coverage, and are likely to be useful: (1) aerial photographs, (2) fire insurance maps, (3) local street directories, and (4) historical topographic maps.

Site Reconnaissance: The periphery of the subject property as well as the periphery of all structures on the subject property were visually and/or physically observed. The subject property was also viewed from all adjacent public thoroughfares. The interior of structures at the subject property were visually and/or physically observed including accessible common areas, areas where hazardous substances or petroleum products are or may have been stored, used, treated, discharged, or disposed; maintenance and repair areas; boiler rooms; and a representative sample of occupant spaces. Attempts were made to located and identify any features, activities, uses, and conditions related to the any use, treatment, storage, disposal, or generation of hazardous substances or petroleum products. Adjoining properties and the surrounding area were observed during observation of the periphery of the subject property, from public thoroughfares adjacent to or traveled on the way to the subject property, and from buildings and structures otherwise accessed during the site visit.

Storage Tank Search: - Attempts were made to identify any ASTs containing hazardous or regulated materials, and to identify visual indications of USTs, such as fill and vent pipes, or volume gauges. In addition to the visual assessment, state databases of facilities with registered USTs were reviewed, and the property contact and local regulatory officials were interviewed regarding any knowledge of ASTs or USTs.

PCB Containing Equipment Search: - An attempt was made to identify electrical or hydraulic equipment known to or likely to contain PCBs, identify the condition of such equipment and to determine the ownership of the equipment. Fluorescent light ballasts, caulk, paint, or other materials that may contain PCBs, and are located inside and are part of the building or structure, are outside the scope of this practice.

Owner/Operator/Occupant Interviews: Efforts were made to contact and interview, as applicable and available, past and present owners, operators, and occupants of the subject property. In addition, 916 Consulting requested that a person with good knowledge of the uses and physical characteristics of the subject property be identified, such as the key site manager, property manager, physical plant supervisor or head maintenance person.

In addition, 916 Consulting requested, if readily available, that subject property owner, key site manager or user provide any of the following documents and information, as applicable, including environmental site assessment reports, environmental site investigation reports, environmental compliance audit reports, environmental permits, registrations for storage tanks, registrations for underground injection systems, safety data sheets, community right to know plan, safety and spill prevention plans, reports regarding hydrogeologic conditions, reports regarding any self-directed or other cleanup activities, notices or other governmental correspondence for any past or current violations of environmental laws or environmental liens encumbering the property, hazardous waste site generator notices or reports, geotechnical studies, risk assessments, recorded activity and use limitations (AULs), and knowledge of any pending, threatened or past litigation or administrative proceedings relevant to hazardous substances or petroleum products.

Local Government Officials Interviews: Efforts were made to contact and interview state and/or local agency officials including the local fire department, local or regional state health agency, local or regional state agency with jurisdiction over hazardous waste disposal and local agencies responsible for the issuance of building permits or groundwater use permits.

A Business Environmental Risk (BER), is a risk which can have a material environmental or environmentally-driven impact on the business associated with the current or planned use of commercial real estate, not necessarily related to those environmental issues required to be investigated in this practice. Consideration of BER issues may involve addressing one or more non-scope considerations. Evaluation of non-scope items is not required nor relevant for compliance with the AAI Rule or E1527. Additionally, an evaluation of business environmental risk associated with a parcel of commercial real estate may necessitate investigation beyond that identified in this practice.

When included in the scope of work, the following non-scope considerations were evaluated.

Preliminary Asbestos-Containing Building Materials (ACM) Evaluation: - Efforts were made to identify the presence of the most obvious and common ACM. The potential for the presence of friable ACM was evaluated based on the age of the improvements, dates of renovation and other relevant information. Appendix G of the USEPA Guidance Document: *Managing Asbestos in Place - A Building Owner's Guide to Operations and Maintenance Programs for Asbestos-Containing Materials* (the Green Book) was used as a guide in identifying suspect materials. Materials listed in the Green Book, which were installed prior to 1989, are suspected of containing asbestos. It should be noted that asbestos may still be utilized in some non-

friable products, such as sheet vinyl flooring, vinyl floor tiles, floor tile mastic, joint compound, asbestos-cement board and roofing materials, as these materials may still be manufactured and installed in the United States. The level of the preliminary evaluation performed was not designed to comply with the survey requirements of the Asbestos Hazard Emergency Response Act (AHERA), 40 Code of Federal Regulations (CFR) Part 763, National Emission Standard for Hazardous Air Pollutants (NESHAP) 40 CFR 61, Occupational Safety and Health Administration (OSHA) 29 CFR Part 1926.1101, or other local, state or federal regulations, but has been conducted per accepted industry practices to satisfy the scope of work of the rating agencies and/or lenders.

916 Consulting only inspected representative areas of the building(s). No inspection or investigation behind walls, inside plenums or in any other generally inaccessible areas was performed. A finding in this report of "ACM is not a significant concern" or "No significant asbestos was identified" should not be interpreted as "the building is asbestos free." Samples collected, if any, will be analyzed for the presence of asbestos by a National Voluntary Lab Accreditation Program (NVLAP) accredited laboratory using polarized light microscopy and dispersion staining. Any testing results obtained are for the personal use of the Client only and are not to be submitted to any regulatory agency.

Preliminary Radon Review: - The potential for elevated radon to exist within the subject buildings and to pose a significant concern was evaluated based on regional potential for radon, the usage of the subject buildings, and the type of construction and mechanical systems present. This evaluation was not designed or intended to comply with any regulatory agency requirements, but was conducted per accepted industry practices to satisfy the scope of work of the client, rating agencies and/or lender. Sampling, if any, will be conducted utilizing short-term radon detectors. The results of such testing are intended solely as a screen and may not be indicative of long-term average radon levels. Any testing results obtained are for the personal use of the Client only and are not to be submitted to any regulatory agency.

Preliminary Lead-Based Paint Review: - The potential for the presence of LBP at the property and the potential to pose a significant concern was evaluated based on the age of the improvements, dates of renovation and the current and proposed uses of the property. Paint applied prior to 1978 is assumed to be LBP. Lead may also be found in materials other than painted surfaces, such as bathtub and ceramic tile glazing and vinyl mini-blinds. Such items are not included in this preliminary LBP evaluation. This evaluation was not designed or intended to comply with the survey requirements as outlined in the HUD regulations, or other local, state or federal regulations, but was conducted per accepted industry practices to satisfy the scope of work of the client, rating agencies and/or lender. Samples collected, if any, will be analyzed using the Flame Atomic Absorption Spectrophotometry method. Any testing results obtained are for the personal use of the Client only.

Preliminary Drinking Water Evaluation: - The potential for elevated lead and other contaminants in the drinking water supply were evaluated. The evaluation consisted of determining the source of the potable water supply and the results of any sampling or compliance data generated for the water supply.

Preliminary Mold Survey: - A visual/olfactory survey for mold was conducted. The survey was limited to visual observations in the areas walked and should not be considered a comprehensive survey of the property. No sampling was conducted. No inspection or investigation behind walls or in any other generally inaccessible areas was performed. A finding in this report of "No significant evidence of mold was identified" should not be interpreted as "the building is mold free." Any "fungi" or "mold" reference included in this report does not constitute a professional mold inspection and is not based upon any sampling, testing, and/or abatement. 916 Consulting merely notes the presence or absence of "fungi" or "mold" while in the course of issuing this report.

Preliminary Indoor Air Quality Evaluation: - A visual/olfactory survey for potential indoor air pollution was conducted. The survey was limited to observations in the areas walked and should not be considered a comprehensive survey of the property. No sampling was conducted. No assessment or investigation behind walls or in any other generally inaccessible areas was performed. In addition, inquiries were made of the owner and/or manager of the Property regarding indoor air quality.

Preliminary Emerging Contaminants Screen - A screen for substances not currently defined as hazardous substances, known as emerging contaminants, was conducted. These substances may include: (1) some substances that occur naturally or through biological digestion (for example, methane), and (2) substances about which human understanding is evolving (for example, per- and polyfluoroalkyl substances, also known as "PFAS").

Photographs representative of 916 Consulting's observations are included in Appendix 1. In addition to visual observations, 916 Consulting relied on the sources and contacted the individuals listed in Appendix 2. Letters to and responses from municipal and regulatory agencies are included in Appendix 3. If and when applicable, additional forms and checklists required by the Client are also included in the appendices.

2.3 Limitations and Exclusions

The E1527-21 practice is intended for use on a voluntary basis by parties who wish to assess the environmental condition of commercial real estate taking into account commonly known and reasonably ascertainable information. While use of this practice is intended to constitute all appropriate inquiries for purposes of the LLPs, it is not intended that its use be limited to that purpose. This practice is intended primarily as an approach to conducting an inquiry designed to identify recognized environmental conditions in connection with a subject property.

This practice is site-specific in that it relates to the assessment of environmental conditions for specific commercial real estate. Consequently, this practice does not address many additional issues raised in transactions such as purchases of business entities, or interests therein, or of their assets, that may well involve environmental liabilities pertaining to properties previously owned or operated or other off-site environmental liabilities.

No environmental site assessment can wholly eliminate uncertainty regarding the potential for recognized environmental conditions in connection with a subject property. Performance of this practice is intended to reduce, but not eliminate, uncertainty regarding the potential for recognized environmental conditions in connection with a subject property, and this practice recognizes reasonable limits of time and cost.

All appropriate inquiries does not mean an exhaustive assessment of a property. There is a point at which the cost of information obtained or the time required to gather it outweighs the usefulness of the information and, in fact, may be a material detriment to the orderly completion of transactions. In addition, not every property will warrant the same level of assessment. Consistent with good commercial and customary standards and practices as defined at 42 U.S.C. § 9601(35)(B), the appropriate level of environmental site assessment will be guided by the type of property subject to assessment, the expertise and risk tolerance of the user, future intended uses of the subject property disclosed to the environmental professional, and the information developed in the course of the inquiry.

It should not be concluded or assumed that an inquiry was not all appropriate inquiries merely because the inquiry did not identify recognized environmental conditions in connection with a subject property. Environmental site assessments must be evaluated based on the reasonableness of judgments made at the time and under the circumstances in which they were made

The environmental site assessment is based upon conditions at the time of completion of the individual environmental site assessment elements. An environmental site assessment meeting or exceeding this practice is presumed to be viable when it is conducted within 180 days prior to the date of acquisition of the subject property (or, for transactions not involving an acquisition such as a lease or refinance, the date of the intended transaction).

916 Consulting has performed the services and prepared this report in accordance with generally accepted consulting practices, and makes no other warranties, either expressed or implied, as to the character and nature of such services or product. 916 Consulting, its officers, and its employees have no present or contemplated interest in the property. Our employment and compensation for preparing this report are not contingent upon our observations or conclusions.

The Phase I ESA is a non-intrusive investigation and does not generally include sampling or testing of air, soil, water, or building materials. No destructive testing is completed and concealed areas, e.g. inside wall and ceiling cavities, are not assessed. A Phase I ESA does not constitute a Hazardous Materials Survey or Designated Substances Survey, and does not include a review or audit of operational environmental compliance issues, or any environmental management systems, which may exist for the Property.

The assessment does not include a regulatory compliance audit of the facility. There are detailed regulations concerning the proper use, storage and disposal of hazardous and regulated material. These regulations include, but are not limited to, permitting, paper keeping and manifesting requirements, as well as community and employee right-to-know laws. It is typically the responsibility of the tenant(s) to maintain their space(s) in compliance with such regulations.

The conclusions and findings set forth in this report are strictly limited in time and scope to the date of the evaluations. The conclusions presented in the report are based solely on the services described therein, and not on scientific tasks or procedures beyond the scope of agreed-upon services or the time and budgeting restraints imposed by the client. No subsurface exploratory drilling or sampling was done under the scope of this work. Unless specifically stated otherwise in the report, no chemical analyses have been performed during the course of this ESA. Some of the information provided in this report is based upon personal interviews, and research of available documents, records, and maps held by the appropriate government and private agencies. This is subject to the limitations of historical documentation, availability, and accuracy of pertinent records, and the personal recollections of those persons contacted.

Information in this report, concerning equipment operation, condition of spaces and concealed areas not observed or viewable and for the disclosure of known problems, if any, is from sources deemed to be reliable, including, but not limited to property managers and maintenance personnel; however, no representation or warranty is made as to the accuracy thereof.

Based on the scope of work, 916 Consulting cannot warrant subsurface conditions. In addition, any testing results obtained are for the personal use of the Client, their successors and assigns, per the reliance in Section 2.5 only.

2.4 Property Access and Non-Access Disclosure

Site Assessor:	Ken Feldman, P.G.
	A copy of the assessor's qualifications is included in Appendix 4.
Date of Assessment:	November 12, 2024
Weather Conditions:	Clear and sunny with temperatures in the 40s and 50s
Property Contact:	Mr. Phil Hodgkinson
	President, Grand American Inc., Rocky Mountain Region
Site Escort:	Ms. Bonnie Mansanarez
	Property Ownership
Property Questionnaire Sent to:	Mr. Phil Hodgkinson
	President, Grand American Inc., Rocky Mountain Region
Areas Accessed:	916 Consulting accessed all portions of the interior of the residence, the crawlspace, the storage sheds and the interiors of select trailers and other vehicles. In addition, 916 Consulting assessed the exterior of the building and the property grounds.
Inaccessible Areas:	916 Consulting was not denied access to any areas.
Exceptions/Deletions from Scope:	None

2.5 User Reliance

This assessment was conducted on behalf of and for the exclusive use of Petrified Tree, LLC (Client) solely for use in an environmental evaluation of the subject property. This report and findings contained herein shall not, in whole or in part, be disseminated or conveyed to any other party, nor used by any other party, in whole or in part without prior written consent of 916 Consulting.

916 Consulting acknowledges and agrees that the report may be conveyed to and relied upon by the Client, its successors and assigns, rating agencies and bond investors.

Any unauthorized party using or relying upon this Report shall be liable to 916 Consulting for equitable compensation and appropriate punitive damages, and shall be responsible to reimburse 916 Consulting for and indemnify, defend, and hold harmless from and against any and all costs, claims, liabilities, expenses, lost profits, and damages arising as a direct or indirect result of such unauthorized use or reliance.

3.0 PROPERTY DESCRIPTION

3.1 Property Details

Property Size:	0.367 acres (15,987 SF)
	Source: Jefferson County Assessor
Property Usage:	Residential
Number of Buildings:	One
Date of Construction:	1955
	Source: Jefferson County Assessor
Building Size:	1,464 SF
	Source: Jefferson County Assessor
Property Diagram:	A property diagram is provided in Appendix 6.
Legal Description:	916 Consulting was not provided a legal description of the subject property.

3.2 Utilities and Service Providers

Electricity:*	Xcel Energy
Gas:*	Xcel Energy
Potable Water:	Pleasant View Water and Sanitation District
Sanitary Sewer:	Pleasant View Water and Sanitation District
Storm Water:	Jefferson County/Mile High Flood District
Solid Waste:	Not Provided at this time
Landscaping:	Not Provided at this time
Pest Control:	Not Provided at this time

* Not utilized at this time, but service is available

3.3 Adjoining Properties and Surrounding Area

North:	A small office building, two garages and a storage lot
West:	The Golden Pines Condominiums
South:	W. 10th Avenue followed by three single family residences
East:	The Rock Rest Lodge and a single family residence
Surrounding Area:	Mixed residential and commercial development

4.0 ENVIRONMENTAL SETTING

The objective of evaluating the geologic, hydrogeologic, hydrologic, topographic, and other environmental information regarding the subject property and surround area is to evaluate whether a release of hazardous substances or petroleum products at a nearby property might migrate to the subject property and if the release is likely to result in a recognized environmental condition at the subject property.

4.1 Topography

Property Elevation:	The subject property is situated at approximately 5,824 feet above mean sea level (msl).
Topography:	The subject and surrounding properties are generally flat, with engineered grades to direct stormwater flow. Source: United States Geologic Survey (USGS) Topographic Map, Morrison, Colorado Quadrangle, 7.5 minute series
USGS Topographic Map:	A copy of the topographic map is included in Appendix 6.
Property Drainage:	Drainage for the subject property is provided by sheetflow to a grassy swale located along the south adjacent street as well as onto the north and east adjacent properties. Stormwater also infiltrates into the onsite soils.

4.2 Surface Water Bodies

On-Site Water Bodies:	There are no surface water bodies on or bordering the subject property.
Nearest Surface Water Body:	Lena Gulch is located approximately 425 feet southeast of the subject property.
Flood Plain Designation:	Zone X (unshaded), which is defined as an area outside the Special Flood Hazard Area (an area that will be inundated by the flood event having a 1-percent chance of being equaled or exceeded in any given year) and higher than the elevation of the 0.2-percent-annual-chance flood. Source: Federal Emergency Management Agency (FEMA), Flood Insurance Rate Map (FIRM) Panel No. 08059C0281F
Flood Plain Map:	A copy of the flood plain map is included in Appendix 6.
Indications of Wetlands:	Wetlands provide a number of economically and environmentally important functions such as flood control, water quality protection, groundwater recharge, spawning areas for commercially important fish, and wildlife habitat. Wetlands are evaluated using three indicators:

hydrology, hydrophytic vegetation, and hydric soils. Section 404 of the Clean Water Act requires a permit before dredged or fill material may be discharged into regulated wetlands (known as Jurisdictional Wetlands). The Army Corps of Engineers has primary responsibility for making wetlands jurisdictional determinations and issuing wetlands permits. A number of activities are authorized through the use of nationwide permits. 916 Consulting did not observe any water bodies or vegetation indicative of wetlands on the subject property. The subject property is covered with the building, dirt, gravel, concrete and landscaping. It is unlikely that portions of the subject property would be classified as wetlands. Additionally, no wetlands were identified on the U.S. Fish and Wildlife Service's National Wetlands Inventory.

4.3 Geology and Hydrology

Soil Type:	Soils underlying the subject property are classified as Denver-Urban land complex, 2 to 5 percent slopes. The Denver series consists of deep, well to moderately well drained soils that formed in fine textured calcareous materials derived principally from sedimentary rock. Denver soils are found on long alluvial fans and uplands at the front of the Rocky Mountain system. In a typical profile, the surface layer to a depth of 14 inches consists of grayish brown clay loam. The subsoil to a depth of 20 inches consists of grayish brown clay, and the underlying material to a depth of 60 inches consists of light yellowish brown clay. Runoff is medium to slow, and permeability is slow to very slow. Urban land is made up of extensively built-up areas where 75 to 100 percent of each mapped area is either covered by structures or disturbed by cutting, filling or grading. The soils making up Urban land have been so altered and obscured that they cannot be classified. Source: Soil Survey of Golden Area, Colorado, Parts of Denver, Douglas, Jefferson, and Park Counties
Estimated Depth to Groundwater:	The estimated depth to groundwater is ten to 15 feet below ground surface (bgs).
Anticipated Flow Direction:	Northeast
Basis of Flow Direction:	Based on information obtained from area subsurface assessments as well as from information obtained from the USEPA Ground Water Handbook, Vol.1 Ground Water and Contamination, September 1990 which notes that the water table typically conforms to surface topography. This means the direction of flow for shallow groundwater is generally from higher elevations to lower elevations. Localized flow direction may vary as a result of tide, rainfall, development, geologic characteristics, nearby surface water bodies, underground utilities such as storm drains, septic systems and sewers, or other influences such as the presence of high volume wells.

4.4 Environmental Summary

Findings/Opinions: No special hazards, such as sink holes, oil and gas wells, gravel pits, landfills or pipelines were indicated on the subject or adjoining properties. No concerns related to surface water bodies, flood plains or wetlands were identified.

Recommendations: No further study or action is recommended.

5.0 PRIOR USE HISTORY

The objective of compiling and analyzing historical property information and developing a history of the previous uses of the subject property, adjoining properties, and surrounding area is to help identify the likelihood of past uses having led to recognized environmental conditions in connection with the subject property. Copies of prior use support documentation, when available, are included in Appendix 7.

5.1 Interviews/Records

916 Consulting attempted to obtain, contact or interview the sources of information listed below in order to obtain information about current and past features, uses, activities, and conditions indicating recognized environmental conditions in connection with the subject property. The user may include, but is not limited to, the Client, a lender, an owner, the owners representative, the prospective purchaser, a current or prospective tenant, a key site manager, the property manager or contact, the chief physical plant supervisor, building engineer or head maintenance person.

Source:	Property Questionnaire
Pertinent Information:	916 Consulting requested that a property questionnaire be forwarded to an individual who could provide information about the subject property, past and current operations, historical uses and any known environmental concerns including asbestos, radon, lead-based paint, underground and aboveground storage tanks, PCBs and spills or release of regulated or hazardous materials or the existence of environmental liens associated with the subject property. A completed copy of the questionnaire was not returned to 916 Consulting. During the assessment, Ms. Bonnie Mansanarez, property owner did take the time to answer 916 Consulting's questions, as discussed below. A copy of the questionnaire submitted is included in Appendix 5.
Property Contact:	Mr. Phil Hodgkinson President, Grand American Inc., Rocky Mountain Region
Pertinent Information:	Mr. Hodgkinson acted as a liaison for site access, but did not provide any information regarding the prior usage of or any environmental issues associated with the subject property.

Site Escort:	Ms. Bonnie Mansanarez
	Property Ownership
Pertinent Information:	Ms. Bonnie Mansanarez, who has owned the property since 2014, indicated that to the best of her knowledge, the property has always been residential. She stated that her son, who recently passed away, had been living at the property and that he acquired and restored vehicles for resale. She noted that various containers of automotive fluids were present on the property as well as propane cylinders and containers of gasoline used to operate generators, stoves and a refrigerator. Ms. Mansanarez reported that she was not aware of the presence of any contaminated fill dirt, pits, ponds or lagoons, adjoining industrial usages or obvious indicators of the likely presence of contamination on the subject property. However, due to the past onsite activities and usage of hazardous substances (automotive fluids), she could not be certain of how the materials were disposed or if there had been any spills or releases, although she indicated that she had not observed any indication of leaks, spills or dumping. In addition, no environmental liens, lawsuits, environmentally related activity and use limitations, proceedings involving the property or any environmental issues known to have diminished the value of the property or environmental clean ups were reported by Ms. Mansanarez. She indicated that there are no tanks on the property and that the transformer serving the property is owned by the local utility, although the property is not currently connected to the utility grid. To the best of her knowledge, there are no concerns regarding asbestos, radon, lead based paint or mold at the property. In addition, Ms. Mansanarez was not aware of any wells on the property or of any information regarding the septic system once present on the property (refer to Section 7.1).

5.1.1 User Provided Information

To qualify for one of the Landowner Liability Protections (LLPs) offered by the Small Business Liability Relief and Brownfields Revitalization Act of 2001 (the "Brownfields Amendments"), the user must conduct the following inquiries required by 40 C.F.R. §§ 312.25, 312.28, 312.29, 312.30, and 312.31. These inquiries must also be conducted by EPA Brownfield Assessment and Characterization grantees. The user should provide the following information to the environmental professional. Failure to conduct these inquiries could result in a determination that "all appropriate inquiries" is not complete.

All Appropriate Inquiries:

User Representative:	Mr. Phil Hodgkinson	
	President, Grand American Inc., Rocky Mountain Region	(303) 297-8090

Environmental liens that are filed or recorded against the subject property:	Did a search of land title records (or judicial records where appropriate), identify any environmental liens filed or recorded against the subject property under federal, tribal, state or local law or are you aware of any environmental liens encumbering or in connection with the subject property? The user's representative was not aware of any environmental liens filed or recorded against, or encumbering the subject property.
Activity and use limitations that are in place on the subject property or that have been filed or recorded against the subject property	Did a search of land title records (or judicial records where appropriate), identify any AULs, such as engineering controls, land use restrictions or institutional controls that are in place at the subject property and/or have been filed or recorded against the subject property under federal, tribal, state or local law, or are you aware of any AULs encumbering or in connection with the subject property? The user's representative was not aware of any activity and use limitations encumbering the subject property or in connection with the subject property.
Specialized knowledge or experience of the person seeking to qualify for the LLP:	Do you have any specialized knowledge or experience related to the subject property or nearby properties that is material to RECs in connection with the subject property? For example, are you involved in the same line of business as the current or former occupants of the subject property or an adjoining property so that you would have specialized knowledge of the chemicals and processes used by this type of business? The user's representative was not aware of any specialized knowledge or experience that is material to RECs in connection with the subject property.
Relationship of the purchase price to the fair market value of the subject property if it were not contaminated:	Does the purchase price being paid for the subject property reasonably reflect the fair market value of the property? If you conclude that there is a difference, have you considered whether the lower purchase price is because contamination is known or believed to be present at the subject property? The user's representative was not aware of any difference between the purchase price of the subject property and the fair market value of the property if the subject property if it were not contaminated.

Commonly known or reasonably ascertainable information about the subject property:	Are you aware of commonly known or reasonably ascertainable information about the subject property that would help the environmental professional to identify conditions indicative of releases or threatened releases? For example, (a.) Do you know the past uses of the subject property? (b.) Do you know of specific chemicals that are present or once were present at the subject property? (c.) Do you know of spills or other chemical releases that have taken place at the subject property? (d.) Do you know of any environmental cleanups that have taken place at the subject property? The user's representative was not aware of any commonly known or reasonably ascertainable information that is material to RECs in connection with the subject property.
The degree of obviousness of the presence or likely presence of contamination at the subject property, and the ability to detect the contamination by appropriate investigation:	Based on your knowledge and experience related to the subject property, are there any obvious indicators that point to the presence or likely presence of releases at the subject property? The user's representative was not aware of any obvious indicators that point to the presence or likely presence of releases that are material to RECs in connection with the subject property.

5.1.2 State and/or Local Government Information

Building Department Source:	Mr. Michael Harris and on-line information Jefferson County Department of Transportation and Development, Building Safety
Pertinent Information:	916 Consulting requested information pertaining to dates of construction and any previous developments or use of the subject property. The county's records do not date back to the 1950s so no documents related to the original construction of the property are available. No environmental concerns were identified in the accessible permit records.
Fire Department Source:	Mr. Chris Malmgren, Fire Chief Pleasant View Fire Department
Pertinent Information:	916 Consulting requested information pertaining to any records of any aboveground or underground storage tanks, hazardous materials incidents, spills, leaks, or any other circumstance that could be of

environmental concern for the subject property. No records of any above or below ground tanks, hazardous materials incidents or any incidents of environmental concern were identified.

916 Consulting requested information pertaining to any previous developments or use of the subject property. Chief Malmgren is a long time resident of the area and he noted that the subject and surrounding properties have historically been residential and that he was not aware of any environmental issues of concern associated with the area.

Environmental/Health Department Source:	Ms. Madison Pitts, Supervisor and on-line information Jefferson County Public Health, Environmental Health Services
Pertinent Information:	916 Consulting obtained information regarding citizen complaints, illegal drug labs, and/or investigations on the use, handling, release, or discharge of solid or liquid wastes and any other circumstances of health or environmental concern for the subject property. No records of complaints, investigations or any circumstances of environmental concern were identified. The department did identify a record related to the installation of a septic system during the development of the property in 1955. The septic system is discussed in Section 7.1.
Appraiser/Appraisal District/Tax Assessor's Source:	On-line information Jefferson County Assessor
Pertinent Information:	916 Consulting researched information pertaining to the size of the property (land acreage) and structures (square footage) as well as dates of development. According to the on-line information, the property consists of single parcel of land totaling 0.367 acres, and it is noted as improved with a single family residence totaling 1,464 square feet. The date of construction is reported as 1955. 916 Consulting also attempted to obtain information pertaining to any previous developments or use of the subject property. No prior use information was provided by this on-line source.
Environmental Liens/ AULs Source:	On-line Records Jefferson County Clerk and Recorder
Pertinent Information:	ASTM 1527-21 does not require the environmental professional to undertake a review of recorded land title records and judicial records for environmental liens or AULs. ASTM 1527-21 places such responsibilities upon the User. The user or lender may engage a title

company or title professional to undertake a review of reasonably ascertainable recorded land title records and lien records for environmental liens or activity and use limitations currently recorded against or relating to the property. 916 Consulting will not conduct a lien search unless requested.

However, 916 Consulting conducted a preliminary search for information pertaining to any environmental liens or AULs related to the subject property. No records of environmental liens or AULs were identified.

Findings/Opinions: No known concerns were identified based on information from those persons interviewed.

No concerns were uncovered based on the user provided information.

No concerns were uncovered based on information obtained from the Jefferson County Department of Transportation and Development, Building Safety, Pleasant View Fire Department, Jefferson County Public Health, Environmental Services, Jefferson County Assessor or the Jefferson County Clerk and Recorder.

Recommendations: No further study or action is recommended at this time based on the information provided by property ownership or obtained from municipal sources.

5.2 Previous Reports

916 Consulting was not provided any previous reports for the subject property.

5.3 Fire Insurance/Historical Maps

A number of publishers formerly produced maps that showed the location and use of structures on a property at a given point in time. These maps were widely available for areas that were significantly developed during the late 1800s through the 1970s or later. The collection of prior-use maps includes Sanborn Fire Insurance Maps, Manufacturers Mutual Fire Insurance Maps, Nirenstein Real Estate Atlases, as well as maps published by William G. Baist, Hopkins, Rascher, Bracy, Scarlett and Scarlett, Bromley and Hexamer.

916 Consulting had Environmental Data Resources, Inc., (EDR) review their collection of fire insurance maps for any available maps of the subject and adjoining properties. As the subject property was outside and/or on the boundary of the city limits at the time of the map publications, no maps were available.

5.4 Aerial Photographs/Topographic Map

916 Consulting reviewed aerial photographs and topographic maps from the following sources:

Environmental Data Resources (EDR)	www.edrnet.com
Google Earth	https://www.google.com/earth/
Jefferson County GIS	https://gis.jeffco.us/webmaps/jmap/index.html

The following aerial photographs and topographic map were reviewed. When noted, specific usages have been cross referenced with onsite observations and other historical sources.

Date:	1937		Scale: 1"=500'
Source:	EDR		
Subject Property:	The property is vacant land crossed by a dirt road.		
Adjoining Properties:	North:	Vacant land	
	West:	Vacant land	
	South:	A dirt road followed by a single family residence and vacant land	
	East:	A commercial building with a large parking area and vacant land	
Surrounding Area:	Scattered residential and commercial development and vacant and agricultural land		

Date:	1955 (July)		Scale: 1"=500'
Source:	EDR		
Subject Property:	The property is vacant land.		
Adjoining Properties:	North:	Vacant land	
	West:	Vacant land	
	South:	W. 10th Avenue followed by two single family residences and vacant land	
	East:	A commercial building with a large parking area and vacant land	
Surrounding Area:	Mixed residential and commercial development and vacant and agricultural land		

Date:	1963	Scale: 1"=500'
Source:	EDR	
Subject Property:	The property is developed with a single family residence.	

Adjoining Properties:	North:	Vacant land
	West:	Vacant land
	South:	W. 10th Avenue followed by two single family residences and vacant land
	East:	A commercial building with a large parking area and vacant land
Surrounding Area:	Mixed residential and commercial development; additional streets and subdivisions are present, and vacant land	

Date:	1971	Scale: 1"=500'
Source:	EDR	
Subject Property:	The property is developed with a single family residence.	
Adjoining Properties:	North:	Vacant land
	West:	Vacant land
	South:	W. 10th Avenue followed by three single family residences
	East:	A commercial building with a large parking area and a single family residence
Surrounding Area:	Mixed residential and commercial development and vacant land	

Date:	1979	Scale: 1"=500'
Source:	EDR	
Subject Property:	The property is developed with a single family residence.	
Adjoining Properties:	North:	A garage and a vacant lot
	West:	An apartment complex
	South:	W. 10th Avenue followed by three single family residences
	East:	A commercial building with a large parking area and a single family residence
Surrounding Area:	Mixed residential and commercial development; the area is becoming more densely developed, and vacant land	

Date:	1983	Scale: 1"=500'
Source:	EDR	
Subject Property:	The property is developed with a single family residence.	

Adjoining Properties:	North:	A garage and a vacant lot
	West:	An apartment complex
	South:	W. 10th Avenue followed by three single family residences
	East:	A commercial building with a large parking area and a single family residence
Surrounding Area:	Mixed residential and commercial development and limited areas of vacant land	

Date:	1954/1955 original photography, photo revised on 1988/1990 imagery	Scale: 1:24,000
Source:	USGS Topographic Map, Morrison, Colorado Quadrangle	
Subject Property:	The property is located in a gray shaded area indicating an area of general urban development where only landmark structures and area streets are depicted; no structures are depicted on the property.	
Adjoining Properties:	North:	A gray shaded area of general urban development
	West:	A gray shaded area of general urban development
	South:	W. 10th Avenue followed by a gray shaded area of general urban development
	East:	A gray shaded area of general urban development
Surrounding Area:	General urban development, schools, cemeteries and Camp George West (National Guard)	

Date:	1994	Scale: 1"=500'
Source:	EDR	
Subject Property:	The property is developed with a single family residence.	
Adjoining Properties:	North:	A garage and a vacant lot
	West:	An apartment complex
	South:	W. 10th Avenue followed by three single family residences
	East:	A commercial building with a large parking area and a single family residence
Surrounding Area:	Mixed residential and commercial development and limited areas of vacant land	

Date:	1999	Scale: 1"=500'
Source:	EDR	
Subject Property:	The property is developed with a single family residence.	
Adjoining Properties:	North:	A garage, an additional small building and a vacant lot
	West:	An apartment complex
	South:	W. 10th Avenue followed by three single family residences
	East:	A commercial building with a large parking area and a single family residence
Surrounding Area:	Mixed residential and commercial development; additional commercial development is visible, and limited areas of vacant land	

Date:	2005	Scale: 1"=500'
Source:	EDR	
Subject Property:	The property is developed with a single family residence.	
Adjoining Properties:	North:	Two garages, an additional small building and a storage lot
	West:	An apartment complex
	South:	W. 10th Avenue followed by three single family residences
	East:	A commercial building with a large parking area and a single family residence
Surrounding Area:	Mixed residential and commercial development, and limited areas of vacant land	

Date:	2015	Scale: 1"=500'
Source:	EDR	
Subject Property:	The property is developed with a single family residence.	
Adjoining Properties:	North:	Two garages, an additional small building and a storage lot
	West:	An apartment complex
	South:	W. 10th Avenue followed by three single family residences
	East:	A commercial building with a large parking area and a single family residence
Surrounding Area:	Mixed residential and commercial development, and limited areas of vacant land	

Date:	2022	Scale: 1"=165'
Source:	Jefferson County GIS	
Subject Property:	The property is developed with a single family residence. Numerous vehicles are visible on the property.	
Adjoining Properties:	North:	Two garages, a small building and a storage lot
	West:	An apartment complex
	South:	W. 10th Avenue followed by three single family residences
	East:	A commercial building with a large parking area and a single family residence
Surrounding Area:	Mixed residential and commercial development	

5.5 Historic Topographic Maps

916 Consulting reviewed historical topographic maps from the United States Geologic Survey (USGS) dated 1899, 1938, 1942, 1947, 1957 and 1965. No prior development, additional pertinent past usage or environmental information related to the subject and adjoining properties or the surrounding area, not previously identified, suggestive of past uses having led to recognized environmental conditions in connection with the subject property was identified on the reviewed maps.

5.6 Local Street Directories

City directories identify the name of the individual or company located at a given address. 916 Consulting reviewed city directories from the following source:

Denver Public Library (720) 865-1821

The following city directories were identified and reviewed. While earlier city directories are available, listings for the area in which the subject property is located were not identified until the late 1950s.

Date:	1957	Title: Metropolitan Denver Criss Cross Directory	
Source:	Denver Public Library		
Subject Property:	No listings		
Adjoining Properties:	North:	No listings	
	West:	No listings	
	South:	16130 Mt. Vernon Road	Residential listing
		16145 Mt. Vernon Road	Residential listing

	East:	16005 Mt. Vernon Road	Rock Restaurant

Date: 1963/1964 Title: Bresser's Cross Index Directory of Greater Denver

Source: Denver Public Library

Subject Property: 16121 W. 10th Avenue Residential listing

Adjoining Properties:	North:	No listings	
	West:	No listings	
	South:	16160 Mt. Vernon Road	Residential listing
		16145 Mt. Vernon Road	Residential listing
	East:	16005 Mt. Vernon Road	Rock Restaurant Tavern

Date: 1967/1968 Title: Bresser's Cross Index Directory of Greater Denver

Source: Denver Public Library

Subject Property: 16121 W. 10th Avenue Residential listing

Adjoining Properties:	North:	No listings	
	West:	No listings	
	South:	16130 Mt. Vernon Road	Residential listing
		16160 Mt. Vernon Road	Residential listing
		16145 Mt. Vernon Road	Residential listing
	East:	16005 Mt. Vernon Road	RockRust Inc.

Date: 1972 Title: Bresser's Cross Index Directory of Greater Denver

Source: Denver Public Library

Subject Property: 16121 W. 10th Avenue Residential listing

Adjoining Properties:	North:	No listings	
	West:	No listings	
	South:	16160 Mt. Vernon Road	Residential listing
	East:	16005 Mt. Vernon Road	Rock Restaurant Tavern
		16168 W. 10th Avenue	Residential listing

Date:	1977	Title: Cole's Cross Reference Directory Greater Denver	
Source:	Denver Public Library		
Subject Property:	16121 W. 10th Avenue	Residential listing	
Adjoining Properties:	North:	No listings	
	West:	16259 W. 10th Avenue	Quaker Square Apartments, residential listings
		16359 W. 10th Avenue	Residential listings
	South:	16160 Mt. Vernon Road	Residential listing
	East:	16005 Mt. Vernon Road	Rock Restaurant, Fran's Catering
		16168 W. 10th Avenue	Residential listing

Date:	1982	Title: Cole's Cross Reference Directory Greater Denver	
Source:	Denver Public Library		
Subject Property:	No listings		
Adjoining Properties:	North:	No listings	
	West:	16259 W. 10th Avenue	Residential listings
		16359 W. 10th Avenue	Residential listings
	South:	16160 Mt. Vernon Road	Residential listing
	East:	16005 Mt. Vernon Road	Rock Restaurant, Fran's Catering
		16168 W. 10th Avenue	Residential listing

Date:	1987	Title: Cole Directory for Greater Denver	
Source:	Denver Public Library		
Subject Property:	16121 W. 10th Avenue	Residential listing	
Adjoining Properties:	North:	No listings	
	West:	16259 W. 10th Avenue	Residential listings
		16359 W. 10th Avenue	Golden Pines Condos, residential listings
	South:	16130 Mt. Vernon Road	Residential listing
		16160 Mt. Vernon Road	Residential listing
		16145 Mt. Vernon Road	Residential listing
	East:	16168 W. 10th Avenue	Residential listing

Date:	1992	Title:	Cole's Cross Reference Directory Greater Denver
Source:	Denver Public Library		
Subject Property:	16121 W. 10th Avenue	"Not Published"	
Adjoining Properties:	North:	No listings	
	West:	16259 W. 10th Avenue	Condominiums, residential listings
		16359 W. 10th Avenue	Golden Pines Condominiums, residential listings
	South:	16130 Mt. Vernon Road	Residential listing
		16160 Mt. Vernon Road	Residential listing
	East:	16005 Mt. Vernon Road	Rock Restaurant, Fran's Catering
		16168 W. 10th Avenue	Residential listing

Date:	1997	Title:	Cole's Cross Reference Directory Greater Denver
Source:	Denver Public Library		
Subject Property:	16121 W. 10th Avenue	"Not Published"	
Adjoining Properties:	North:	No listings	
	West:	16259 W. 10th Avenue	Residential listings
		16359 W. 10th Avenue	Golden Pines Condominiums, residential listings
	South:	16130 Mt. Vernon Road	Residential listing
		16145 Mt. Vernon Road	Residential listing
	East:	16005 Mt. Vernon Road	Rock Restaurant, Fran's Catering
		16168 W. 10th Avenue	Residential listing

Date:	2002	Title:	Cole's Cross Reference Directory Greater Denver
Source:	Denver Public Library		
Subject Property:	16121 W. 10th Avenue	Residential listing	
Adjoining Properties:	North:	No listings	
	West:	16259 W. 10th Avenue	Residential listings
		16359 W. 10th Avenue	Residential listings
	South:	16130 Mt. Vernon Road	Residential listing
		16160 Mt. Vernon Road	Residential listing
		16145 Mt. Vernon Road	Residential listing

	East:	16005 Mt. Vernon Road	Rock Rest Lodge
		16168 W. 10th Avenue	Residential listing

Date: 2007 Title: Cole Directory, Denver Suburban and Vicinity

Source: Denver Public Library

Subject Property: 16121 W. 10th Avenue Residential listing

Adjoining Properties:	North:	No listings	
	West:	16259 W. 10th Avenue	Residential listings
		16359 W. 10th Avenue	Residential listings
	South:	16130 Mt. Vernon Road	Residential listing
		16160 Mt. Vernon Road	Residential listing
		16145 Mt. Vernon Road	Residential listing
	East:	16005 Mt. Vernon Road	Rock Rest Lodge
		16168 W. 10th Avenue	Residential listing

Date: 2012 Title: Cole Directory, Denver Suburban and Vicinity

Source: Denver Public Library

Subject Property: No listings

Adjoining Properties:	North:	No listings	
	West:	16259 W. 10th Avenue	Apartments, residential listings
		16359 W. 10th Avenue	Residential listings
	South:	16130 Mt. Vernon Road	Residential listing
		16160 Mt. Vernon Road	Residential listing
		16145 Mt. Vernon Road	Residential listing
	East:	16005 Mt. Vernon Road	Rock Rest Lodge
		16168 W. 10th Avenue	Residential listing

Date: 2017 Title: Cole Directory, Denver Suburban and Vicinity

Source: Denver Public Library

Subject Property: 16121 W. 10th Avenue Residential listing

Adjoining Properties:	North:	No listings	
	West:	16259 W. 10th Avenue	Apartments, residential listings
		16359 W. 10th Avenue	Apartments, residential listings

	South:	16160 Mt. Vernon Road	Residential listing
		16145 Mt. Vernon Road	Residential listing
	East:	16005 Mt. Vernon Road	Rock Rest Lodge
		16168 W. 10th Avenue	Residential listing

Date: 2022 Title: Cole Directory, Denver Suburban and Vicinity

Source: Denver Public Library

Subject Property: 16121 W. 10th Avenue Residential listing

Adjoining Properties:	North:	No listings	
	West:	16259 W. 10th Avenue	Apartments, residential listings
		16359 W. 10th Avenue	Apartments, residential listings
	South:	16160 Mt. Vernon Road	Residential listing
		16145 Mt. Vernon Road	Residential listing
	East:	16005 Mt. Vernon Road	Rock Rest Lodge
		16168 W. 10th Avenue	Residential listing

5.7 Chain of Title/Land Title Records

A chain of title was not provided by the Client, nor was one readily available for 916 Consulting's review. Based on the historical data reviewed and the limited information typically provided in a chain of title, it is 916 Consulting's opinion that a chain of title would not have provided any significant additional information. Recorded land title records were not provided by the Client or user for 916 Consulting's review in determining whether any activity and use limitations (AULs) are recorded for the subject property.

5.8 Historical Summary

Findings/Opinions: The subject property has been developed with the current improvements since 1955 and has been utilized primarily for residential purposes. Over the last ten years, the property has also been utilized for auto salvage and restoration. Prior to the current development, the subject property was vacant land. The adjoining properties have been used for single and multifamily housing, a storage lot and a restaurant/bar or have consisted of vacant land.

The surrounding area has consisted of mixed residential and commercial development with area schools, cemeteries and a national guard camp, or have consisted or agricultural and/or vacant land.

Based on the information provided above, it is 916 Consulting's professional opinion that the intent of the scope of work for prior use history has been met. While the subject property has historically been utilized for residential purposes, which would not be

considered an REC, the usage of the subject property for auto salvage and restoration activities over the last ten years would be considered an REC due to the potential for the release of automotive fluids. This is further discussed in Section 7.1.

No prior usage of the adjoining properties or surrounding area was identified that would be considered an REC or indicate the need for additional study.

Recommendations: A limited subsurface assessment should be conducted in order to determine if past operations and associated unknown storage, handling and disposal practices have impacted the property.

6.0 ENVIRONMENTAL DATABASE REVIEW

The purpose of the environmental database review is to obtain and review records that will help identify activities at the subject property, adjoining properties and the surrounding area likely to result in recognized environmental conditions in connection with the subject property. The database information was obtained through Environmental Data Resources (EDR). A detailed description of the databases reviewed and a listing of all sites identified are provided in Appendix 8. The plotting of the sites in the EDR report is done through geo-coding and the locations provided are approximations. 916 Consulting attempted to visually verify the distances to sites located in close proximity to the subject property. In addition, when applicable, 916 Consulting has expanded the search radii for a number of the individual databases, beyond the scope of work and/or ASTM requirements due to the inherent inaccuracies of geo-coding and regulatory listings.

DATABASE	RADIUS (In miles)	NUMBER OF SITES
National Priority List (NPL) and Delisted NPL sites (0.50 mile)	1.0	0
Superfund Enterprise Management System (SEMS)	0.50	0
SEMS Archive	0.50	1
Resource Conservation and Recovery Information System Corrective Actions (RCRA CORRACTS)	1.0	3
Resource Conservation and Recovery Information System Treatment, Storage and Disposal Facilities (RCRA TSD)	0.50	0
Resource Conservation and Recovery Information System Large and Small Quantity Generators (RCRA Gen)/Former RCRA Gen Sites (RCRA Non-Gen)	0.25	2
Federal Institutional Controls (IC)/Engineering Controls (EC) and Federal Brownfields	0.25	0
Emergency Response Notification System (ERNS)	0.25	0
State/Tribal Hazardous Waste Sites (State equivalent of SEMS and NPL)*	N/A	N/A
State Spills-1990	0.25	0
State/Tribal Hazardous Waste Facilities/Solid Waste Facilities and Landfills (SWL)	0.50	0
State/Tribal Leaking Underground Storage Tanks (LUST)	0.50	12
State/Tribal Registered Underground and Aboveground Storage Tanks (UST/AST)	0.25	4
State/Tribal Institutional Controls (IC)/Engineering Controls (EC)/Activity and Use Limitations	0.25	0
State/Tribal Voluntary Cleanup Programs (VCP)	0.50	1
State/Tribal Brownfields	0.50	1
Facility Index System (FINDS)	0.25	7
OTHER	varies	0

* The State of Colorado does not maintain a State Hazardous Waste sites database

Anticipated Groundwater Flow Direction: Northeast

The groundwater flow direction is used to determine whether sites are located up-, cross- or down-gradient of the subject property, which provides an indication of their potential to impact the subject property.

6.1 Subject Property

Databases identified on: None

Comment: N/A

6.2 NPL, Delisted NPL, SEMS & SEMS Archive Sites

The National Priority List (NPL) is the USEPA database of uncontrolled or abandoned hazardous waste sites identified for priority remedial actions under the Superfund program. The Delisted NPL is the database of delisted Superfund sites. The Superfund Enterprise Management System (SEMS) List contains sites which are either proposed to be or on the NPL, and sites which are in the screening and assessment phase for possible inclusion on the NPL. SEMS Archive sites have been removed and archived from the inventory of SEMS sites. Archived status indicates that, to the best of EPA's knowledge, assessment at a site has been completed and that EPA has determined no further steps will be taken to list the site on the National Priorities List (NPL), unless information indicates this decision was not appropriate or other considerations require a recommendation for listing at a later time.

No NPL sites, no Delisted NPL sites, no SEMS sites and one SEMS Archive site were identified within the study radii. The SEMS Archive site which is cross-listed as a State Brownfield site is identified as the Pleasant View PCE and the affected area is located at its closest point approximately 0.29 miles east and cross-gradient of the subject property. Multiple subsurface assessments conducted in relation to petroleum releases and at locations south of the former Camp George West which was located at it closest point approximately 0.32 miles northeast and down-gradient of the subject property identified elevated concentrations of tetrachloroethylene (PCE) and other volatile organic compounds (VOCs) in groundwater. In an attempt to identify the source/sources of the PCE as well as to determine the extent of the contaminant impact, in 1999 the United States Environmental Protection Agency (EPA) and the Colorado Department of Public Health and the Environment (CDPHE) initiated a groundwater sampling program partially funded by a Brownfield grant. The study/sampling area extended further west of the identified impacted area in order to include residential locations utilizing private wells for drinking water. The subject property was not located in the study area, however, several residences to the nearby south and east were included in the sampling plan and no VOCs were detected at any of these nearby locations. The contaminant impact was limited to groundwater in areas on and south/southeast of the former Camp George West, however, the source or sources of the contaminant impact were never determined. No other information was identified, however, as the contaminant impact did not extend to the subject property, this SEMS Archive/Brownfield site is not considered an REC to the subject property.

6.3 RCRA Facilities

Regulated hazardous waste activity is tracked under the Resource Conservation and Recovery Information System as defined by the Resource Conservation Act (RCRA). Facilities that treat, store or dispose of hazardous waste are listed in the RCRA TSD database. Facilities that generate hazardous wastes are listed

in the RCRA Generators (RCRA GEN) database and facilities that once, but no longer generate hazardous waste are noted as RCRA Non-Gen Sites. This database includes facilities that generate at least 1,000 kg/month of non-acutely hazardous waste or 1 kg/month of acutely hazardous waste, referred to as large-quantity generators, and those that generate less than 1,000 kg/month of non-acutely hazardous waste, referred to as small-quantity generators and those that generate less than 100 kg/month of non-acutely hazardous waste, referred to as very small-quantity generators. RCRA facilities which have had a release of hazardous waste or constituents to the environment, for which the government is requiring corrective action, are tracked in the Corrective Action Tracking System (RCRA CORRACTS) database, while generators that are known to have violated RCRA regulations are tracked in the RCRA violations and enforcement (RCRA Viol). These violations can be the result of paperwork problems and are not necessarily related to releases of hazardous materials.

Three RCRA CORRACTS sites, no RCRA TSD sites, no RCRA GEN sites and two RCRA Non-Gen sites were identified within the study radii. The closest RCRA CORRACTS site is identified as Mountain Chemical, Inc., at 16035 W. 4th Avenue and is located approximately 0.72 miles south and cross-gradient of the subject property. Mountain Chemical recycled industrial hazardous waste at this location in the 1970s and 1980s. A RCRA Compliance Audit conducted in 1984 identified concerns with the storage and management of the waste materials. At the time of the audit, the state inspectors collected three composite soil samples from the property and analysis identified low levels of metals and volatile organic compounds (VOCs). Additional soil sampling was recommended. No documents associated with any additional sampling were identified in the CDPHE files, however, it was noted that subsequent to the audit, the company was placed in Chapter 7 bankruptcy. The facility was later closed under the supervision of the CDPHE and it was noted that remedial activities were completed in 1991. Based on its distance, gradient position relative to the subject property and regulatory status, this RCRA CORRACTS site is not considered an REC to the subject property.

The two remaining RCRA CORRACTS sites are located 0.75 miles east and 0.75 miles northwest and cross-gradient of the subject property, and clean-up actions have been completed at both sites. Based on their distances, gradient position relative to the subject property and regulatory status, neither of these RCRA CORRACTS sites is considered an REC to the subject property.

Both of the listed RCRA Non-Gen sites were determined to be located beyond the subject and adjoining properties. RCRA GEN/RCRA Non-Gen sites located beyond the subject and adjoining properties are generally not considered RECs.

6.4 ERNS Incidents and SPILLs Sites

The Emergency Response and Notification System (ERNS) is a national database containing records of releases of oil and hazardous substances reported to the USEPA, U.S. Coast Guard, the National Response Center and the Department of Transportation, since 1986. The SPILLs database is an inventory of emergency response actions and spill releases tracked by the Colorado Department of Public Health and the Environment (CDPHE).

No ERNS incidents and no SPILLs sites were identified within the study radius.

6.5 FINDS Sites

The Facility Index System (FINDS) report is a computerized inventory of all facilities that are regulated or tracked by the USEPA. These facilities are assigned an identification number that serves as a cross-reference for other databases in the USEPA's program system. This includes properties tracked through the Integrated Compliance Information System (ICIS) for Air, the National Pollutant Discharge Elimination System (NPDES), Resource Conservation and Recovery Act Information (RCRA), the Toxic Inventory Information System (TRIS) and the Toxic Substances Control Act (TSCA).

Seven FINDS sites were identified within the study radius. The appearance of a site in these databases does not, in itself, indicate an environmental concern, but is used more as an indication of the types of operations occurring at these facilities. Therefore, FINDS sites that are beyond the subject property or an adjoining property are not generally considered RECs. None of the identified FINDS sites included either the subject or an adjoining property.

6.6 State/Tribal Hazardous Waste Sites

State/Tribal Hazardous Waste Sites are the equivalent to SEMS. These sites may or may not already be listed on the federal SEMS list. Priority sites planned for cleanup using state funds (equivalent of Superfund or NPL) are identified along with sites where cleanup will be paid for by potentially responsible parties.

The State of Colorado does not maintain a State Hazardous Waste Sites database.

6.7 State/Tribal Hazardous Waste Facilities and Solid Waste Landfills and Facilities

The Hazardous Waste Facilities, Solid Waste Disposal Facilities and Landfill Database (SWL) is a collection of known regulated and unregulated solid waste landfills, hazardous waste facilities, incinerators and transfer stations.

No SWL sites were identified within the study radius.

6.8 State/Tribal LUST & UST Sites

The Leaking Underground Storage Tank (LUST) database is a listing of confirmed or suspected releases from underground storage tanks that have been reported to the state. The state Underground Storage Tank (UST) database is an inventory of all regulated USTs and above ground storage tanks (ASTs).

Three UST sites, one AST site and twelve LUST sites were identified within the study radii. None of the UST sites or the AST site were located on either the subject property or an adjoining property. UST/AST sites located beyond the subject and adjoining properties are generally not considered RECs unless the site is known or suspected of having had a release and is, therefore, listed on the LUST database.

The closest LUST/UST site, Mountain View Trailer Village at 16100 S. Golden Road is located at its closest point approximately 165 feet northeast and down-gradient of the subject property with the former tank hold located approximately 415 feet northeast of the subject property. In November 1998, one 4,000 gallon and

two, 1,100 gallon gasoline USTs assumed to have been installed in the 1930s, were removed from this property. All of the tanks were reported to be in fair condition with evidence of some corrosion and pitting; however, no evidence of a release was reported. Subsequent to the removal of the tanks, soil was collected from the bottom and ends of the tank hold, and nine of the samples were analyzed for the presence of the petroleum constituents benzene, toluene, ethyl benzene and xylene (BTEX) and total volatile petroleum hydrocarbons (TVPH) and three of the samples were analyzed for the presence of lead; groundwater was not encountered during the assessment. Analysis either did not detect any petroleum constituents or detected the constituents in concentrations below state clean up action levels. In December 1998, the State of Colorado Oil Inspection Section, now known as the Colorado Division of Oil and Public Safety (OPS) determined that no additional assessment efforts were required and the LUST case was closed. Based on its gradient position relative to the subject property and its regulatory status, this LUST site is not considered an REC to the subject property.

The next closest LUST/UST site is identified as Makris Property/Golden Properties at 15970 S. Golden Road and is located approximately 0.12 miles northeast and down-gradient of the subject property. One 6,000 gallon gasoline UST and one 8,000 gallon gasoline UST, associated with a former gas station at this site, were removed in November 1991, and it was noted that visibly stained soil was identified during tank removal activities. Additional contaminated soil was removed in early December 1991, approximately 500 cubic yards total. Subsequent to the second round of soil removal, five monitoring wells were installed and groundwater was sampled for the presence of BTEX and total petroleum hydrocarbons (TPH), and analysis confirmed that groundwater had been impacted, although it was noted that the contaminant impact was limited to the former gas station property. On-going groundwater monitoring confirmed that concentrations of the petroleum constituents were decreasing and that the extent of the contaminant impact was also decreasing through natural attenuation. By 1995, monitoring data confirmed that concentrations of petroleum constituents were either not detected or were detected in concentrations below state clean up action levels. In July 1995, the Oil Inspection Section determined that no further action was required and the LUST case was closed. Based on its distance, gradient position relative to the subject property, and regulatory status, this LUST site is not considered an REC to the subject property.

The next closest LUST/UST site, 7-Eleven #25581 (gas station no longer operational) at 16400 S. Golden Road is located approximately 0.18 miles northwest and cross-gradient of the subject property as groundwater flow is northerly at this location. In May 2010, the UST system at the former gas station was being replaced and during the removal of the older USTs, visibly stained soil was identified. As that time, soil within the tank hold was field screened utilizing a photo ionization detector (PID) and vapors were detected, and upon the removal of additional soil, groundwater was encountered in the tank hold and an oily sheen was observed on the water. Subsequently, approximately 234 cubic yards of impacted soil were removed from the site. During the following months, fifteen groundwater monitoring wells were installed on and down-gradient (northerly) of the gas station property with groundwater analyzed for the presence of BTEX, TVPH and the gasoline additive methyl tert butyl ether (MTBE). Analysis confirmed that groundwater beneath and down-gradient of the subject property had been impacted. In an effort to reduce the contaminant impact, a mobile multi-phase extraction (MPE) program was initiated in 2011. The MPE system removes/extracts impacted vapor and liquid from the subsurface through a series of wells and then removes and treats the impacted material. In conjunction with the MPE program, injections of a chemical reagent which degrades petroleum hydrocarbons were initiated in 2012. The MPE system was utilized in 2013 and 2014 and during this period additional injection events were conducted. Groundwater monitoring confirmed that these remedial actions were successful in reducing contaminant concentrations and by 2016, analysis confirmed that contaminant concentrations remained above state clean up action levels in only one area on the eastern portion of the site. Computer modeling (fate and transport modeling) conducted by both the OPS and the 7-Eleven consultant confirmed that the remaining contaminant plume was stable and would not migrate off site and that

contaminant concentrations would continue to decrease through natural attenuation. Based on this information, the OPS closed the LUST case in September 2016. Based on its distance and gradient position relative to the subject property, this LUST site is not considered an REC to the subject property.

The next closest LUST site is identified as Former Gas Station at 16415 S. Golden Road and is located approximately 0.21 miles northwest and cross-gradient of the subject property. No documents associated with this release event were identified at the OPS, however, it was noted that a release was identified during a site assessment and that the LUST case was closed in February 2018. Based on its distance, gradient position relative to the subject property, and regulatory status, this LUST site is not considered an REC to the subject property.

All of the remaining LUST sites are located 0.27 miles or greater and cross or down-gradient of the subject property and all of the associated release events have been closed. Based on their respective distances, gradient positions relative to the subject property and regulatory status, none of these LUST sites is considered an REC to the subject property.

In addition, the State of Colorado typically does not hold owners or operators of a property financially responsible for the cleanup of petroleum contamination where the contamination has come onto the property solely as the result of subsurface migration from a source outside the property and the owners or operators did not cause, contribute to or aggravate the release. The probability that the security holder of the subject property would be financially responsible from a potential off-site release from these sites is likely limited. For this reason and for the reasons listed above, it is 916 Consulting's opinion that the identified LUST, UST and AST sites do not pose a significant environmental concern to the subject property.

6.9 Federal Brownfield, IC and EC Sites

Federal Institutional Controls (IC) and Engineering Controls (EC) are the database of federal remedial sites that have either an engineering or an institutional control. The data includes the control and the media contaminated. The EPA Brownfield Management System (BMS) is a database designed to assist EPA in collecting, tracking, and updating information, as well as reporting on the major activities and accomplishments of the various Brownfield Grant Programs. The database defines a brownfield site as "real property where expansion or redevelopment is complicated by actual or perceived environmental contamination.

No Federal Brownfield sites and no Federal IC or EC regulatory sites were identified within the study radius.

6.10 State/Tribal IC/EC, VCP and Brownfields Sites

State/Tribal Brownfields is a listing of all former industrial properties that lie dormant or underutilized due to liability associated with real or perceived contamination. Some sites are noted as having institutional controls placed on them. The Brownfields Management System (BMS) is an analytical database designed to assist EPA in collecting, tracking, and updating information, as well as reporting on the major activities and accomplishments of the various Brownfield Grant Programs. The database defines a brownfield site as "real property where expansion or redevelopment is complicated by actual or perceived environmental contamination.

State/Tribal VCP is a listing of all sites in the Voluntary Cleanup Program. Some VCP sites are noted as having institutional controls (IC) or engineering controls (EC)/Activity and Use Limitations (AULs) placed on them.

One State/Tribal VCP site, one Brownfield regulatory site and no State/Tribal IC/EC (AUL) sites were identified within the study radii. The Brownfield site, the Pleasant View PCE, is cross-listed as a SEMS Archive site and was discussed in Section 6.2.

The VCP site is identified as 880-890 McIntyre Street and is located approximately 0.38 miles southeast and cross-gradient of the subject property. The site was reportedly vacant at the time the VCP application was submitted, however it was noted that past usages included restaurant equipment storage and auto body repair and auto maintenance. A limited subsurface assessment was conducted in 2013, and groundwater samples were collected at the four corners of the property and the groundwater samples were analyzed for a suite of VOCs. Analysis identified concentrations of the solvent tetrachloroethylene (PCE) in all of the groundwater samples, however, the PCE concentrations were above state clean-up action levels only in the groundwater samples collected from the eastern portion of the site, and it was noted that an active dry cleaner adjoined the site to the east. As PCE was the only solvent detected, it was concluded that the contaminant impact originated from the off-site dry cleaner, and not from any former on-site activities. The CDPHE concurred and issued a No Further Action Determination. Based on its distance and gradient position relative to the subject property, this VCP site is not considered an REC to the subject property.

6.11 OTHER Regulatory Sites

OTHER Regulatory Sites may include the following databases. USGS/EPA Federal Land Use Database of lands owned or administered by the Federal Government, including the Bureau of Land Management, the Bureau of Reclamation, the U.S. Department of Agriculture Forest Service, the Department of Defense, the U.S. Fish and Wildlife Service, the National Park Service, the Tennessee Valley Authority, and other agencies. Only areas of 640 acres or more are included. Descriptive information includes the name and type of the Federal land and the administering agency. Indian Lands, which are defined as areas administered by the Bureau of Indian Affairs of 640 acres or more, administered by the Bureau of Indian Affairs. Included are Federally-administered lands within a reservation which may or may not be considered part of the reservation.

OTHER sites also include those locations listed on the United States Department of Justice National Clandestine Laboratory Register (CDL). This is a database of addresses of some locations since 2003, where law enforcement agencies reported they found chemicals or other items that indicated the presence of either clandestine drug laboratories or dump sites.

No OTHER regulatory sites were identified within the study radii.

6.12 Environmental Database Summary

Findings/Opinions: 916 Consulting did not identify activities at the subject property or at neighboring properties that would indicate a significant potential for RECs, based on the information contained in the databases reviewed.

The preliminary EDR Report provided a list of sites for which the exact locations could not be identified. 916 Consulting reviewed the list of “unplottable” sites and zip code listed sites and determined that none of these sites is located within the study radii.

Recommendations: No further investigations or actions are recommended at this time.

6.13 Environmental Superliens

Many states have instituted a law that would allow environmental authorities to place a first priority lien on the Property (an "environmental superlien law"). Because an environmental superlien could take precedence over the Mortgage, an attempt has been made, based on the information reviewed, to determine if any conditions are present which could result in such a lien being imposed on the Property.

Based on available information, the law of the Property Jurisdiction, the State of Colorado, does not appear to provide for an "environmental superlien law".

No conditions were identified which would be considered likely to result in an environmental superlien being imposed on the Property.

7.0 SITE RECONNAISSANCE

During the site reconnaissance, 916 Consulting visually and/or physically observed the subject property and improvements. The purpose of the site reconnaissance is to collect information and make observations to help identify recognized environmental conditions in connection with the subject property.

7.1 Visual/Physical Observations

During the site reconnaissance, 916 Consulting looked for the following visual/physical indications of potential environmental concern.

POTENTIAL CONCERNS	COMMENTS
Hazardous Substances and Petroleum Products in Connection with Identified Uses/Drums, Totes, and Intermediate Bulk Containers/Unidentified Substance Containers/Hazardous Substance and Petroleum Product Containers Not in Connection With Identified Uses:	As discussed in Section 5.0, for the past ten years, the former resident refurbished and/or repaired vehicles. At the time of the assessment, there were numerous vehicles that were either parked for storage or were in various states of refurbishment or dismantlement, with engines, transmissions, other auto parts, generators, equipment, tools, building materials, junk and debris situated throughout the property. Also stored on the property grounds were a wide variety of automotive fluids, fuels, paints, and solvents including the following: Two, 55-gallon, unlabeled metal drums presumed to contain used oil, two, 55-gallon metal drums of antifreeze/coolant, one solvent based parts washer mounted on a 55-gallon metal drum, four, 5-gallon plastic containers of gasoline, two 5-gallon cans of parts cleaner, approximately ten, 5-gallon plastic containers of paint, water sealant and roof coating, and numerous one-gallon plastic containers of oil and antifreeze. In addition to the labeled containers, one unlabeled blue poly 55-gallon drum and one, unlabeled, 30-gallon metal drum, both containing unknown liquids were observed. Also noted were approximately ten automotive batteries, two, 100-pound propane cylinders and numerous 20-pound propane cylinders, two cylinders of welding gases and approximately 30 tires. Materials stored in the sheds and trailers included numerous pint to gallon size containers of automotive maintenance fluids including oil, antifreeze, brake fluid, cleaners, solvents, lubricants, grease and adhesives. It should be noted that the storage of these materials was haphazard and the materials were not stored on secondary containment.

	In addition, quart and gallon size plastic containers of paint and drywall patch, tubes of caulk, four 20-pound propane cylinders and general home cleaning supplies were observed in the residence.
Strong, Pungent, or Noxious Odors and their Sources:	No strong, pungent, or noxious odors were detected or reported.
Standing Surface Water and Pools or Sumps Containing Liquids Likely to be Hazardous Substances or Petroleum Products:	No standing surface water, pools or sumps containing liquids likely to be hazardous substances or petroleum products were observed or reported.
Stains or Corrosion on Floors, Walls, or Ceilings:	No signs of interior stains or corrosion on floors, walls or ceilings, likely to have been generated by hazardous substances or petroleum products were observed or reported.
Drains and Sumps:	No drains or sumps were observed or reported.
Pits, Ponds or Lagoons:	No pits, ponds or lagoons associated with waste disposal or waste treatment were observed or reported on either the property or on any adjoining property.
Stained Soil or Pavement:	While no obviously stained soil was identified, the majority of the property grounds were obscured by the vehicles and other parts and equipment; however, based on approximately ten years of automotive salvage activities and unknown storage, handling and disposal practices, it is highly likely that surficial soils and possibly underlying soils have been impacted by automotive fluids, solvents and fuel.
Stressed Vegetation:	No stressed vegetation was observed or reported.
Solid waste:	No areas that are apparently graded by non-natural causes (or filled with fill of unknown origin) suggesting trash, construction debris, demolition debris, or other solid waste disposal; and mounds or depressions suggesting trash or other solid waste disposal were observed or reported. No generation of solid waste is currently occurring on the property.
Wastewater:	No discharges of wastewater or other liquids into a drain, ditch, underground injection system, or stream on or adjoining the subject property were observed or reported. Additionally, no operations likely to result in a significant wastewater discharge were observed or reported.
Wells:	No wells, including dry wells, monitoring wells, irrigation wells, injection wells, abandoned wells, or other wells, were observed or reported.

Septic Systems or Cesspools:	No indications of on-site septic systems or cesspools were observed or reported. However, as discussed in Section 5.1.2, when the property was initially developed in the mid 1950s, the residence utilized a septic system with an approximate 900 gallon concrete tank. No records/information indicating whether the tank and associated piping were removed were identified.
Air discharges:	No operations likely to result in significant air discharges were observed or reported.
Medical/biological wastes stored on the property:	No medical or biological wastes were observed or reported.
X-ray or other radioactive activities conducted on the property:	No x-ray machines utilizing a radioactive source or other radioactive activities were observed or reported.
Other:	High voltage power lines were observed along the southern boundary of the subject property. In recent years, there has been concern that the electromagnetic fields (EMF) that radiate from power lines cause cancer. In 1995, the American Physical Society, the world's largest association of physicists, released a statement saying it can find no evidence supporting the link to cancer. The society, which has studied power-cancer issues since 1989, initiated a study in 1994 to serve as the basis for a position on the dispute. The study's author reviewed the existing literature of more than 1,000 papers and conducted interviews with specialists in the field. The society's statement, which acknowledged research continues in the field, said existing reports and data thus far "show no consistent, significant link between cancer and power line fields." Furthermore, "the conjectures relating cancer to power line fields have not been substantiated." Therefore, 916 Consulting does not recommend any additional study or action regarding the power lines at this time.

Findings/Opinions: For approximately ten years, the former resident restored and/or repaired vehicles, and at the time of the assessment, there were numerous vehicles and vehicle parts that were either parked for storage or were in various states of refurbishment or dismantlement. Additionally, new and waste automotive fluids, solvents and fuel were stored in multiple drums and containers throughout the property, none stored over secondary containment and several containers were not labeled as to their contents.

No obviously stained soil was identified, however, the majority of the property grounds were obscured by the vehicles and other parts and equipment and as automotive salvage activities and unknown storage, handling and disposal practices have occurred for approximately ten years, it is highly likely that surficial soils and possibly underlying soils have been impacted by automotive fluids, solvents and fuel, and this is considered an REC.

The property initially utilized a septic system, and no records/information indicating whether the septic tank and associated piping have been removed were identified.

Recommendations: All of the vehicles and all of the associated automotive fluids, solvents, fuel and auto parts should be removed from the property. While some of these materials can be sold or sent for recycling, most of the auto fluids including those unknown materials will most likely need to be sampled prior to removal and must be removed by a certified hazardous waste firm.

Subsequent to the removal of all of the materials, a limited subsurface assessment should be conducted in order to determine if past operations and associated storage, handling and disposal practices have impacted the property.

Finally, during any demolition/redevelopment activities, the contractor should be aware that the former septic system may still be present.

7.2 Storage Tanks

An effort was made to identify all ASTs, USTs, vent pipes, fill pipes or access ways indicating USTs. In addition information from local records and historical maps and information regarding historical heating sources were reviewed.

POTENTIAL CONCERNS	COMMENTS
Visual indication of ASTs:	916 Consulting did not identify any visual indications of ASTs on the subject property.
Visual indications of USTs:	916 Consulting did not identify any visual indications of USTs on the subject property.
Records of USTs:	No records indicating the past or current presence of USTs on the property were identified.
Current HVAC and water heater/boiler fuel systems and fuel:	Heating is provided by a wood burning stove and propane fired heaters. Cooling is provided by a swamp cooler. Hot water is provided by either an electric on-demand unit or a small capacity propane fired water heater.
Historical usage of heating oil:	There is no indication that the subject property ever used heating oil as a heat source.

Findings/Opinions: No information was obtained or observations made regarding USTs or ASTs at the subject property that would warrant additional actions or investigations.

Recommendations: No further actions or investigations are recommended at this time.

7.3 Polychlorinated biphenyls (PCBs)

916 Consulting relied on visual observations and interviews with the property contacts and/or the utility company to identify known or potential PCB-containing electrical or hydraulic equipment. Where identified, efforts were made to determine ownership and to identify indications of leakage.

POTENTIAL CONCERNS	COMMENTS
Pole-mounted Transformers:	No pole-mounted transformers were identified on the subject property. While currently not utilized, service is available to the subject property from one pole-mounted transformer located on the west adjacent property, just off the subject property's southwest boundary. According to property ownership and labeling, the transformer is owned by the local utility. The transformer was observed to have a non-PCB sticker affixed to it. No signs of leakage were noted.
Pad-mounted Transformers:	No pad-mounted transformers were identified on the subject property.
Hydraulic Elevators, Lifts or Compactors:	No hydraulic elevators, lifts or compactors were observed or reported at the subject property.
Other:	No other concerns relating to PCBs were identified.

Findings/Opinions: No information was obtained or visual indications made that would indicate a significant potential for RECs related to PCBs.

Recommendations: No additional investigations or actions are warranted at this time.

8.0 COMMON NON-SCOPE ISSUES

8.1 Preliminary Asbestos Evaluation

Asbestos-Containing Building Materials - Asbestos is a naturally occurring mineral fiber that was once widely used in building materials and products for its thermal insulating properties and fire resistance. EPA defines asbestos-containing material (ACM) as material that contains more than 1% asbestos. Building products containing ACM are often referred to as asbestos containing building materials (ACBM). Undisturbed ACBM generally does not pose a health risk. However, ACBM may pose an increased risk if damaged, disturbed in certain manners, or if it deteriorates so that asbestos fibers can be released into building air.

Asbestos has been specifically designated as a hazardous substance pursuant to CERCLA but ACBM abatement costs generally are not recoverable under CERCLA. There are other federal and state environmental statutes that impose obligations with respect to ACM. Although CERCLA does not provide a remedy for asbestos abatement, property owners may still be subject to liability for exposure to asbestos fibers under other federal or state environmental statutes and common laws. For example, under the Clean Air Act (CAA), EPA adopted a National Emission Standard for Hazardous Air Pollutants (NESHAP) for asbestos that regulates or restricts certain uses of asbestos and imposes certain work practices for demolition and renovation projects that disturb certain thresholds of regulated ACM. Local rules may be more stringent than the federal asbestos NESHAP.

Many building materials such as structural steel fireproofing, acoustic finishes, ceiling texture, ceiling tile, suspended ceiling panels, textured and elastomeric paints, window putty, flexible duct connectors, rubbery pipe insulation tape, building wiring insulation, pipe insulation, boiler insulation, vessel insulation, interior plaster, and duct insulation commonly contained asbestos until the late 1970s. Other types of ACMs were commonly used until the middle to late 1980s such as drywall, joint compound, exterior stucco, sheet vinyl flooring, vinyl flooring products, flooring and other mastics (adhesives), roof tiles and coatings, asbestos-cement products, and flues. Under the Toxic Substance Control Act (TSCA), EPA bans the use of asbestos in many products. Building materials that post-date the 1989 and 1993 partial bans, but pre-date the 2019 significant new use rule (SNUR), may contain asbestos. Nevertheless, NESHAP requires sampling prior to renovation and demolition activities regardless of the age of the building.

The following types of building materials may still contain asbestos: Vinyl-asbestos tile, Roofing felt, Roofing coatings, Plastic roof cement, Caulking putties, Construction mastics, Textured coatings, Asbestos-cement items (shingles, corrugated sheets, flat sheets, pipes, flues), Pipeline wrap, and Millboard.

Asbestos containing building materials are generally classified as friable or non-friable. Friable materials can be expected to emit asbestos fibers into the air. Non-friable ACM is generally a potential concern only if it becomes damaged and friable.

EPA recommends that owners and managers of office buildings, shopping centers, apartment buildings, hospitals, and similar facilities that may contain ACM, implement an Asbestos Operations and Maintenance (O&M) program to minimize risk posed by ACBM. EPA suggests that ACBM O&M plans should include work practices so that ACM is maintained in good condition, to ensure proper cleanup of asbestos fibers previously released, to prevent further releases of asbestos fibers, and to monitor the condition of ACBM. OSHA also regulates worker exposure to asbestos.

Efforts were made to identify the presence of the most obvious and common ACM. The potential for the presence of ACM was evaluated based on the age of the improvements, dates of renovation, and other relevant information. No comprehensive asbestos survey was conducted. Conclusions are based on observations of representative areas only. A finding of "no further action is warranted" or "ACM is not a significant concern" cannot be interpreted as the building is asbestos free.

Findings/Opinions: During the assessment, 916 Consulting observed suspect non-friable materials including vinyl floor tile and mastic, tile and carpet mastic, and drywall systems (drywall, tape, and joint compound) as well as roofing materials. All of the materials were in average to good condition.

Recommendations: No further study or action is recommended at this time.

NESHAP regulations require sampling potential ACM prior to demolition or extensive renovation, regardless of the date of construction; therefore, if such activities are planned, it may be required to conduct a survey of the entire facility, or that portion slated for renovation or demolition, before initiating such destructive activities. That survey should include an assessment of all subject building materials, including those in areas which are normally inaccessible. Any material found to be ACM should be handled in accordance with applicable regulations.

8.2 Radon Review

Radon is a colorless, odorless radioactive gas that is produced naturally in the soil from the decay of uranium, radium, and thorium in soil, rock, and groundwater. As these elements degrade, they release radon gas. As a building is often warmer and has lower air pressure than the surrounding soil, gases in the soil, including radon, can migrate into the building.

The most common routes of radon entry into a building are:

- Spaces between basement walls and the slab.
- Cracks in foundations and/or walls.
- Openings around sump pumps and drains.
- Construction joints and plumbing penetrations.
- Crawl spaces, especially those with dirt floors
- Well water with high radon concentrations.

When a person is exposed to radon over many years, the exposure can increase the risk of lung cancer. Radon is the second-leading cause of lung cancer in the United States, only smoking causes more lung cancer. Radon is the leading cause of lung cancer in non-smokers. Each year, about 21,000 deaths in the United States are related to radon-caused lung cancer. The risk of lung cancer from radon is almost 10 times higher for smokers compared to those who have never smoked.

When radon becomes trapped in buildings and concentrations accumulate and increase indoors, exposure to radon can become a concern. Actual radon exposures can be affected by diverse factors such as building construction, heating, ventilation, and air conditioning (HVAC) systems, and occupancy patterns.

The United States Environmental Protection Agency (USEPA) has divided the country into three radon zones based on the potential for indoor radon levels. Counties in Radon Zone 1 have a predicted average indoor radon screening level greater than the 4.0 picocuries per liter (pCi/L), Radon Zone 2 counties have a predicted average indoor radon screening level between 2 and 4 pCi/L, and Radon Zone 3 counties have a predicted average indoor radon screening level less than 2 pCi/L. EPA recommends homeowners take steps to reduce radon levels when homes have radon levels of 4 pCi/L or more. For new construction in Radon Zone 1 areas, EPA also recommends use of radon-resistant construction design. Because there is no known safe level of exposure to radon, EPA also recommends radon mitigation measures for homes with radon levels above 2 pCi/L.

The only way to know what the radon levels are inside a building is through measurement. In Colorado, radon measurement shall be conducted by, or under the direct supervision of, a licensed radon professional and all measurements shall be in accordance with the applicable ANSI/AARST radon measurement standard.

An evaluation was made to determine the potential for elevated levels of radon at the subject property based on the property's location, construction type and usage.

RADON FACTORS	COMMENTS
Radon Zone:	The subject property is located in Radon Zone 1, which has a predicted average indoor screening level of greater than 4 picocuries per liter (pCi/L). The USEPA action level for radon is 4 pCi/L.
Are There Regularly Occupied Subsurface or Ground Level Residential Units:	The residence is not currently occupied.
Results of Previous Tests on the Property:	No previous test results were made available to 916 Consulting.
Other:	The property does not appear to be located on or near sites that currently are or formerly were used for uranium, thorium or radium extraction or for phosphate processing.

Findings/Opinions: The subject property is located in an area with a propensity for elevated levels of radon.

Recommendations: Should the property be reoccupied, property ownership may wish to consider conducting short term radon testing. If the property is to be redeveloped, property ownership/development may wish to utilize radon resistant construction methods (i.e., the installation of a vapor barrier and/or mitigation systems) for any future development.

8.3 Lead-Based Paint Evaluation

Lead-Based Paint (LBP) - Lead is a soft, bluish metallic element that has been used in a wide variety of products. According to EPA, paint manufacturers frequently used lead as a primary ingredient in many oil-based interior and exterior house paints through the 1940s and gradually decreased its use in the 1950s and 1960s as latex paints became more widespread. The Federal Department of Housing and Urban

Development (HUD) estimated that 30 % of the houses built in the United States before 1978 contain some lead-based paint, and 44 % contain significant lead-based paint hazards. Lead from paint, chips, and dust can pose health hazards if not properly managed. The Consumer Product Safety Commission (CPSC) prohibited use of lead in paint for residential use in 1978 in concentrations greater than 0.05 percent lead by weight. It should be noted that the use of LBP in commercial and industrial buildings has not been prohibited.

Because CERCLA authorizes EPA to address releases of hazardous substances into the environment, the agency has limited authority to use the federal Superfund program to address exposure from interior LBP. In limited circumstances, EPA may use its CERCLA authority to conduct response actions for soils contaminated by a release of lead contaminated paint from building exteriors that pose a lead hazard and to prevent recontamination of soils that have been remediated. In general, EPA has determined that lead contamination in soils at or exceeding 400 parts per million in play areas and 1200 parts per million in other residential areas where children below 6 years of age are present may pose serious health risks that can justify time-critical removal actions. CERCLA generally does not provide cost recovery for LBP abatement. However, response costs for remediation of lead in soil may be recoverable even where the source of the presence of lead may be from damaged exterior LBP.

LBP debris from renovation or demolition projects can be regulated as a RCRA hazardous waste. EPA has also adopted certain work practices for renovation, repair, and painting projects that will disturb certain thresholds of LBP. OSHA also regulates worker exposure to lead.

Lead based paint that is in good condition is usually not a hazard. Peeling, chipping, chalking or cracking lead-based paint, however, is a hazard that needs immediate attention. Lead-based paint may also be a hazard when found on surfaces that children can chew or that get lots of wear and tear. These surfaces include windows and window sills, doors and door frames, stairs, railings and banisters, porches and fences. Lead dust can form when lead-based paint is dry scraped, dry sanded or heated. Dust also forms when painted surfaces bump or rub together. Lead chips and dust can get on surfaces and objects people touch. Settled lead dust can reenter the air when people vacuum, sweep or walk through it.

916 Consulting evaluated the potential for significant concerns relating to the presence of LBP at the subject property. The LBP evaluation was based on the age of the improvements, dates of renovation and other relevant information. As this evaluation does not consist of comprehensive survey of the property, a finding of “no further action is warranted” or “LBP is not a significant concern” can not be interpreted as the building is lead free. The majority of states do not recognize the use of lead test swabs as an approved method of testing for lead-based paint; therefore assumptions and recommendations regarding the presence of lead-based paint were made based on the age of the buildings and the observed condition of the painted surfaces.

LBP FACTORS	COMMENTS
Constructed Date:	1955
Property Usage:	Residential
Damaged or Peeling Paint:	No damaged or peeling paint was observed.
Previous LBP Tests:	916 Consulting was not provided with any previous LBP testing results.
LBP Notification Program:	The USEPA and HUD Real Estate Notification and Disclosure Rule as detailed in 24 CFR Part 35 and 40 CFR Part 745 *Lead; Requirements for Disclosure of Known Lead-Based Paint and/or Lead-Based Paint*

LBP FACTORS	COMMENTS
	Hazards in Housing, Final Rule, requires that, effective September 6, 1996, property owners that rent or sell housing built before 1978 disclose all known LBP and LBP hazards in the housing and any available reports on lead in the housing.
Findings/Opinions:	Based on the date of construction, it is possible that LBP was utilized and may be present on structural elements and/or in underlying layers of paint.
Recommendations:	No further study or action is recommended at this time. The paints should be sampled prior to any actions likely to impact them (e.g., sanding, scraping, heat-gun removal or demolition) or assumed to be LBP and handled in accordance with federal, state and local regulations. Additionally, should the property be reoccupied, property ownership should institute a LBP hazard notification program that is in compliance with the USEPA and HUD Real Estate Notification and Disclosure Rule. The program should take into account other federal state or local regulations that may apply.

8.4 Drinking Water Evaluation

Lead-in-Drinking-Water (LIW) - The major source of LIW is leaching of lead from household plumbing materials or water service lines used to bring water from the main to the home. Lead can leach into drinking water through contact with the plumbing, solder, fixtures and faucets (brass), and fittings. The amount of lead in drinking water will be influenced by the type and amount of minerals in the water, how long the water stays in the pipes, the amount of wear in the pipes, and the water's acidity and temperature.

Since 1986, the Safe Drinking Water Act (SDWA) has required that only "lead free" pipe, solder, or flux can be used in plumbing in residential or non-residential facilities providing water for human consumption. The SDWA also required businesses selling plumbing supplies to sell solder or flux that is "lead free" after August 6, 1996. Moreover, after that date the SDWA prohibited any person from introducing into commerce any solder or flux containing lead unless a label was attached to the solder or flux stating that it is illegal to use the solder or flux to install or repair plumbing providing water for human consumption. However, "lead free" does not mean "no lead." Products such as solders and flux may be considered "lead free" if they contain less than 0.2% lead. Similarly, pipes and pipe fittings will be considered "lead free" if they contain less than 8% lead. Thus, lead may still be introduced in new homes with brass or chrome-plated brass faucets and fixtures.

The SDWA requires EPA to establish enforceable maximum contaminant levels (MCLs) for a variety of contaminants in drinking water. Because lead contamination of drinking water often results from corrosion of the plumbing materials belonging to water system customers, EPA established a treatment technique rather than an MCL for lead. A treatment technique is an enforceable procedure or level of technological performance which water systems shall follow to ensure control of a contaminant. The treatment technique regulation for lead (referred to as the Lead and Copper rule) requires water systems to control the corrosivity of the water. The regulation also requires systems to collect tap samples from sites served by the system that are more likely to have plumbing materials containing lead. If more than 10% of tap water samples exceed

the lead action level of 15 parts per billion, then water systems are required to take additional actions. Local rules may be more stringent than the federal SDWA.

The potential for problems relating to elevated levels of contaminants, particularly lead, was evaluated.

DRINKING WATER FACTORS	COMMENTS
Source of Drinking Water:	916 Consulting obtained information pertaining to the source and the regulatory compliance of the drinking water supplied to the subject property. The subject property receives its drinking water from the Pleasant View Water and Sanitation District which maintains a purchase agreement with the Consolidated Mutual Water Company. The primary source is surface water drawn from the Clear Creek watershed which is supplemented by high mountain reservoirs that collect snowmelt runoff. According to the 2023 Water Quality Report, the water is tested before it enters the distribution system, and the water supplied to the property reportedly meets federal and state drinking water standards, including those for lead and copper.
Other:	No concerns regarding drinking water were identified by 916 Consulting.

Findings/Opinions: No information was uncovered that would indicate concerns related to drinking water quality at the subject property.

Recommendations: No further investigation or action is warranted at this time.

8.5 Microbial Contamination (Mold)

Molds are organisms that belong to the Fungi Kingdom. Molds are present virtually everywhere in the outdoor and indoor environments. Molds lack chlorophyll and survive by digesting organic materials for food such as some types of building materials. To grow, molds require a food source and moisture. Molds can produce toxic substances called mycotoxins that may result in human health effects. Some compounds produced by molds are volatile and are released directly into the air. These are known as microbial volatile organic compounds (mVOCs). In addition, spores may contain allergens that can remain allergenic for years, even if the mold is dead.

Currently, there are no federal regulations or standards for airborne mold contaminants. However, EPA and some states or local jurisdictions have issued publications discussing mold issues. In addition, under the OSHA General Duty Clause, an employer has an obligation to protect workers from serious and recognized workplace hazards, even where there is no standard. Thus, it is possible that the OSHA general duty clause may impose a duty on employers to disclose hazards relating to mold to employees, although the disagreement on the degree of hazard, if any, makes this uncertain. Significant mold contamination may fall under the general disclosure requirements for real estate transactions in various jurisdictions.

A visual/olfactory survey for mold was conducted. The survey was limited to observations in the areas walked and should not be considered a comprehensive survey of the property. No sampling was conducted.

No assessment or investigation behind walls or in any other generally inaccessible areas was performed. In addition, inquiries were made of the owner and/or manager of the subject property regarding past and current leaks or any known mold issues, any tenant complaints regarding health problems, musty odors or water leaks. In addition, when applicable, areas of reported or likely significant leaks or water intrusion/penetration were inspected.

POTENTIAL CONCERNS	COMMENTS
Microbial Growth:	No visual or olfactory evidence of mold growth was observed in the portions of the residence inspected by 916 Consulting, and air supply and return vents did not exhibit significant particulate buildup, and no evidence of potential air quality impacts was detected or reported.
Water Intrusion:	No defective or problematic building materials or systems were identified that will result in water intrusion.

Findings/Opinions: No visual, olfactory or other observations were identified indicative of the presence of mold in the residence.

Recommendations: No further actions or investigations are recommended at this time.

8.6 Indoor Air Quality

There are many sources of indoor air pollution. These include combustion sources such as oil, gas, kerosene, coal, wood, tobacco products, asbestos-containing materials, wet or damp carpet, formaldehyde, certain pressed wood products, cleaning and maintenance chemicals, and pesticides. EPA estimates that indoor levels of air pollutants can be two to five times higher, and occasionally 100 times higher, than outdoor levels. In general, EPA does not regulate indoor air quality except to the extent that indoor air impacts are caused by releases of hazardous substances into subsurface soil or groundwater (vapor intrusion).

A visual/olfactory survey for potential indoor air pollution was conducted. The survey was limited to observations in the areas walked and should not be considered a comprehensive survey of the subject property. No sampling was conducted. No assessment or investigation behind walls or in any other generally inaccessible areas was performed. In addition, inquiries were made of the owner and/or manager of the subject property regarding indoor air quality.

POTENTIAL CONCERNS	COMMENTS
Combustion sources, smoking, off-gassing, dust, cleaning and maintenance chemical usage, pesticide application, painting, etc.:	No obvious visual or olfactory evidence suggestive of significant or pervasive indoor air quality issues was observed or detected.

Findings/Opinions: No visual, olfactory or other observations were identified that would indicate the presence of significant indoor air quality issues.

Recommendations: No further actions or investigations are recommended at this time.

8.7 Emerging Contaminants

As defined in ASTM 1527-21, hazardous substance means "those substances defined as a hazardous substance pursuant to CERCLA 42 U.S.C. § 9601(14), as interpreted by EPA regulations and the courts." There are some substances that non-environmental professionals and others have determined to be hazardous substances and have recently been defined as hazardous substances under CERCLA through interpretation by EPA regulations and the courts. These substances may include: (1) some substances that occur naturally or through biological digestion (for example, methane), and (2) substances about which human understanding is evolving (for example, per- and polyfluoroalkyl substances, also known as "PFAS"). These and any other "emerging contaminants," where they are not identified as a hazardous substance by CERCLA, as interpreted by EPA regulations and the courts, are not included in the scope of this practice. Some of these substances may also be considered a "hazardous substance" (or equivalent) under applicable state laws

A preliminary evaluation was made to determine the potential for the presence of methane and PFAS at the subject property based on regulatory information, and current and historical activities at the subject and adjoining properties. The evaluation was limited and should not be considered a comprehensive assessment. No sampling was conducted.

POTENTIAL CONCERNS	COMMENTS
Potential sources of methane or PFAS on the subject or adjoining properties:	No obvious evidence suggestive of concerns related to methane or PFAS at the subject property or any adjoining properties was identified.

Findings/Opinions: No information was obtained or observations made regarding methane or PFAS at the subject property that would warrant additional actions or investigations.

Recommendations: No further actions or investigations are recommended at this time.

APPENDIX 1

PROPERTY PHOTOGRAPHS

ESA Photo 1:

Subject property, looking northeast from southwest corner

ESA Photo 2:

Driveway on the east side of the property, looking north

ESA Photo 3:

Vehicles stored on the property

Mansanarez Residence
16121 W. 10th Avenue
Golden, Colorado
916 Consulting Project No: 24-090

ESA Photo 4:

Vehicle engines

ESA Photo 5:

Auto parts and construction materials

ESA Photo 6:

Junk and debris

Mansanarez Residence
16121 W. 10th Avenue
Golden, Colorado
916 Consulting Project No: 24-090

ESA Photo 7:

Drums and containers

ESA Photo 8:

Tires

ESA Photo 9:

Drums-contents unknown

Mansanarez Residence
16121 W. 10th Avenue
Golden, Colorado
916 Consulting Project No: 24-090

ESA Photo 10:

Welding gas cylinders and gas cans

ESA Photo 11:

Parts washer

ESA Photo 12:

Vehicles, parts, equipment and junk

Mansanarez Residence
16121 W. 10th Avenue
Golden, Colorado
916 Consulting Project No: 24-090

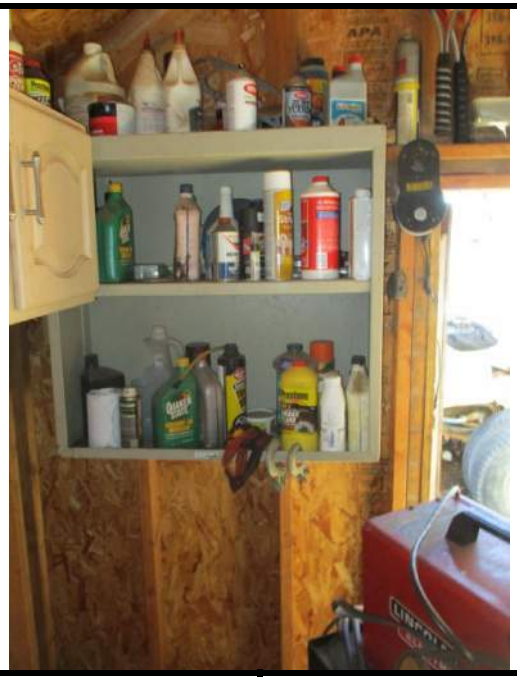

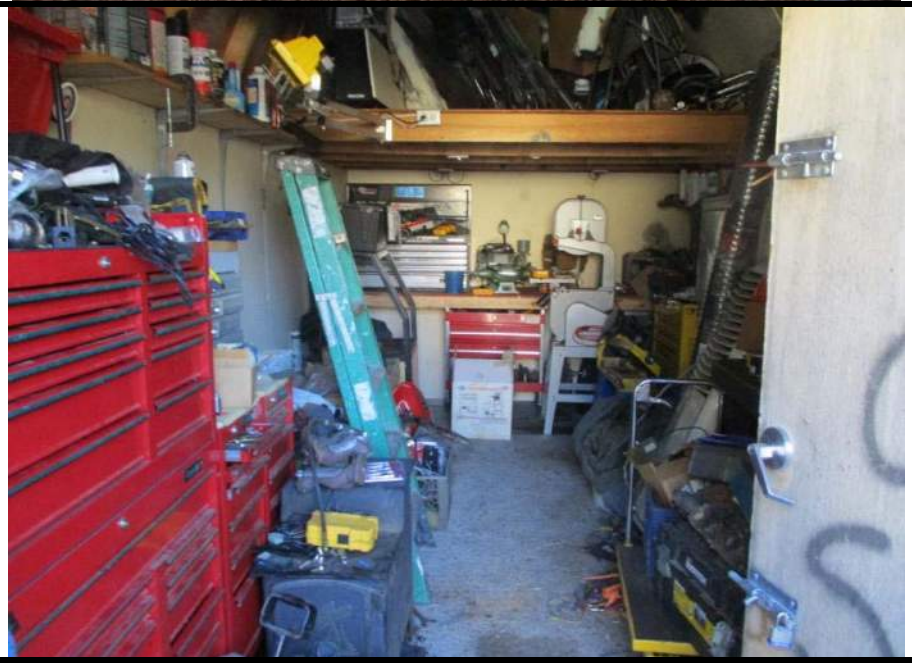

ESA Photo 13:

Automotive fluids, batteries and solvents

ESA Photo 14:

Automotive fluids in a storage shed

ESA Photo 15:

Storage shed

Mansanarez Residence
16121 W. 10th Avenue
Golden, Colorado
916 Consulting Project No: 24-090

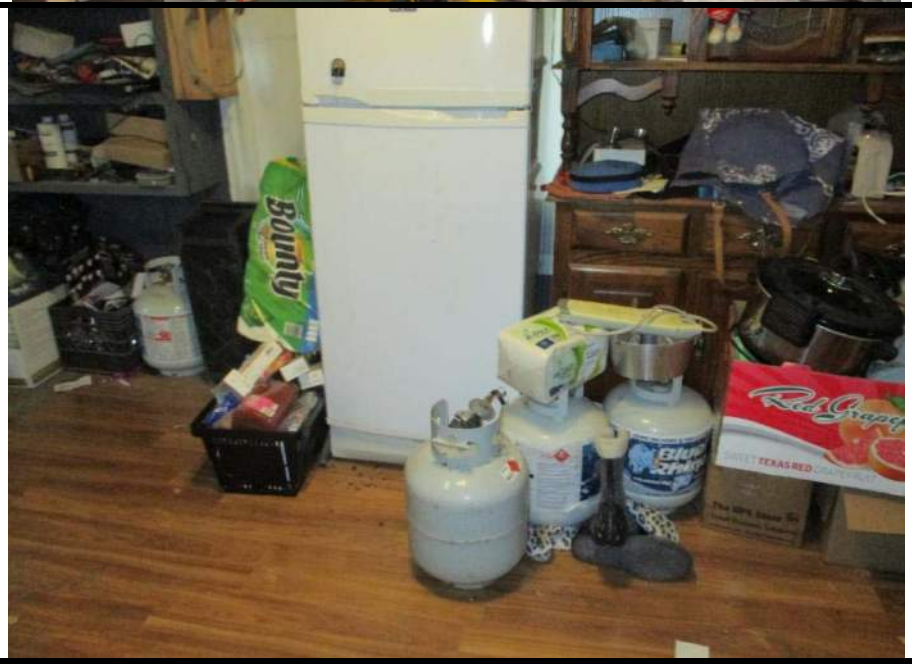

ESA Photo 16:

Automotive fluids in a storage shed

ESA Photo 17:

Electrical generator (in use)

ESA Photo 18:

Residence interior-propane cylinders for the refrigerator

Mansanarez Residence
16121 W. 10th Avenue
Golden, Colorado
916 Consulting Project No: 24-090

ESA Photo 19:

Residence interior

ESA Photo 20:

Residence interior

ESA Photo 21:

Residence interior

Mansanarez Residence
16121 W. 10th Avenue
Golden, Colorado
916 Consulting Project No: 24-090

ESA Photo 22:

Building crawlspace

ESA Photo 23:

Adjacent pole mounted transformer and high voltage power lines

ESA Photo 24:

North adjacent property

Mansanarez Residence
16121 W. 10th Avenue
Golden, Colorado
916 Consulting Project No: 24-090

ESA Photo 25:

West adjacent condominium complex

ESA Photo 26:

East adjacent single family residence

ESA Photo 27:

East adjacent Rock Rest Lodge

Mansanarez Residence
16121 W. 10th Avenue
Golden, Colorado
916 Consulting Project No: 24-090

ESA Photo 28:

South adjacent single family residence

ESA Photo 29:

South adjacent single family residence

ESA Photo 30:

South adjacent single family residence

Mansanarez Residence
16121 W. 10th Avenue
Golden, Colorado
916 Consulting Project No: 24-090

APPENDIX 2

LIST OF REFERENCES

SOURCES OF INFORMATION				
CONTACT OR AUTHOR	DOCUMENT/ORGANIZATION	DATE OF DOCUMENT OR CONTACT	PHONE NUMBER/ WEB ADDRESS	INFORMATION SOUGHT
United States Geologic Survey	United States Geologic Survey (USGS) Topographic Map/Historic Topographic Maps	1965; revised 1994	https://ngmdb.usgs.gov/topoview/viewer	Property setting, elevation, surface water bodies, historical uses, estimated groundwater flow
USEPA	Ground Water Handbook, Vol. 1, Ground Water and Contamination	September 1990	N/A	Groundwater flow direction
USEPA	Radon Zone Maps Residential Radon Survey	various dates	N/A	Radon Zones and levels
United States Dept. of Agriculture	Soil Survey of Golden Area, Colorado, Parts of Denver, Douglas, Jefferson, and Park Counties	Natural Resources Conservation Service Web Soil Survey	https://websoilsurvey.sc.egov.usda.gov/App/WebSoilSurvey.aspx	Subject property soils information
Environmental Data Resources (EDR)	Aerial Photographs	N/A	www.edrnet.com	Prior use history information
Google Earth	Aerial Photographs	N/A	https://www.google.com/earth/	Prior use history information
Jefferson County GIS	Aerial Photographs	N/A	https://gis.jeffco.us/webmaps/jmap/index.html	Prior use history information
Denver Public Library	City Directories	N/A	(720) 865-1821	Prior use history information
Mr. Michael Harris and on-line information	Jefferson County Department of Transportation and Development, Building Safety	November 7, 2024	(303) 271-8260 and https://citizenportal.jeffco.us/citizenportal/app/landing.	Historical building permits, construction dates, certificates of occupancy
Mr. Chris Malmgren, Fire Chief	Pleasant View Fire Department	November 12, 2024	(303) 277-9547	Historical records of environmental concerns, underground storage tank information
Ms. Madison Pitts, Supervisor and on-line information	Jefferson County Public Health, Environmental Health Services	November 12, 2024	(303) 232-6301 and https://citizenportal.jeffco.us/citizenportal/app/landing.	Past or present environmental concerns
On-line information	Jefferson County Assessor	November 7, 2024	https://www.jeffco.us/658/Assessor	Property size, age of developments.
Mr. Phil Hodgkinson	President, Grand American Inc., Rocky Mountain Region	November 12, 2024	(303) 297-8090	Historical information of the subject property, known or suspected environmental issues and previous reports.
Ms. Bonnie Mansanarez	Property Ownership	November 12, 2024	(831) 384-2516	Historical information of the subject property, known or suspected environmental issues and previous reports.
Ms. Deb Bowman, Office Manager and on-line information / 2023 Water Quality Report	Pleasant View Water and Sanitation District	November 12, 2024	(303) 279-3391 and https://www.cmwc.net/wp-content/uploads/2024/10/CONSOLIDATED-MUTUAL-MAPLE-GROVE-2024-CCR-.pdf	Information regarding the source and quality of potable water supplied to the subject property.
On-line information	Jefferson County Clerk and Recorder	November 7, 2024	https://www.jeffco.us/1027/Records-Search	Information regarding environmental liens

APPENDIX 3

MUNICIPAL AND REGULATORY AGENCY CORRESPONDENCE

Property Information

Home / Address / Property Information

Property Information | Sales | History

Property Information

Help

PIN/Schedule
300408344

Owners
MANSANAREZ BONNIE MAE

AIN/Parcel ID
40-012-17-173

Property Address
16121 W 10TH AVE
GOLDEN, CO 80401

Address and Political
Address Information

Property Class
1212 Single Family Residential

Mailing Address
3203 VISTA DEL CAMINO
MARINA, CA 93933

Legal Description

Help

Subdivision
101650 BURDICK HEIGHTS EX SUR NO 1

Parcel Map
Map

Interactive Map
Aspin

Interactive Map
jMap

Block	Lot	Tract	Section	Township	Range	QSection	Land SQFT	Land Acres
	0001		01	04	70		15,987	0.367

CAUTION: The above legal description is incomplete and for internal purposes only. DO NOT USE THE ABOVE LEGAL DESCRIPTION FOR DEEDS and other legal conveyances.

Sale History

Help

Sale Date	Sale Amount	Deed Type	Doc/Instr#
6/19/1991	$0	Plat	91053181
6/20/1991	$62,000	Warranty Deed - Joint Tenancy	91055150
12/26/2001	$178,000	Warranty Deed - Joint Tenancy	F1396646
2/18/2003	$0	Quit Claim Deed - Joint Tenancy	F1688076

Sale Date	Sale Amount	Deed Type	Doc/Instr#
11/10/2005	$170,000	Warranty Deed - Joint Tenancy	2005119103
5/14/2014	$193,000	Warranty Deed	2014040336

Property Valuation

FIND COMPARABLE SALES

Help

****The 2023 payable 2024 property valuation shown for your property reflects an adjustment enacted by the Legislature to reduce your property taxes. Commercial properties were reduced in value by $30,000, and residential properties were reduced by $55,000. This reduction is in effect for one year only. For additional information regarding the legislative change click here.****

Mass Appraisal Valuation Explanation

Tax Year	Actual Land Value	Actual Imp Value	Actual Total Value	Assessed Land Value	Assessed Imp Value	Assessed Total Value	Notice of Valuation
2024 payable 2025	$252,297	$198,178	$450,475	$16,904	$13,278	$30,182	
2023 payable 2024	$252,297	$198,178	$450,475	$16,904	$13,278	$30,182	View Notice

Mill Levy Information

Help

Treasurer Tax Information

Tax Year	TAG	Authority	Mill Levy
2024 payable 2025	4573	COUNTY	TBD
		LAW ENFORCE AUTHORITY	TBD
		PLEASANT VIEW METRO DIST	TBD
		PLEASANT VIEW WATER & SAN DIST	TBD
		REGIONAL TRANSPORTATION DIST	TBD
		SCHOOL	TBD
		URBAN DRAINAGE&FLOOD C SO PLAT	TBD
		URBAN DRAINAGE&FLOOD CONT DIST	TBD
		Total Mill Levy	TBD

Tax Year	TAG	Authority	Mill Levy
2023 payable 2024	4573	COUNTY	26.9780
		LAW ENFORCE AUTHORITY	2.5390
		PLEASANT VIEW METRO DIST	14.0000
		PLEASANT VIEW WATER & SAN DIST	0.5520
		REGIONAL TRANSPORTATION DIST	0.0000
		SCHOOL	44.5260
		URBAN DRAINAGE&FLOOD C SO PLAT	0.1000
		URBAN DRAINAGE&FLOOD CONT DIST	0.9000
		Total Mill Levy	89.5950

Property Inventory

Help

Neighborhood
6103 EAST OLD GOLDEN RD/PLEASANT VIEW

Market Area
6 ResMA: Golden Area

Land

Help

Land Use	State Tax Class	Size	Unit Type	Land Contributor	Contributor Category
Residential	1112	0.367	Acre	Location Factor 1	Location Factor Adjustments
				Retail influence	External Forces

Improvements

Help

	Impr#	Property Type	Design	Construction Class	Quality	Year Built	Adj Year	Remd Year	Cmp%	Gross Area	State Tax Class
Select	1-1	201 Single Family	010 1 Story/Ranch	Frame	Average	1955	1959	2004	100%	1,464	1212

Impr#	Sub-Areas	Area-SQFT
1-1	Covered Porch	44
1-1	First Floor	1464

Impr#	Structural Elements by Unit	# Units
1-1	3/4 Bath (3 fixture)	1
1-1	Bedroom (Above Grade)	3
1-1	Full Bath+K+L	1
1-1	Nbr of Dwelling Units	1

Impr#	Structural Elements by SQFT	Description	Area-SQFT
1-1	HVAC Systems	Forced Air Unit	1,464
1-1	Interior Finish Type	Remodeled Area	600

©2024 Assessor Property Records Search – Jefferson County, CO

23-134382 OLDOW

TRI-COUNTY DISTRICT HEALTH DEPARTMENT

858A

Owner or Sponsor I. R. Huffman Phone _____

Address of Site 16121 W 10th Mailing Address _____

General Information

1. Living Units 1
2. Bedrooms 3
3. Baths (3pc.) 1
4. Basement drain no
5. Automatic laundry no
6. Garbage disposal yes
7. Automatic laundry yes
8. Other
9. Soil type heavy
10. Percolation test
11. Ground slope
12. Water supply:
    Municipal
    Private existing

Septic Tank

1. Liquid capacity 900 gallons
2. Dimensions W L or di D.
3. Material concrete
4. Type inlet Tee Outlet Tee

Secondary Treatment

Field ___ Bed ___ (Well ___ di. ___ D.)

1. Number of lines 2 Distribution box
2. Trench (width) 10' (length) 78 (depth) 2-3'
3. Depth of filter material 6-8
4. Gravel size washed 1/4" or larger
5. Type of tile 4 x 12
6. Remarks:

This system will be constructed in accordance with the above specifications and regulations governing sewage systems within the Tri-County District.

APPLICANT Ivan R Huffman

The plans and specifications as shown are approved.

SANITARIAN Don Turk Date 6-21-55

PLOT PLAN:

300' of 24" trench
240' of 30" trench
or
200' of 36" trench.

The above system inspected and found to comply with the plan and description.

Date _____ SANITARIAN _____

S#7 5/53

APPENDIX 4

QUALIFICATIONS

KEN FELDMAN

Lyons, CO ♦ 303.823.0132 ♦ kfeldman916@gmail.com ♦ LinkedIn

Dual-Scope Commercial Property Assessor

Dedicated, mission-focused and energetic program and project leader with an entrepreneurial spirit and diverse experience advancing key initiatives in the environmental and property investment settings. Seasoned in building and growing client pipelines that enable business expansion and revenue growth and effectively leading cross-functional teams in advancing key initiatives. Effective problem-solver and innovative collaborator with excellent analytical, organization, and problem-solving skills.

Areas of expertise:

Agency (Fannie Mae/Freddie Mac) Scope Assessments ♦ Radon Measurement and Mitigation
Project Management ♦ Client Relationship Engagement ♦ Business Development and Retention
Conservation Management ♦ Operational Innovation and Efficiency ♦ Creative Solutions Development ♦ People Development ♦ Budget Planning, ♦ Revenue Growth ♦ Stakeholder Engagement ♦ Business Analysis

PROFESSIONAL EXPERIENCE

NV5 (Formerly Bock & Clark / The Orin Group) 2008 – 2023

Director of Lender Services / Environmental and Property Condition Analyst

Advance numerous concurrent field initiatives across both environmental analysis and property analysis settings. Identify environmental and natural hazards for commercial real estate initiatives, including conducting comprehensive on-site analysis of site developments, building components, mechanical systems, accessibility, code compliance, and more. Responsible for generating $200K+ in annual sales while managing a pipeline of additional corporate projects.

- Build sound relationships with a broad range of stakeholders, including state environmental agencies.
- Play a key role in continuously enhancing the company's reputation, thereby enabling it to receive 99% of its business via client referrals.
- Research, review, and interpret historical maps and aerial photograph, ownership, usage, permit, and regulatory documentation, conduct interviews, and inspect buildings and properties to determine and correct repair needs.
- Direct consultant input initiatives that result in the updating of lending agency and ASTM guidelines by networking throughout the industry to gain key support for changes and updates.
- Successfully completed 1,000+ assessments nationwide during tenure thus far that have contributed to high-level environmental risk planning and repair remediation plan development while also yielding cost savings.
- Negotiate and renegotiate budgets, plans, closings, and finance securement efforts.
- Mentor individual staff in learning new skills and advancing their careers, thereby retaining top industry talent.

JACQUES WHITFORD 2005 – 2008

Director of Lender Services

Recruited to oversee the lender services division that was formerly Aaron and Wright. Grew the newly-created vision from the ground up and ultimately tripled its commercial lending revenue stream in the US. Established, implemented, led, evaluated, and continuously improved team and operational processes, procedures, and best practices.

- Successfully pitched and migrated six lender services staff, vendors, and all operations to a Canadian firm seeking to expand its US real estate.
- Leveraged long-term client relationships to transition the current client portfolio to the new company, retaining 100% of the client base.
- Conducted due diligence to feed other business work through the existing client portfolio and increase revenue.
- Facilitated buyer and lender environmental and engineering due diligence for a portfolio of 222 hotels nationwide under a tight timeline by leading 100+ in-house staff and vendors, guiding end-to-end project management elements, directing numerous scopes of work, and developing an innovative proprietary solution.

303.823.0122 ♦ ktggdogz@gmail.com

- Played a key role on an industry-wide group that created a comprehensive and interactive training offering for environmental and engineering assessments.

AARON & WRIGHT 1997 – 2005

Director of Operations

Led, developed, and mentored talented operations teams of 15-60 people. Developed, implemented, and improved client engagement strategies that enabled a continuous pipeline of revenue during fluctuating real estate cycles.

- Developed and executed streamlined operational procedures, hiring and field training guides, research procedures, report templates, and other critical operational support elements to drive efficiency.
- Recognized for improving consistency and accuracy, staff productivity, and employee satisfaction while simultaneously increasing individual and corporate project volume and profits.
- Co-led a relocation to Colorado that realized an additional $10M+ in annual sales.
- Consistently exceeded client expectations by understanding and delivering on the unique needs of each client.
- Maintained client loyalty during periods of company mergers and economic downturns.

Additional Experience:

Technical Reviewer, Land America | **Environmental Scientist**, Terra-Mar & Maxim Engineers

VOLUNTEER EXPERIENCE

LYONS PREPARED, Lyons, CO 2013 – Present

Steering Committee Member

Support neighborhood emergency preparedness by strengthening cross-community communications, developing training and emergency procedures, promoting mitigation efforts and building relationships with residents, emergency responders, and others.

LONGMONT DAM ROAD, Lyons, CO 2013 – Present

Neighborhood Representative and Stakeholder

Provided critical home and property protection support to prevent further damage following floods and wildfires

- Gained media buy-in that enabled area news coverage and publicizing, coordinated initial stabilization efforts by securing an excavation company to alleviate imminent erosion threat, and recruited and led volunteer teams in bank stabilization and clean-up efforts.
- Secured a NRCS grant for a multi-phase riverbank stabilization and water quality protection project to protect the neighborhood against future flood threats.

EDUCATION AND CERTIFICATIONS

Bachelor of Science in Geology | University of Illinois
Registered Professional Geologist | State of Texas (Active)
Radon Certification | National Radon Proficiency Program, Kansas State University (Active)
Radon License | Colorado Office of Radon Professionals (Active)

PROFESSIONAL AFFILIATIONS

Member | American Association of Petroleum Geologists
Member | Association of Environmental & Engineering Geologists
Member | Geological Society of America
Member | American Association of Radon Scientists and Technologists

CERTIFICATE OF LIABILITY INSURANCE

DATE (MM/DD/YYYY): 4/16/2024

THIS CERTIFICATE IS ISSUED AS A MATTER OF INFORMATION ONLY AND CONFERS NO RIGHTS UPON THE CERTIFICATE HOLDER. THIS CERTIFICATE DOES NOT AFFIRMATIVELY OR NEGATIVELY AMEND, EXTEND OR ALTER THE COVERAGE AFFORDED BY THE POLICIES BELOW. THIS CERTIFICATE OF INSURANCE DOES NOT CONSTITUTE A CONTRACT BETWEEN THE ISSUING INSURER(S), AUTHORIZED REPRESENTATIVE OR PRODUCER, AND THE CERTIFICATE HOLDER.

IMPORTANT: If the certificate holder is an ADDITIONAL INSURED, the policy(ies) must be endorsed. If SUBROGATION IS WAIVED, subject to the terms and conditions of the policy, certain policies may require an endorsement. A statement on this certificate does not confer rights to the certificate holder in lieu of such endorsement(s).

PRODUCER
AssuredPartners Colorado
4582 S. Ulster St., Suite 600
Denver, CO 80237

CONTACT NAME:
PHONE (A/C, No, Ext): 303-863-7788 **FAX (A/C, No):** 303-861-7502
E-MAIL ADDRESS: APCOI@assuredpartners.com

INSURER(S) AFFORDING COVERAGE	NAIC #
INSURER A : Capitol Specialty Ins Corp	10328
INSURER B :	
INSURER C :	
INSURER D :	
INSURER E :	
INSURER F :	

INSURED 916CONS-01
916 Consulting, LLC
55 Longmont Dam Road
Lyons, CO 80540

COVERAGES **CERTIFICATE NUMBER:** 1914393040 **REVISION NUMBER:**

THIS IS TO CERTIFY THAT THE POLICIES OF INSURANCE LISTED BELOW HAVE BEEN ISSUED TO THE INSURED NAMED ABOVE FOR THE POLICY PERIOD INDICATED. NOTWITHSTANDING ANY REQUIREMENT, TERM OR CONDITION OF ANY CONTRACT OR OTHER DOCUMENT WITH RESPECT TO WHICH THIS CERTIFICATE MAY BE ISSUED OR MAY PERTAIN, THE INSURANCE AFFORDED BY THE POLICIES DESCRIBED HEREIN IS SUBJECT TO ALL THE TERMS, EXCLUSIONS AND CONDITIONS OF SUCH POLICIES. LIMITS SHOWN MAY HAVE BEEN REDUCED BY PAID CLAIMS.

INSR LTR	TYPE OF INSURANCE	ADDL INSD	SUBR WVD	POLICY NUMBER	POLICY EFF (MM/DD/YYYY)	POLICY EXP (MM/DD/YYYY)	LIMITS	
A	X **COMMERCIAL GENERAL LIABILITY**	Y		EV20230254-02	4/14/2024	4/14/2025	EACH OCCURRENCE	$ 2,000,000
	CLAIMS-MADE X OCCUR						DAMAGE TO RENTED PREMISES (Ea occurrence)	$ 100,000
							MED EXP (Any one person)	$ 5,000
							PERSONAL & ADV INJURY	$ 2,000,000
	GEN'L AGGREGATE LIMIT APPLIES PER:						GENERAL AGGREGATE	$ 2,000,000
	X POLICY PRO-JECT LOC						PRODUCTS - COMP/OP AGG	$ 2,000,000
	OTHER:						Deductible	$ 2,500
A	**AUTOMOBILE LIABILITY**			EV20230254-02	4/14/2024	4/14/2025	COMBINED SINGLE LIMIT (Ea accident)	$
	ANY AUTO						BODILY INJURY (Per person)	$
	ALL OWNED AUTOS / SCHEDULED AUTOS						BODILY INJURY (Per accident)	$
	X HIRED AUTOS / X NON-OWNED AUTOS						PROPERTY DAMAGE (Per accident)	$
							Per Claim/Aggregate	$ $1m/$1m
	UMBRELLA LIAB OCCUR						EACH OCCURRENCE	$
	EXCESS LIAB CLAIMS-MADE						AGGREGATE	$
	DED RETENTION $							$
	WORKERS COMPENSATION AND EMPLOYERS' LIABILITY Y / N	N / A					PER STATUTE / OTH-ER	
	ANY PROPRIETOR/PARTNER/EXECUTIVE OFFICER/MEMBER EXCLUDED? **(Mandatory in NH)**						E.L. EACH ACCIDENT	$
	If yes, describe under DESCRIPTION OF OPERATIONS below						E.L. DISEASE - EA EMPLOYEE	$
							E.L. DISEASE - POLICY LIMIT	$
A	Contractors Pollution Liability			EV20230254-02	4/14/2024	4/14/2025	Each Incident/Agg	$2m/$2m
A	Professional Liability			EV20230254-02	4/14/2024	4/14/2025	Each Claim/Aggregate	$2m/$2m

DESCRIPTION OF OPERATIONS / LOCATIONS / VEHICLES (ACORD 101, Additional Remarks Schedule, may be attached if more space is required)

CERTIFICATE HOLDER

CANCELLATION

SHOULD ANY OF THE ABOVE DESCRIBED POLICIES BE CANCELLED BEFORE THE EXPIRATION DATE THEREOF, NOTICE WILL BE DELIVERED IN ACCORDANCE WITH THE POLICY PROVISIONS.

AUTHORIZED REPRESENTATIVE

© 1988-2014 ACORD CORPORATION. All rights reserved.

APPENDIX 5

PROPERTY QUESTIONNAIRE AND SUPPORTING DOCUMENTATION

Residential Questionnaire

Project Number: 24-090

GENERAL INFORMATION

Property Name: Single Family Residence

Address: 16121 W. 10th Avenue

City, State, Zip Golden, Jefferson County, Colorado 80401

PROPERTY INFORMATION

Property Size (in acres): _____ # of Buildings: _____

Building Square Footage: _____ Date(s) of Construction: _____

Please attach a Property/Site Plan to the returned Questionnaire

UTILITY AND SERVICE PROVIDERS

Electric _____ Storm Water _____

Gas _____ Solid Waste _____

Drinking Water _____ Sanitary Sewer _____

The questionnaire information was provided by:

Name: _____ Title: _____

Signature: _____ Phone Number: _____

Date: _____ Years of knowledge of the Property _____

PROJECT AND ENVIRONMENTAL INFORMATION

What is the reason for performing the Phase I Environmental Assessment?

What is the type of property transaction (sale, purchase, refi, etc.)?

Please answer the following questions "to the best of your knowledge".

PREVIOUS REPORTS, DOCUMENTS AND OWNERS

1. Are you aware if any previous Environmental Assessments have ever been performed on the subject property? If yes, are you aware of the recommendations made in the report and/or please provide a copy of the report?

Î- Yes Î - No

---

2. Do you have any other environmentally associated documents, such as compliance audits, environmental permits (such as an NPDES permit, boiler permit, wastewater permit), registrations (such as for an underground storage tank) or material safety data sheets? If yes, please provide a copy of the document(s)

Î- Yes Î - No

---

3. Can you provide contact information (name and phone number) of the previous owner of the property? If yes, please provide below.

Î- Yes Î - No

HISTORICAL & PRESENT USAGE/SITE CONDITIONS – SUBJECT AND ADJOINING PROPERTIES

1. Are you aware of the prior use of the subject property, i.e., any previous development, undeveloped? If so, please describe.

---

2. Has fill dirt ever been brought onto the subject property that originated from a contaminated site or from an unknown source?

Î- Yes Î - No

3. Are there currently or have there ever been any pits, ponds or lagoons on the subject property utilized in connection with waste treatment or waste disposal?

Î- Yes Î - No

4. Are you currently aware of or have there ever been any hazardous substances, petroleum products, tires, car or industrial batteries, pesticides or other chemicals or waste materials that have been dumped, buried or burned on the subject property?

Î- Yes Î - No

5. Are you aware of any current or former illegal drug labs on the subject property?

Î- Yes Î - No

6. Have any of the adjoining properties ever been used for industrial purposes? (Including but not limited to a gas station, dry cleaner, auto repair facility, landfill, waste treatment, printing facility etc)? If yes, please describe.

Ì- Yes Ì - No

7. Are any of the adjoining properties currently being used for industrial purposes? If yes, please describe.

Ì- Yes Ì - No

8. If the subject property is served by a private well or non-public water system, is there evidence or do you have prior knowledge that contaminants have been identified in the well or system that exceed guidelines applicable to the water system or that the well has been designated as contaminated by any government environmental/health agency? If an on-site well is present, please attach a copy of the most recent water quality testing report.

Ì- Yes Ì - No Ì- Not Applicable

AAI and REGULATORY QUESTIONS

In order to qualify for one of the Landowner Liability Protections offered by the Small Business Liability Relief and Brownfields Revitalization Act of 2001, you must provide the following information (if available). Failure to provide this information could result in a determination that "all appropriate inquiry" is not complete.

1. Are there any potential or pending lawsuits or administrative actions concerning a release or threatened release of hazardous substances or petroleum product involving the subject property or any facility located on the property?

Ì- Yes Ì - No

2. Did a search of land title records (or judicial records where appropriate), identify any environmental liens filed or recorded against the subject property under federal, tribal, state or local law or are you aware of any environmental liens encumbering or in connection with the subject property?

- Yes Ì - No

3. Are you aware of any areas of activity or use limitations (AULs) such as engineering controls, land use restrictions or institutional controls that are in place at the property and/or have been recorded or filed in a registry under federal, state or tribal law?

Ì- Yes Ì - No

4. Do you have any specialized knowledge or experience related to the property or nearby properties? For example, are you involved in the same line of business as the current or former occupants of the subject property or an adjoining property so that you would have specialized knowledge of the chemicals and processes used by this type of business?

Ì- Yes Ì - No

5. (Answer this question only if this is an acquisition) Does the purchase price being paid for this property reasonably reflect the fair market value of the property?

Ì- Yes Ì - No

If there is a difference, have you considered or determined whether the lower price is because contamination is known or believed to be present at the property?

Ì- Yes Ì - No

6. Are you aware of commonly known or reasonably ascertainable information about the subject property that would help the environmental professional to identify conditions indicative of releases or threatened releases? For example,

a. Do you know of any specific chemicals, hazardous substance or petroleum products that are present or were once present at the subject property?

Ì- Yes Ì - No

b. Do you know of any spills or other chemical releases that have taken place at the subject property?

Ó- Yes Ó - No

c. Do you know of any environmental clean ups that have occurred at the subject property?

Ó- Yes Ó - No

7. Based on your knowledge and experience related to the subject property, are any obvious indicators that point to the presence or likely presence of releases at the subject property?

Ó- Yes Ó - No

STORAGE TANKS AND DRAINS

1. Are there currently or are you aware if there have ever previously been any registered or unregistered storage tanks, aboveground or underground, located on the subject property? If so, please attach copies of documentation such as tank closure/removal reports, tank tightness tests or registration/regulatory information.

Ó- Yes Ó - No

2. Are there currently or are you aware if there have ever previously been any vent pipes, fill pipes, or access ways indicating a fill pipe protruding from the ground on the property or adjacent to any structure located on the subject property?

Ó- Yes Ó - No

3. Are there currently or are you aware if there have ever previously been any current evidence of leaks, spills, or staining by substances other than water, or foul odors, associated with any flooring, drains, walls, ceilings, or exposed grounds on the subject property?

Ó- Yes Ó - No

TRANSFORMERS AND HYDRAULIC EQUIPMENT

1. Are there are any transformers, capacitors, elevators, and/or hydraulic equipment on the subject property?

Ó- Yes Ó - No

2. If yes, are there any records indicating the presence or absence of PCBs in this equipment. If so, please attach copies of this documentation.

Ó- Yes Ó - No

3. Are the transformers owned by the subject property or by the local utility? If owned by the utility, please note the name of the utility.

ASBESTOS CONTAINING MATERIALS

1. Has the subject property ever been tested for the presence of asbestos containing materials (ACM)?

Ó- Yes Ó - No Ó- Do not Know

2. If yes, are you aware if asbestos containing materials were identified? If so, please note what asbestos containing materials were identified and their locations or please attach a copy of the test results?

Ó- Yes Ó - No Ó- Not Applicable

RADON

1. Has the subject property ever been tested for the presence of radon?
Ī- Yes Ī - No Ī- Do not Know

2. If yes, do you have the results of the testing? Please attach.
Ī- Yes Ī - No Ī- Not Applicable

3. Is there a Radon Mitigation System in place at the subject property?
Ī- Yes Ī - No Ī- Not Applicable

LEAD BASED PAINT

1. Has the subject property ever been tested for the presence of lead based paint (LBP)?
Ī- Yes Ī - No Ī- Do not Know

2. If yes, are you aware if lead based paint was identified? If so, please note where it was identified or please attach a copy of the test results?
Ī- Yes Ī - No Ī- Not Applicable

MOLD

1. Is there any evidence of mold and/or mildew on the subject property? If yes, please provide information as to the location, extent and the cause of the mold/mildew. Please note what actions are currently or have formerly been taken to address this concern.
Ī- Yes Ī - No

COMMENTS/ADDITIONAL INFORMATION (If necessary, please provide any additional relevant environmental information that has not been discussed above.)

APPENDIX 6

PROPERTY MAPS AND DRAWINGS

TOPOGRAPHIC MAP

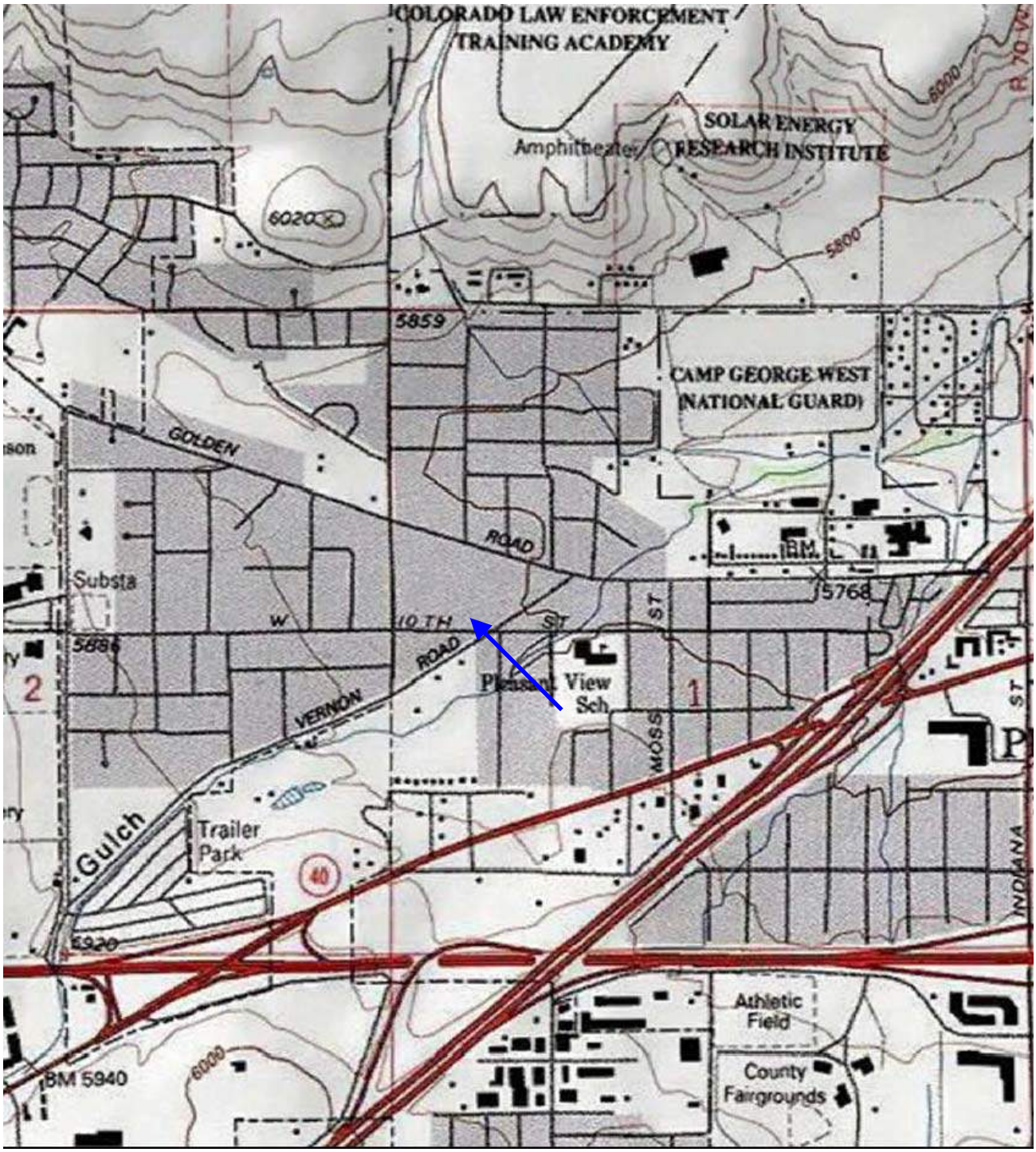

Mansanarez Residence	↑	U.S.G.S. Topographic Map, 7.5 Series	
16121 W. 10th Avenue		Morrison, Colorado Quadrangle	
Golden, Colorado	N	Date:	1965; revised 1994
916 Consulting Project No: 24-090		Scale:	1:24,000

PROPERTY LOCATION MAP

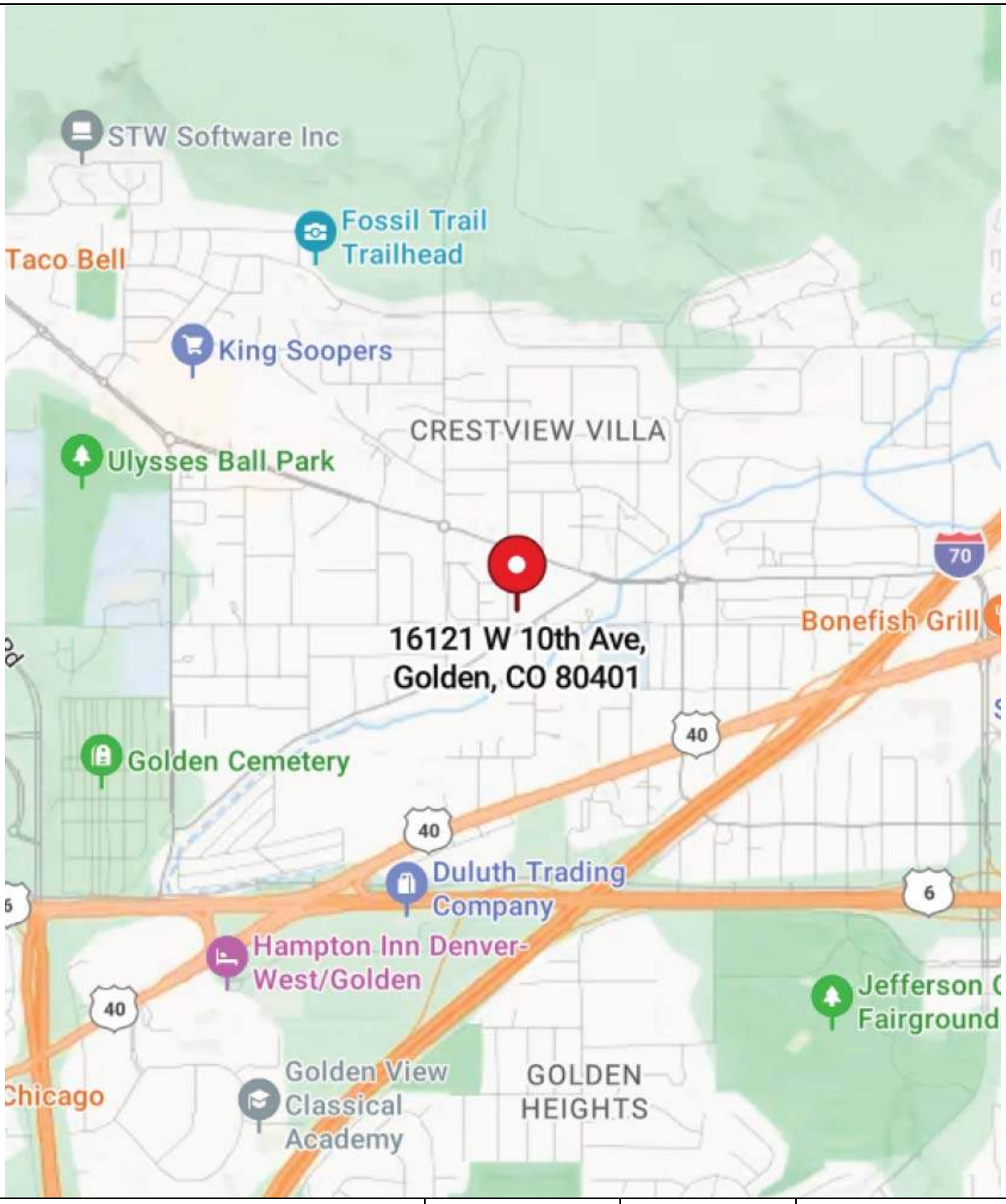

Mansanarez Residence	↑		
16121 W. 10th Avenue			
Golden, Colorado	N		
916 Consulting Project No: 24-090			

PROPERTY PLAN/AERIAL PHOTOGRAPH

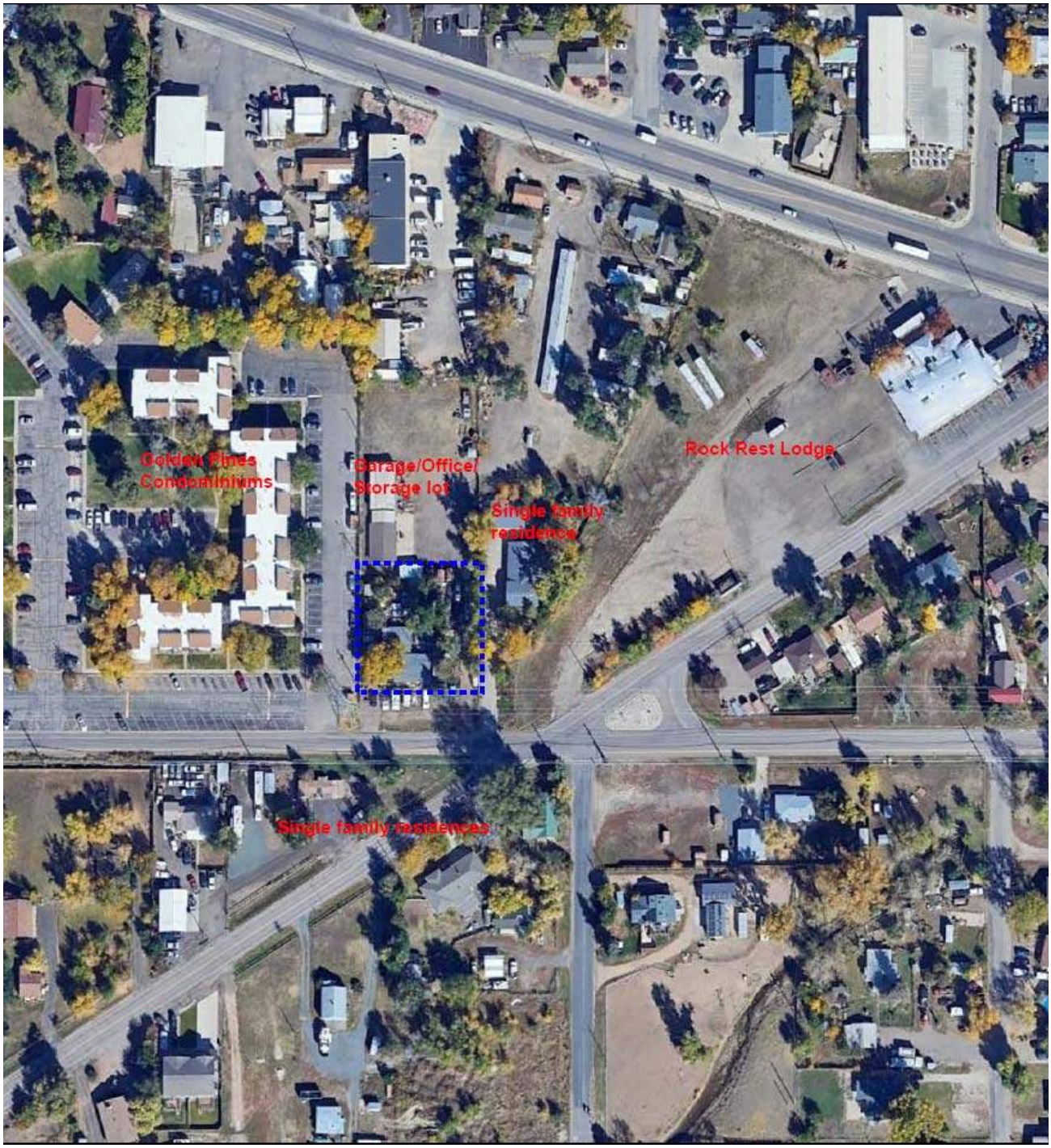

Mansanarez Residence	↑	Date:	2023
16121 W. 10th Avenue			
Golden, Colorado	N		
916 Consulting Project No: 24-090			

PARCEL MAP

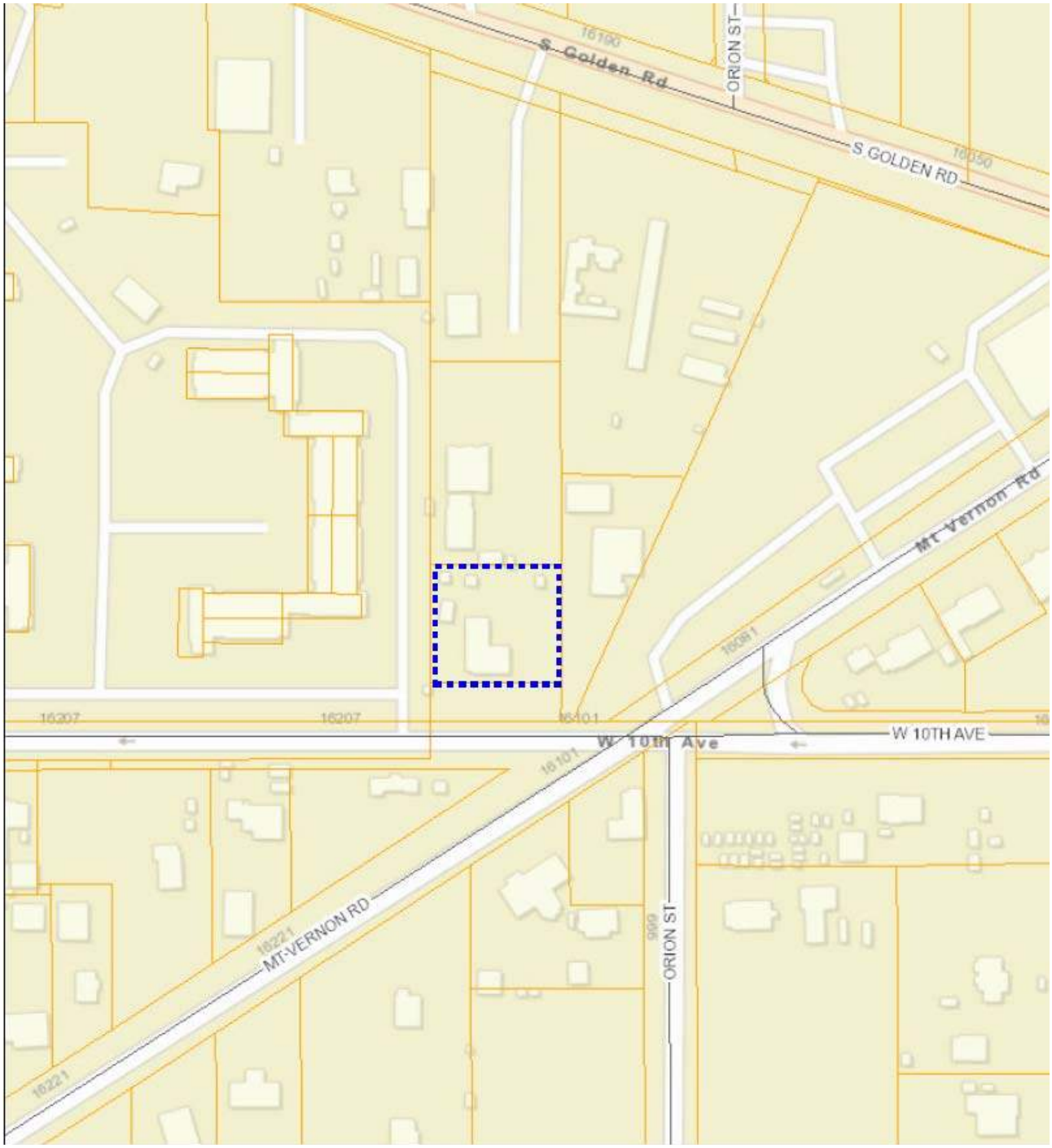

Mansanarez Residence	↑		
16121 W. 10th Avenue			
Golden, Colorado	N		
916 Consulting Project No: 24-090			

FLOOD ZONE MAP

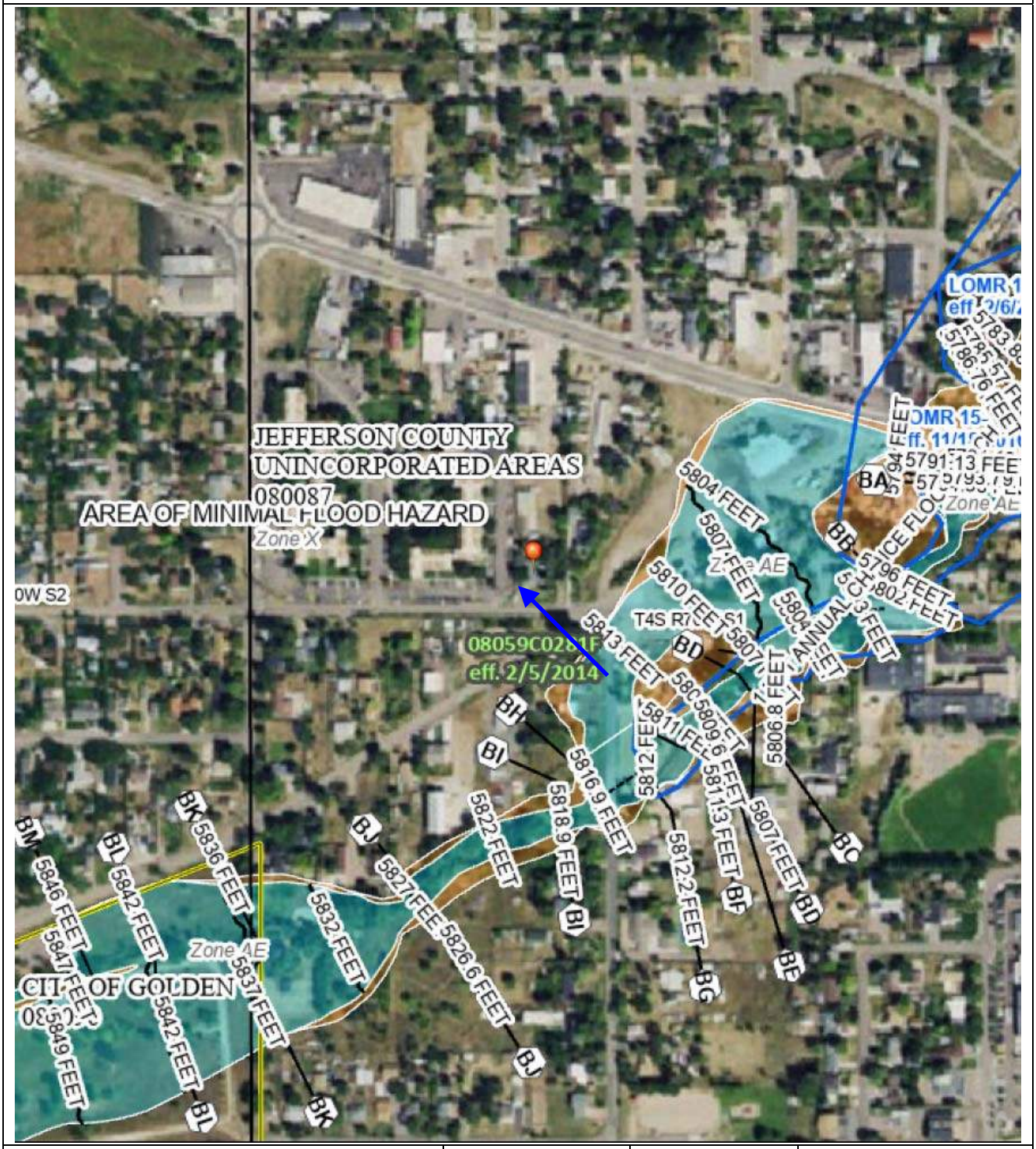

Mansanarez Residence	↑	Date:	February 5, 2014
16121 W. 10th Avenue		Panel Number:	08059C0281F
Golden, Colorado	N		
916 Consulting Project No: 24-090			

APPENDIX 7

HISTORICAL DOCUMENTATION

AERIAL PHOTOGRAPH

Mansanarez Residence	↑	Date:	1937
16121 W. 10th Avenue		Scale:	1”=500’
Golden, Colorado	N		
916 Consulting Project No: 24-090			

AERIAL PHOTOGRAPH

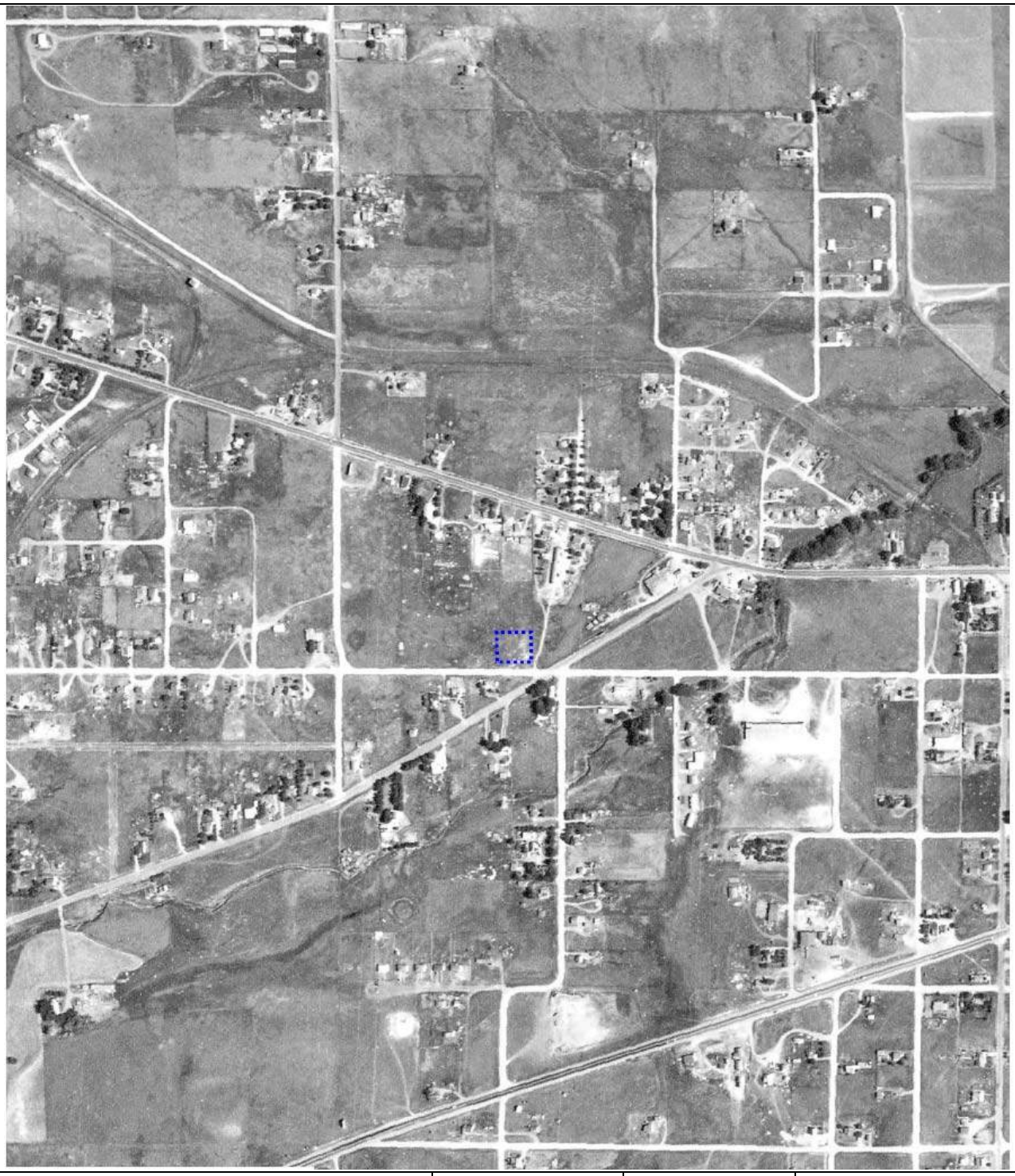

Mansanarez Residence	↑	Date:	1955
16121 W. 10th Avenue		Scale:	1”=500’
Golden, Colorado	N		
916 Consulting Project No: 24-090			

AERIAL PHOTOGRAPH

Mansanarez Residence	↑	Date:	1963
16121 W. 10th Avenue		Scale:	1”=500’
Golden, Colorado	N		
916 Consulting Project No: 24-090			

AERIAL PHOTOGRAPH

Mansanarez Residence	↑	Date:	1971
16121 W. 10th Avenue		Scale:	1”=500’
Golden, Colorado	N		
916 Consulting Project No: 24-090			

AERIAL PHOTOGRAPH

Mansanarez Residence	↑	Date:	1979
16121 W. 10th Avenue		Scale:	1”=500’
Golden, Colorado	N		
916 Consulting Project No: 24-090			

AERIAL PHOTOGRAPH

Mansanarez Residence	↑	Date:	1983
16121 W. 10th Avenue		Scale:	1”=500’
Golden, Colorado	N		
916 Consulting Project No: 24-090			

AERIAL PHOTOGRAPH

Mansanarez Residence	↑	Date:	1994
16121 W. 10th Avenue		Scale:	1”=500’
Golden, Colorado	N		
916 Consulting Project No: 24-090			

AERIAL PHOTOGRAPH

Mansanarez Residence	↑	Date:	1999
16121 W. 10th Avenue		Scale:	1”=500’
Golden, Colorado	N		
916 Consulting Project No: 24-090			

AERIAL PHOTOGRAPH

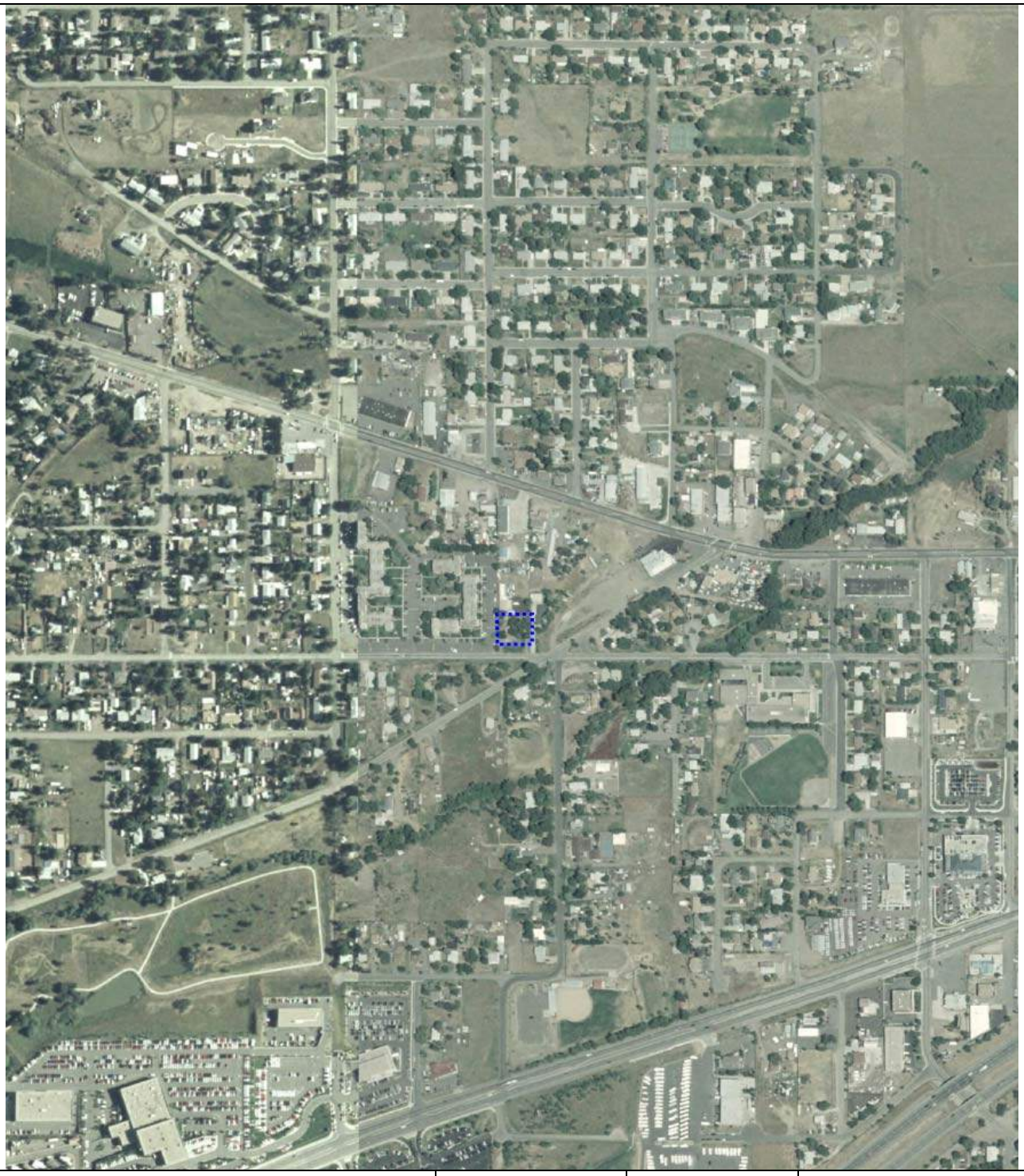

Mansanarez Residence	↑	Date:	2005
16121 W. 10th Avenue		Scale:	1”=500’
Golden, Colorado	N		
916 Consulting Project No: 24-090			

AERIAL PHOTOGRAPH

Mansanarez Residence	↑	Date:	2015
16121 W. 10th Avenue		Scale:	1”=500’
Golden, Colorado	N		
916 Consulting Project No: 24-090			

AERIAL PHOTOGRAPH

Mansanarez Residence	↑	Date:	2022
16121 W. 10th Avenue		Scale:	1”=165’
Golden, Colorado	N		
916 Consulting Project No: 24-090			

Residence

16121 W. 10th

Golden, CO 80401

Inquiry Number: 7813539.3

November 05, 2024

Certified Sanborn® Map Report

6 Armstrong Road, 4th floor
Shelton, CT 06484
Toll Free: 800.352.0050
www.edrnet.com

Certified Sanborn® Map Report

11/05/24

Site Name:	Client Name:
Residence	916 Consulting
16121 W. 10th	55 Longmont Dam Road
Golden, CO 80401	Lyons, CO 80540
EDR Inquiry # 7813539.3	Contact: Ken Feldman

The Sanborn Library has been searched by EDR and maps covering the target property location as provided by 916 Consulting were identified for the years listed below. The Sanborn Library is the largest, most complete collection of fire insurance maps. The collection includes maps from Sanborn, Bromley, Perris & Browne, Hopkins, Barlow, and others. Only Environmental Data Resources Inc. (EDR) is authorized to grant rights for commercial reproduction of maps by the Sanborn Library LLC, the copyright holder for the collection. Results can be authenticated by visiting www.edrnet.com/sanborn.

The Sanborn Library is continually enhanced with newly identified map archives. This report accesses all maps in the collection as of the day this report was generated.

Certified Sanborn Results:

Certification # EA85-472C-9C48

PO # NA

Project 24-090

UNMAPPED PROPERTY

This report certifies that the complete holdings of the Sanborn Library, LLC collection have been searched based on client supplied target property information, and fire insurance maps covering the target property were not found.

Sanborn® Library search results

Certification #: EA85-472C-9C48

The Sanborn Library includes more than 1.2 million fire insurance maps from Sanborn, Bromley, Perris & Browne, Hopkins, Barlow and others which track historical property usage in approximately 12,000 American cities and towns. Collections searched:

- ✔ Library of Congress
- ✔ University Publications of America
- ✔ EDR Private Collection

The Sanborn Library LLC Since 1866™

Limited Permission To Make Copies

916 Consulting (the client) is permitted to make up to FIVE photocopies of this Sanborn Map transmittal and each fire insurance map accompanying this report solely for the limited use of its customer. No one other than the client is authorized to make copies. Upon request made directly to an EDR Account Executive, the client may be permitted to make a limited number of additional photocopies. This permission is conditioned upon compliance by the client, its customer and their agents with EDR's copyright policy; a copy of which is available upon request.

Disclaimer - Copyright and Trademark Notice

This Report contains certain information obtained from a variety of public and other sources reasonably available to Environmental Data Resources, LLC. It cannot be concluded from this Report that coverage information for the target and surrounding properties does not exist from other sources. This Report is provided on an "AS IS", "AS AVAILABLE" basis. NO WARRANTY EXPRESS OR IMPLIED IS MADE WHATSOEVER IN CONNECTION WITH THIS REPORT. ENVIRONMENTAL DATA RESOURCES, LLC AND ITS SUBSIDIARIES, AFFILIATES AND THIRD PARTY SUPPLIERS DISCLAIM ALL WARRANTIES, OF ANY KIND OR NATURE, EXPRESS OR IMPLIED, ARISING OUT OF OR RELATED TO THIS REPORT OR ANY OF THE DATA AND INFORMATION PROVIDED IN THIS REPORT, INCLUDING WITHOUT LIMITATION, ANY WARRANTIES REGARDING ACCURACY, QUALITY, CORRECTNESS, COMPLETENESS, COMPREHENSIVENESS, SUITABILITY, MERCHANTABILITY, FITNESS FOR A PARTICULAR PURPOSE, TITLE, NON-INFRINGEMENT, MISAPPROPRIATION, OR OTHERWISE. ALL RISK IS ASSUMED BY THE USER. IN NO EVENT SHALL ENVIRONMENTAL DATA RESOURCES, LLC OR ITS SUBSIDIARIES, AFFILIATES OR THIRD PARTY SUPPLIERS BE LIABLE TO ANYONE FOR ANY DIRECT, INCIDENTAL, INDIRECT, SPECIAL, CONSEQUENTIAL OR OTHER DAMAGES OF ANY TYPE OR KIND (INCLUDING BUT NOT LIMITED TO LOSS OF PROFITS, LOSS OF USE, OR LOSS OF DATA), ARISING OUT OF OR IN ANY WAY CONNECTED WITH THIS REPORT OR ANY OF THE DATA AND INFORMATION PROVIDED IN THIS REPORT. Any analyses, estimates, ratings, environmental risk levels, or risk codes provided in this Report are provided for illustrative purposes only, and are not intended to provide, nor should they be interpreted as providing any facts regarding, or prediction or forecast of, any environmental risk for any property. Only an assessment performed by a qualified environmental professional can provide findings, opinions or conclusions regarding the environmental risk or conditions in, on or at any property.

Copyright 2024 by Environmental Data Resources, Inc. All rights reserved. Reproduction in any media or format, in whole or in part, of any report or map of Environmental Data Resources, Inc., or its affiliates, is prohibited without prior written permission.

EDR and its logos (including Sanborn and Sanborn Map) are trademarks of Environmental Data Resources, LLC or its affiliates. All other trademarks used herein are the property of their respective owners.

APPENDIX 8

ENVIRONMENTAL DATABASES

Residence
16121 W. 10th
Golden, CO 80401

Inquiry Number: 7813539.2s
November 05, 2024

The EDR Radius Map™ Report

6 Armstrong Road, 4th floor
Shelton, CT 06484
Toll Free: 800.352.0050
www.edrnet.com

FORM-LBD-DLU

TABLE OF CONTENTS

SECTION	PAGE
Executive Summary	ES1
Overview Map	2
Detail Map	3
Map Findings Summary	4
Map Findings	7
Orphan Summary	86
Government Records Searched/Data Currency Tracking	GR-1

GEOCHECK ADDENDUM

GeoCheck - Not Requested

Thank you for your business.
Please contact EDR at 1-800-352-0050
with any questions or comments.

Disclaimer - Copyright and Trademark Notice

The EDR FieldCheck® System enables EDR's customers to make certain online modifications to the maps and text contained in EDR Radius Map Reports. As a result, the maps and text contained in this Report may have been so modified. EDR has not taken any action to verify any such modifications.

This Report contains certain information obtained from a variety of public and other sources reasonably available to Environmental Data Resources, LLC. It cannot be concluded from this Report that coverage information for the target and surrounding properties does not exist from other sources. This Report is provided on an "AS IS", "AS AVAILABLE" basis. **NO WARRANTY EXPRESS OR IMPLIED IS MADE WHATSOEVER IN CONNECTION WITH THIS REPORT. ENVIRONMENTAL DATA RESOURCES, LLC AND ITS SUBSIDIARIES, AFFILIATES AND THIRD PARTY SUPPLIERS DISCLAIM ALL WARRANTIES, OF ANY KIND OR NATURE, EXPRESS OR IMPLIED, ARISING OUT OF OR RELATED TO THIS REPORT OR ANY OF THE DATA AND INFORMATION PROVIDED IN THIS REPORT, INCLUDING WITHOUT LIMITATION, ANY WARRANTIES REGARDING ACCURACY, QUALITY, CORRECTNESS, COMPLETENESS, COMPREHENSIVENESS, SUITABILITY, MERCHANTABILITY, FITNESS FOR A PARTICULAR PURPOSE, TITLE, NON-INFRINGEMENT, MISAPPROPRIATION, OR OTHERWISE. ALL RISK IS ASSUMED BY THE USER. IN NO EVENT SHALL ENVIRONMENTAL DATA RESOURCES, LLC OR ITS SUBSIDIARIES, AFFILIATES OR THIRD PARTY SUPPLIERS BE LIABLE TO ANYONE FOR ANY DIRECT, INCIDENTAL, INDIRECT, SPECIAL, CONSEQUENTIAL OR OTHER DAMAGES OF ANY TYPE OR KIND (INCLUDING BUT NOT LIMITED TO LOSS OF PROFITS, LOSS OF USE, OR LOSS OF DATA) INFORMATION PROVIDED IN THIS REPORT.** Any analyses, estimates, ratings, environmental risk levels, or risk codes provided in this Report are provided for illustrative purposes only, and are not intended to provide, nor should they be interpreted as providing any facts regarding, or prediction or forecast of, any environmental risk for any property. Only an assessment performed by a qualified environmental professional can provide findings, opinions or conclusions regarding the environmental risk or conditions in, on or at any property.

Copyright 2024 by Environmental Data Resources, LLC. All rights reserved. Reproduction in any media or format, in whole or in part, of any report or map of Environmental Data Resources, LLC, or its affiliates, is prohibited without prior written permission.

EDR and its logos (including Sanborn and Sanborn Map) are trademarks of Environmental Data Resources, LLC or its affiliates. All other trademarks used herein are the property of their respective owners.

EXECUTIVE SUMMARY

A search of the environmental records was conducted by Environmental Data Resources, Inc. (EDR). 916 CONSULTING used the EDR FieldCheck System to review and/or revise the results of this search, based on independent data verification by 916 CONSULTING. The report was designed to assist parties seeking to meet the search requirements of EPA's Standards and Practices for All Appropriate Inquiries (40 CFR Part 312), the ASTM Standard Practice for Environmental Site Assessments (E1527 - 21) or custom requirements developed for the evaluation of environmental risk associated with a parcel of real estate.

TARGET PROPERTY INFORMATION

ADDRESS

16121 W. 10TH
GOLDEN, CO 80401

COORDINATES

Latitude (North):	39.7330360 - 39˚ 43' 58.92''
Longitude (West):	105.1817800 - 105˚ 10' 54.40''
Universal Tranverse Mercator:	Zone 13
UTM X (Meters):	484422.7
UTM Y (Meters):	4397934.0
Elevation:	5814 ft. above sea level

USGS TOPOGRAPHIC MAP ASSOCIATED WITH TARGET PROPERTY

Target Property Map:	50012080 MORRISON, CO
Version Date:	2022

AERIAL PHOTOGRAPHY IN THIS REPORT

Portions of Photo from:	20190913, 20190919
Source:	USDA

MAPPED SITES SUMMARY

Target Property Address:
16121 W. 10TH
GOLDEN, CO 80401

Click on Map ID to see full detail.

MAP ID	SITE NAME	ADDRESS	DATABASE ACRONYMS	RELATIVE ELEVATION	DIST (ft. & mi.) DIRECTION
A1	MOUNTAIN VIEW TRAILE	16100 S GOLDEN RD	UST, LUST, LTANKS	Lower	368, 0.070, NNE
A2	MOUNTAIN VIEW VILLAG	16100 S GOLDEN RD	ICIS, ECHO, FINDS	Lower	368, 0.070, NNE
3	EISINGER SMITH, INC.	1055 ORCHARD ST. #B	FINDS	Lower	806, 0.153, NE
B4	EVERGREEN DISPOSAL	GOLDEN ROAD & NOBEL	RCRA NonGen / NLR	Lower	840, 0.159, ENE
B5	JE-MERIT CONSTRUCTIO	15967 OLD GOLDEN RD	RCRA NonGen / NLR, ECHO, FINDS	Lower	873, 0.165, ENE
C6	GOLDEN PROPERTIES	15970 S OLD GOLDEN R	UST	Lower	880, 0.167, ENE
C7	MAKRIS PROPERTY	15970 S OLD GOLDEN R	LTANKS	Lower	880, 0.167, ENE
B8	MOUNTAIN SIDE GEAR R	15985 S. GOLDEN ROAD	FINDS	Lower	883, 0.167, ENE
B9	STEVE'S CARBURATOR (	15985 SOUTH GOLDEN R	FINDS	Lower	883, 0.167, ENE
10	UA RENTAL INC	16350 S GOLDEN RD	AST	Higher	911, 0.173, NW
C11	EVERGREEN DISPOSAL	GOLDEN ROAD & NOBEL	ECHO, FINDS	Lower	946, 0.179, ENE
D12	7-ELEVEN #25581	16400 S GOLDEN RD	UST, LUST, LTANKS	Higher	1174, 0.222, NW
D13	7-ELEVEN # 25581	16400 SOUTH GOLDEN R	FINDS, ECHO	Higher	1174, 0.222, NW
14	FORMER GAS STATION	16415 S GOLDEN RD	LTANKS	Higher	1296, 0.245, NW
15	JEFFERSON COUNTY MAI	15725 S OLD GOLDEN R	UST, LUST, LTANKS	Lower	1516, 0.287, ENE
16	PLANET HONDA	15601 W COLFAX	RCRA-VSQG, US AIRS, UST, AIRS, LUST, SHWF, LTANKS	Higher	1729, 0.327, SE
E17	HI PERFORMANCE CAR W	15610 S GOLDEN RD	LTANKS	Lower	1852, 0.351, East
18	SERVICE STATION	16650 S GOLDEN RD	LTANKS	Higher	1854, 0.351, NW
19	PLEASANT VIEW PCE	NEAR 10TH AND LOVELA	SEMS-ARCHIVE	Lower	1916, 0.363, East
E20	CSP - GOLDEN #49611	1096 MCINTYRE ST	UST, LTANKS	Lower	1987, 0.376, East
E21	CSP - CAMP GEORGE WE	1096 MCINTYRE ST	LUST	Lower	1987, 0.376, East
22	880-890 MCINTYRE ST	880-890 MCINTYRE ST	VCP	Higher	2187, 0.414, ESE
23	BAJWA BROTHERS LLC	15495 W COLFAX AVE	UST, LUST, LTANKS	Lower	2513, 0.476, ESE
24	U-HAUL MOVING & STOR	15500 W COLFAX AVE	UST, LUST, LTANKS, AST	Higher	2537, 0.480, ESE
25	PLEASANT VIEW PCE	10TH AVENUE AND LOVE	BROWNFIELDS	Lower	2603, 0.493, East
26	SOUTH TABLE MOUNTAIN	16173 DENVER WEST PK	SPILLS, LTANKS	Higher	2632, 0.498, North
27	MOUNTAIN CHEM INC	16035 W 4TH AVE	CORRACTS, RCRA-TSDF, SEMS-ARCHIVE, ECHO, RAATS,...	Higher	3930, 0.744, South
28	STEVINSON TOYOTA WES	15000 W. COLFAX AVE.	ECHO, RCRA NonGen / NLR, CORRACTS, FINDS, AST	Lower	4042, 0.766, East
29	AWESOME AUTOMOTIVE	17285 S GOLDEN RD	CORRACTS, FINDS, ECHO, RCRA NonGen / NLR	Higher	4535, 0.859, WNW

EXECUTIVE SUMMARY

TARGET PROPERTY SEARCH RESULTS

The target property was not listed in any of the databases searched by EDR.

DATABASES WITH NO MAPPED SITES

No sites were identified in following databases.

STANDARD ENVIRONMENTAL RECORDS

Lists of Federal NPL (Superfund) sites

NPL ..... National Priority List
Proposed NPL ..... Proposed National Priority List Sites

Lists of Federal Delisted NPL sites

Delisted NPL ..... National Priority List Deletions

Lists of Federal sites subject to CERCLA removals and CERCLA orders

SEMS ..... Superfund Enterprise Management System

Lists of Federal RCRA TSD facilities

RCRA-TSDF ..... RCRA - Treatment, Storage and Disposal

Lists of Federal RCRA generators

RCRA-LQG ..... RCRA - Large Quantity Generators
RCRA-SQG ..... RCRA - Small Quantity Generators
RCRA-VSQG ..... RCRA - Very Small Quantity Generators (Formerly Conditionally Exempt Small Quantity Generators)

Federal institutional controls / engineering controls registries

US ENG CONTROLS ..... Engineering Controls Sites List
US INST CONTROLS ..... Institutional Controls Sites List

Federal ERNS list

ERNS ..... Emergency Response Notification System

Lists of state- and tribal hazardous waste facilities

SHWS ..... This state does not maintain a SHWS list. See the Federal CERCLIS list and Federal NPL list.

Lists of state and tribal landfills and solid waste disposal facilities

SWF/LF ..... Solid Waste Sites & Facilities

Lists of state and tribal leaking storage tanks

LAST ..... Leaking Aboveground Storage Tank Listing
INDIAN LUST ..... Leaking Underground Storage Tanks on Indian Land

Lists of state and tribal registered storage tanks

INDIAN UST ..... Underground Storage Tanks on Indian Land

State and tribal institutional control / engineering control registries

AUL ..... Environmental Covenants and Environmental Use Restrictions List

Lists of state and tribal voluntary cleanup sites

INDIAN VCP ..... Voluntary Cleanup Priority Listing

ADDITIONAL ENVIRONMENTAL RECORDS

Local Brownfield lists

US BROWNFIELDS ..... A Listing of Brownfields Sites

Local Lists of Landfill / Solid Waste Disposal Sites

HIST LF ..... Historical Landfill List
INDIAN ODI ..... Report on the Status of Open Dumps on Indian Lands
IHS OPEN DUMPS ..... Open Dumps on Indian Land
DENVER CO HIST FILL ..... Denver City & County Historic Fill Areas

Local Lists of Hazardous waste / Contaminated Sites

CDL ..... Meth Lab Locations
US CDL ..... National Clandestine Laboratory Register

Records of Emergency Release Reports

SPILLS ..... Spills Database

Other Ascertainable Records

TSCA ..... Toxic Substances Control Act
TRIS ..... Toxic Chemical Release Inventory System
ROD ..... Records Of Decision
RAATS ..... RCRA Administrative Action Tracking System
PADS ..... PCB Activity Database System
INDIAN RESERV ..... Indian Reservations
FUSRAP ..... Formerly Utilized Sites Remedial Action Program
US AIRS ..... Aerometric Information Retrieval System Facility Subsystem
MINES MRDS ..... Mineral Resources Data System
ABANDONED MINES ..... Abandoned Mines
DOCKET HWC ..... Hazardous Waste Compliance Docket Listing
UXO ..... Unexploded Ordnance Sites

EXECUTIVE SUMMARY

ECHO	Enforcement & Compliance History Information
FUELS PROGRAM	EPA Fuels Program Registered Listing
PFAS NPL	Superfund Sites with PFAS Detections Information
PFAS FEDERAL SITES	Federal Sites PFAS Information
PFAS TRIS	List of PFAS Added to the TRI
PFAS TSCA	PFAS Manufacture and Imports Information
PFAS RCRA MANIFEST	PFAS Transfers Identified In the RCRA Database Listing
PFAS ATSDR	PFAS Contamination Site Location Listing
PFAS WQP	Ambient Environmental Sampling for PFAS
PFAS PROJECT	NORTHEASTERN UNIVERSITY PFAS PROJECT
PFAS NPDES	Clean Water Act Discharge Monitoring Information
PFAS ECHO	Facilities in Industries that May Be Handling PFAS Listing
PFAS ECHO FIRE TRAIN	Facilities in Industries that May Be Handling PFAS Listing
PFAS PT 139 AIRPORT	All Certified Part 139 Airports PFAS Information Listing
AQUEOUS FOAM NRC	Aqueous Foam Related Incidents Listing
BIOSOLIDS	ICIS-NPDES Biosolids Facility Data
E MANIFEST	Hazardous Waste Electronic Manifest System
PFAS	PFAS Information Listing
AQUEOUS FOAM	Class B Firefighting Foam Contaminating PFAS Listing
AIRS	Permitted Facility & Emissions Listing
METHANE SITE	Methane Site Investigations - Jefferson County 1980
Methane Investig	Methane Gas & Swamp Findings
DRYCLEANERS	Drycleaner Facilities
LEAD	LEAD
MINES	Permitted Mines Listing
UIC	Underground Injection Control

EDR RECOVERED GOVERNMENT ARCHIVES

Exclusive Recovered Govt. Archives

RGA LF	Recovered Government Archive Solid Waste Facilities List
RGA LUST	Recovered Government Archive Leaking Underground Storage Tank

SURROUNDING SITES: SEARCH RESULTS

Surrounding sites were identified in the following databases.

Elevations have been determined from the USGS Digital Elevation Model and should be evaluated on a relative (not an absolute) basis. Relative elevation information between sites of close proximity should be field verified. Sites with an elevation equal to or higher than the target property have been differentiated below from sites with an elevation lower than the target property.
Page numbers and map identification numbers refer to the EDR Radius Map report where detailed data on individual sites can be reviewed.

Sites listed in ***bold italics*** are in multiple databases.

Unmappable (orphan) sites are not considered in the foregoing analysis.

EXECUTIVE SUMMARY

STANDARD ENVIRONMENTAL RECORDS

Lists of Federal CERCLA sites with NFRAP

SEMS-ARCHIVE: SEMS-ARCHIVE (Superfund Enterprise Management System Archive) tracks sites that have no further interest under the Federal Superfund Program based on available information. The list was formerly known as the CERCLIS-NFRAP, renamed to SEMS ARCHIVE by the EPA in 2015. EPA may perform a minimal level of assessment work at a site while it is archived if site conditions change and/or new information becomes available. Archived sites have been removed and archived from the inventory of SEMS sites. Archived status indicates that, to the best of EPA's knowledge, assessment at a site has been completed and that EPA has determined no further steps will be taken to list the site on the National Priorities List (NPL), unless information indicates this decision was not appropriate or other considerations require a recommendation for listing at a later time. The decision does not necessarily mean that there is no hazard associated with a given site; it only means that. based upon available information, the location is not judged to be potential NPL site.

An online review and analysis by 916 CONSULTING of the SEMS-ARCHIVE list, as provided by EDR, has revealed that there is 1 SEMS-ARCHIVE site within approximately 0.5 miles of the target property.

Lower Elevation	Address	Direction / Distance	Map ID	Page
PLEASANT VIEW PCE EPA Id: COSFN0801690: Site ID: 0801690:	NEAR 10TH AND LOVELA	E 1/4 - 1/2 (0.363 mi.)	19	31

Lists of Federal RCRA facilities undergoing Corrective Action

CORRACTS: CORRACTS is a list of handlers with RCRA Corrective Action Activity. This report shows which nationally-defined corrective action core events have occurred for every handler that has had corrective action activity.

An online review and analysis by 916 CONSULTING of the CORRACTS list, as provided by EDR, has revealed that there are 3 CORRACTS sites within approximately 1 mile of the target property.

Equal/Higher Elevation	Address	Direction / Distance	Map ID	Page
MOUNTAIN CHEM INC EPA ID:: COD040713562:	***16035 W 4TH AVE***	***S 1/2 - 1 (0.744 mi.)***	***27***	***45***
AWESOME AUTOMOTIVE EPA ID:: COR000010710:	***17285 S GOLDEN RD***	***WNW 1/2 - 1 (0.859 mi.)***	***29***	***81***

Lower Elevation	Address	Direction / Distance	Map ID	Page
STEVINSON TOYOTA WES EPA ID:: COD059257311:	***15000 W. COLFAX AVE.***	***E 1/2 - 1 (0.766 mi.)***	***28***	***72***

EXECUTIVE SUMMARY

Lists of state and tribal landfills and solid waste disposal facilities

SHWF: A listing from the Solid Waste Information System, which is used to help administer the various programs of our solid waste and materials management program. It includes a wide variety of types of facilities and sites, and includes information obtained over several decades and numerous legacy data systems.

An online review and analysis by 916 CONSULTING of the SHWF list, as provided by EDR, has revealed that there is 1 SHWF site within approximately 0.5 miles of the target property.

Equal/Higher Elevation	Address	Direction / Distance	Map ID	Page
PLANET HONDA	***15601 W COLFAX***	***SE 1/4 - 1/2 (0.327 mi.)***	***16***	***24***

Lists of state and tribal leaking storage tanks

LTANKS: Active and Closed OPS Petroleum Release Events in Colorado. Includes the OPS Open Event locations, but also shows locations of closed events (releases that have been issued a No Further Action determination).

An online review and analysis by 916 CONSULTING of the LTANKS list, as provided by EDR, has revealed that there are 12 LTANKS sites within approximately 0.5 miles of the target property.

Equal/Higher Elevation	Address	Direction / Distance	Map ID	Page
7-ELEVEN #25581	***16400 S GOLDEN RD***	***NW 1/8 - 1/4 (0.222 mi.)***	***D12***	***18***
FORMER GAS STATION	16415 S GOLDEN RD	NW 1/8 - 1/4 (0.245 mi.)	14	21
PLANET HONDA	***15601 W COLFAX***	***SE 1/4 - 1/2 (0.327 mi.)***	***16***	***24***
SERVICE STATION	16650 S GOLDEN RD	NW 1/4 - 1/2 (0.351 mi.)	18	30
U-HAUL MOVING & STOR	***15500 W COLFAX AVE***	***ESE 1/4 - 1/2 (0.480 mi.)***	***24***	***41***
SOUTH TABLE MOUNTAIN	***16173 DENVER WEST PK***	***N 1/4 - 1/2 (0.498 mi.)***	***26***	***44***

Lower Elevation	Address	Direction / Distance	Map ID	Page
MOUNTAIN VIEW TRAILE	***16100 S GOLDEN RD***	***NNE 0 - 1/8 (0.070 mi.)***	***A1***	***7***
MAKRIS PROPERTY	15970 S OLD GOLDEN R	ENE 1/8 - 1/4 (0.167 mi.)	C7	15
JEFFERSON COUNTY MAI	***15725 S OLD GOLDEN R***	***ENE 1/4 - 1/2 (0.287 mi.)***	***15***	***22***
HI PERFORMANCE CAR W	15610 S GOLDEN RD	E 1/4 - 1/2 (0.351 mi.)	E17	30
CSP - GOLDEN #49611	***1096 MCINTYRE ST***	***E 1/4 - 1/2 (0.376 mi.)***	***E20***	***33***
BAJWA BROTHERS LLC	***15495 W COLFAX AVE***	***ESE 1/4 - 1/2 (0.476 mi.)***	***23***	***35***

LUST: The Leaking Underground Storage Tank Incident Reports contain an inventory of reported leaking underground storage tank incidents. The data come from the Department of Health's Leaking Underground Storage Tank List.

An online review and analysis by 916 CONSULTING of the LUST list, as provided by EDR, has revealed that there are 7 LUST sites within approximately 0.5 miles of the target property.

Equal/Higher Elevation	Address	Direction / Distance	Map ID	Page
7-ELEVEN #25581	***16400 S GOLDEN RD***	***NW 1/8 - 1/4 (0.222 mi.)***	***D12***	***18***

Status: Closed: Facility Id: 9208:				
PLANET HONDA Status: Closed: Facility Id: 3677:	***15601 W COLFAX***	***SE 1/4 - 1/2 (0.327 mi.)***	***16***	***24***
U-HAUL MOVING & STOR Status: Closed: Facility Id: 1017:	***15500 W COLFAX AVE***	***ESE 1/4 - 1/2 (0.480 mi.)***	***24***	***41***

Lower Elevation	Address	Direction / Distance	Map ID	Page
MOUNTAIN VIEW TRAILE Status: Closed: Facility Id: 14688:	***16100 S GOLDEN RD***	***NNE 0 - 1/8 (0.070 mi.)***	***A1***	***7***
JEFFERSON COUNTY MAI Status: Closed: Facility Id: 5211:	***15725 S OLD GOLDEN R***	***ENE 1/4 - 1/2 (0.287 mi.)***	***15***	***22***
CSP - CAMP GEORGE WE Status: Closed: Facility Id: 2660:	1096 MCINTYRE ST	E 1/4 - 1/2 (0.376 mi.)	E21	34
BAJWA BROTHERS LLC Status: Closed: Facility Id: 8240:	***15495 W COLFAX AVE***	***ESE 1/4 - 1/2 (0.476 mi.)***	***23***	***35***

Lists of state and tribal registered storage tanks

UST: The Underground Storage Tank database contains registered USTs. USTs are regulated under Subtitle I of the Resource Conservation and Recovery Act (RCRA). The source is the State Oil Inspector's Office's Tank List.

An online review and analysis by 916 CONSULTING of the UST list, as provided by EDR, has revealed that there are 3 UST sites within approximately 0.25 miles of the target property.

Equal/Higher Elevation	Address	Direction / Distance	Map ID	Page
7-ELEVEN #25581 Facility Id: 9208: Tank Tag: 9208-1: Tank Tag: 9208-1: Tank Tag: 9208-2: Tank Tag: 9208-2: Tank Tag: 9208-3: Tank Tag: 9208-3: Tank Status: Permanently Closed: Tank Status: Permanently Closed: Tank Status: Permanently Closed:	***16400 S GOLDEN RD***	***NW 1/8 - 1/4 (0.222 mi.)***	***D12***	***18***

Lower Elevation	Address	Direction / Distance	Map ID	Page
MOUNTAIN VIEW TRAILE	***16100 S GOLDEN RD***	***NNE 0 - 1/8 (0.070 mi.)***	***A1***	***7***

Facility Id: 14688: Tank Tag: 14688-1: Tank Tag: 14688-1: Tank Status: Permanently Closed:				
GOLDEN PROPERTIES Facility Id: 10515: Tank Tag: 10515-1: Tank Tag: 10515-1: Tank Tag: 10515-2: Tank Tag: 10515-2: Tank Status: Permanently Closed: Tank Status: Permanently Closed:	15970 S OLD GOLDEN R	ENE 1/8 - 1/4 (0.167 mi.)	C6	14

AST: The Aboveground Storage Tank database contains registered ASTs. The source is the State Oil Inspector's Office's Tank List.

An online review and analysis by 916 CONSULTING of the AST list, as provided by EDR, has revealed that there is 1 AST site within approximately 0.25 miles of the target property.

Equal/Higher Elevation	Address	Direction / Distance	Map ID	Page
UA RENTAL INC Facility Id: 17108: Tank Status: Permanently Closed: Tank Status: Permanently Closed:	16350 S GOLDEN RD	NW 1/8 - 1/4 (0.173 mi.)	10	16

Lists of state and tribal voluntary cleanup sites

VCP: Sites for which the Voluntary Cleanup Program has received applications.

An online review and analysis by 916 CONSULTING of the VCP list, as provided by EDR, has revealed that there is 1 VCP site within approximately 0.5 miles of the target property.

Equal/Higher Elevation	Address	Direction / Distance	Map ID	Page
880-890 MCINTYRE ST File Number: RV 131022-1:	880-890 MCINTYRE ST	ESE 1/4 - 1/2 (0.414 mi.)	22	35

Lists of state and tribal brownfield sites

BROWNFIELDS: Brownfields Sites Listing

An online review and analysis by 916 CONSULTING of the BROWNFIELDS list, as provided by EDR, has revealed that there is 1 BROWNFIELDS site within approximately 0.5 miles of the target property.

Lower Elevation	Address	Direction / Distance	Map ID	Page
PLEASANT VIEW PCE	10TH AVENUE AND LOVE	E 1/4 - 1/2 (0.493 mi.)	25	43

EXECUTIVE SUMMARY

ADDITIONAL ENVIRONMENTAL RECORDS

Other Ascertainable Records

RCRA NonGen / NLR: RCRAInfo is EPA's comprehensive information system, providing access to data supporting the Resource Conservation and Recovery Act (RCRA) of 1976 and the Hazardous and Solid Waste Amendments (HSWA) of 1984. The database includes selective information on sites which generate, transport, store, treat and/or dispose of hazardous waste as defined by the Resource Conservation and Recovery Act (RCRA). Non-Generators do not presently generate hazardous waste.

An online review and analysis by 916 CONSULTING of the RCRA NonGen / NLR list, as provided by EDR, has revealed that there are 2 RCRA NonGen / NLR sites within approximately 0.25 miles of the target property.

Lower Elevation	Address	Direction / Distance	Map ID	Page
EVERGREEN DISPOSAL EPA ID:: COD980807929:	GOLDEN ROAD & NOBEL	ENE 1/8 - 1/4 (0.159 mi.)	B4	9
JE-MERIT CONSTRUCTIO EPA ID:: COR000000935:	***15967 OLD GOLDEN RD***	***ENE 1/8 - 1/4 (0.165 mi.)***	***B5***	***11***

ICIS: The Integrated Compliance Information System (ICIS) supports the information needs of the national enforcement and compliance program as well as the unique needs of the National Pollutant Discharge Elimination System (NPDES) program.

An online review and analysis by 916 CONSULTING of the ICIS list, as provided by EDR, has revealed that there is 1 ICIS site within approximately 0.25 miles of the target property.

Lower Elevation	Address	Direction / Distance	Map ID	Page
MOUNTAIN VIEW VILLAG FRS ID:: 110010590574:	***16100 S GOLDEN RD***	***NNE 0 - 1/8 (0.070 mi.)***	***A2***	***8***

FINDS: The Facility Index System contains both facility information and "pointers" to other sources of information that contain more detail. These include: RCRIS; Permit Compliance System (PCS); Aerometric Information Retrieval System (AIRS); FATES (FIFRA [Federal Insecticide Fungicide Rodenticide Act] and TSCA Enforcement System, FTTS [FIFRA/TSCA Tracking System]; CERCLIS; DOCKET (Enforcement Docket used to manage and track information on civil judicial enforcement cases for all environmental statutes); Federal Underground Injection Control (FURS); Federal Reporting Data System (FRDS); Surface Impoundments (SIA); TSCA Chemicals in Commerce Information System (CICS); PADS; RCRA-J (medical waste transporters/disposers); TRIS; and TSCA. The source of this database is the U.S. EPA/NTIS.

An online review and analysis by 916 CONSULTING of the FINDS list, as provided by EDR, has revealed that there are 7 FINDS sites within approximately 0.25 miles of the target property.

Equal/Higher Elevation	Address	Direction / Distance	Map ID	Page
7-ELEVEN # 25581 Registry ID:: 110022869109:	***16400 SOUTH GOLDEN R***	***NW 1/8 - 1/4 (0.222 mi.)***	***D13***	***20***

Lower Elevation	Address	Direction / Distance	Map ID	Page
MOUNTAIN VIEW VILLAG	***16100 S GOLDEN RD***	***NNE 0 - 1/8 (0.070 mi.)***	***A2***	***8***

Registry ID:: 110010590574:				
EISINGER SMITH, INC. Registry ID:: 110070279784:	1055 ORCHARD ST. #B	NE 1/8 - 1/4 (0.153 mi.)	3	9
JE-MERIT CONSTRUCTIO Registry ID:: 110002993896:	***15967 OLD GOLDEN RD***	***ENE 1/8 - 1/4 (0.165 mi.)***	***B5***	***11***
MOUNTAIN SIDE GEAR R Registry ID:: 110071234837:	15985 S. GOLDEN ROAD	ENE 1/8 - 1/4 (0.167 mi.)	B8	15
STEVE'S CARBURATOR (Registry ID:: 110012349805:	15985 SOUTH GOLDEN R	ENE 1/8 - 1/4 (0.167 mi.)	B9	16
EVERGREEN DISPOSAL Registry ID:: 110002966773:	***GOLDEN ROAD & NOBEL***	***ENE 1/8 - 1/4 (0.179 mi.)***	***C11***	***17***

EXECUTIVE SUMMARY

There were no unmapped sites in this report.

OVERVIEW MAP - 7813539.2S

0 1/4 1/2 1 Miles

- Target Property
- Sites at elevations higher than or equal to the target property
- Sites at elevations lower than the target property
- National Priority List Sites
- Indian Reservations BIA
- Power transmission lines
- Special Flood Hazard Area (1%)
- 0.2% Annual Chance Flood Hazard
- National Wetland Inventory
- State Wetlands

This report includes Interactive Map Layers to display and/or hide map information. The legend includes only those icons for the default map view.

SITE NAME: Residence ADDRESS: 16121 W. 10th Golden CO 80401 LAT/LONG: 39.733036 / 105.18178	CLIENT: 916 Consulting CONTACT: Ken Feldman INQUIRY #: 7813539.2s DATE: November 07, 2024 1:49 pm

Copyright © 2024 EDR, Inc. © 2015 TomTom Rel. 2015.

DETAIL MAP - 7813539.2S

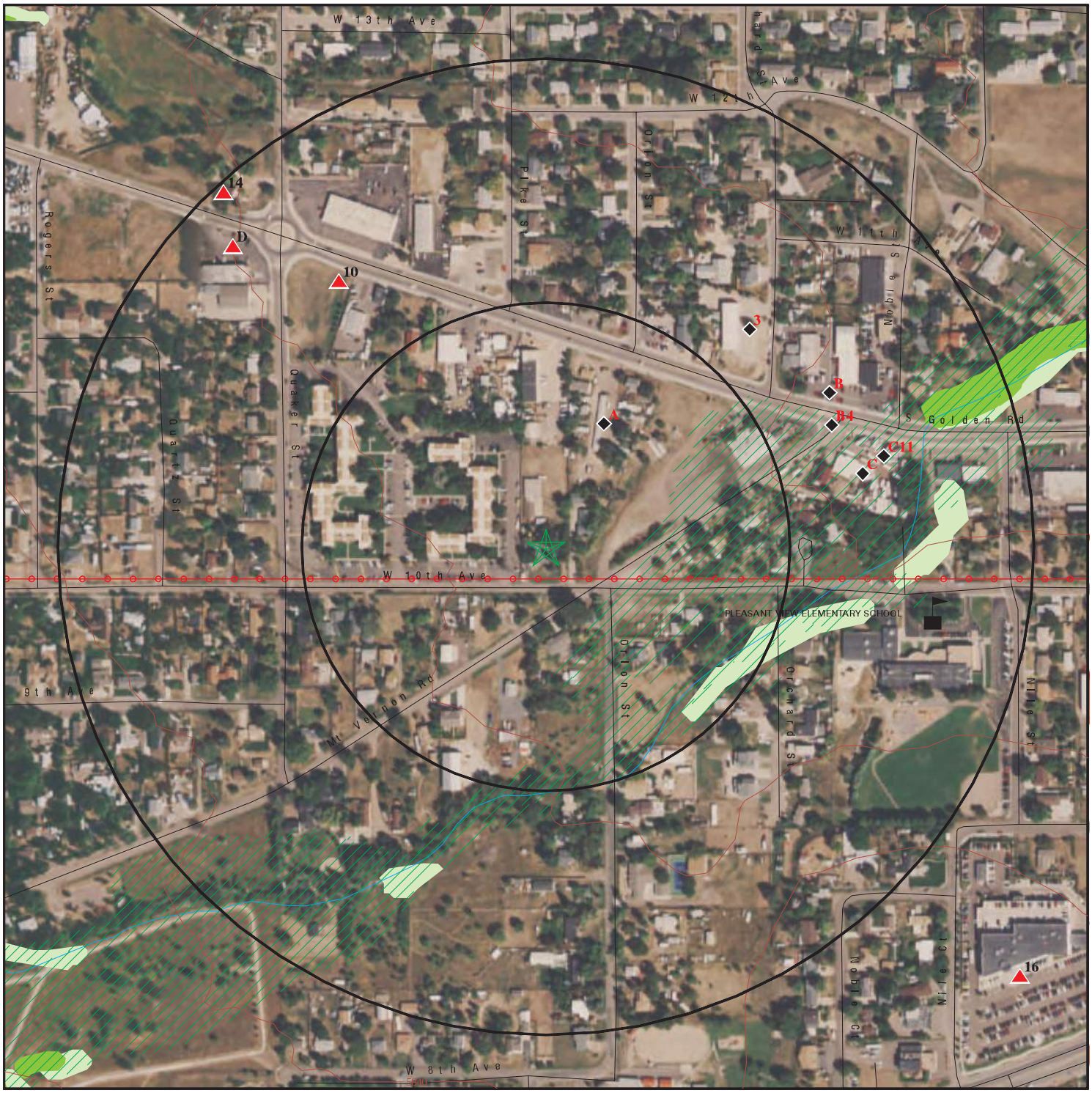

Target Property

Sites at elevations higher than or equal to the target property

Sites at elevations lower than the target property

Sensitive Receptors

National Priority List Sites

0 1/16 1/8 1/4 Miles

Indian Reservations BIA

Power transmission lines

Special Flood Hazard Area (1%)

0.2% Annual Chance Flood Hazard

National Wetland Inventory

State Wetlands

This report includes Interactive Map Layers to display and/or hide map information. The legend includes only those icons for the default map view.

SITE NAME:	Residence	CLIENT:	916 Consulting
ADDRESS:	16121 W. 10th Golden CO 80401	CONTACT:	Ken Feldman
LAT/LONG:	39.733036 / 105.18178	INQUIRY #:	7813539.2s
		DATE:	November 07, 2024 1:52 pm

Copyright © 2024 EDR, Inc. © 2015 TomTom Rel. 2015.

MAP FINDINGS SUMMARY

Database	Search Distance (Miles)	Target Property	< 1/8	1/8 - 1/4	1/4 - 1/2	1/2 - 1	> 1	Total Plotted
STANDARD ENVIRONMENTAL RECORDS								
Lists of Federal NPL (Superfund) sites								
NPL	1.000		0	0	0	0	NR	0
Proposed NPL	1.000		0	0	0	0	NR	0
Lists of Federal Delisted NPL sites								
Delisted NPL	0.500		0	0	0	NR	NR	0
Lists of Federal sites subject to CERCLA removals and CERCLA orders								
SEMS	0.500		0	0	0	NR	NR	0
Lists of Federal CERCLA sites with NFRAP								
SEMS-ARCHIVE	0.500		0	0	1	NR	NR	1
Lists of Federal RCRA facilities undergoing Corrective Action								
CORRACTS	1.000		0	0	0	3	NR	3
Lists of Federal RCRA TSD facilities								
RCRA-TSDF	0.500		0	0	0	NR	NR	0
Lists of Federal RCRA generators								
RCRA-LQG	0.250		0	0	NR	NR	NR	0
RCRA-SQG	0.250		0	0	NR	NR	NR	0
RCRA-VSQG	0.250		0	0	NR	NR	NR	0
Federal institutional controls / engineering controls registries								
US ENG CONTROLS	0.250		0	0	NR	NR	NR	0
US INST CONTROLS	0.250		0	0	NR	NR	NR	0
Federal ERNS list								
ERNS	0.250		0	0	NR	NR	NR	0
Lists of state- and tribal hazardous waste facilities								
SHWS	N/A		N/A	N/A	N/A	N/A	N/A	N/A
Lists of state and tribal landfills and solid waste disposal facilities								
SWF/LF	0.500		0	0	0	NR	NR	0
SHWF	0.500		0	0	1	NR	NR	1
Lists of state and tribal leaking storage tanks								
LTANKS	0.500		1	3	8	NR	NR	12
LAST	0.500		0	0	0	NR	NR	0
LUST	0.500		1	1	5	NR	NR	7

MAP FINDINGS SUMMARY

Database	Search Distance (Miles)	Target Property	< 1/8	1/8 - 1/4	1/4 - 1/2	1/2 - 1	> 1	Total Plotted
INDIAN LUST	0.500		0	0	0	NR	NR	0
Lists of state and tribal registered storage tanks								
UST	0.250		1	2	NR	NR	NR	3
AST	0.250		0	1	NR	NR	NR	1
INDIAN UST	0.250		0	0	NR	NR	NR	0
State and tribal institutional control / engineering control registries								
AUL	0.250		0	0	NR	NR	NR	0
Lists of state and tribal voluntary cleanup sites								
VCP	0.500		0	0	1	NR	NR	1
INDIAN VCP	0.500		0	0	0	NR	NR	0
Lists of state and tribal brownfield sites								
BROWNFIELDS	0.500		0	0	1	NR	NR	1
ADDITIONAL ENVIRONMENTAL RECORDS								
Local Brownfield lists								
US BROWNFIELDS	0.250		0	0	NR	NR	NR	0
Local Lists of Landfill / Solid Waste Disposal Sites								
HIST LF	0.250		0	0	NR	NR	NR	0
INDIAN ODI	0.500		0	0	0	NR	NR	0
IHS OPEN DUMPS	0.500		0	0	0	NR	NR	0
DENVER CO HIST FILL	0.500		0	0	0	NR	NR	0
Local Lists of Hazardous waste / Contaminated Sites								
CDL	0.250		0	0	NR	NR	NR	0
US CDL	0.250		0	0	NR	NR	NR	0
Records of Emergency Release Reports								
SPILLS	0.250		0	0	NR	NR	NR	0
Other Ascertainable Records								
RCRA NonGen / NLR	0.250		0	2	NR	NR	NR	2
TSCA	0.250		0	0	NR	NR	NR	0
TRIS	0.250		0	0	NR	NR	NR	0
ROD	1.000		0	0	0	0	NR	0
RAATS	0.250		0	0	NR	NR	NR	0
PADS	0.250		0	0	NR	NR	NR	0
ICIS	0.250		1	0	NR	NR	NR	1
INDIAN RESERV	1.000		0	0	0	0	NR	0
FUSRAP	1.000		0	0	0	0	NR	0
US AIRS	0.250		0	0	NR	NR	NR	0
MINES MRDS	TP		NR	NR	NR	NR	NR	0

MAP FINDINGS SUMMARY

Database	Search Distance (Miles)	Target Property	< 1/8	1/8 - 1/4	1/4 - 1/2	1/2 - 1	> 1	Total Plotted
ABANDONED MINES	TP		NR	NR	NR	NR	NR	0
FINDS	0.250		1	6	NR	NR	NR	7
DOCKET HWC	TP		NR	NR	NR	NR	NR	0
UXO	1.000		0	0	0	0	NR	0
ECHO	TP		NR	NR	NR	NR	NR	0
FUELS PROGRAM	0.250		0	0	NR	NR	NR	0
PFAS NPL	0.250		0	0	NR	NR	NR	0
PFAS FEDERAL SITES	0.250		0	0	NR	NR	NR	0
PFAS TRIS	0.250		0	0	NR	NR	NR	0
PFAS TSCA	0.250		0	0	NR	NR	NR	0
PFAS RCRA MANIFEST	0.250		0	0	NR	NR	NR	0
PFAS ATSDR	0.250		0	0	NR	NR	NR	0
PFAS WQP	0.250		0	0	NR	NR	NR	0
PFAS PROJECT	0.250		0	0	NR	NR	NR	0
PFAS NPDES	0.250		0	0	NR	NR	NR	0
PFAS ECHO	0.250		0	0	NR	NR	NR	0
PFAS ECHO FIRE TRAIN	0.250		0	0	NR	NR	NR	0
PFAS PT 139 AIRPORT	0.250		0	0	NR	NR	NR	0
AQUEOUS FOAM NRC	0.250		0	0	NR	NR	NR	0
BIOSOLIDS	TP		NR	NR	NR	NR	NR	0
E MANIFEST	0.250		0	0	NR	NR	NR	0
PFAS	TP		NR	NR	NR	NR	NR	0
AQUEOUS FOAM	0.250		0	0	NR	NR	NR	0
AIRS	0.250		0	0	NR	NR	NR	0
METHANE SITE	0.250		0	0	NR	NR	NR	0
Methane Investig	TP		NR	NR	NR	NR	NR	0
DRYCLEANERS	0.250		0	0	NR	NR	NR	0
LEAD	TP		NR	NR	NR	NR	NR	0
MINES	0.250		0	0	NR	NR	NR	0
UIC	TP		NR	NR	NR	NR	NR	0
EDR RECOVERED GOVERNMENT ARCHIVES								
Exclusive Recovered Govt. Archives								
RGA LF	0.500		0	0	0	NR	NR	0
RGA LUST	0.500		0	0	0	NR	NR	0
- Totals --		0	5	15	17	3	0	40

NOTES:

TP = Target Property

NR = Not Requested at this Search Distance

Sites may be listed in more than one database

N/A = This State does not maintain a SHWS list. See the Federal CERCLIS list.

A1 NNE < 1/8 0.070 mi. 368 ft. | **MOUNTAIN VIEW TRAILER VILLAGE**
16100 S GOLDEN RD
GOLDEN, CO 80401 | **UST LUST LTANKS** | **U003517771 N/A**

Site 1 of 2 in cluster A

Relative: Lower

Actual: 5809 ft.

LUST:

Name:	MOUNTAIN VIEW TRAILER VILLAGE
Address:	16100 S GOLDEN RD
City,State,Zip:	GOLDEN, CO 80401
Facility Id:	14688
Status:	**Closed**
Event ID:	7182
Confirmed Release:	01/05/1998
Contact Name:	Technical Assistance Line
Contact Phone:	303-318-8547
Contact Email:	Not reported
Latitude Degrees:	39.734099
Longitude Degrees:	-105.166179

Click here for COSTIS:

LTANKS:

Facility ID:	14688
Name:	MOUNTAIN VIEW TRAILER VILLAGE
Address:	16100 S GOLDEN RD
City,State,Zip:	GOLDEN, CO 80401
NFA Type:	Pre-RBCA
Status:	Closed
Event ID:	7182
Release Date:	01/05/1998
Closed Date:	12/30/1998
Contact:	John Axelson
Phone:	(303) 318-8547
Email:	cdle_ops_public_record_center@state.co.us
Release Source:	Not reported
Release Cause:	Not reported
Reimbursement Total:	Not reported
Release Number:	REL-008689
URL:	https://socgov18.force.com/s/release/a183h000003KXW7

UST:

Tank Tag:	14688-1
Substance:	GSLN
Name:	MOUNTAIN VIEW TRAILER VILLAGE
Address:	16100 S GOLDEN RD
City,State,Zip:	GOLDEN 80401
Tank Tag:	14688-1
Substance:	GSLN
Facility ID:	14688
Owner Name:	Mountain View Trailer Village Inc
Owner Address:	16100 Golden Rd, Golden, CO 80401
Owner City:	Golden
Owner State:	CO
Owner Zip:	80401
Facility Type:	Non-Retail
Facility Category:	Other
Capacity:	3000

MOUNTAIN VIEW TRAILER VILLAGE (Continued) **U003517771**

Date Closed: 11/13/1998
Tank Status: Permanently Closed
Date Tank Installed: Not reported
Tank Type: UST
Latitude: 39.734099
Longitude: -105.166179
Tank Material: Not Listed
Tank Wall Type: Not reported
Piping Type: Other
Piping System: Not reported
Piping Material: Not Listed
Piping Wall Type: None
Overfill Prevention: Not reported
Tank ID: a1J3h000001jpKS
Account Name: ACCT-07910

A2 **MOUNTAIN VIEW VILLAGE MHP** **ICIS** **1004448334**
NNE **16100 S GOLDEN RD** **ECHO** **N/A**
< 1/8 **GOLDEN, CO 80403** **FINDS**
0.070 mi.
368 ft. **Site 2 of 2 in cluster A**

Relative:
Lower

Actual:
5809 ft.

ICIS:
Enforcement Action ID: 08-1994-0150
FRS ID: 110010590574
Action Name: MOUNTAIN VIEW VILLAGE MOBILE HOME PARK
Facility Name: MOUNTAIN VIEW VILLAGE MHP
Facility Address: 16100 S GOLDEN RD
GOLDEN, CO 80403
Enforcement Action Type: SDWA 1414G2 AO For Compliance (PWS)
Facility County: JEFFERSON
Program System Acronym: ICIS
Enforcement Action Forum Desc: Administrative - Formal
EA Type Code: 1414G2
Facility SIC Code: 6515
Federal Facility ID: Not reported
Latitude in Decimal Degrees: 39.734483
Longitude in Decimal Degrees: -105.180952
Permit Type Desc: Not reported
Program System Acronym: 7805
Facility NAICS Code: Not reported
Tribal Land Code: Not reported

Facility Name: MOUNTAIN VIEW VILLAGE MHP
Address: 16100 S GOLDEN RD
Tribal Indicator: N
Fed Facility: Not reported
NAIC Code: Not reported
SIC Code: 6515

FINDS:
Registry ID: 110010590574

Click Here for FRS Facility Detail Report:

Environmental Interest/Information System:
The Integrated Compliance Information System (ICIS) provides a

MOUNTAIN VIEW VILLAGE MHP (Continued) **1004448334**

database that, when complete, will contain integrated enforcement and compliance information across most of EPA's programs. The vision for ICIS is to replace EPA's independent databases that contain enforcement data with a single repository for that information. Currently, ICIS contains all Federal Administrative and Judicial enforcement actions and a subset of the Permit Compliance System (PCS), which supports the National Pollutant Discharge Elimination System (NPDES). This information is maintained in ICIS by EPA in the Regional offices and it at Headquarters. A future release of ICIS will completely replace PCS and will integrate that information with Federal actions already in the system. ICIS also has the capability to track other activities that support compliance and enforcement programs, including incident tracking, compliance assistance, and compliance monitoring.

ECHO:

Envid:	1004448334
Registry ID:	110010590574
DFR URL:	http://echo.epa.gov/detailed-facility-report?fid=110010590574
Name:	MOUNTAIN VIEW VILLAGE MHP
Address:	16100 S GOLDEN RD
City,State,Zip:	GOLDEN, CO 80403

3
NE
1/8-1/4
0.153 mi.
806 ft.

EISINGER SMITH, INC.
1055 ORCHARD ST. #B
GOLDEN, CO 80401

FINDS **1024376503**
N/A

Relative:
Lower

Actual:
5804 ft.

FINDS:

Registry ID:	110070279784

Click Here for FRS Facility Detail Report:

Environmental Interest/Information System:

The Department of Labor, Occupational Safety and Health Administration information system consists of inspection case detail for approximately 100,000 OSHA inspections conducted annually. The FRS dataset includes facilities that had inspections within the last 7 years within the mining, oil and gas, utilities, and manufacturing sectors.

B4
ENE
1/8-1/4
0.159 mi.
840 ft.

EVERGREEN DISPOSAL
GOLDEN ROAD & NOBEL
GOLDEN, CO 80401

RCRA NonGen / NLR **1000357873**
N/A

Site 1 of 4 in cluster B

Relative:
Lower

Actual:
5797 ft.

RCRA Listings:

Date Form Received by Agency:	20021108
Handler Name:	Evergreen Disposal
Handler Address:	Golden Road & Nobel
Handler City,State,Zip:	GOLDEN, CO 80401
EPA ID:	COD980807929
Contact Name:	Not reported
Contact Address:	Not reported
Contact City,State,Zip:	Not reported
Contact Telephone:	Not reported

EVERGREEN DISPOSAL (Continued) **1000357873**

Contact Fax: Not reported
Contact Email: Not reported
Contact Title: Not reported
EPA Region: 08
Land Type: Not reported
Federal Waste Generator Description: Not a generator, verified
Non-Notifier: X
Biennial Report Cycle: Not reported
Accessibility: Not reported
Active Site Indicator: Not reported
State District Owner: Not reported
State District: Not reported
Mailing Address: Not reported
Mailing City,State,Zip: Not reported
Owner Name: Not reported
Owner Type: Not reported
Operator Name: Not reported
Operator Type: Not reported
Short-Term Generator Activity: No
Importer Activity: No
Mixed Waste Generator: No
Transporter Activity: No
Transfer Facility Activity: No
Recycler Activity with Storage: No
Small Quantity On-Site Burner Exemption: No
Smelting Melting and Refining Furnace Exemption: No
Underground Injection Control: No
Off-Site Waste Receipt: No
Universal Waste Indicator: No
Universal Waste Destination Facility: No
Federal Universal Waste: No
Active Site State-Reg Handler: ---
Federal Facility Indicator: Not reported
Hazardous Secondary Material Indicator: N
Sub-Part K Indicator: Not reported
2018 GPRA Permit Baseline: Not on the Baseline
2018 GPRA Renewals Baseline: Not on the Baseline
202 GPRA Corrective Action Baseline: No
Subject to Corrective Action Universe: No
Non-TSDFs Where RCRA CA has Been Imposed Universe: No
Corrective Action Priority Ranking: No NCAPS ranking
Environmental Control Indicator: No
Institutional Control Indicator: No
Human Exposure Controls Indicator: N/A
Groundwater Controls Indicator: N/A
Significant Non-Complier Universe: No
Unaddressed Significant Non-Complier Universe: No
Addressed Significant Non-Complier Universe: No
Significant Non-Complier With a Compliance Schedule Universe: No
Financial Assurance Required: Not reported
Handler Date of Last Change: 20000914
Recognized Trader-Importer: No
Recognized Trader-Exporter: No
Importer of Spent Lead Acid Batteries: No
Exporter of Spent Lead Acid Batteries: No
Recycler Activity Without Storage: No
Manifest Broker: No

EVERGREEN DISPOSAL (Continued) **1000357873**

Sub-Part P Indicator: No

Historic Generators:
Receive Date: 20021108
Handler Name: EVERGREEN DISPOSAL
Federal Waste Generator Description: Not a generator, verified
State District Owner: Not reported
Large Quantity Handler of Universal Waste: No
Recognized Trader Importer: No
Recognized Trader Exporter: No
Spent Lead Acid Battery Importer: No
Spent Lead Acid Battery Exporter: No
Current Record: Yes
Non Storage Recycler Activity: Not reported
Electronic Manifest Broker: Not reported

List of NAICS Codes and Descriptions:
NAICS Codes: No NAICS Codes Found

Facility Has Received Notices of Violations:
Violations: No Violations Found

Evaluation Action Summary:
Evaluations: No Evaluations Found

B5 **JE-MERIT CONSTRUCTION** **RCRA NonGen / NLR** **1000985386**
ENE **15967 OLD GOLDEN RD** **ECHO** **N/A**
1/8-1/4 **GOLDEN, CO 80401** **FINDS**
0.165 mi.
873 ft. **Site 2 of 4 in cluster B**

Relative:
Lower

Actual:
5797 ft.

RCRA Listings:
Date Form Received by Agency: 19950616
Handler Name: Je-Merit Construction
Handler Address: Old Golden Rd
Handler City,State,Zip: GOLDEN, CO 80401
EPA ID: COR000000935
Contact Name: GREG GARDNER
Contact Address: 1670 BROADWAY, SUITE 3200
Contact City,State,Zip: DENVER, CO 80202
Contact Telephone: 303-830-6933
Contact Fax: Not reported
Contact Email: Not reported
Contact Title: Not reported
EPA Region: 08
Land Type: Private
Federal Waste Generator Description: Not a generator, verified
Non-Notifier: Not reported
Biennial Report Cycle: Not reported
Accessibility: Not reported
Active Site Indicator: Not reported
State District Owner: Not reported
State District: Not reported
Mailing Address: BROADWAY, SUITE 3200

JE-MERIT CONSTRUCTION (Continued) **1000985386**

Mailing City,State,Zip: DENVER, CO 80202
Owner Name: Norm Cechini
Owner Type: Private
Operator Name: Not reported
Operator Type: Not reported
Short-Term Generator Activity: No
Importer Activity: No
Mixed Waste Generator: No
Transporter Activity: No
Transfer Facility Activity: No
Recycler Activity with Storage: No
Small Quantity On-Site Burner Exemption: No
Smelting Melting and Refining Furnace Exemption: No
Underground Injection Control: No
Off-Site Waste Receipt: No
Universal Waste Indicator: No
Universal Waste Destination Facility: No
Federal Universal Waste: No
Active Site State-Reg Handler: ---
Federal Facility Indicator: Not reported
Hazardous Secondary Material Indicator: N
Sub-Part K Indicator: Not reported
2018 GPRA Permit Baseline: Not on the Baseline
2018 GPRA Renewals Baseline: Not on the Baseline
202 GPRA Corrective Action Baseline: No
Subject to Corrective Action Universe: No
Non-TSDFs Where RCRA CA has Been Imposed Universe: No
Corrective Action Priority Ranking: No NCAPS ranking
Environmental Control Indicator: No
Institutional Control Indicator: No
Human Exposure Controls Indicator: N/A
Groundwater Controls Indicator: N/A
Significant Non-Complier Universe: No
Unaddressed Significant Non-Complier Universe: No
Addressed Significant Non-Complier Universe: No
Significant Non-Complier With a Compliance Schedule Universe: No
Financial Assurance Required: Not reported
Handler Date of Last Change: 20000915
Recognized Trader-Importer: No
Recognized Trader-Exporter: No
Importer of Spent Lead Acid Batteries: No
Exporter of Spent Lead Acid Batteries: No
Recycler Activity Without Storage: No
Manifest Broker: No
Sub-Part P Indicator: No

Hazardous Waste Summary:
Waste Code: D001
Waste Description: Ignitable Waste

Waste Code: U159
Waste Description: 2-Butanone (I,T) (Or) Methyl Ethyl Ketone (Mek) (I,T)

Handler - Owner Operator:
Owner/Operator Indicator: Owner

JE-MERIT CONSTRUCTION (Continued) **1000985386**

Owner/Operator Name: NORM CECHINI
Legal Status: Private
Date Became Current: Not reported
Date Ended Current: Not reported
Owner/Operator Address: 12890 W 16TH DR
Owner/Operator City,State,Zip: GOLDEN, CO 80401
Owner/Operator Telephone: 303-232-1776
Owner/Operator Telephone Ext: Not reported
Owner/Operator Fax: Not reported
Owner/Operator Email: Not reported

Historic Generators:
Receive Date: 19950616
Handler Name: JE-MERIT CONSTRUCTION
Federal Waste Generator Description: Not a generator, verified
State District Owner: Not reported
Large Quantity Handler of Universal Waste: No
Recognized Trader Importer: No
Recognized Trader Exporter: No
Spent Lead Acid Battery Importer: No
Spent Lead Acid Battery Exporter: No
Current Record: Yes
Non Storage Recycler Activity: Not reported
Electronic Manifest Broker: Not reported

List of NAICS Codes and Descriptions:
NAICS Codes: No NAICS Codes Found

Facility Has Received Notices of Violations:
Violations: No Violations Found

Evaluation Action Summary:
Evaluations: No Evaluations Found

FINDS:
Registry ID: 110002993896

Click Here for FRS Facility Detail Report:

Environmental Interest/Information System:
The Resource Conservation and Recovery Act Information System (RCRAInfo) is EPA's comprehensive information system in support of the Resource Conservation and Recovery Act (RCRA) of 1976 and the Hazardous and Solid Waste Amendments (HSWA) of 1984. It tracks many types of information about generators, transporters, treaters, storers, and disposers of hazardous waste.

ECHO:
Envid: 1000985386
Registry ID: 110002993896
DFR URL: http://echo.epa.gov/detailed-facility-report?fid=110002993896
Name: JE-MERIT CONSTRUCTION
Address: 15967 OLD GOLDEN RD
City,State,Zip: GOLDEN, CO 80401

C6 ENE 1/8-1/4 0.167 mi. 880 ft. | **GOLDEN PROPERTIES**
15970 S OLD GOLDEN RD
GOLDEN, CO 80401

Site 1 of 3 in cluster C | **UST** | **U003119872**
N/A

Relative: Lower

Actual: 5797 ft.

UST:

Tank Tag:	10515-2
Substance:	GSLN
Name:	GOLDEN PROPERTIES
Address:	15970 S OLD GOLDEN RD
City,State,Zip:	GOLDEN 80401
Tank Tag:	10515-2
Substance:	GSLN
Facility ID:	10515
Owner Name:	Betty Makris
Owner Address:	11830 W 76th Dr, Arvada, CO 80005
Owner City:	Arvada
Owner State:	CO
Owner Zip:	80005
Facility Type:	Non-Retail
Facility Category:	Other
Capacity:	6000
Date Closed:	11/01/1991
Tank Status:	Permanently Closed
Date Tank Installed:	01/01/1973
Tank Type:	UST
Latitude:	0
Longitude:	0
Tank Material:	Asphalt Coated or Bare Steel
Tank Wall Type:	Not reported
Piping Type:	UG: Underground
Piping System:	Not reported
Piping Material:	Bare Steel
Piping Wall Type:	None
Overfill Prevention:	Not reported
Tank ID:	a1J3h000001jrKr
Account Name:	ACCT-05212

Tank Tag:	10515-1
Substance:	GSLN
Name:	GOLDEN PROPERTIES
Address:	15970 S OLD GOLDEN RD
City,State,Zip:	GOLDEN 80401
Tank Tag:	10515-1
Substance:	GSLN
Facility ID:	10515
Owner Name:	Betty Makris
Owner Address:	11830 W 76th Dr, Arvada, CO 80005
Owner City:	Arvada
Owner State:	CO
Owner Zip:	80005
Facility Type:	Non-Retail
Facility Category:	Other
Capacity:	8000
Date Closed:	11/01/1991
Tank Status:	Permanently Closed
Date Tank Installed:	01/01/1973
Tank Type:	UST

GOLDEN PROPERTIES (Continued) **U003119872**

Latitude:	0
Longitude:	0
Tank Material:	Asphalt Coated or Bare Steel
Tank Wall Type:	Not reported
Piping Type:	UG: Underground
Piping System:	Not reported
Piping Material:	Bare Steel
Piping Wall Type:	None
Overfill Prevention:	Not reported
Tank ID:	a1J3h000001jrKq
Account Name:	ACCT-05212

C7 **MAKRIS PROPERTY** **LTANKS** **S121703923**
ENE **15970 S OLD GOLDEN RD** **N/A**
1/8-1/4 **GOLDEN, CO 80401**
0.167 mi.
880 ft. **Site 2 of 3 in cluster C**

Relative:
Lower

Actual:
5797 ft.

LTANKS:

Facility ID:	12563
Name:	MAKRIS PROPERTY
Address:	15970 S OLD GOLDEN RD
City,State,Zip:	GOLDEN, CO 80401
NFA Type:	Pre-RBCA
Status:	Closed
Event ID:	218
Release Date:	12/20/1991
Closed Date:	06/28/1995
Contact:	Joe'l Lambe
Phone:	(303) 318-8547
Email:	cdle_ops_public_record_center@state.co.us
Release Source:	Not reported
Release Cause:	Not reported
Reimbursement Total:	Not reported
Release Number:	REL-008196
URL:	https://socgov18.force.com/s/release/a183h000003KXOA

B8 **MOUNTAIN SIDE GEAR RENTAL** **FINDS** **1027165500**
ENE **15985 S. GOLDEN ROAD UNIT A** **N/A**
1/8-1/4 **GOLDEN, CO 80401**
0.167 mi.
883 ft. **Site 3 of 4 in cluster B**

Relative:
Lower

Actual:
5797 ft.

FINDS:

Registry ID: 110071234837

Click Here for FRS Facility Detail Report:

Environmental Interest/Information System:

The Integrated Compliance Information System (ICIS) provides a database that, when complete, will contain integrated enforcement and compliance information across most of EPA's programs. The vision for ICIS is to replace EPA's independent databases that contain enforcement data with a single repository for that information. Currently, ICIS contains all Federal Administrative and Judicial enforcement actions and a subset of the Permit Compliance System (PCS), which supports the National Pollutant Discharge Elimination

MOUNTAIN SIDE GEAR RENTAL (Continued) **1027165500**

System (NPDES). This information is maintained in ICIS by EPA in the Regional offices and it at Headquarters. A future release of ICIS will completely replace PCS and will integrate that information with Federal actions already in the system. ICIS also has the capability to track other activities that support compliance and enforcement programs, including incident tracking, compliance assistance, and compliance monitoring.

B9
ENE
1/8-1/4
0.167 mi.
883 ft.

STEVE'S CARBURATOR (GOLDEN, CO) **FINDS** **1006300544**
15985 SOUTH GOLDEN ROAD **N/A**
GOLDEN, CO 80401

Site 4 of 4 in cluster B

Relative:
Lower

Actual:
5797 ft.

FINDS:
Registry ID: 110012349805

Click Here for FRS Facility Detail Report:

Environmental Interest/Information System:
The Integrated Compliance Information System (ICIS) provides a database that, when complete, will contain integrated enforcement and compliance information across most of EPA's programs. The vision for ICIS is to replace EPA's independent databases that contain enforcement data with a single repository for that information. Currently, ICIS contains all Federal Administrative and Judicial enforcement actions and a subset of the Permit Compliance System (PCS), which supports the National Pollutant Discharge Elimination System (NPDES). This information is maintained in ICIS by EPA in the Regional offices and it at Headquarters. A future release of ICIS will completely replace PCS and will integrate that information with Federal actions already in the system. ICIS also has the capability to track other activities that support compliance and enforcement programs, including incident tracking, compliance assistance, and compliance monitoring.

10
NW
1/8-1/4
0.173 mi.
911 ft.

UA RENTAL INC **AST** **A100288238**
16350 S GOLDEN RD **N/A**
GOLDEN, CO 80401

Relative:
Higher

Actual:
5815 ft.

AST:

Name:	UA RENTAL INC
Address:	16350 S GOLDEN RD
City,State,Zip:	GOLDEN 80401
Substance:	LPG
Tank Tag:	17108-1
Facility ID:	17108
Owner Name:	LPG Unknown Owner - Division Of Oil & Public Safety
Owner Address:	Denver, CO 80202
Owner City:	Denver
Owner State:	CO
Owner Zip:	80202
Facility Type:	Non-Retail
Facility Category:	LPG Only
Capacity:	1000
Tank Status:	Permanently Closed
Date Tank Installed:	Not reported

UA RENTAL INC (Continued) **A100288238**

Date Closed:	Not reported
Tank Type:	LPG
Latitude:	39.734925
Longitude:	-105.183387
Tank Material:	Not reported
Tank Wall Type:	Not reported
Piping Type:	Not reported
Piping System:	Not reported
Piping Material:	Not reported
Piping Wall Type:	Not reported
Overfill Prevention:	Not reported
Tank ID:	a1J3h000001jqxY
Account Name:	ACCT-07067

Name:	UA RENTAL INC
Address:	16350 S GOLDEN RD
City,State,Zip:	GOLDEN 80401
Substance:	LPG
Tank Tag:	17108-2
Facility ID:	17108
Owner Name:	LPG Unknown Owner - Division Of Oil & Public Safety
Owner Address:	Denver, CO 80202
Owner City:	Denver
Owner State:	CO
Owner Zip:	80202
Facility Type:	Non-Retail
Facility Category:	LPG Only
Capacity:	1000
Tank Status:	Permanently Closed
Date Tank Installed:	Not reported
Date Closed:	Not reported
Tank Type:	LPG
Latitude:	39.734925
Longitude:	-105.183387
Tank Material:	Not reported
Tank Wall Type:	Not reported
Piping Type:	Not reported
Piping System:	Not reported
Piping Material:	Not reported
Piping Wall Type:	Not reported
Overfill Prevention:	Not reported
Tank ID:	a1J3h000001jqxZ
Account Name:	ACCT-07067

C11 **EVERGREEN DISPOSAL** **ECHO** **1016189106**
ENE **GOLDEN ROAD & NOBEL** **FINDS** **N/A**
1/8-1/4 **GOLDEN, CO 80401**
0.179 mi.
946 ft. **Site 3 of 3 in cluster C**

Relative:
Lower

Actual:
5796 ft.

FINDS:
Registry ID: 110002966773

Click Here for FRS Facility Detail Report:

Environmental Interest/Information System:
The Resource Conservation and Recovery Act Information System (RCRAInfo) is EPA's comprehensive information system in support of the

EVERGREEN DISPOSAL (Continued) **1016189106**

Resource Conservation and Recovery Act (RCRA) of 1976 and the Hazardous and Solid Waste Amendments (HSWA) of 1984. It tracks many types of information about generators, transporters, treaters, storers, and disposers of hazardous waste.

ECHO:

Envid:	1016189106
Registry ID:	110002966773
DFR URL:	http://echo.epa.gov/detailed-facility-report?fid=110002966773
Name:	EVERGREEN DISPOSAL
Address:	GOLDEN ROAD & NOBEL
City,State,Zip:	GOLDEN, CO 80401

D12 NW 1/8-1/4 0.222 mi. 1174 ft. | **7-ELEVEN #25581** | **UST LUST LTANKS** | **U003748572 N/A**

16400 S GOLDEN RD
GOLDEN, CO 80401

Site 1 of 2 in cluster D

Relative: Higher

Actual: 5820 ft.

LUST:

Name:	7-ELEVEN #25581
Address:	16400 S GOLDEN RD
City,State,Zip:	GOLDEN, CO 80401
Facility Id:	9208
Status:	**Closed**
Event ID:	11147
Confirmed Release:	05/07/2010
Contact Name:	Mike Kwiecinski
Contact Phone:	303-318-8512
Contact Email:	Not reported
Latitude Degrees:	39.735056
Longitude Degrees:	-105.184846

Click here for COSTIS:

LTANKS:

Facility ID:	9208
Name:	7-ELEVEN #25581
Address:	16400 S GOLDEN RD
City,State,Zip:	GOLDEN, CO 80401
NFA Type:	Tier III
Status:	Closed
Event ID:	11147
Release Date:	05/07/2010
Closed Date:	09/28/2016
Contact:	Mike Kwiecinski
Phone:	(303) 318-8547
Email:	cdle_ops_public_record_center@state.co.us
Release Source:	Not reported
Release Cause:	Other
Reimbursement Total:	Not reported
Release Number:	REL-000142
URL:	https://socgov18.force.com/s/release/a183h000003KVIG

UST:

Tank Tag:	9208-3
Substance:	PUL

7-ELEVEN #25581 (Continued) **U003748572**

Name:	7-ELEVEN #25581
Address:	16400 S GOLDEN RD
City,State,Zip:	GOLDEN 80401
Tank Tag:	9208-3
Substance:	PUL
Facility ID:	9208
Owner Name:	7-Eleven Inc
Owner Address:	PO Box 711, Dallas, TX 75221
Owner City:	Dallas
Owner State:	TX
Owner Zip:	75221
Facility Type:	Retail
Facility Category:	Retail Gas Station
Capacity:	10000
Date Closed:	05/07/2010
Tank Status:	Permanently Closed
Date Tank Installed:	04/16/1984
Tank Type:	UST
Latitude:	39.735056
Longitude:	-105.184846
Tank Material:	ST: Cathodically Protected Steel
Tank Wall Type:	Not reported
Piping Type:	UG: Underground
Piping System:	Not reported
Piping Material:	FRP: Fiberglass Reinforced Plastic
Piping Wall Type:	None
Overfill Prevention:	FV: Fill Tube Valve
Tank ID:	a1J3h000001jmiP
Account Name:	ACCT-00064

Tank Tag:	9208-1
Substance:	RUL
Name:	7-ELEVEN #25581
Address:	16400 S GOLDEN RD
City,State,Zip:	GOLDEN 80401
Tank Tag:	9208-1
Substance:	RUL
Facility ID:	9208
Owner Name:	7-Eleven Inc
Owner Address:	PO Box 711, Dallas, TX 75221
Owner City:	Dallas
Owner State:	TX
Owner Zip:	75221
Facility Type:	Retail
Facility Category:	Retail Gas Station
Capacity:	10000
Date Closed:	05/07/2010
Tank Status:	Permanently Closed
Date Tank Installed:	04/16/1984
Tank Type:	UST
Latitude:	39.735056
Longitude:	-105.184846
Tank Material:	ST: Cathodically Protected Steel
Tank Wall Type:	Not reported
Piping Type:	UG: Underground
Piping System:	Not reported
Piping Material:	FRP: Fiberglass Reinforced Plastic

7-ELEVEN #25581 (Continued) **U003748572**

Piping Wall Type: None
Overfill Prevention: FV: Fill Tube Valve
Tank ID: a1J3h000001jmiN
Account Name: ACCT-00064

Tank Tag: 9208-2
Substance: MUL
Name: 7-ELEVEN #25581
Address: 16400 S GOLDEN RD
City,State,Zip: GOLDEN 80401
Tank Tag: 9208-2
Substance: MUL
Facility ID: 9208
Owner Name: 7-Eleven Inc
Owner Address: PO Box 711, Dallas, TX 75221
Owner City: Dallas
Owner State: TX
Owner Zip: 75221
Facility Type: Retail
Facility Category: Retail Gas Station
Capacity: 10000
Date Closed: 05/07/2010
Tank Status: Permanently Closed
Date Tank Installed: 04/16/1984
Tank Type: UST
Latitude: 39.735056
Longitude: -105.184846
Tank Material: ST: Cathodically Protected Steel
Tank Wall Type: Not reported
Piping Type: UG: Underground
Piping System: Not reported
Piping Material: FRP: Fiberglass Reinforced Plastic
Piping Wall Type: None
Overfill Prevention: FV: Fill Tube Valve
Tank ID: a1J3h000001jmiO
Account Name: ACCT-00064

D13 **7-ELEVEN # 25581** **FINDS** **1016079048**
NW **16400 SOUTH GOLDEN ROAD** **ECHO** **N/A**
1/8-1/4 **GOLDEN, CO 80401**
0.222 mi.
1174 ft. **Site 2 of 2 in cluster D**

Relative:
Higher

Actual:
5820 ft.

FINDS:
Registry ID: 110022869109

Click Here for FRS Facility Detail Report:

Environmental Interest/Information System:
THE EMISSION INVENTORY SYSTEM (EIS) MAINTAINS AN INVENTORY OF LARGE STATIONARY SOURCES AND VOLUNTARILY-REPORTED SMALLER SOURCES OF AIR POINT POLLUTANT EMITTERS. IT CONTAINS INFORMATION ABOUT FACILITY SITES AND THEIR PHYSICAL LOCATION, EMISSIONS UNITS, EMISSIONS PROCESSES, RELEASE POINTS, CONTROL APPROACHES, AND REGULATIONS. FACILITY INVENTORY DATA ARE KEPT SEPARATE FROM THE EMISSIONS DATA AND HAVE STABLE IDENTIFIERS TO IMPROVE CONTINUITY FROM YEAR TO YEAR AND TO HELP IDENTIFY DUPLICATE OR MISSING FACILITIES
ICIS-Air (AIR) AIR is the modernization of the Air Facility System

7-ELEVEN # 25581 (Continued) **1016079048**

(AFS) into the Integrated Compliance Information System (ICIS). AIR contains enforcement, compliance, and permit data for stationary sources of air pollution regulated by the EPA, State, and Local air pollution agencies.
The Air Facility System (AFS) contains compliance and permit data for stationary sources of air pollution regulated by the EPA, state, and local air pollution agencies.

The Integrated Compliance Information System (ICIS) provides a database that, when complete, will contain integrated enforcement and compliance information across most of EPA's programs. The vision for ICIS is to replace EPA's independent databases that contain enforcement data with a single repository for that information. Currently, ICIS contains all Federal Administrative and Judicial enforcement actions and a subset of the Permit Compliance System (PCS), which supports the National Pollutant Discharge Elimination System (NPDES). This information is maintained in ICIS by EPA in the Regional offices and it at Headquarters. A future release of ICIS will completely replace PCS and will integrate that information with Federal actions already in the system. ICIS also has the capability to track other activities that support compliance and enforcement programs, including incident tracking, compliance assistance, and compliance monitoring.

ECHO:

Envid:	1016079048
Registry ID:	110022869109
DFR URL:	http://echo.epa.gov/detailed-facility-report?fid=110022869109
Name:	7-ELEVEN # 25581
Address:	16400 SOUTH GOLDEN ROAD
City,State,Zip:	GOLDEN, CO 80401

14
NW
1/8-1/4
0.245 mi.
1296 ft.

FORMER GAS STATION **LTANKS** **S125421237**
16415 S GOLDEN RD **N/A**
GOLDEN, CO 80401

Relative:
Higher

Actual:
5821 ft.

LTANKS:

Facility ID:	20221
Name:	FORMER GAS STATION
Address:	16415 S GOLDEN RD
City,State,Zip:	GOLDEN, CO 80401
NFA Type:	Tier I
Status:	Closed
Event ID:	12880
Release Date:	Not reported
Closed Date:	02/06/2018
Contact:	Michelle Howard
Phone:	(303) 318-8547
Email:	cdle_ops_public_record_center@state.co.us
Release Source:	Not reported
Release Cause:	Other
Reimbursement Total:	Not reported
Release Number:	REL-005658
URL:	https://socgov18.force.com/s/release/a183h000003KWjE

15 ENE 1/4-1/2 0.287 mi. 1516 ft. | **JEFFERSON COUNTY MAINTENANCE CENTER**
15725 S OLD GOLDEN RD
GOLDEN, CO 80401 | **UST LUST LTANKS** | **U003240897 N/A**

Relative: Lower

Actual: 5787 ft.

LUST:

Name:	JEFFERSON COUNTY MAINTENANCE CENTER
Address:	15725 S OLD GOLDEN RD
City,State,Zip:	GOLDEN, CO 80401
Facility Id:	5211
Status:	**Closed**
Event ID:	5343
Confirmed Release:	08/19/1991
Contact Name:	Technical Assistance Line
Contact Phone:	303-318-8547
Contact Email:	Not reported
Latitude Degrees:	39.734016
Longitude Degrees:	-105.177086

Click here for COSTIS:

LTANKS:

Facility ID:	5211
Name:	JEFFERSON COUNTY MAINTENANCE CENTER
Address:	15725 S OLD GOLDEN RD
City,State,Zip:	GOLDEN, CO 80401
NFA Type:	Pre-RBCA
Status:	Closed
Event ID:	5343
Release Date:	08/19/1991
Closed Date:	10/10/1991
Contact:	Edgar Ethington
Phone:	(303) 318-8547
Email:	cdle_ops_public_record_center@state.co.us
Release Source:	Not reported
Release Cause:	Not reported
Reimbursement Total:	Not reported
Release Number:	REL-007005
URL:	https://socgov18.force.com/s/release/a183h000003KX4x

UST:

Tank Tag:	5211-1
Substance:	GSLN
Name:	JEFFERSON COUNTY MAINTENANCE CENTER
Address:	15725 S OLD GOLDEN RD
City,State,Zip:	GOLDEN 80401
Tank Tag:	5211-1
Substance:	GSLN
Facility ID:	5211
Owner Name:	Jefferson County Community Center
Owner Address:	7456 W 5th Ave, Lakewood, CO 80226
Owner City:	Lakewood
Owner State:	CO
Owner Zip:	80226
Facility Type:	Non-Retail
Facility Category:	State/Local Government
Capacity:	1000

JEFFERSON COUNTY MAINTENANCE CENTER (Continued) **U003240897**

Date Closed: 07/01/1991
Tank Status: Permanently Closed
Date Tank Installed: 06/28/1983
Tank Type: UST
Latitude: 39.734016
Longitude: -105.177086
Tank Material: Asphalt Coated or Bare Steel
Tank Wall Type: Not reported
Piping Type: Other
Piping System: Not reported
Piping Material: Galvanized Steel
Piping Wall Type: None
Overfill Prevention: Not reported
Tank ID: a1J3h000001jiPB
Account Name: ACCT-06062

Tank Tag: 5211-2
Substance: GSLN
Name: JEFFERSON COUNTY MAINTENANCE CENTER
Address: 15725 S OLD GOLDEN RD
City,State,Zip: GOLDEN 80401
Tank Tag: 5211-2
Substance: GSLN
Facility ID: 5211
Owner Name: Jefferson County Community Center
Owner Address: 7456 W 5th Ave, Lakewood, CO 80226
Owner City: Lakewood
Owner State: CO
Owner Zip: 80226
Facility Type: Non-Retail
Facility Category: State/Local Government
Capacity: 1000
Date Closed: 07/01/1991
Tank Status: Permanently Closed
Date Tank Installed: 06/28/1983
Tank Type: UST
Latitude: 39.734016
Longitude: -105.177086
Tank Material: Asphalt Coated or Bare Steel
Tank Wall Type: Not reported
Piping Type: Other
Piping System: Not reported
Piping Material: Galvanized Steel
Piping Wall Type: None
Overfill Prevention: Not reported
Tank ID: a1J3h000001jiPC
Account Name: ACCT-06062

Tank Tag: 5211-3
Substance: USEDOIL
Name: JEFFERSON COUNTY MAINTENANCE CENTER
Address: 15725 S OLD GOLDEN RD
City,State,Zip: GOLDEN 80401
Tank Tag: 5211-3
Substance: USEDOIL
Facility ID: 5211
Owner Name: Jefferson County Community Center

JEFFERSON COUNTY MAINTENANCE CENTER (Continued) **U003240897**

Owner Address:	7456 W 5th Ave, Lakewood, CO 80226
Owner City:	Lakewood
Owner State:	CO
Owner Zip:	80226
Facility Type:	Non-Retail
Facility Category:	State/Local Government
Capacity:	Not reported
Date Closed:	08/01/1991
Tank Status:	Permanently Closed
Date Tank Installed:	06/27/1986
Tank Type:	UST
Latitude:	39.734016
Longitude:	-105.177086
Tank Material:	Unknown
Tank Wall Type:	Not reported
Piping Type:	Other
Piping System:	Not reported
Piping Material:	Unknown
Piping Wall Type:	None
Overfill Prevention:	Not reported
Tank ID:	a1J3h000001jiPD
Account Name:	ACCT-06062

16
SE
1/4-1/2
0.327 mi.
1729 ft.

Relative:
Higher

Actual:
5850 ft.

PLANET HONDA
15601 W COLFAX
GOLDEN, CO 80401

RCRA-VSQG **1000386690**
US AIRS **N/A**
UST
AIRS
LUST
SHWF
LTANKS

RCRA Listings:

Date Form Received by Agency:	19990726
Handler Name:	Planet Honda
Handler Address:	W Colfax
Handler City,State,Zip:	GOLDEN, CO 80401
EPA ID:	COD981545122
Contact Name:	RONALD H REICHERT
Contact Address:	15601 W COLFAX
Contact City,State,Zip:	GOLDEN, CO 80401
Contact Telephone:	303-279-7707
Contact Fax:	Not reported
Contact Email:	Not reported
Contact Title:	Not reported
EPA Region:	08
Land Type:	Private
Federal Waste Generator Description:	Conditionally Exempt Small Quantity Generator
Non-Notifier:	Not reported
Biennial Report Cycle:	Not reported
Accessibility:	Not reported
Active Site Indicator:	Handler Activities
State District Owner:	Not reported
State District:	Not reported
Mailing Address:	W COLFAX
Mailing City,State,Zip:	GOLDEN, CO 80401
Owner Name:	Carmac Inc
Owner Type:	Other
Operator Name:	Not reported

PLANET HONDA (Continued) **1000386690**

Operator Type: Not reported
Short-Term Generator Activity: No
Importer Activity: No
Mixed Waste Generator: No
Transporter Activity: No
Transfer Facility Activity: No
Recycler Activity with Storage: No
Small Quantity On-Site Burner Exemption: No
Smelting Melting and Refining Furnace Exemption: No
Underground Injection Control: No
Off-Site Waste Receipt: No
Universal Waste Indicator: No
Universal Waste Destination Facility: No
Federal Universal Waste: No
Active Site State-Reg Handler: ---
Federal Facility Indicator: Not reported
Hazardous Secondary Material Indicator: N
Sub-Part K Indicator: Not reported
2018 GPRA Permit Baseline: Not on the Baseline
2018 GPRA Renewals Baseline: Not on the Baseline
202 GPRA Corrective Action Baseline: No
Subject to Corrective Action Universe: No
Non-TSDFs Where RCRA CA has Been Imposed Universe: No
Corrective Action Priority Ranking: No NCAPS ranking
Environmental Control Indicator: No
Institutional Control Indicator: No
Human Exposure Controls Indicator: N/A
Groundwater Controls Indicator: N/A
Significant Non-Complier Universe: No
Unaddressed Significant Non-Complier Universe: No
Addressed Significant Non-Complier Universe: No
Significant Non-Complier With a Compliance Schedule Universe: No
Financial Assurance Required: Not reported
Handler Date of Last Change: 20000915
Recognized Trader-Importer: No
Recognized Trader-Exporter: No
Importer of Spent Lead Acid Batteries: No
Exporter of Spent Lead Acid Batteries: No
Recycler Activity Without Storage: No
Manifest Broker: No
Sub-Part P Indicator: No

Hazardous Waste Summary:
Waste Code: D001
Waste Description: Ignitable Waste

Handler - Owner Operator:
Owner/Operator Indicator: Owner
Owner/Operator Name: CARMAC INC
Legal Status: Other
Date Became Current: Not reported
Date Ended Current: Not reported
Owner/Operator Address: 15601 W COLFAX AVE
Owner/Operator City,State,Zip: GOLDEN, CO 80401
Owner/Operator Telephone: 303-232-2200

PLANET HONDA (Continued) **1000386690**

Owner/Operator Telephone Ext: Not reported
Owner/Operator Fax: Not reported
Owner/Operator Email: Not reported

Historic Generators:
Receive Date: 19990726
Handler Name: PLANET HONDA
Federal Waste Generator Description: Conditionally Exempt Small Quantity Generator
State District Owner: Not reported
Large Quantity Handler of Universal Waste: No
Recognized Trader Importer: No
Recognized Trader Exporter: No
Spent Lead Acid Battery Importer: No
Spent Lead Acid Battery Exporter: No
Current Record: Yes
Non Storage Recycler Activity: Not reported
Electronic Manifest Broker: Not reported

List of NAICS Codes and Descriptions:
NAICS Codes: No NAICS Codes Found

Has the Facility Received Notices of Violations:
Found Violation: No
Agency Which Determined Violation: Not reported
Violation Short Description: Not reported
Date Violation was Determined: Not reported
Actual Return to Compliance Date: Not reported
Return to Compliance Qualifier: Not reported
Violation Responsible Agency: Not reported
Scheduled Compliance Date: Not reported
Enforcement Identifier: Not reported
Date of Enforcement Action: Not reported
Enforcement Responsible Agency: Not reported
Enforcement Docket Number: Not reported
Enforcement Attorney: Not reported
Corrective Action Component: Not reported
Appeal Initiated Date: Not reported
Appeal Resolution Date: Not reported
Disposition Status Date: Not reported
Disposition Status: Not reported
Disposition Status Description: Not reported
Consent/Final Order Sequence Number: Not reported
Consent/Final Order Respondent Name: Not reported
Consent/Final Order Lead Agency: Not reported
Enforcement Type: Not reported
Enforcement Responsible Person: Not reported
Enforcement Responsible Sub-Organization: Not reported
SEP Sequence Number: Not reported
SEP Expenditure Amount: Not reported
SEP Scheduled Completion Date: Not reported
SEP Actual Date: Not reported
SEP Defaulted Date: Not reported
SEP Type: Not reported
SEP Type Description: Not reported
Proposed Amount: Not reported
Final Monetary Amount: Not reported

PLANET HONDA (Continued) **1000386690**

Paid Amount: Not reported
Final Count: Not reported
Final Amount: Not reported

Evaluation Action Summary:
Evaluation Date: 19990526
Evaluation Responsible Agency: State
Found Violation: No
Evaluation Type Description: COMPLIANCE EVALUATION INSPECTION
Evaluation Responsible Person Identifier: COJWI
Evaluation Responsible Sub-Organization: S
Actual Return to Compliance Date: Not reported
Scheduled Compliance Date: Not reported
Date of Request: Not reported
Date Response Received: Not reported
Request Agency: Not reported
Former Citation: Not reported

SHWF:
Location ID: JFR122
Facility ID: JFR122
Name: PLANET HYUNDAI
Address: 15601 W COLFAX AVENUE
City,State,Zip: GOLDEN, CO 80401
Activity Type: Generator of Motor Vehicle and Trailer Waste Tires
Contact Organization: Not reported
Contact Address: Not reported
Contact City,State,Zip: Not reported
Contact Phone: Not reported
Activity Status: Not reported
Facility Status: Not reported
Commercial Status: False
Government Facility Status: N/A
Title: Not reported
Post Closure Unit: False
Post Closure Ended: False
Closure Units: False
Clean Closed Units: False
Latitude: 39.729858
Longitude: -105.175003

LUST:
Name: PLANET HONDA
Address: 15601 W COLFAX AVE
City,State,Zip: GOLDEN, CO 80401
Facility Id: 3677
Status: Closed
Event ID: 9822
Confirmed Release: 07/01/2005
Contact Name: Technical Assistance Line
Contact Phone: 303-318-8547
Contact Email: Not reported
Latitude Degrees: 39.730433
Longitude Degrees: -105.175506

PLANET HONDA (Continued) **1000386690**

Click here for COSTIS:

LTANKS:

Facility ID:	3677
Name:	PLANET HYUNDAI
Address:	15601 W COLFAX AVE
City,State,Zip:	GOLDEN, CO 80401
NFA Type:	Tier I
Status:	Closed
Event ID:	9822
Release Date:	07/01/2005
Closed Date:	12/09/2005
Contact:	Tina Sandoval
Phone:	(303) 318-8547
Email:	cdle_ops_public_record_center@state.co.us
Release Source:	Line - connections
Release Cause:	Not reported
Reimbursement Total:	Not reported
Release Number:	REL-009440
URL:	https://socgov18.force.com/s/release/a183h000003KXiE

UST:

Tank Tag:	3677-1
Substance:	RUL
Name:	PLANET HYUNDAI
Address:	15601 W COLFAX AVE
City,State,Zip:	GOLDEN 80401
Tank Tag:	3677-1
Substance:	RUL
Facility ID:	3677
Owner Name:	Golden Automotive Group Holdings LLC
Owner Address:	15601 W Colfax Ave, Golden, CO 80401
Owner City:	Golden
Owner State:	CO
Owner Zip:	80401
Facility Type:	Non-Retail
Facility Category:	Commercial/Industrial
Capacity:	2550
Date Closed:	Not reported
Tank Status:	Currently In Use
Date Tank Installed:	10/01/1986
Tank Type:	UST
Latitude:	39.730433
Longitude:	-105.175506
Tank Material:	FRP: Fiberglass Reinforced Plastic
Tank Wall Type:	Not reported
Piping Type:	UG: Underground
Piping System:	Not reported
Piping Material:	FRP: Fiberglass Reinforced Plastic
Piping Wall Type:	None
Overfill Prevention:	AL: External Aud/Vis Alarm
Tank ID:	a1J3h000001jiB7
Account Name:	ACCT-02620

Tank Tag:	3677-2
Substance:	USEDOIL

PLANET HONDA (Continued) **1000386690**

Name: PLANET HYUNDAI
Address: 15601 W COLFAX AVE
City,State,Zip: GOLDEN 80401
Tank Tag: 3677-2
Substance: USEDOIL
Facility ID: 3677
Owner Name: Golden Automotive Group Holdings LLC
Owner Address: 15601 W Colfax Ave, Golden, CO 80401
Owner City: Golden
Owner State: CO
Owner Zip: 80401
Facility Type: Non-Retail
Facility Category: Commercial/Industrial
Capacity: 1000
Date Closed: Not reported
Tank Status: Currently In Use
Date Tank Installed: 10/01/1986
Tank Type: UST
Latitude: 39.730433
Longitude: -105.175506
Tank Material: FRP: Fiberglass Reinforced Plastic
Tank Wall Type: Not reported
Piping Type: UG: Underground
Piping System: Not reported
Piping Material: FRP: Fiberglass Reinforced Plastic
Piping Wall Type: None
Overfill Prevention: NA: Not Required
Tank ID: a1J3h000001jiB8
Account Name: ACCT-02620

US AIRS MINOR:
Envid: 1000386690
Region Code: 08
Programmatic ID: AIR CO0000000805900333
Facility Registry ID: 110009560698
D and B Number: Not reported
Primary SIC Code: 7538
NAICS Code: 811111
Default Air Classification Code: MIN
Facility Type of Ownership Code: NON
Air CMS Category Code: Not reported
HPV Status: Not reported

AIRS:
Name: CLASSIC HONDA INC
Address: 15601 W COLFAX AVE
City,State,Zip: WEST PLEASANT VIEW, CO 80401
County/Plant ID: 059-0333
Contact Name: RONALD REICHERT
Contact Telephone: (303)279-7707
SIC Primary: 7538
NAICS Primary: 811111
Facility Status: Permanently Closed
Latitude: 394348.71
Longitude: 1051037.72

PLANET HONDA (Continued) **1000386690**

Poll:
Site ID: 059-0333
Full Pollutant Name: VOLATILE ORGANIC COMPOUNDS
Site-wide Estimated Emissions: 0
Site-wide Estimated Emissions Units: TY

Unit:
Site ID: 059-0333
Permit Number: Not reported
Unique Emission Unit ID: 001
Emission Unit Description: SAFETY KLEEN DEGREASER.CN

E17 **HI PERFORMANCE CAR WASH** **LTANKS** **S125420150**
East **15610 S GOLDEN RD** **N/A**
1/4-1/2 **GOLDEN, CO 80401**
0.351 mi.
1852 ft. **Site 1 of 3 in cluster E**

Relative:
Lower
Actual:
5789 ft.

LTANKS:
Facility ID: 11864
Name: HI PERFORMANCE CAR WASH
Address: 15610 S GOLDEN RD
City,State,Zip: GOLDEN, CO 80401
NFA Type: Pre-RBCA
Status: Closed
Event ID: 2945
Release Date: Not reported
Closed Date: 12/28/1990
Contact: Larry Delin
Phone: (303) 318-8547
Email: cdle_ops_public_record_center@state.co.us
Release Source: Not reported
Release Cause: Not reported
Reimbursement Total: Not reported
Release Number: REL-006654
URL: https://socgov18.force.com/s/release/a183h000003KWzI

---

18 **SERVICE STATION** **LTANKS** **S121703828**
NW **16650 S GOLDEN RD** **N/A**
1/4-1/2 **GOLDEN, CO 80401**
0.351 mi.
1854 ft.

Relative:
Higher
Actual:
5831 ft.

LTANKS:
Facility ID: 12184
Name: SERVICE STATION
Address: 16650 S GOLDEN RD
City,State,Zip: GOLDEN, CO 80401
NFA Type: Pre-RBCA
Status: Closed
Event ID: 4913
Release Date: 08/26/1992
Closed Date: 08/28/1995
Contact: Cindy Silva-Burbach

SERVICE STATION (Continued) **S121703828**

Phone: (303) 318-8547
Email: cdle_ops_public_record_center@state.co.us
Release Source: Not reported
Release Cause: Not reported
Reimbursement Total: Not reported
Release Number: REL-010494
URL: https://socgov18.force.com/s/release/a183h000003KXzE

---

19 East 1/4-1/2 0.363 mi. 1916 ft. | **PLEASANT VIEW PCE** | **SEMS-ARCHIVE** | **1001404265**
NEAR 10TH AND LOVELAND STREET | **N/A**
GOLDEN, CO 80401

Relative: Lower
Actual: 5799 ft.

SEMS Archive:
Site ID: 0801690
EPA ID: COSFN0801690
Name: PLEASANT VIEW PCE
Address: NEAR 10TH AND LOVELAND STREET
Address 2: Not reported
City,State,Zip: GOLDEN, CO 80401
Cong District: Not reported
FIPS Code: 08059
FF: N
NPL: Not on the NPL
Non NPL Status: NFRAP-Site does not qualify for the NPL based on existing information

SEMS Archive Detail:
Region: 08
Site ID: 0801690
EPA ID: COSFN0801690
Site Name: PLEASANT VIEW PCE
NPL: N
FF: N
OU: 00
Action Code: ES
Action Name: ESI
SEQ: 1
Start Date: 2001-08-30 04:00:00
Finish Date: 2002-05-09 04:00:00
Qual: L
Current Action Lead: St Perf

Region: 08
Site ID: 0801690
EPA ID: COSFN0801690
Site Name: PLEASANT VIEW PCE
NPL: N
FF: N
OU: 00
Action Code: RV
Action Name: RMVL
SEQ: 1
Start Date: 1999-04-22 04:00:00
Finish Date: 1999-05-28 04:00:00
Qual: S
Current Action Lead: EPA Perf

PLEASANT VIEW PCE (Continued) **1001404265**

Region: 08
Site ID: 0801690
EPA ID: COSFN0801690
Site Name: PLEASANT VIEW PCE
NPL: N
FF: N
OU: 00
Action Code: PA
Action Name: PA
SEQ: 1
Start Date: Not reported
Finish Date: 1999-02-16 05:00:00
Qual: H
Current Action Lead: St Perf

Region: 08
Site ID: 0801690
EPA ID: COSFN0801690
Site Name: PLEASANT VIEW PCE
NPL: N
FF: N
OU: 00
Action Code: DS
Action Name: DISCVRY
SEQ: 1
Start Date: 1998-11-20 05:00:00
Finish Date: 1998-11-20 05:00:00
Qual: Not reported
Current Action Lead: EPA Perf

Region: 08
Site ID: 0801690
EPA ID: COSFN0801690
Site Name: PLEASANT VIEW PCE
NPL: N
FF: N
OU: 00
Action Code: SI
Action Name: SI
SEQ: 1
Start Date: 1999-02-16 05:00:00
Finish Date: 1999-12-23 05:00:00
Qual: H
Current Action Lead: St Perf

Region: 08
Site ID: 0801690
EPA ID: COSFN0801690
Site Name: PLEASANT VIEW PCE
NPL: N
FF: N
OU: 00
Action Code: VS
Action Name: ARCH SITE
SEQ: 1
Start Date: Not reported
Finish Date: 2004-03-05 05:00:00

PLEASANT VIEW PCE (Continued) **1001404265**

Qual: Not reported
Current Action Lead: EPA Perf In-Hse

E20 East 1/4-1/2 0.376 mi. 1987 ft. **CSP - GOLDEN #49611** **UST** **U003240512**
1096 MCINTYRE ST **LTANKS** **N/A**
GOLDEN, CO 80401

Site 2 of 3 in cluster E

Relative: Lower
Actual: 5784 ft.

LTANKS:

Facility ID:	2660
Name:	CSP - GOLDEN #49611
Address:	1096 MCINTYRE ST
City,State,Zip:	GOLDEN, CO 80401
NFA Type:	Tier II
Status:	Closed
Event ID:	8134
Release Date:	11/29/1995
Closed Date:	04/14/2008
Contact:	Mike Kwiecinski
Phone:	(303) 318-8547
Email:	cdle_ops_public_record_center@state.co.us
Release Source:	Historical contamination
Release Cause:	Not reported
Reimbursement Total:	Not reported
Release Number:	REL-002447
URL:	https://socgov18.force.com/s/release/a183h000003KVtR

UST:

Tank Tag:	2660-2
Substance:	DSL
Name:	CSP - GOLDEN #49611
Address:	1096 MCINTYRE ST
City,State,Zip:	GOLDEN 80401
Tank Tag:	2660-2
Substance:	DSL
Facility ID:	2660
Owner Name:	Colorado State Patrol
Owner Address:	4201 E Arkansas Ave, Denver, CO 80222
Owner City:	Denver
Owner State:	CO
Owner Zip:	80222
Facility Type:	Non-Retail
Facility Category:	State/Local Government
Capacity:	4000
Date Closed:	11/01/1995
Tank Status:	Permanently Closed
Date Tank Installed:	05/06/1976
Tank Type:	UST
Latitude:	39.733845
Longitude:	-105.174866
Tank Material:	Asphalt Coated or Bare Steel
Tank Wall Type:	Not reported
Piping Type:	UG: Underground
Piping System:	Not reported
Piping Material:	Galvanized Steel

CSP - GOLDEN #49611 (Continued) **U003240512**

Piping Wall Type: None
Overfill Prevention: Not reported
Tank ID: a1J3h000001juCi
Account Name: ACCT-04093

Tank Tag: 2660-1
Substance: GSLN
Name: CSP - GOLDEN #49611
Address: 1096 MCINTYRE ST
City,State,Zip: GOLDEN 80401
Tank Tag: 2660-1
Substance: GSLN
Facility ID: 2660
Owner Name: Colorado State Patrol
Owner Address: 4201 E Arkansas Ave, Denver, CO 80222
Owner City: Denver
Owner State: CO
Owner Zip: 80222
Facility Type: Non-Retail
Facility Category: State/Local Government
Capacity: 10000
Date Closed: 11/01/1995
Tank Status: Permanently Closed
Date Tank Installed: 05/01/1976
Tank Type: UST
Latitude: 39.733845
Longitude: -105.174866
Tank Material: Unknown
Tank Wall Type: Not reported
Piping Type: UG: Underground
Piping System: Not reported
Piping Material: Bare Steel
Piping Wall Type: None
Overfill Prevention: Not reported
Tank ID: a1J3h000001juCh
Account Name: ACCT-04093

E21 **CSP - CAMP GEORGE WEST** **LUST** **S118892437**
East **1096 MCINTYRE ST** **N/A**
1/4-1/2 **GOLDEN, CO 80401**
0.376 mi.
1987 ft. **Site 3 of 3 in cluster E**

Relative:
Lower

Actual:
5784 ft.

LUST:
Name: CSP - CAMP GEORGE WEST
Address: 1096 MCINTYRE ST
City,State,Zip: GOLDEN, CO 80401
Facility Id: 2660
Status: **Closed**
Event ID: 8134
Confirmed Release: 11/29/1995
Contact Name: Mike Kwiecinski
Contact Phone: 303-318-8512
Contact Email: Not reported
Latitude Degrees: 39.733845
Longitude Degrees: -105.174866

CSP - CAMP GEORGE WEST (Continued) **S118892437**

Click here for COSTIS:

---

22 ESE 1/4-1/2 0.414 mi. 2187 ft.

880-890 MCINTYRE ST
880-890 MCINTYRE ST
GOLDEN, CO 80403

VCP **S116165678**
N/A

Relative: Higher
Actual: 5818 ft.

VCP:

Name:	880-890 MCINTYRE ST
Address:	880-890 MCINTYRE ST
City,State,Zip:	GOLDEN, CO 80403
Application Type:	NAD
Actual Review Date:	11/20/2013
Application Status:	Not reported
File Number:	RV 131022-1
Project Active:	inactive
Site Number:	621
Rem Start Due Date:	01/01/1900
Rem Comp Due Date:	01/01/1900
Actual Cost:	$0.00
Rebate:	$0.00
Tax Credit:	$0.00
Acreage:	1
Jobs:	12
Other Issues and Comments:	Not reported
Received Date:	10/22/2013
Review Due Date:	12/06/2013
Extension:	0
Land Use - Zoning:	COMMERCIAL
Media Sediment:	Not reported
Media Soil:	Not reported
Media Ground Water:	PCE
Media Surface Water:	Not reported

---

23 ESE 1/4-1/2 0.476 mi. 2513 ft.

BAJWA BROTHERS LLC
15495 W COLFAX AVE
GOLDEN, CO 80401

UST **U003748769**
LUST **N/A**
LTANKS

Relative: Lower
Actual: 5813 ft.

LUST:

Name:	SINCLAIR 5014
Address:	15495 W COLFAX AVE
City,State,Zip:	GOLDEN, CO 80401
Facility Id:	8240
Status:	**Closed**
Event ID:	1711
Confirmed Release:	11/29/1991
Contact Name:	Technical Assistance Line
Contact Phone:	303-318-8547
Contact Email:	Not reported
Latitude Degrees:	39.730509
Longitude Degrees:	-105.173294

BAJWA BROTHERS LLC (Continued) **U003748769**

Click here for COSTIS:

LTANKS:

Facility ID:	8240
Name:	BAJWA BROTHERS LLC
Address:	15495 W COLFAX AVE
City,State,Zip:	GOLDEN, CO 80401
NFA Type:	Tier II
Status:	Closed
Event ID:	1711
Release Date:	11/29/1991
Closed Date:	07/29/2004
Contact:	John Gould
Phone:	(303) 318-8547
Email:	cdle_ops_public_record_center@state.co.us
Release Source:	Not reported
Release Cause:	Not reported
Reimbursement Total:	Not reported
Release Number:	REL-010834
URL:	https://socgov18.force.com/s/release/a183h000003KY4i

UST:

Tank Tag:	8240-7
Substance:	PUL
Name:	BAJWA BROTHERS LLC
Address:	15495 W COLFAX AVE
City,State,Zip:	GOLDEN 80401
Tank Tag:	8240-7
Substance:	PUL
Facility ID:	8240
Owner Name:	Bajwa Brothers LLC
Owner Address:	15495 W Colfax Ave, Golden, CO 80401
Owner City:	Golden
Owner State:	CO
Owner Zip:	80401
Facility Type:	Retail
Facility Category:	Retail Gas Station
Capacity:	8000
Date Closed:	Not reported
Tank Status:	Currently In Use
Date Tank Installed:	01/08/1993
Tank Type:	UST
Latitude:	39.730509
Longitude:	-105.173294
Tank Material:	FRP: Fiberglass Reinforced Plastic
Tank Wall Type:	Not reported
Piping Type:	UG: Underground
Piping System:	Not reported
Piping Material:	FRP: Fiberglass Reinforced Plastic
Piping Wall Type:	Double-Walled
Overfill Prevention:	FV: Fill Tube Valve
Tank ID:	a1J3h000001jnYA
Account Name:	ACCT-05284

Tank Tag:	8240-6
Substance:	RUL

BAJWA BROTHERS LLC (Continued) **U003748769**

Name:	BAJWA BROTHERS LLC
Address:	15495 W COLFAX AVE
City,State,Zip:	GOLDEN 80401
Tank Tag:	8240-6
Substance:	RUL
Facility ID:	8240
Owner Name:	Bajwa Brothers LLC
Owner Address:	15495 W Colfax Ave, Golden, CO 80401
Owner City:	Golden
Owner State:	CO
Owner Zip:	80401
Facility Type:	Retail
Facility Category:	Retail Gas Station
Capacity:	10000
Date Closed:	Not reported
Tank Status:	Currently In Use
Date Tank Installed:	01/08/1993
Tank Type:	UST
Latitude:	39.730509
Longitude:	-105.173294
Tank Material:	FRP: Fiberglass Reinforced Plastic
Tank Wall Type:	Not reported
Piping Type:	UG: Underground
Piping System:	Not reported
Piping Material:	FRP: Fiberglass Reinforced Plastic
Piping Wall Type:	Double-Walled
Overfill Prevention:	BF: Ball Float Valve
Tank ID:	a1J3h000001jnY9
Account Name:	ACCT-05284

Tank Tag:	8240-8
Substance:	DSL
Name:	BAJWA BROTHERS LLC
Address:	15495 W COLFAX AVE
City,State,Zip:	GOLDEN 80401
Tank Tag:	8240-8
Substance:	DSL
Facility ID:	8240
Owner Name:	Bajwa Brothers LLC
Owner Address:	15495 W Colfax Ave, Golden, CO 80401
Owner City:	Golden
Owner State:	CO
Owner Zip:	80401
Facility Type:	Retail
Facility Category:	Retail Gas Station
Capacity:	8000
Date Closed:	Not reported
Tank Status:	Currently In Use
Date Tank Installed:	01/08/1993
Tank Type:	UST
Latitude:	39.730509
Longitude:	-105.173294
Tank Material:	FRP: Fiberglass Reinforced Plastic
Tank Wall Type:	Not reported
Piping Type:	UG: Underground
Piping System:	Not reported
Piping Material:	FRP: Fiberglass Reinforced Plastic

BAJWA BROTHERS LLC (Continued) **U003748769**

Piping Wall Type:	Double-Walled
Overfill Prevention:	BF: Ball Float Valve
Tank ID:	a1J3h000001jnYB
Account Name:	ACCT-05284

Tank Tag:	8240-1
Substance:	GSLN
Name:	BAJWA BROTHERS LLC
Address:	15495 W COLFAX AVE
City,State,Zip:	GOLDEN 80401
Tank Tag:	8240-1
Substance:	GSLN
Facility ID:	8240
Owner Name:	Bajwa Brothers LLC
Owner Address:	15495 W Colfax Ave, Golden, CO 80401
Owner City:	Golden
Owner State:	CO
Owner Zip:	80401
Facility Type:	Retail
Facility Category:	Retail Gas Station
Capacity:	5000
Date Closed:	10/07/1993
Tank Status:	Permanently Closed
Date Tank Installed:	04/04/1968
Tank Type:	UST
Latitude:	39.730509
Longitude:	-105.173294
Tank Material:	Asphalt Coated or Bare Steel
Tank Wall Type:	Not reported
Piping Type:	Other
Piping System:	Not reported
Piping Material:	Galvanized Steel
Piping Wall Type:	None
Overfill Prevention:	Not reported
Tank ID:	a1J3h000001jnY4
Account Name:	ACCT-05284

Tank Tag:	8240-2
Substance:	GSLN
Name:	BAJWA BROTHERS LLC
Address:	15495 W COLFAX AVE
City,State,Zip:	GOLDEN 80401
Tank Tag:	8240-2
Substance:	GSLN
Facility ID:	8240
Owner Name:	Bajwa Brothers LLC
Owner Address:	15495 W Colfax Ave, Golden, CO 80401
Owner City:	Golden
Owner State:	CO
Owner Zip:	80401
Facility Type:	Retail
Facility Category:	Retail Gas Station
Capacity:	5000
Date Closed:	10/07/1993
Tank Status:	Permanently Closed
Date Tank Installed:	04/04/1968
Tank Type:	UST

BAJWA BROTHERS LLC (Continued) **U003748769**

Latitude:	39.730509
Longitude:	-105.173294
Tank Material:	Asphalt Coated or Bare Steel
Tank Wall Type:	Not reported
Piping Type:	Other
Piping System:	Not reported
Piping Material:	Galvanized Steel
Piping Wall Type:	None
Overfill Prevention:	Not reported
Tank ID:	a1J3h000001jnY5
Account Name:	ACCT-05284

Tank Tag:	8240-3
Substance:	GSLN
Name:	BAJWA BROTHERS LLC
Address:	15495 W COLFAX AVE
City,State,Zip:	GOLDEN 80401
Tank Tag:	8240-3
Substance:	GSLN
Facility ID:	8240
Owner Name:	Bajwa Brothers LLC
Owner Address:	15495 W Colfax Ave, Golden, CO 80401
Owner City:	Golden
Owner State:	CO
Owner Zip:	80401
Facility Type:	Retail
Facility Category:	Retail Gas Station
Capacity:	5000
Date Closed:	10/07/1993
Tank Status:	Permanently Closed
Date Tank Installed:	04/04/1968
Tank Type:	UST
Latitude:	39.730509
Longitude:	-105.173294
Tank Material:	Asphalt Coated or Bare Steel
Tank Wall Type:	Not reported
Piping Type:	Other
Piping System:	Not reported
Piping Material:	Galvanized Steel
Piping Wall Type:	None
Overfill Prevention:	Not reported
Tank ID:	a1J3h000001jnY6
Account Name:	ACCT-05284

Tank Tag:	8240-4
Substance:	GSLN
Name:	BAJWA BROTHERS LLC
Address:	15495 W COLFAX AVE
City,State,Zip:	GOLDEN 80401
Tank Tag:	8240-4
Substance:	GSLN
Facility ID:	8240
Owner Name:	Bajwa Brothers LLC
Owner Address:	15495 W Colfax Ave, Golden, CO 80401
Owner City:	Golden
Owner State:	CO
Owner Zip:	80401

BAJWA BROTHERS LLC (Continued) **U003748769**

Facility Type:	Retail
Facility Category:	Retail Gas Station
Capacity:	5000
Date Closed:	10/07/1993
Tank Status:	Permanently Closed
Date Tank Installed:	04/04/1968
Tank Type:	UST
Latitude:	39.730509
Longitude:	-105.173294
Tank Material:	Asphalt Coated or Bare Steel
Tank Wall Type:	Not reported
Piping Type:	Other
Piping System:	Not reported
Piping Material:	Galvanized Steel
Piping Wall Type:	None
Overfill Prevention:	Not reported
Tank ID:	a1J3h000001jnY7
Account Name:	ACCT-05284

Tank Tag:	8240-5
Substance:	USEDOIL
Name:	BAJWA BROTHERS LLC
Address:	15495 W COLFAX AVE
City,State,Zip:	GOLDEN 80401
Tank Tag:	8240-5
Substance:	USEDOIL
Facility ID:	8240
Owner Name:	Bajwa Brothers LLC
Owner Address:	15495 W Colfax Ave, Golden, CO 80401
Owner City:	Golden
Owner State:	CO
Owner Zip:	80401
Facility Type:	Retail
Facility Category:	Retail Gas Station
Capacity:	560
Date Closed:	Not reported
Tank Status:	Permanently Closed
Date Tank Installed:	04/04/1968
Tank Type:	UST
Latitude:	39.730509
Longitude:	-105.173294
Tank Material:	Asphalt Coated or Bare Steel
Tank Wall Type:	Not reported
Piping Type:	Other
Piping System:	Not reported
Piping Material:	Galvanized Steel
Piping Wall Type:	None
Overfill Prevention:	Not reported
Tank ID:	a1J3h000001jnY8
Account Name:	ACCT-05284

24 ESE 1/4-1/2 0.480 mi. 2537 ft. | **U-HAUL MOVING & STORAGE OF GOLDEN**
15500 W COLFAX AVE
GOLDEN, CO 80401 | **UST LUST LTANKS AST** | **U003550229 N/A**

Relative: Higher

Actual: 5822 ft.

LTANKS:

Facility ID:	1017
Name:	U-HAUL MOVING & STORAGE OF GOLDEN
Address:	15500 W COLFAX AVE
City,State,Zip:	GOLDEN, CO 80401
NFA Type:	Pre-RBCA
Status:	Closed
Event ID:	4723
Release Date:	10/21/1991
Closed Date:	05/23/1996
Contact:	Ed Larock
Phone:	(303) 318-8547
Email:	cdle_ops_public_record_center@state.co.us
Release Source:	Not reported
Release Cause:	Not reported
Reimbursement Total:	Not reported
Release Number:	REL-012054
URL:	https://socgov18.force.com/s/release/a183h000003KYOO

LUST:

Name:	U-HAUL CO OF COLORADO INC
Address:	15500 W COLFAX AVE
City,State,Zip:	GOLDEN, CO 80401
Facility Id:	1017
Status:	**Closed**
Event ID:	4723
Confirmed Release:	10/21/1991
Contact Name:	Technical Assistance Line
Contact Phone:	303-318-8547
Contact Email:	Not reported
Latitude Degrees:	39.729673
Longitude Degrees:	-105.173454

Click here for COSTIS:

UST:

Tank Tag:	1017-2
Substance:	USEDOIL
Name:	U-HAUL MOVING & STORAGE OF GOLDEN
Address:	15500 W COLFAX AVE
City,State,Zip:	GOLDEN 80401
Tank Tag:	1017-2
Substance:	USEDOIL
Facility ID:	1017
Owner Name:	U-Haul International Inc
Owner Address:	PO Box 21505, Phoenix, AZ 85036
Owner City:	Phoenix
Owner State:	AZ
Owner Zip:	85036
Facility Type:	Non-Retail
Facility Category:	LPG Only
Capacity:	560

U-HAUL MOVING & STORAGE OF GOLDEN (Continued) **U003550229**

Date Closed:	12/31/1992
Tank Status:	Permanently Closed
Date Tank Installed:	Not reported
Tank Type:	UST
Latitude:	39.729673
Longitude:	-105.173454
Tank Material:	Asphalt Coated or Bare Steel
Tank Wall Type:	Not reported
Piping Type:	UG: Underground
Piping System:	Not reported
Piping Material:	Galvanized Steel
Piping Wall Type:	None
Overfill Prevention:	Not reported
Tank ID:	a1J3h000001js3L
Account Name:	ACCT-11415

Tank Tag:	1017-1
Substance:	GSLN
Name:	U-HAUL MOVING & STORAGE OF GOLDEN
Address:	15500 W COLFAX AVE
City,State,Zip:	GOLDEN 80401
Tank Tag:	1017-1
Substance:	GSLN
Facility ID:	1017
Owner Name:	U-Haul International Inc
Owner Address:	PO Box 21505, Phoenix, AZ 85036
Owner City:	Phoenix
Owner State:	AZ
Owner Zip:	85036
Facility Type:	Non-Retail
Facility Category:	LPG Only
Capacity:	2000
Date Closed:	10/01/1992
Tank Status:	Permanently Closed
Date Tank Installed:	Not reported
Tank Type:	UST
Latitude:	39.729673
Longitude:	-105.173454
Tank Material:	Asphalt Coated or Bare Steel
Tank Wall Type:	Not reported
Piping Type:	Other
Piping System:	Not reported
Piping Material:	Unknown
Piping Wall Type:	None
Overfill Prevention:	Not reported
Tank ID:	a1J3h000001js3K
Account Name:	ACCT-11415

AST:

Name:	U-HAUL MOVING & STORAGE OF GOLDEN
Address:	15500 W COLFAX AVE
City,State,Zip:	GOLDEN 80401
Substance:	LPG
Tank Tag:	1017-3
Facility ID:	1017
Owner Name:	U-Haul International Inc
Owner Address:	PO Box 21505, Phoenix, AZ 85036

U-HAUL MOVING & STORAGE OF GOLDEN (Continued) **U003550229**

Owner City:	Phoenix
Owner State:	AZ
Owner Zip:	85036
Facility Type:	Non-Retail
Facility Category:	LPG Only
Capacity:	1000
Tank Status:	Currently In Use
Date Tank Installed:	01/01/2007
Date Closed:	Not reported
Tank Type:	LPG-AG
Latitude:	39.729673
Longitude:	-105.173454
Tank Material:	Not reported
Tank Wall Type:	Not reported
Piping Type:	Not reported
Piping System:	Not reported
Piping Material:	Not reported
Piping Wall Type:	Not reported
Overfill Prevention:	Not reported
Tank ID:	a1J3h000001js3M
Account Name:	ACCT-11415

---

25 **PLEASANT VIEW PCE** **BROWNFIELDS** **S128811912**
East **10TH AVENUE AND LOVELAND STREET** **N/A**
1/4-1/2 **GOLDEN, CO 80401**
0.493 mi.
2603 ft.

Relative:
Lower

Actual:
5789 ft.

BROWNFIELDS:

Name:	Pleasant View Pce
Address:	10th Avenue And Loveland Street
City,State,Zip:	GOLDEN, CO 80401
Land Use - Zoning:	Not reported
Indoor Air:	Not reported
Media Sediment:	Not reported
Media Soil:	Not reported
Media Ground Water:	Not reported
Media Surface Water:	Not reported
Acreage:	Not reported
Housing Created:	Not reported
Latitude:	39.732741
Longitude:	-105.172565
Assessor Parcel #:	Not reported
Reviews By:	0
Application Type:	1306
Public View:	True
Former Or Current Use:	Not reported
Planned Re-development:	Not reported
Other Narrative Info:	$11,734.00
Content Type:	Application
Other Issues and Comments:	Not reported
Legal Description:	Not reported
Date of Received Application:	01/01/2002
Project Status:	Completed
Date of Completion:	12/31/2002
Applicant:	Not reported

26 North 1/4-1/2 0.498 mi. 2632 ft. | **SOUTH TABLE MOUNTAIN SITE**
16173 DENVER WEST PKWY
GOLDEN, CO 80401 | **SPILLS LTANKS** | **S104303003 N/A**

Relative: Higher

Actual: 5842 ft.

LTANKS:

Facility ID:	14560
Name:	SOUTH TABLE MOUNTAIN SITE
Address:	16173 DENVER WEST PKWY
City,State,Zip:	GOLDEN, CO 80401
NFA Type:	Administrative
Status:	Closed
Event ID:	6671
Release Date:	Not reported
Closed Date:	Not reported
Contact:	Joe'l Lambe
Phone:	(303) 318-8547
Email:	cdle_ops_public_record_center@state.co.us
Release Source:	Not reported
Release Cause:	Not reported
Reimbursement Total:	Not reported
Release Number:	REL-010991
URL:	https://socgov18.force.com/s/release/a183h000003KY7F

CO ERNS:

Name:	Not reported
Address:	16173 DENVER WEST PKWY
City,State,Zip:	GOLDEN, CO 80401-
Lat/Long:	0 / 0
Date Entered:	07/08/1998
Time Entered:	16:11
Date Reported:	1998-06-16
Reported Time:	14:15
Report Taken By:	JONES, JANET
PRP EMail:	Not reported
NRC Number:	Not reported
PRP Name:	DEPARTMENT OF ENERGY
PRP Contact:	MAUREEN JORDAN
PRP Address:	1617 COLE BLVD
PRP City,St,Zip:	GOLDEN, CO 80401-
PRP County:	JEFFERSON
PRP Phone:	303-275-3248-
Phone Extension:	Not reported
PRP Fax:	Not reported
Mile Post:	Not reported
Event Date:	06/12/1998
Event Time:	1899-12-30
Material Type:	OIL
Material1:	OILS,DIESEL
Quantity1:	400
Unit1:	Gallons
Water Quantity:	0
Water Unit:	Not reported
Material2:	Not reported
Quantity2:	0
Unit2:	Not reported
Water Quantity2:	0
Water Unit2:	Not reported

SOUTH TABLE MOUNTAIN SITE (Continued) **S104303003**

Material3:	Not reported
Quantity3:	0
Unit3:	Not reported
Water Quantity3:	0
Water unit3:	Not reported
Source:	Aboveground Tank
Source Type:	ABOVE GROUND STORAGE TANK
Cause:	Unknown
Medium:	LAND
Waterway Affected:	Not reported
Deaths:	0
Injuries:	0
Evacuation:	Not reported
Evacuation Num:	0
Responders:	Not reported
Fixed Facility:	False
Land Impact:	True
Air Impact:	False
SurfWater Impact:	False
Grd Water Impact:	False
Action:	BACKHOE SHOULD ARRIVE AT 8 AM TOMORROW TO DIG OUT CONTAMINATED SOIL (AS MUCH AS POSSIBLE W/OUT COMPROMISING STRUCTURE.)
Additional Info:	Not reported
Cause Info:	UNKNOWN
Comments:	SPILL IS NOT CONTAINED. DIESEL HAS SATURATED THE SOIL & ONTO THE CONCRETE PADWHERE THE EMERGENCY GEN
Notified:	Not reported
Responders:	PLAN TO USE A VAPOR RECOVERY SYSTEM IF OIL IS FOUND BENEATH PAD.

27
South
1/2-1
0.744 mi.
3930 ft.

Relative:
Higher

Actual:
5953 ft.

MOUNTAIN CHEM INC
16035 W 4TH AVE
GOLDEN, CO 80401

CORRACTS **1000321940**
RCRA-TSDF **N/A**
SEMS-ARCHIVE
ECHO
RAATS
RCRA NonGen / NLR
FINDS

SEMS Archive:

Site ID:	0800106
EPA ID:	COD040713562
Name:	MOUNTAIN CHEM INC
Address:	16035 W 4TH AVE
Address 2:	Not reported
City,State,Zip:	GOLDEN, CO 80401
Cong District:	02
FIPS Code:	08059
FF:	N
NPL:	Not on the NPL
Non NPL Status:	Deferred to RCRA (Subtitle C)

SEMS Archive Detail:

Region:	08
Site ID:	0800106
EPA ID:	COD040713562
Site Name:	MOUNTAIN CHEM INC
NPL:	N
FF:	N
OU:	00

MOUNTAIN CHEM INC (Continued) **1000321940**

Action Code: PA
Action Name: PA
SEQ: 1
Start Date: Not reported
Finish Date: 1984-12-01 06:00:00
Qual: L
Current Action Lead: St Perf

Region: 08
Site ID: 0800106
EPA ID: COD040713562
Site Name: MOUNTAIN CHEM INC
NPL: N
FF: N
OU: 00
Action Code: PA
Action Name: PA
SEQ: 2
Start Date: Not reported
Finish Date: 1992-07-15 04:00:00
Qual: D
Current Action Lead: EPA Perf

Region: 08
Site ID: 0800106
EPA ID: COD040713562
Site Name: MOUNTAIN CHEM INC
NPL: N
FF: N
OU: 00
Action Code: DS
Action Name: DISCVRY
SEQ: 1
Start Date: 1980-08-01 04:00:00
Finish Date: 1980-08-01 04:00:00
Qual: Not reported
Current Action Lead: EPA Perf

Region: 08
Site ID: 0800106
EPA ID: COD040713562
Site Name: MOUNTAIN CHEM INC
NPL: N
FF: N
OU: 00
Action Code: SI
Action Name: SI
SEQ: 1
Start Date: Not reported
Finish Date: 1984-10-01 05:00:00
Qual: N
Current Action Lead: St Perf

Region: 08
Site ID: 0800106
EPA ID: COD040713562
Site Name: MOUNTAIN CHEM INC

MOUNTAIN CHEM INC (Continued) **1000321940**

NPL: N
FF: N
OU: 00
Action Code: VS
Action Name: ARCH SITE
SEQ: 1
Start Date: Not reported
Finish Date: 1996-10-10 04:00:00
Qual: Not reported
Current Action Lead: EPA Perf In-Hse

CORRACTS:
Name: MOUNTAIN CHEMICALS INC
Address: 16035 W 4TH AVE
Address 2: Not reported
EPA ID: COD040713562
Area Name: ENTIRE FACILITY
Corrective Action: RFA COMPLETED BY INSTITUTIONAL KNOWLEDGE
Actual Date: 19910603
Air Release Indicator: Not reported
Groundwater Release Indicator: Not reported
Soil Release Indicator: Not reported
Surface Water Release Indicator: Not reported

Name: MOUNTAIN CHEMICALS INC
Address: 16035 W 4TH AVE
Address 2: Not reported
EPA ID: COD040713562
Area Name: ENTIRE FACILITY
Corrective Action: DETERMINATION OF NEED FOR AN INVESTIGATION-INVESTIGATION IS NECESSARY
Actual Date: 19910603
Air Release Indicator: Not reported
Groundwater Release Indicator: Not reported
Soil Release Indicator: Not reported
Surface Water Release Indicator: Not reported

Name: MOUNTAIN CHEMICALS INC
Address: 16035 W 4TH AVE
Address 2: Not reported
EPA ID: COD040713562
Area Name: ENTIRE FACILITY
Corrective Action: CA PRIORITIZATION-LOW CA PRIORITY
Actual Date: 19910603
Air Release Indicator: Not reported
Groundwater Release Indicator: Not reported
Soil Release Indicator: Not reported
Surface Water Release Indicator: Not reported

Name: MOUNTAIN CHEMICALS INC
Address: 16035 W 4TH AVE
Address 2: Not reported
EPA ID: COD040713562
Area Name: ENTIRE FACILITY
Corrective Action: INVESTIGATION IMPOSITION
Actual Date: 19840522
Air Release Indicator: Not reported

MOUNTAIN CHEM INC (Continued) **1000321940**

Groundwater Release Indicator: Not reported
Soil Release Indicator: Not reported
Surface Water Release Indicator: Not reported

Name: MOUNTAIN CHEMICALS INC
Address: 16035 W 4TH AVE
Address 2: Not reported
EPA ID: COD040713562
Area Name: ENTIRE FACILITY
Corrective Action: STABILIZATION MEASURES EVALUATION-FACILITY NOT AMENABLE TO STABILIZATION
Actual Date: 19910603
Air Release Indicator: Not reported
Groundwater Release Indicator: Not reported
Soil Release Indicator: Not reported
Surface Water Release Indicator: Not reported

Name: MOUNTAIN CHEMICALS INC
Address: 16035 W 4TH AVE
Address 2: Not reported
EPA ID: COD040713562
Area Name: ENTIRE FACILITY
Corrective Action: HUMAN EXPOSURES CONTROLLED DETERMINATION-YES, APPLICABLE AS OF THIS DATE
Actual Date: 19910603
Air Release Indicator: Not reported
Groundwater Release Indicator: Not reported
Soil Release Indicator: Not reported
Surface Water Release Indicator: Not reported

Name: MOUNTAIN CHEMICALS INC
Address: 16035 W 4TH AVE
Address 2: Not reported
EPA ID: COD040713562
Area Name: ENTIRE FACILITY
Corrective Action: RELEASE TO GW CONTROLLED DETERMINATION-YES, APPLICABLE AS OF THIS DATE
Actual Date: 19910603
Air Release Indicator: Not reported
Groundwater Release Indicator: Not reported
Soil Release Indicator: Not reported
Surface Water Release Indicator: Not reported

Name: MOUNTAIN CHEMICALS INC
Address: 16035 W 4TH AVE
Address 2: Not reported
EPA ID: COD040713562
Area Name: ENTIRE FACILITY
Corrective Action: CA PROCESS IS TERMINATED-REMEDIAL ACTIVITIES COMPLETE
Actual Date: 19910603
Air Release Indicator: Not reported
Groundwater Release Indicator: Not reported
Soil Release Indicator: Not reported
Surface Water Release Indicator: Not reported

RCRA TSDF:
Treatment Storage and Disposal Type: Storage, Treatment
Full Enforcement Universe: Not reported

MOUNTAIN CHEM INC (Continued) **1000321940**

Corrective Action Workload Universe: No
Permit Renewals Workload Universe: Not reported
Permit Workload Universe: Not reported
Permit Progress Universe: Storage, Treatment
Post-Closure Workload Universe: Not reported
Closure Workload Universe: Not reported
Operating TSDF Universe: Not reported
Commercial TSD Indicator: No
Active Site Fed-Reg Treatment Storage and Disposal Facility: Not reported
Active Site Converter Treatment storage and Disposal Facility: Not reported
Active Site State-Reg Treatment Storage and Disposal Facility: Not reported
TSDFs Potentially Subject to CA Under 3004 (u)/(v) Universe: No
TSDFs Only Subject to CA under Discretionary Auth Universe: Yes

RCRA Listings:
Date Form Received by Agency: 20010731
Handler Name: Mountain Chemicals Inc
Handler Address: W 4th Ave
Handler City,State,Zip: GOLDEN, CO 80401
EPA ID: COD040713562
Contact Name: Not reported
Contact Address: Not reported
Contact City,State,Zip: Not reported
Contact Telephone: Not reported
Contact Fax: Not reported
Contact Email: Not reported
Contact Title: Not reported
EPA Region: 08
Land Type: Not reported
Federal Waste Generator Description: Not a generator, verified
Non-Notifier: Not reported
Biennial Report Cycle: Not reported
Accessibility: Not reported
Active Site Indicator: Not reported
State District Owner: Co
State District: R
Mailing Address: W 4TH AVE
Mailing City,State,Zip: GOLDEN, CO 80401
Owner Name: Not reported
Owner Type: Not reported
Operator Name: Not reported
Operator Type: Not reported
Short-Term Generator Activity: No
Importer Activity: No
Mixed Waste Generator: No
Transporter Activity: No
Transfer Facility Activity: No
Recycler Activity with Storage: No
Small Quantity On-Site Burner Exemption: No
Smelting Melting and Refining Furnace Exemption: No
Underground Injection Control: No
Off-Site Waste Receipt: No
Universal Waste Indicator: No
Universal Waste Destination Facility: No
Federal Universal Waste: No
Active Site State-Reg Handler: ---

MOUNTAIN CHEM INC (Continued) **1000321940**

Federal Facility Indicator: Not reported
Hazardous Secondary Material Indicator: N
Sub-Part K Indicator: Not reported
2018 GPRA Permit Baseline: Not on the Baseline
2018 GPRA Renewals Baseline: Not on the Baseline
202 GPRA Corrective Action Baseline: No
Subject to Corrective Action Universe: Yes
Non-TSDFs Where RCRA CA has Been Imposed Universe: No
Corrective Action Priority Ranking: Low
Environmental Control Indicator: No
Institutional Control Indicator: No
Human Exposure Controls Indicator: Yes
Groundwater Controls Indicator: Yes
Significant Non-Complier Universe: No
Unaddressed Significant Non-Complier Universe: No
Addressed Significant Non-Complier Universe: No
Significant Non-Complier With a Compliance Schedule Universe: No
Financial Assurance Required: Not reported
Handler Date of Last Change: 20010802
Recognized Trader-Importer: No
Recognized Trader-Exporter: No
Importer of Spent Lead Acid Batteries: No
Exporter of Spent Lead Acid Batteries: No
Recycler Activity Without Storage: No
Manifest Broker: No
Sub-Part P Indicator: No

Hazardous Waste Summary:

Waste Code: D000
Waste Description: Not Defined

Waste Code: D001
Waste Description: Ignitable Waste

Waste Code: F001
Waste Description: The Following Spent Halogenated Solvents Used In Degreasing: Tetrachloroethylene, Trichlorethylene, Methylene Chloride, 1,1,1-Trichloroethane, Carbon Tetrachloride And Chlorinated Fluorocarbons; All Spent Solvent Mixtures/Blends Used In Degreasing Containing, Before Use, A Total Of Ten Percent Or More (By Volume) Of One Or More Of The Above Halogenated Solvents Or Those Solvents Listed In F002, F004, And F005; And Still Bottoms From The Recovery Of These Spent Solvents And Spent Solvent Mixtures.

Waste Code: F002
Waste Description: The Following Spent Halogenated Solvents: Tetrachloroethylene, Methylene Chloride, Trichloroethylene, 1,1,1-Trichloroethane, Chlorobenzene, 1,1,2-Trichloro-1,2,2-Trifluoroethane, Ortho-Dichlorobenzene, Trichlorofluoromethane, And 1,1,2, Trichloroethane; All Spent Solvent Mixtures/Blends Containing, Before Use, A Total Of Ten Percent Or More (By Volume) Of One Or More Of The Above Halogenated Solvents Or Those Solvents Listed In F001, F004, And F005; And Still Bottoms From The Recovery Of These Spent Solvents And Spent Solvent Mixtures.

Waste Code: F003

MOUNTAIN CHEM INC (Continued) **1000321940**

Waste Description: The Following Spent Nonhalogenated Solvents: Xylene, Acetone, Ethyl Acetate, Ethyl Benzene, Ethyl Ether, Methyl Isobutyl Ketone, N-Butyl Alcohol, Cyclohexanone, And Methanol; All Spent Solvent Mixtures/Blends Containing, Before Use, Only The Above Spent Nonhalogenated Solvents; And All Spent Solvent Mixtures/Blends Containing, Before Use, One Or More Of The Above Nonhalogenated Solvents, And A Total Of Ten Percent Or More (By Volume) Of One Or More Of Those Solvents Listed In F001, F002, F004, And F005; And Still Bottoms From The Recovery Of These Spent Solvents And Spent Solvent Mixtures.

Waste Code: F005
Waste Description: The Following Spent Nonhalogenated Solvents: Toluene, Methyl Ethyl Ketone, Carbon Disulfide, Isobutanol, Pyridine, Benzene, 2-Ethoxyethanol, And 2-Nitropropane; All Spent Solvent Mixtures/Blends Containing, Before Use, A Total Of Ten Percent Or More (By Volume) Of One Or More Of The Above Nonhalogenated Solvents Or Those Solvents Listed In F001, F002, Or F004; And Still Bottoms From The Recovery Of These Spent Solvents And Spent Solvent Mixtures.

Waste Code: F017
Waste Description: Not Defined

Waste Code: K078
Waste Description: Not Defined

Waste Code: U002
Waste Description: 2-Propanone (I) (Or) Acetone (I)

Waste Code: U019
Waste Description: Benzene (I,T)

Waste Code: U031
Waste Description: 1-Butanol (I) (Or) N-Butyl Alcohol (I)

Waste Code: U037
Waste Description: Benzene, Chloro- (Or) Chlorobenzene

Waste Code: U044
Waste Description: Chloroform (Or) Methane, Trichloro-

Waste Code: U056
Waste Description: Benzene, Hexahydro- (I) (Or) Cyclohexane (I)

Waste Code: U077
Waste Description: Ethane, 1,2-Dichloro- (Or) Ethylene Dichloride

Waste Code: U108
Waste Description: 1,4-Diethyleneoxide (Or) 1,4-Dioxane

Waste Code: U112
Waste Description: Acetic Acid, Ethyl Ester (I) (Or) Ethyl Acetate (I)

Waste Code: U117
Waste Description: Ethane, 1,1'-Oxybis-(I) (Or) Ethyl Ether (I)

Waste Code: U122

MOUNTAIN CHEM INC (Continued) **1000321940**

Waste Description: Formaldehyde

Waste Code: U140
Waste Description: 1-Propanol, 2-Methyl- (I,T) (Or) Isobutyl Alcohol (I,T)

Waste Code: U154
Waste Description: Methanol (I) (Or) Methyl Alcohol (I)

Waste Code: U159
Waste Description: 2-Butanone (I,T) (Or) Methyl Ethyl Ketone (Mek) (I,T)

Waste Code: U161
Waste Description: 4-Methyl-2-Pentanone (I) (Or) Methyl Isobutyl Ketone (I) (Or) Pentanol, 4-Methyl-

Waste Code: U188
Waste Description: Phenol

Waste Code: U210
Waste Description: Ethene, Tetrachloro- (Or) Tetrachloroethylene

Waste Code: U213
Waste Description: Furan, Tetrahydro-(I) (Or) Tetrahydrofuran (I)

Waste Code: U220
Waste Description: Benzene, Methyl- (Or) Toluene

Waste Code: U228
Waste Description: Ethene, Trichloro- (Or) Trichloroethylene

Waste Code: U239
Waste Description: Benzene, Dimethyl- (I,T) (Or) Xylene (I)

Handler - Owner Operator:
Owner/Operator Indicator: Operator
Owner/Operator Name: MOUNTAIN CHEMICALS INC
Legal Status: Private
Date Became Current: Not reported
Date Ended Current: Not reported
Owner/Operator Address: 16035 W 4TH AVE
Owner/Operator City,State,Zip: CO
Owner/Operator Telephone: 303-278-0323
Owner/Operator Telephone Ext: Not reported
Owner/Operator Fax: Not reported
Owner/Operator Email: Not reported

Owner/Operator Indicator: Owner
Owner/Operator Name: LELAND F GOOD
Legal Status: Private
Date Became Current: Not reported
Date Ended Current: Not reported
Owner/Operator Address: 13240 WILLOW LANE
Owner/Operator City,State,Zip: GOLDEN, CO 80401
Owner/Operator Telephone: 303-233-1473
Owner/Operator Telephone Ext: Not reported
Owner/Operator Fax: Not reported
Owner/Operator Email: Not reported

MOUNTAIN CHEM INC (Continued) **1000321940**

Historic Generators:
Receive Date: 20010731
Handler Name: MOUNTAIN CHEMICALS INC
Federal Waste Generator Description: Not a generator, verified
State District Owner: Co
Large Quantity Handler of Universal Waste: No
Recognized Trader Importer: No
Recognized Trader Exporter: No
Spent Lead Acid Battery Importer: No
Spent Lead Acid Battery Exporter: No
Current Record: Yes
Non Storage Recycler Activity: Not reported
Electronic Manifest Broker: Not reported

Receive Date: 19800804
Handler Name: MOUNTAIN CHEMICALS INC
Federal Waste Generator Description: Large Quantity Generator
State District Owner: Co
Large Quantity Handler of Universal Waste: No
Recognized Trader Importer: No
Recognized Trader Exporter: No
Spent Lead Acid Battery Importer: No
Spent Lead Acid Battery Exporter: No
Current Record: No
Non Storage Recycler Activity: Not reported
Electronic Manifest Broker: Not reported

Receive Date: 19801119
Handler Name: MOUNTAIN CHEMICALS INC
Federal Waste Generator Description: Not a generator, verified
State District Owner: Co
Large Quantity Handler of Universal Waste: No
Recognized Trader Importer: No
Recognized Trader Exporter: No
Spent Lead Acid Battery Importer: No
Spent Lead Acid Battery Exporter: No
Current Record: No
Non Storage Recycler Activity: Not reported
Electronic Manifest Broker: Not reported

List of NAICS Codes and Descriptions:
NAICS Code: 32511
NAICS Description: PETROCHEMICAL MANUFACTURING

NAICS Code: 325188
NAICS Description: ALL OTHER BASIC INORGANIC CHEMICAL MANUFACTURING

Has the Facility Received Notices of Violations:
Found Violation: Yes
Agency Which Determined Violation: EPA
Violation Short Description: TSD - Closure/Post-Closure
Date Violation was Determined: 19821105
Actual Return to Compliance Date: 19850826
Return to Compliance Qualifier: Unverifiable
Violation Responsible Agency: EPA
Scheduled Compliance Date: 19850331

MOUNTAIN CHEM INC (Continued) **1000321940**

Enforcement Identifier: 001
Date of Enforcement Action: 19840522
Enforcement Responsible Agency: EPA
Enforcement Docket Number: Not reported
Enforcement Attorney: Not reported
Corrective Action Component: No
Appeal Initiated Date: Not reported
Appeal Resolution Date: Not reported
Disposition Status Date: Not reported
Disposition Status: Not reported
Disposition Status Description: Not reported
Consent/Final Order Sequence Number: Not reported
Consent/Final Order Respondent Name: Not reported
Consent/Final Order Lead Agency: Not reported
Enforcement Type: FINAL 3008(A) COMPLIANCE ORDER
Enforcement Responsible Person: Not reported
Enforcement Responsible Sub-Organization: Not reported
SEP Sequence Number: Not reported
SEP Expenditure Amount: Not reported
SEP Scheduled Completion Date: Not reported
SEP Actual Date: Not reported
SEP Defaulted Date: Not reported
SEP Type: Not reported
SEP Type Description: Not reported
Proposed Amount: 50700
Final Monetary Amount: 50700
Paid Amount: Not reported
Final Count: 1
Final Amount: 50700

Found Violation: No
Agency Which Determined Violation: Not reported
Violation Short Description: Not reported
Date Violation was Determined: Not reported
Actual Return to Compliance Date: Not reported
Return to Compliance Qualifier: Not reported
Violation Responsible Agency: Not reported
Scheduled Compliance Date: Not reported
Enforcement Identifier: Not reported
Date of Enforcement Action: Not reported
Enforcement Responsible Agency: Not reported
Enforcement Docket Number: Not reported
Enforcement Attorney: Not reported
Corrective Action Component: Not reported
Appeal Initiated Date: Not reported
Appeal Resolution Date: Not reported
Disposition Status Date: Not reported
Disposition Status: Not reported
Disposition Status Description: Not reported
Consent/Final Order Sequence Number: Not reported
Consent/Final Order Respondent Name: Not reported
Consent/Final Order Lead Agency: Not reported
Enforcement Type: Not reported
Enforcement Responsible Person: Not reported
Enforcement Responsible Sub-Organization: Not reported
SEP Sequence Number: Not reported
SEP Expenditure Amount: Not reported

MOUNTAIN CHEM INC (Continued) **1000321940**

SEP Scheduled Completion Date: Not reported
SEP Actual Date: Not reported
SEP Defaulted Date: Not reported
SEP Type: Not reported
SEP Type Description: Not reported
Proposed Amount: Not reported
Final Monetary Amount: Not reported
Paid Amount: Not reported
Final Count: Not reported
Final Amount: Not reported

Found Violation: No
Agency Which Determined Violation: Not reported
Violation Short Description: Not reported
Date Violation was Determined: Not reported
Actual Return to Compliance Date: Not reported
Return to Compliance Qualifier: Not reported
Violation Responsible Agency: Not reported
Scheduled Compliance Date: Not reported
Enforcement Identifier: Not reported
Date of Enforcement Action: Not reported
Enforcement Responsible Agency: Not reported
Enforcement Docket Number: Not reported
Enforcement Attorney: Not reported
Corrective Action Component: Not reported
Appeal Initiated Date: Not reported
Appeal Resolution Date: Not reported
Disposition Status Date: Not reported
Disposition Status: Not reported
Disposition Status Description: Not reported
Consent/Final Order Sequence Number: Not reported
Consent/Final Order Respondent Name: Not reported
Consent/Final Order Lead Agency: Not reported
Enforcement Type: Not reported
Enforcement Responsible Person: Not reported
Enforcement Responsible Sub-Organization: Not reported
SEP Sequence Number: Not reported
SEP Expenditure Amount: Not reported
SEP Scheduled Completion Date: Not reported
SEP Actual Date: Not reported
SEP Defaulted Date: Not reported
SEP Type: Not reported
SEP Type Description: Not reported
Proposed Amount: Not reported
Final Monetary Amount: Not reported
Paid Amount: Not reported
Final Count: Not reported
Final Amount: Not reported

Found Violation: No
Agency Which Determined Violation: Not reported
Violation Short Description: Not reported
Date Violation was Determined: Not reported
Actual Return to Compliance Date: Not reported
Return to Compliance Qualifier: Not reported
Violation Responsible Agency: Not reported
Scheduled Compliance Date: Not reported

MOUNTAIN CHEM INC (Continued) **1000321940**

Enforcement Identifier: Not reported
Date of Enforcement Action: Not reported
Enforcement Responsible Agency: Not reported
Enforcement Docket Number: Not reported
Enforcement Attorney: Not reported
Corrective Action Component: Not reported
Appeal Initiated Date: Not reported
Appeal Resolution Date: Not reported
Disposition Status Date: Not reported
Disposition Status: Not reported
Disposition Status Description: Not reported
Consent/Final Order Sequence Number: Not reported
Consent/Final Order Respondent Name: Not reported
Consent/Final Order Lead Agency: Not reported
Enforcement Type: Not reported
Enforcement Responsible Person: Not reported
Enforcement Responsible Sub-Organization: Not reported
SEP Sequence Number: Not reported
SEP Expenditure Amount: Not reported
SEP Scheduled Completion Date: Not reported
SEP Actual Date: Not reported
SEP Defaulted Date: Not reported
SEP Type: Not reported
SEP Type Description: Not reported
Proposed Amount: Not reported
Final Monetary Amount: Not reported
Paid Amount: Not reported
Final Count: Not reported
Final Amount: Not reported

Found Violation: No
Agency Which Determined Violation: Not reported
Violation Short Description: Not reported
Date Violation was Determined: Not reported
Actual Return to Compliance Date: Not reported
Return to Compliance Qualifier: Not reported
Violation Responsible Agency: Not reported
Scheduled Compliance Date: Not reported
Enforcement Identifier: Not reported
Date of Enforcement Action: Not reported
Enforcement Responsible Agency: Not reported
Enforcement Docket Number: Not reported
Enforcement Attorney: Not reported
Corrective Action Component: Not reported
Appeal Initiated Date: Not reported
Appeal Resolution Date: Not reported
Disposition Status Date: Not reported
Disposition Status: Not reported
Disposition Status Description: Not reported
Consent/Final Order Sequence Number: Not reported
Consent/Final Order Respondent Name: Not reported
Consent/Final Order Lead Agency: Not reported
Enforcement Type: Not reported
Enforcement Responsible Person: Not reported
Enforcement Responsible Sub-Organization: Not reported
SEP Sequence Number: Not reported
SEP Expenditure Amount: Not reported

MOUNTAIN CHEM INC (Continued) **1000321940**

SEP Scheduled Completion Date: Not reported
SEP Actual Date: Not reported
SEP Defaulted Date: Not reported
SEP Type: Not reported
SEP Type Description: Not reported
Proposed Amount: Not reported
Final Monetary Amount: Not reported
Paid Amount: Not reported
Final Count: Not reported
Final Amount: Not reported

Found Violation: No
Agency Which Determined Violation: Not reported
Violation Short Description: Not reported
Date Violation was Determined: Not reported
Actual Return to Compliance Date: Not reported
Return to Compliance Qualifier: Not reported
Violation Responsible Agency: Not reported
Scheduled Compliance Date: Not reported
Enforcement Identifier: Not reported
Date of Enforcement Action: Not reported
Enforcement Responsible Agency: Not reported
Enforcement Docket Number: Not reported
Enforcement Attorney: Not reported
Corrective Action Component: Not reported
Appeal Initiated Date: Not reported
Appeal Resolution Date: Not reported
Disposition Status Date: Not reported
Disposition Status: Not reported
Disposition Status Description: Not reported
Consent/Final Order Sequence Number: Not reported
Consent/Final Order Respondent Name: Not reported
Consent/Final Order Lead Agency: Not reported
Enforcement Type: Not reported
Enforcement Responsible Person: Not reported
Enforcement Responsible Sub-Organization: Not reported
SEP Sequence Number: Not reported
SEP Expenditure Amount: Not reported
SEP Scheduled Completion Date: Not reported
SEP Actual Date: Not reported
SEP Defaulted Date: Not reported
SEP Type: Not reported
SEP Type Description: Not reported
Proposed Amount: Not reported
Final Monetary Amount: Not reported
Paid Amount: Not reported
Final Count: Not reported
Final Amount: Not reported

Found Violation: Yes
Agency Which Determined Violation: EPA
Violation Short Description: TSD - General
Date Violation was Determined: 19821105
Actual Return to Compliance Date: 19850826
Return to Compliance Qualifier: Unverifiable
Violation Responsible Agency: EPA
Scheduled Compliance Date: 19850331

MOUNTAIN CHEM INC (Continued) **1000321940**

Enforcement Identifier: 001
Date of Enforcement Action: 19840522
Enforcement Responsible Agency: EPA
Enforcement Docket Number: Not reported
Enforcement Attorney: Not reported
Corrective Action Component: No
Appeal Initiated Date: Not reported
Appeal Resolution Date: Not reported
Disposition Status Date: Not reported
Disposition Status: Not reported
Disposition Status Description: Not reported
Consent/Final Order Sequence Number: Not reported
Consent/Final Order Respondent Name: Not reported
Consent/Final Order Lead Agency: Not reported
Enforcement Type: FINAL 3008(A) COMPLIANCE ORDER
Enforcement Responsible Person: Not reported
Enforcement Responsible Sub-Organization: Not reported
SEP Sequence Number: Not reported
SEP Expenditure Amount: Not reported
SEP Scheduled Completion Date: Not reported
SEP Actual Date: Not reported
SEP Defaulted Date: Not reported
SEP Type: Not reported
SEP Type Description: Not reported
Proposed Amount: 50700
Final Monetary Amount: 50700
Paid Amount: Not reported
Final Count: 1
Final Amount: 50700

Found Violation: No
Agency Which Determined Violation: Not reported
Violation Short Description: Not reported
Date Violation was Determined: Not reported
Actual Return to Compliance Date: Not reported
Return to Compliance Qualifier: Not reported
Violation Responsible Agency: Not reported
Scheduled Compliance Date: Not reported
Enforcement Identifier: Not reported
Date of Enforcement Action: Not reported
Enforcement Responsible Agency: Not reported
Enforcement Docket Number: Not reported
Enforcement Attorney: Not reported
Corrective Action Component: Not reported
Appeal Initiated Date: Not reported
Appeal Resolution Date: Not reported
Disposition Status Date: Not reported
Disposition Status: Not reported
Disposition Status Description: Not reported
Consent/Final Order Sequence Number: Not reported
Consent/Final Order Respondent Name: Not reported
Consent/Final Order Lead Agency: Not reported
Enforcement Type: Not reported
Enforcement Responsible Person: Not reported
Enforcement Responsible Sub-Organization: Not reported
SEP Sequence Number: Not reported
SEP Expenditure Amount: Not reported

MOUNTAIN CHEM INC (Continued) **1000321940**

SEP Scheduled Completion Date: Not reported
SEP Actual Date: Not reported
SEP Defaulted Date: Not reported
SEP Type: Not reported
SEP Type Description: Not reported
Proposed Amount: Not reported
Final Monetary Amount: Not reported
Paid Amount: Not reported
Final Count: Not reported
Final Amount: Not reported

Found Violation: No
Agency Which Determined Violation: Not reported
Violation Short Description: Not reported
Date Violation was Determined: Not reported
Actual Return to Compliance Date: Not reported
Return to Compliance Qualifier: Not reported
Violation Responsible Agency: Not reported
Scheduled Compliance Date: Not reported
Enforcement Identifier: Not reported
Date of Enforcement Action: Not reported
Enforcement Responsible Agency: Not reported
Enforcement Docket Number: Not reported
Enforcement Attorney: Not reported
Corrective Action Component: Not reported
Appeal Initiated Date: Not reported
Appeal Resolution Date: Not reported
Disposition Status Date: Not reported
Disposition Status: Not reported
Disposition Status Description: Not reported
Consent/Final Order Sequence Number: Not reported
Consent/Final Order Respondent Name: Not reported
Consent/Final Order Lead Agency: Not reported
Enforcement Type: Not reported
Enforcement Responsible Person: Not reported
Enforcement Responsible Sub-Organization: Not reported
SEP Sequence Number: Not reported
SEP Expenditure Amount: Not reported
SEP Scheduled Completion Date: Not reported
SEP Actual Date: Not reported
SEP Defaulted Date: Not reported
SEP Type: Not reported
SEP Type Description: Not reported
Proposed Amount: Not reported
Final Monetary Amount: Not reported
Paid Amount: Not reported
Final Count: Not reported
Final Amount: Not reported

Found Violation: No
Agency Which Determined Violation: Not reported
Violation Short Description: Not reported
Date Violation was Determined: Not reported
Actual Return to Compliance Date: Not reported
Return to Compliance Qualifier: Not reported
Violation Responsible Agency: Not reported
Scheduled Compliance Date: Not reported

MOUNTAIN CHEM INC (Continued) **1000321940**

Enforcement Identifier: Not reported
Date of Enforcement Action: Not reported
Enforcement Responsible Agency: Not reported
Enforcement Docket Number: Not reported
Enforcement Attorney: Not reported
Corrective Action Component: Not reported
Appeal Initiated Date: Not reported
Appeal Resolution Date: Not reported
Disposition Status Date: Not reported
Disposition Status: Not reported
Disposition Status Description: Not reported
Consent/Final Order Sequence Number: Not reported
Consent/Final Order Respondent Name: Not reported
Consent/Final Order Lead Agency: Not reported
Enforcement Type: Not reported
Enforcement Responsible Person: Not reported
Enforcement Responsible Sub-Organization: Not reported
SEP Sequence Number: Not reported
SEP Expenditure Amount: Not reported
SEP Scheduled Completion Date: Not reported
SEP Actual Date: Not reported
SEP Defaulted Date: Not reported
SEP Type: Not reported
SEP Type Description: Not reported
Proposed Amount: Not reported
Final Monetary Amount: Not reported
Paid Amount: Not reported
Final Count: Not reported
Final Amount: Not reported

Found Violation: Yes
Agency Which Determined Violation: EPA
Violation Short Description: TSD - General
Date Violation was Determined: 19841220
Actual Return to Compliance Date: 19850117
Return to Compliance Qualifier: Unverifiable
Violation Responsible Agency: EPA
Scheduled Compliance Date: Not reported
Enforcement Identifier: Not reported
Date of Enforcement Action: Not reported
Enforcement Responsible Agency: Not reported
Enforcement Docket Number: Not reported
Enforcement Attorney: Not reported
Corrective Action Component: Not reported
Appeal Initiated Date: Not reported
Appeal Resolution Date: Not reported
Disposition Status Date: Not reported
Disposition Status: Not reported
Disposition Status Description: Not reported
Consent/Final Order Sequence Number: Not reported
Consent/Final Order Respondent Name: Not reported
Consent/Final Order Lead Agency: Not reported
Enforcement Type: Not reported
Enforcement Responsible Person: Not reported
Enforcement Responsible Sub-Organization: Not reported
SEP Sequence Number: Not reported
SEP Expenditure Amount: Not reported

MOUNTAIN CHEM INC (Continued) **1000321940**

SEP Scheduled Completion Date: Not reported
SEP Actual Date: Not reported
SEP Defaulted Date: Not reported
SEP Type: Not reported
SEP Type Description: Not reported
Proposed Amount: Not reported
Final Monetary Amount: Not reported
Paid Amount: Not reported
Final Count: Not reported
Final Amount: Not reported

Found Violation: Yes
Agency Which Determined Violation: EPA
Violation Short Description: TSD - Closure/Post-Closure
Date Violation was Determined: 19821105
Actual Return to Compliance Date: 19850826
Return to Compliance Qualifier: Unverifiable
Violation Responsible Agency: EPA
Scheduled Compliance Date: Not reported
Enforcement Identifier: 002
Date of Enforcement Action: 19830228
Enforcement Responsible Agency: EPA
Enforcement Docket Number: Not reported
Enforcement Attorney: Not reported
Corrective Action Component: No
Appeal Initiated Date: Not reported
Appeal Resolution Date: Not reported
Disposition Status Date: Not reported
Disposition Status: Not reported
Disposition Status Description: Not reported
Consent/Final Order Sequence Number: Not reported
Consent/Final Order Respondent Name: Not reported
Consent/Final Order Lead Agency: Not reported
Enforcement Type: INITIAL 3008(A) COMPLIANCE
Enforcement Responsible Person: Not reported
Enforcement Responsible Sub-Organization: Not reported
SEP Sequence Number: Not reported
SEP Expenditure Amount: Not reported
SEP Scheduled Completion Date: Not reported
SEP Actual Date: Not reported
SEP Defaulted Date: Not reported
SEP Type: Not reported
SEP Type Description: Not reported
Proposed Amount: 50700
Final Monetary Amount: 50700
Paid Amount: Not reported
Final Count: 1
Final Amount: 50700

Found Violation: No
Agency Which Determined Violation: Not reported
Violation Short Description: Not reported
Date Violation was Determined: Not reported
Actual Return to Compliance Date: Not reported
Return to Compliance Qualifier: Not reported
Violation Responsible Agency: Not reported
Scheduled Compliance Date: Not reported

MOUNTAIN CHEM INC (Continued) **1000321940**

Enforcement Identifier: Not reported
Date of Enforcement Action: Not reported
Enforcement Responsible Agency: Not reported
Enforcement Docket Number: Not reported
Enforcement Attorney: Not reported
Corrective Action Component: Not reported
Appeal Initiated Date: Not reported
Appeal Resolution Date: Not reported
Disposition Status Date: Not reported
Disposition Status: Not reported
Disposition Status Description: Not reported
Consent/Final Order Sequence Number: Not reported
Consent/Final Order Respondent Name: Not reported
Consent/Final Order Lead Agency: Not reported
Enforcement Type: Not reported
Enforcement Responsible Person: Not reported
Enforcement Responsible Sub-Organization: Not reported
SEP Sequence Number: Not reported
SEP Expenditure Amount: Not reported
SEP Scheduled Completion Date: Not reported
SEP Actual Date: Not reported
SEP Defaulted Date: Not reported
SEP Type: Not reported
SEP Type Description: Not reported
Proposed Amount: Not reported
Final Monetary Amount: Not reported
Paid Amount: Not reported
Final Count: Not reported
Final Amount: Not reported

Found Violation: No
Agency Which Determined Violation: Not reported
Violation Short Description: Not reported
Date Violation was Determined: Not reported
Actual Return to Compliance Date: Not reported
Return to Compliance Qualifier: Not reported
Violation Responsible Agency: Not reported
Scheduled Compliance Date: Not reported
Enforcement Identifier: Not reported
Date of Enforcement Action: Not reported
Enforcement Responsible Agency: Not reported
Enforcement Docket Number: Not reported
Enforcement Attorney: Not reported
Corrective Action Component: Not reported
Appeal Initiated Date: Not reported
Appeal Resolution Date: Not reported
Disposition Status Date: Not reported
Disposition Status: Not reported
Disposition Status Description: Not reported
Consent/Final Order Sequence Number: Not reported
Consent/Final Order Respondent Name: Not reported
Consent/Final Order Lead Agency: Not reported
Enforcement Type: Not reported
Enforcement Responsible Person: Not reported
Enforcement Responsible Sub-Organization: Not reported
SEP Sequence Number: Not reported
SEP Expenditure Amount: Not reported

MOUNTAIN CHEM INC (Continued) **1000321940**

SEP Scheduled Completion Date: Not reported
SEP Actual Date: Not reported
SEP Defaulted Date: Not reported
SEP Type: Not reported
SEP Type Description: Not reported
Proposed Amount: Not reported
Final Monetary Amount: Not reported
Paid Amount: Not reported
Final Count: Not reported
Final Amount: Not reported

Found Violation: No
Agency Which Determined Violation: Not reported
Violation Short Description: Not reported
Date Violation was Determined: Not reported
Actual Return to Compliance Date: Not reported
Return to Compliance Qualifier: Not reported
Violation Responsible Agency: Not reported
Scheduled Compliance Date: Not reported
Enforcement Identifier: Not reported
Date of Enforcement Action: Not reported
Enforcement Responsible Agency: Not reported
Enforcement Docket Number: Not reported
Enforcement Attorney: Not reported
Corrective Action Component: Not reported
Appeal Initiated Date: Not reported
Appeal Resolution Date: Not reported
Disposition Status Date: Not reported
Disposition Status: Not reported
Disposition Status Description: Not reported
Consent/Final Order Sequence Number: Not reported
Consent/Final Order Respondent Name: Not reported
Consent/Final Order Lead Agency: Not reported
Enforcement Type: Not reported
Enforcement Responsible Person: Not reported
Enforcement Responsible Sub-Organization: Not reported
SEP Sequence Number: Not reported
SEP Expenditure Amount: Not reported
SEP Scheduled Completion Date: Not reported
SEP Actual Date: Not reported
SEP Defaulted Date: Not reported
SEP Type: Not reported
SEP Type Description: Not reported
Proposed Amount: Not reported
Final Monetary Amount: Not reported
Paid Amount: Not reported
Final Count: Not reported
Final Amount: Not reported

Found Violation: No
Agency Which Determined Violation: Not reported
Violation Short Description: Not reported
Date Violation was Determined: Not reported
Actual Return to Compliance Date: Not reported
Return to Compliance Qualifier: Not reported
Violation Responsible Agency: Not reported
Scheduled Compliance Date: Not reported

MOUNTAIN CHEM INC (Continued) **1000321940**

Enforcement Identifier: Not reported
Date of Enforcement Action: Not reported
Enforcement Responsible Agency: Not reported
Enforcement Docket Number: Not reported
Enforcement Attorney: Not reported
Corrective Action Component: Not reported
Appeal Initiated Date: Not reported
Appeal Resolution Date: Not reported
Disposition Status Date: Not reported
Disposition Status: Not reported
Disposition Status Description: Not reported
Consent/Final Order Sequence Number: Not reported
Consent/Final Order Respondent Name: Not reported
Consent/Final Order Lead Agency: Not reported
Enforcement Type: Not reported
Enforcement Responsible Person: Not reported
Enforcement Responsible Sub-Organization: Not reported
SEP Sequence Number: Not reported
SEP Expenditure Amount: Not reported
SEP Scheduled Completion Date: Not reported
SEP Actual Date: Not reported
SEP Defaulted Date: Not reported
SEP Type: Not reported
SEP Type Description: Not reported
Proposed Amount: Not reported
Final Monetary Amount: Not reported
Paid Amount: Not reported
Final Count: Not reported
Final Amount: Not reported

Evaluation Action Summary:
Evaluation Date: 19821105
Evaluation Responsible Agency: EPA
Found Violation: Yes
Evaluation Type Description: COMPLIANCE EVALUATION INSPECTION
Evaluation Responsible Person Identifier: Not reported
Evaluation Responsible Sub-Organization: Not reported
Actual Return to Compliance Date: 19850826
Scheduled Compliance Date: 19850331
Date of Request: Not reported
Date Response Received: Not reported
Request Agency: Not reported
Former Citation: Not reported

Evaluation Date: 19840827
Evaluation Responsible Agency: EPA
Found Violation: No
Evaluation Type Description: COMPLIANCE SCHEDULE EVALUATION
Evaluation Responsible Person Identifier: Not reported
Evaluation Responsible Sub-Organization: Not reported
Actual Return to Compliance Date: Not reported
Scheduled Compliance Date: Not reported
Date of Request: Not reported
Date Response Received: Not reported
Request Agency: Not reported
Former Citation: Not reported

MOUNTAIN CHEM INC (Continued) **1000321940**

Evaluation Date: 19890524
Evaluation Responsible Agency: State
Found Violation: No
Evaluation Type Description: COMPLIANCE EVALUATION INSPECTION
Evaluation Responsible Person Identifier: CONRE
Evaluation Responsible Sub-Organization: S
Actual Return to Compliance Date: Not reported
Scheduled Compliance Date: Not reported
Date of Request: Not reported
Date Response Received: Not reported
Request Agency: Not reported
Former Citation: Not reported

Evaluation Date: 20010731
Evaluation Responsible Agency: State
Found Violation: No
Evaluation Type Description: FOCUSED COMPLIANCE INSPECTION
Evaluation Responsible Person Identifier: COKST
Evaluation Responsible Sub-Organization: Not reported
Actual Return to Compliance Date: Not reported
Scheduled Compliance Date: Not reported
Date of Request: Not reported
Date Response Received: Not reported
Request Agency: Not reported
Former Citation: Not reported

Evaluation Date: 19910531
Evaluation Responsible Agency: State
Found Violation: No
Evaluation Type Description: COMPLIANCE EVALUATION INSPECTION
Evaluation Responsible Person Identifier: CONRE
Evaluation Responsible Sub-Organization: S
Actual Return to Compliance Date: Not reported
Scheduled Compliance Date: Not reported
Date of Request: Not reported
Date Response Received: Not reported
Request Agency: Not reported
Former Citation: Not reported

Evaluation Date: 19850826
Evaluation Responsible Agency: State
Found Violation: No
Evaluation Type Description: COMPLIANCE EVALUATION INSPECTION
Evaluation Responsible Person Identifier: COWAV
Evaluation Responsible Sub-Organization: S
Actual Return to Compliance Date: Not reported
Scheduled Compliance Date: Not reported
Date of Request: Not reported
Date Response Received: Not reported
Request Agency: Not reported
Former Citation: Not reported

Evaluation Date: 19821105
Evaluation Responsible Agency: EPA
Found Violation: Yes
Evaluation Type Description: COMPLIANCE EVALUATION INSPECTION
Evaluation Responsible Person Identifier: Not reported

MOUNTAIN CHEM INC (Continued) **1000321940**

Evaluation Responsible Sub-Organization: Not reported
Actual Return to Compliance Date: 19850826
Scheduled Compliance Date: 19850331
Date of Request: Not reported
Date Response Received: Not reported
Request Agency: Not reported
Former Citation: Not reported

Evaluation Date: 19850117
Evaluation Responsible Agency: EPA
Found Violation: No
Evaluation Type Description: COMPLIANCE SCHEDULE EVALUATION
Evaluation Responsible Person Identifier: Not reported
Evaluation Responsible Sub-Organization: Not reported
Actual Return to Compliance Date: Not reported
Scheduled Compliance Date: Not reported
Date of Request: Not reported
Date Response Received: Not reported
Request Agency: Not reported
Former Citation: Not reported

Evaluation Date: 19850226
Evaluation Responsible Agency: State
Found Violation: No
Evaluation Type Description: FINANCIAL RECORD REVIEW
Evaluation Responsible Person Identifier: COWAV
Evaluation Responsible Sub-Organization: S
Actual Return to Compliance Date: Not reported
Scheduled Compliance Date: Not reported
Date of Request: Not reported
Date Response Received: Not reported
Request Agency: Not reported
Former Citation: Not reported

Evaluation Date: 19860212
Evaluation Responsible Agency: State
Found Violation: No
Evaluation Type Description: COMPLIANCE EVALUATION INSPECTION
Evaluation Responsible Person Identifier: COJED
Evaluation Responsible Sub-Organization: S
Actual Return to Compliance Date: Not reported
Scheduled Compliance Date: Not reported
Date of Request: Not reported
Date Response Received: Not reported
Request Agency: Not reported
Former Citation: Not reported

Evaluation Date: 19841220
Evaluation Responsible Agency: EPA
Found Violation: Yes
Evaluation Type Description: COMPLIANCE SCHEDULE EVALUATION
Evaluation Responsible Person Identifier: Not reported
Evaluation Responsible Sub-Organization: Not reported
Actual Return to Compliance Date: 19850117
Scheduled Compliance Date: Not reported
Date of Request: Not reported
Date Response Received: Not reported

MOUNTAIN CHEM INC (Continued) **1000321940**

Request Agency: Not reported
Former Citation: Not reported

Evaluation Date: 19821105
Evaluation Responsible Agency: EPA
Found Violation: Yes
Evaluation Type Description: COMPLIANCE EVALUATION INSPECTION
Evaluation Responsible Person Identifier: Not reported
Evaluation Responsible Sub-Organization: Not reported
Actual Return to Compliance Date: 19850826
Scheduled Compliance Date: Not reported
Date of Request: Not reported
Date Response Received: Not reported
Request Agency: Not reported
Former Citation: Not reported

Evaluation Date: 19890825
Evaluation Responsible Agency: EPA-Initiated Oversight/Observation/Training Actions
Found Violation: No
Evaluation Type Description: FINANCIAL RECORD REVIEW
Evaluation Responsible Person Identifier: R8CL
Evaluation Responsible Sub-Organization: Not reported
Actual Return to Compliance Date: Not reported
Scheduled Compliance Date: Not reported
Date of Request: Not reported
Date Response Received: Not reported
Request Agency: Not reported
Former Citation: Not reported

Evaluation Date: 19860213
Evaluation Responsible Agency: EPA
Found Violation: No
Evaluation Type Description: COMPLIANCE SCHEDULE EVALUATION
Evaluation Responsible Person Identifier: R8MD
Evaluation Responsible Sub-Organization: Not reported
Actual Return to Compliance Date: Not reported
Scheduled Compliance Date: Not reported
Date of Request: Not reported
Date Response Received: Not reported
Request Agency: Not reported
Former Citation: Not reported

Evaluation Date: 19850826
Evaluation Responsible Agency: EPA-Initiated Oversight/Observation/Training Actions
Found Violation: No
Evaluation Type Description: COMPLIANCE EVALUATION INSPECTION
Evaluation Responsible Person Identifier: Not reported
Evaluation Responsible Sub-Organization: Not reported
Actual Return to Compliance Date: Not reported
Scheduled Compliance Date: Not reported
Date of Request: Not reported
Date Response Received: Not reported
Request Agency: Not reported
Former Citation: Not reported

Evaluation Date: 19880907
Evaluation Responsible Agency: State

MOUNTAIN CHEM INC (Continued) **1000321940**

Found Violation: No
Evaluation Type Description: COMPLIANCE EVALUATION INSPECTION
Evaluation Responsible Person Identifier: COJKI
Evaluation Responsible Sub-Organization: S
Actual Return to Compliance Date: Not reported
Scheduled Compliance Date: Not reported
Date of Request: Not reported
Date Response Received: Not reported
Request Agency: Not reported
Former Citation: Not reported

RAATS:
Entry No: 1

MOUNTAIN CHEM INC (Continued) **1000321940**

Facility ID:	COD040713562
Type:	Not reported
Docket No:	RCRA VIII 83-8
Region:	08
Issue Date:	Not reported
Final Date:	02/25/1983
Status:	Complaint Issued
Additional:	Not reported
Action ID:	606
Action:	3008 (A)
Violation No:	Not reported
Viol No Cited:	1 265.171
Total No Cited:	Not reported
Reg Type:	CFR
Prop. Penalty:	9,900.00
Final Penalty:	.00
Total Prop. Penalty:	50,200.00
Comments:	Not reported

Entry No:	1
Facility ID:	COD040713562
Type:	Not reported
Docket No:	RCRA VIII 83-8
Region:	08
Issue Date:	Not reported
Final Date:	02/25/1983
Status:	Complaint Issued
Additional:	Not reported
Action ID:	606
Action:	3008 (A)
Violation No:	Not reported
Viol No Cited:	2 265.173
Total No Cited:	Not reported
Reg Type:	CFR
Prop. Penalty:	*
Final Penalty:	.00
Total Prop. Penalty:	50,200.00
Comments:	Not reported

Entry No:	1
Facility ID:	COD040713562
Type:	Not reported
Docket No:	RCRA VIII 83-8
Region:	08
Issue Date:	Not reported
Final Date:	02/25/1983
Status:	Complaint Issued
Additional:	Not reported
Action ID:	606
Action:	3008 (A)
Violation No:	Not reported
Viol No Cited:	3 265.35
Total No Cited:	Not reported
Reg Type:	CFR
Prop. Penalty:	13,500.00
Final Penalty:	.00
Total Prop. Penalty:	50,200.00

MOUNTAIN CHEM INC (Continued) **1000321940**

Comments: Not reported

Entry No: 1
Facility ID: COD040713562
Type: Not reported
Docket No: RCRA VIII 83-8
Region: 08
Issue Date: Not reported
Final Date: 02/25/1983
Status: Complaint Issued
Additional: Not reported
Action ID: 606
Action: 3008 (A)
Violation No: Not reported
Viol No Cited: 4 265.176
Total No Cited: Not reported
Reg Type: CFR
Prop. Penalty: 4,300.00
Final Penalty: .00
Total Prop. Penalty: 50,200.00
Comments: Not reported

Entry No: 1
Facility ID: COD040713562
Type: Not reported
Docket No: RCRA VIII 83-8
Region: 08
Issue Date: Not reported
Final Date: 02/25/1983
Status: Complaint Issued
Additional: Not reported
Action ID: 606
Action: 3008 (A)
Violation No: Not reported
Viol No Cited: 5 265.198
Total No Cited: Not reported
Reg Type: CFR
Prop. Penalty: *
Final Penalty: .00
Total Prop. Penalty: 50,200.00
Comments: Not reported

Entry No: 1
Facility ID: COD040713562
Type: Not reported
Docket No: RCRA VIII 83-8
Region: 08
Issue Date: Not reported
Final Date: 02/25/1983
Status: Complaint Issued
Additional: Not reported
Action ID: 606
Action: 3008 (A)
Violation No: Not reported
Viol No Cited: 6 265.13(A)(1)
Total No Cited: Not reported
Reg Type: CFR

MOUNTAIN CHEM INC (Continued) **1000321940**

Prop. Penalty:	22,500.00
Final Penalty:	.00
Total Prop. Penalty:	50,200.00
Comments:	Not reported

Entry No:	1
Facility ID:	COD040713562
Type:	Not reported
Docket No:	RCRA VIII 83-8
Region:	08
Issue Date:	Not reported
Final Date:	02/25/1983
Status:	Complaint Issued
Additional:	Not reported
Action ID:	606
Action:	3008 (A)
Violation No:	Not reported
Viol No Cited:	7 265.147
Total No Cited:	Not reported
Reg Type:	CFR
Prop. Penalty:	*
Final Penalty:	.00
Total Prop. Penalty:	50,200.00
Comments:	Not reported

FINDS:

Registry ID:	110002965827

Click Here for FRS Facility Detail Report:

Environmental Interest/Information System:

The Resource Conservation and Recovery Act Information System (RCRAInfo) is EPA's comprehensive information system in support of the Resource Conservation and Recovery Act (RCRA) of 1976 and the Hazardous and Solid Waste Amendments (HSWA) of 1984. It tracks many types of information about generators, transporters, treaters, storers, and disposers of hazardous waste.
MN-TEMPO is the Minnesota Pollution Control Agency's (MPCA) permitting, compliance, and enforcement information management system, which facilitates the issuance of permits and manages compliance.

ECHO:

Envid:	1000321940
Registry ID:	110002965827
DFR URL:	http://echo.epa.gov/detailed-facility-report?fid=110002965827
Name:	MOUNTAIN CHEMICALS INC
Address:	16035 W 4TH AVE
City,State,Zip:	GOLDEN, CO 80401

28 East 1/2-1 0.766 mi. 4042 ft. | **STEVINSON TOYOTA WEST INC 15000 W. COLFAX AVE. GOLDEN, CO 80401** | **ECHO RCRA NonGen / NLR CORRACTS FINDS AST** | **1000433288 N/A**

Relative: Lower

Actual: 5785 ft.

CORRACTS:

Name: STEVINSON CHEVROLET WEST INC
Address: 15000 W COLFAX AVE
Address 2: Not reported
EPA ID: COD059257311
Area Name: ENTIRE FACILITY
Corrective Action: INVESTIGATION IMPOSITION
Actual Date: 20011207
Air Release Indicator: Not reported
Groundwater Release Indicator: Y
Soil Release Indicator: Not reported
Surface Water Release Indicator: Not reported

Name: STEVINSON CHEVROLET WEST INC
Address: 15000 W COLFAX AVE
Address 2: Not reported
EPA ID: COD059257311
Area Name: ENTIRE FACILITY
Corrective Action: INVESTIGATION SUPPLEMENTAL INFO REQ BY AGENCY
Actual Date: 20020102
Air Release Indicator: Not reported
Groundwater Release Indicator: Y
Soil Release Indicator: Not reported
Surface Water Release Indicator: Not reported

Name: STEVINSON CHEVROLET WEST INC
Address: 15000 W COLFAX AVE
Address 2: Not reported
EPA ID: COD059257311
Area Name: ENTIRE FACILITY
Corrective Action: INVESTIGATION SUPPLEMENTAL INFORMATION RECEIVED
Actual Date: 20020118
Air Release Indicator: Not reported
Groundwater Release Indicator: Y
Soil Release Indicator: Not reported
Surface Water Release Indicator: Not reported

Name: STEVINSON CHEVROLET WEST INC
Address: 15000 W COLFAX AVE
Address 2: Not reported
EPA ID: COD059257311
Area Name: ENTIRE FACILITY
Corrective Action: INVESTIGATION SUPPLEMENTAL INFO DEEMED SATISFACT
Actual Date: 20020122
Air Release Indicator: Not reported
Groundwater Release Indicator: Y
Soil Release Indicator: Not reported
Surface Water Release Indicator: Not reported

Name: STEVINSON CHEVROLET WEST INC
Address: 15000 W COLFAX AVE
Address 2: Not reported
EPA ID: COD059257311

STEVINSON TOYOTA WEST INC (Continued) **1000433288**

Area Name: ENTIRE FACILITY
Corrective Action: INVESTIGATION REPORT RECEIVED
Actual Date: 20011203
Air Release Indicator: Not reported
Groundwater Release Indicator: Y
Soil Release Indicator: Not reported
Surface Water Release Indicator: Not reported

Name: STEVINSON CHEVROLET WEST INC
Address: 15000 W COLFAX AVE
Address 2: Not reported
EPA ID: COD059257311
Area Name: ENTIRE FACILITY
Corrective Action: INVESTIGATION COMPLETE
Actual Date: 20020122
Air Release Indicator: Not reported
Groundwater Release Indicator: Y
Soil Release Indicator: Not reported
Surface Water Release Indicator: Not reported

Name: STEVINSON CHEVROLET WEST INC
Address: 15000 W COLFAX AVE
Address 2: Not reported
EPA ID: COD059257311
Area Name: ENTIRE FACILITY
Corrective Action: CA PROCESS IS TERMINATED
Actual Date: 20020122
Air Release Indicator: Not reported
Groundwater Release Indicator: Y
Soil Release Indicator: Not reported
Surface Water Release Indicator: Not reported

AST:
Name: STEVINSON CHEVROLET WEST INC
Address: 15000 W COLFAX AVE
City,State,Zip: LAKEWOOD 80401
Substance: LPG
Tank Tag: 1715-6
Facility ID: 1715
Owner Name: Stevinson Auto
Owner Address: 1726 Cole Blvd Ste 300, Lakewood, CO 80401
Owner City: Lakewood
Owner State: CO
Owner Zip: 80401
Facility Type: Non-Retail
Facility Category: Commercial/Industrial
Capacity: 1000
Tank Status: Permanently Closed
Date Tank Installed: 09/20/1996
Date Closed: 02/02/2009
Tank Type: LPG
Latitude: 39.730949
Longitude: -105.16725
Tank Material: Not reported
Tank Wall Type: Not reported
Piping Type: Not reported
Piping System: Not reported

STEVINSON TOYOTA WEST INC (Continued) **1000433288**

Piping Material: Not reported
Piping Wall Type: Not reported
Overfill Prevention: Not reported
Tank ID: a1J3h000001jr5h
Account Name: ACCT-10700

RCRA Listings:
Date Form Received by Agency: 20090506
Handler Name: Stevinson Chevrolet West Inc
Handler Address: W Colfax Ave
Handler City,State,Zip: GOLDEN, CO 80401
EPA ID: COD059257311
Contact Name: PATTY FORD
Contact Address: W COLFAX AVE
Contact City,State,Zip: GOLDEN, CO 80401
Contact Telephone: 303-232-2006
Contact Fax: Not reported
Contact Email: Not reported
Contact Title: Not reported
EPA Region: 08
Land Type: Private
Federal Waste Generator Description: Not a generator, verified
Non-Notifier: Not reported
Biennial Report Cycle: Not reported
Accessibility: Not reported
Active Site Indicator: Not reported
State District Owner: Not reported
State District: Not reported
Mailing Address: W COLFAX AVE
Mailing City,State,Zip: GOLDEN, CO 80401
Owner Name: C.E. Stevinson
Owner Type: Private
Operator Name: Stevinson Toyota West Inc
Operator Type: Private
Short-Term Generator Activity: No
Importer Activity: No
Mixed Waste Generator: No
Transporter Activity: No
Transfer Facility Activity: No
Recycler Activity with Storage: No
Small Quantity On-Site Burner Exemption: No
Smelting Melting and Refining Furnace Exemption: No
Underground Injection Control: No
Off-Site Waste Receipt: No
Universal Waste Indicator: No
Universal Waste Destination Facility: No
Federal Universal Waste: No
Active Site State-Reg Handler: ---
Federal Facility Indicator: Not reported
Hazardous Secondary Material Indicator: N
Sub-Part K Indicator: Not reported
2018 GPRA Permit Baseline: Not on the Baseline
2018 GPRA Renewals Baseline: Not on the Baseline
202 GPRA Corrective Action Baseline: No
Subject to Corrective Action Universe: No
Non-TSDFs Where RCRA CA has Been Imposed Universe: Yes
Corrective Action Priority Ranking: No NCAPS ranking

STEVINSON TOYOTA WEST INC (Continued) **1000433288**

Environmental Control Indicator: No
Institutional Control Indicator: No
Human Exposure Controls Indicator: N/A
Groundwater Controls Indicator: N/A
Significant Non-Complier Universe: No
Unaddressed Significant Non-Complier Universe: No
Addressed Significant Non-Complier Universe: No
Significant Non-Complier With a Compliance Schedule Universe: No
Financial Assurance Required: Not reported
Handler Date of Last Change: 20090514
Recognized Trader-Importer: No
Recognized Trader-Exporter: No
Importer of Spent Lead Acid Batteries: No
Exporter of Spent Lead Acid Batteries: No
Recycler Activity Without Storage: No
Manifest Broker: No
Sub-Part P Indicator: No

Hazardous Waste Summary:
Waste Code: D001
Waste Description: Ignitable Waste

Waste Code: F002
Waste Description: The Following Spent Halogenated Solvents: Tetrachloroethylene, Methylene Chloride, Trichloroethylene, 1,1,1-Trichloroethane, Chlorobenzene, 1,1,2-Trichloro-1,2,2-Trifluoroethane, Ortho-Dichlorobenzene, Trichlorofluoromethane, And 1,1,2, Trichloroethane; All Spent Solvent Mixtures/Blends Containing, Before Use, A Total Of Ten Percent Or More (By Volume) Of One Or More Of The Above Halogenated Solvents Or Those Solvents Listed In F001, F004, And F005; And Still Bottoms From The Recovery Of These Spent Solvents And Spent Solvent Mixtures.

Waste Code: F004
Waste Description: The Following Spent Nonhalogenated Solvents: Cresols, Cresylic Acid, And Nitrobenzene; And The Still Bottoms From The Recovery Of These Solvents; All Spent Solvent Mixtures/Blends Containing, Before Use, A Total Of Ten Percent Or More (By Volume) Of One Or More Of The Above Nonhalogenated Solvents Or Those Solvents Listed In F001, F002, And F005; And Still Bottoms From The Recovery Of These Spent Solvents And Spent Solvent Mixtures.

Handler - Owner Operator:
Owner/Operator Indicator: Owner
Owner/Operator Name: C.E. STEVINSON
Legal Status: Private
Date Became Current: 18000202
Date Ended Current: Not reported
Owner/Operator Address: DATA NOT REQUESTED
Owner/Operator City,State,Zip: DATA NOT REQUESTED, CO 99999
Owner/Operator Telephone: 999-999-9999
Owner/Operator Telephone Ext: Not reported
Owner/Operator Fax: Not reported
Owner/Operator Email: Not reported

STEVINSON TOYOTA WEST INC (Continued) **1000433288**

Owner/Operator Indicator: Owner
Owner/Operator Name: AUTOMOTIVE SERVICES INC
Legal Status: Private
Date Became Current: 18000202
Date Ended Current: Not reported
Owner/Operator Address: 1546 COLE BLVD STE 100
Owner/Operator City,State,Zip: GOLDEN, CO 80401
Owner/Operator Telephone: 303-234-0818
Owner/Operator Telephone Ext: Not reported
Owner/Operator Fax: Not reported
Owner/Operator Email: Not reported

Owner/Operator Indicator: Owner
Owner/Operator Name: C.E. STEVINSON
Legal Status: Private
Date Became Current: Not reported
Date Ended Current: Not reported
Owner/Operator Address: DATA NOT REQUESTED
Owner/Operator City,State,Zip: DATA NOT REQUESTED, CO 99999
Owner/Operator Telephone: 999-999-9999
Owner/Operator Telephone Ext: Not reported
Owner/Operator Fax: Not reported
Owner/Operator Email: Not reported

Owner/Operator Indicator: Owner
Owner/Operator Name: AUTOMOTIVE SERVICES INC
Legal Status: Private
Date Became Current: Not reported
Date Ended Current: Not reported
Owner/Operator Address: 1546 COLE BLVD STE 100
Owner/Operator City,State,Zip: GOLDEN, CO 80401
Owner/Operator Telephone: 303-234-0818
Owner/Operator Telephone Ext: Not reported
Owner/Operator Fax: Not reported
Owner/Operator Email: Not reported

Owner/Operator Indicator: Owner
Owner/Operator Name: AUTOMOTIVE SERVICES INC
Legal Status: Private
Date Became Current: 18000202
Date Ended Current: Not reported
Owner/Operator Address: 1546 COLE BLVD STE 100
Owner/Operator City,State,Zip: GOLDEN, CO 80401
Owner/Operator Telephone: 303-234-0818
Owner/Operator Telephone Ext: Not reported
Owner/Operator Fax: Not reported
Owner/Operator Email: Not reported

Owner/Operator Indicator: Owner
Owner/Operator Name: C.E. STEVINSON
Legal Status: Private
Date Became Current: 18000202
Date Ended Current: Not reported
Owner/Operator Address: DATA NOT REQUESTED
Owner/Operator City,State,Zip: DATA NOT REQUESTED, CO 99999
Owner/Operator Telephone: 999-999-9999
Owner/Operator Telephone Ext: Not reported

STEVINSON TOYOTA WEST INC (Continued) **1000433288**

Owner/Operator Fax: Not reported
Owner/Operator Email: Not reported

Owner/Operator Indicator: Operator
Owner/Operator Name: STEVINSON TOYOTA WEST INC
Legal Status: Private
Date Became Current: 20010101
Date Ended Current: Not reported
Owner/Operator Address: 15000 W COLFAX AVE
Owner/Operator City,State,Zip: GOLDEN, CO 80401
Owner/Operator Telephone: 999-999-9999
Owner/Operator Telephone Ext: Not reported
Owner/Operator Fax: Not reported
Owner/Operator Email: Not reported

Owner/Operator Indicator: Operator
Owner/Operator Name: STEVINSON TOYOTA WEST INC
Legal Status: Private
Date Became Current: 18000202
Date Ended Current: Not reported
Owner/Operator Address: DATA NOT REQUESTED
Owner/Operator City,State,Zip: DATA NOT REQUESTED, CO 99999
Owner/Operator Telephone: 999-999-9999
Owner/Operator Telephone Ext: Not reported
Owner/Operator Fax: Not reported
Owner/Operator Email: Not reported

Owner/Operator Indicator: Owner
Owner/Operator Name: C.E. STEVINSON
Legal Status: Private
Date Became Current: 18000202
Date Ended Current: Not reported
Owner/Operator Address: DATA NOT REQUESTED
Owner/Operator City,State,Zip: DATA NOT REQUESTED, CO 99999
Owner/Operator Telephone: 999-999-9999
Owner/Operator Telephone Ext: Not reported
Owner/Operator Fax: Not reported
Owner/Operator Email: Not reported

Owner/Operator Indicator: Owner
Owner/Operator Name: AUTOMOTIVE SERVICES INC
Legal Status: Private
Date Became Current: 18000202
Date Ended Current: Not reported
Owner/Operator Address: 1546 COLE BLVD STE 100
Owner/Operator City,State,Zip: GOLDEN, CO 80401
Owner/Operator Telephone: 303-234-0818
Owner/Operator Telephone Ext: Not reported
Owner/Operator Fax: Not reported
Owner/Operator Email: Not reported

Owner/Operator Indicator: Operator
Owner/Operator Name: AUTOMOTIVE SERVICES INC
Legal Status: Private
Date Became Current: 20010101
Date Ended Current: Not reported
Owner/Operator Address: 1546 COLE BLVD STE 100

STEVINSON TOYOTA WEST INC (Continued) **1000433288**

Owner/Operator City,State,Zip: GOLDEN, CO 80401
Owner/Operator Telephone: 303-234-0818
Owner/Operator Telephone Ext: Not reported
Owner/Operator Fax: Not reported
Owner/Operator Email: Not reported

Historic Generators:
Receive Date: 20000106
Handler Name: STEVINSON TOYOTA WEST INC
Federal Waste Generator Description: Small Quantity Generator
State District Owner: Not reported
Large Quantity Handler of Universal Waste: No
Recognized Trader Importer: No
Recognized Trader Exporter: No
Spent Lead Acid Battery Importer: No
Spent Lead Acid Battery Exporter: No
Current Record: No
Non Storage Recycler Activity: Not reported
Electronic Manifest Broker: Not reported

Receive Date: 20060414
Handler Name: STEVINSON TOYOTA WEST INC
Federal Waste Generator Description: Conditionally Exempt Small Quantity Generator
State District Owner: Not reported
Large Quantity Handler of Universal Waste: No
Recognized Trader Importer: No
Recognized Trader Exporter: No
Spent Lead Acid Battery Importer: No
Spent Lead Acid Battery Exporter: No
Current Record: No
Non Storage Recycler Activity: Not reported
Electronic Manifest Broker: Not reported

Receive Date: 20070129
Handler Name: STEVINSON CHEVROLET WEST INC
Federal Waste Generator Description: Conditionally Exempt Small Quantity Generator
State District Owner: Not reported
Large Quantity Handler of Universal Waste: No
Recognized Trader Importer: No
Recognized Trader Exporter: No
Spent Lead Acid Battery Importer: No
Spent Lead Acid Battery Exporter: No
Current Record: No
Non Storage Recycler Activity: Not reported
Electronic Manifest Broker: Not reported

Receive Date: 20090506
Handler Name: STEVINSON CHEVROLET WEST INC
Federal Waste Generator Description: Not a generator, verified
State District Owner: Not reported
Large Quantity Handler of Universal Waste: No
Recognized Trader Importer: No
Recognized Trader Exporter: No
Spent Lead Acid Battery Importer: No
Spent Lead Acid Battery Exporter: No
Current Record: Yes
Non Storage Recycler Activity: Not reported

STEVINSON TOYOTA WEST INC (Continued) **1000433288**

Electronic Manifest Broker: Not reported

List of NAICS Codes and Descriptions:
NAICS Code: 81111
NAICS Description: AUTOMOTIVE MECHANICAL AND ELECTRICAL REPAIR AND MAINTENANCE

Has the Facility Received Notices of Violations:
Found Violation: No
Agency Which Determined Violation: Not reported
Violation Short Description: Not reported
Date Violation was Determined: Not reported
Actual Return to Compliance Date: Not reported
Return to Compliance Qualifier: Not reported
Violation Responsible Agency: Not reported
Scheduled Compliance Date: Not reported
Enforcement Identifier: Not reported
Date of Enforcement Action: Not reported
Enforcement Responsible Agency: Not reported
Enforcement Docket Number: Not reported
Enforcement Attorney: Not reported
Corrective Action Component: Not reported
Appeal Initiated Date: Not reported
Appeal Resolution Date: Not reported
Disposition Status Date: Not reported
Disposition Status: Not reported
Disposition Status Description: Not reported
Consent/Final Order Sequence Number: Not reported
Consent/Final Order Respondent Name: Not reported
Consent/Final Order Lead Agency: Not reported
Enforcement Type: Not reported
Enforcement Responsible Person: Not reported
Enforcement Responsible Sub-Organization: Not reported
SEP Sequence Number: Not reported
SEP Expenditure Amount: Not reported
SEP Scheduled Completion Date: Not reported
SEP Actual Date: Not reported
SEP Defaulted Date: Not reported
SEP Type: Not reported
SEP Type Description: Not reported
Proposed Amount: Not reported
Final Monetary Amount: Not reported
Paid Amount: Not reported
Final Count: Not reported
Final Amount: Not reported

Found Violation: No
Agency Which Determined Violation: Not reported
Violation Short Description: Not reported
Date Violation was Determined: Not reported
Actual Return to Compliance Date: Not reported
Return to Compliance Qualifier: Not reported
Violation Responsible Agency: Not reported
Scheduled Compliance Date: Not reported
Enforcement Identifier: Not reported
Date of Enforcement Action: Not reported
Enforcement Responsible Agency: Not reported

STEVINSON TOYOTA WEST INC (Continued) **1000433288**

Enforcement Docket Number: Not reported
Enforcement Attorney: Not reported
Corrective Action Component: Not reported
Appeal Initiated Date: Not reported
Appeal Resolution Date: Not reported
Disposition Status Date: Not reported
Disposition Status: Not reported
Disposition Status Description: Not reported
Consent/Final Order Sequence Number: Not reported
Consent/Final Order Respondent Name: Not reported
Consent/Final Order Lead Agency: Not reported
Enforcement Type: Not reported
Enforcement Responsible Person: Not reported
Enforcement Responsible Sub-Organization: Not reported
SEP Sequence Number: Not reported
SEP Expenditure Amount: Not reported
SEP Scheduled Completion Date: Not reported
SEP Actual Date: Not reported
SEP Defaulted Date: Not reported
SEP Type: Not reported
SEP Type Description: Not reported
Proposed Amount: Not reported
Final Monetary Amount: Not reported
Paid Amount: Not reported
Final Count: Not reported
Final Amount: Not reported

Evaluation Action Summary:
Evaluation Date: 20020122
Evaluation Responsible Agency: State
Found Violation: No
Evaluation Type Description: FOCUSED COMPLIANCE INSPECTION
Evaluation Responsible Person Identifier: COCBR
Evaluation Responsible Sub-Organization: Not reported
Actual Return to Compliance Date: Not reported
Scheduled Compliance Date: Not reported
Date of Request: Not reported
Date Response Received: Not reported
Request Agency: Not reported
Former Citation: Not reported

Evaluation Date: 20011211
Evaluation Responsible Agency: State
Found Violation: No
Evaluation Type Description: FOCUSED COMPLIANCE INSPECTION
Evaluation Responsible Person Identifier: COCBR
Evaluation Responsible Sub-Organization: Not reported
Actual Return to Compliance Date: Not reported
Scheduled Compliance Date: Not reported
Date of Request: Not reported
Date Response Received: Not reported
Request Agency: Not reported
Former Citation: Not reported

FINDS:

STEVINSON TOYOTA WEST INC (Continued) **1000433288**

Registry ID: 110002967326

Click Here for FRS Facility Detail Report:

Environmental Interest/Information System:
The Resource Conservation and Recovery Act Information System (RCRAInfo) is EPA's comprehensive information system in support of the Resource Conservation and Recovery Act (RCRA) of 1976 and the Hazardous and Solid Waste Amendments (HSWA) of 1984. It tracks many types of information about generators, transporters, treaters, storers, and disposers of hazardous waste.

ECHO:
Envid: 1000433288
Registry ID: 110002967326
DFR URL: http://echo.epa.gov/detailed-facility-report?fid=110002967326
Name: STEVINSON TOYOTA WEST INC
Address: 15000 W. COLFAX AVE.
City,State,Zip: GOLDEN, CO 80401

---

29 WNW 1/2-1 0.859 mi. 4535 ft. | **AWESOME AUTOMOTIVE** | **17285 S GOLDEN RD** | **GOLDEN, CO 80401** | **CORRACTS** **FINDS** **ECHO** **RCRA NonGen / NLR** | **1001217823** **N/A**

Relative: Higher
Actual: 5842 ft.

CORRACTS:
Name: AWESOME AUTOMOTIVE
Address: 17285 S GOLDEN RD
Address 2: Not reported
EPA ID: COR000010710
Area Name: ENTIRE FACILITY
Corrective Action: AREA OF CONCERN
Actual Date: 19980608
Air Release Indicator: Not reported
Groundwater Release Indicator: Y
Soil Release Indicator: Y
Surface Water Release Indicator: Not reported

Name: AWESOME AUTOMOTIVE
Address: 17285 S GOLDEN RD
Address 2: Not reported
EPA ID: COR000010710
Area Name: ENTIRE FACILITY
Corrective Action: NOTICE OF CONTAMINATION
Actual Date: 19980608
Air Release Indicator: Not reported
Groundwater Release Indicator: Y
Soil Release Indicator: Y
Surface Water Release Indicator: Not reported

Name: AWESOME AUTOMOTIVE
Address: 17285 S GOLDEN RD
Address 2: Not reported
EPA ID: COR000010710
Area Name: ENTIRE FACILITY
Corrective Action: DETERMINATION OF NEED FOR AN INVESTIGATION-INVESTIGATION IS NOT NECESSARY
Actual Date: 19980610

AWESOME AUTOMOTIVE (Continued) **1001217823**

Air Release Indicator: Not reported
Groundwater Release Indicator: Y
Soil Release Indicator: Y
Surface Water Release Indicator: Not reported

Name: AWESOME AUTOMOTIVE
Address: 17285 S GOLDEN RD
Address 2: Not reported
EPA ID: COR000010710
Area Name: ENTIRE FACILITY
Corrective Action: INVESTIGATION IMPOSITION
Actual Date: 19980608
Air Release Indicator: Not reported
Groundwater Release Indicator: Y
Soil Release Indicator: Y
Surface Water Release Indicator: Not reported

Name: AWESOME AUTOMOTIVE
Address: 17285 S GOLDEN RD
Address 2: Not reported
EPA ID: COR000010710
Area Name: ENTIRE FACILITY
Corrective Action: REFERRED TO A NON-RCRA AUTHORITY-OTHER
Actual Date: 19980610
Air Release Indicator: Not reported
Groundwater Release Indicator: Y
Soil Release Indicator: Y
Surface Water Release Indicator: Not reported

Name: AWESOME AUTOMOTIVE
Address: 17285 S GOLDEN RD
Address 2: Not reported
EPA ID: COR000010710
Area Name: ENTIRE FACILITY
Corrective Action: CA PROCESS IS TERMINATED
Actual Date: 19980610
Air Release Indicator: Not reported
Groundwater Release Indicator: Y
Soil Release Indicator: Y
Surface Water Release Indicator: Not reported

RCRA Listings:
Date Form Received by Agency: 19980609
Handler Name: Awesome Automotive
Handler Address: S Golden Rd
Handler City,State,Zip: GOLDEN, CO 80401
EPA ID: COR000010710
Contact Name: TED DATA NOT REQUES
Contact Address: S GOLDEN RD
Contact City,State,Zip: GOLDEN, CO 80401
Contact Telephone: Not reported
Contact Fax: Not reported
Contact Email: Not reported
Contact Title: Not reported
EPA Region: 08
Land Type: Not reported
Federal Waste Generator Description: Not a generator, verified

AWESOME AUTOMOTIVE (Continued) **1001217823**

Non-Notifier: X
Biennial Report Cycle: Not reported
Accessibility: Not reported
Active Site Indicator: Not reported
State District Owner: Not reported
State District: Not reported
Mailing Address: S GOLDEN RD
Mailing City,State,Zip: GOLDEN, CO 80401
Owner Name: Data Not Requested
Owner Type: Private
Operator Name: Not reported
Operator Type: Not reported
Short-Term Generator Activity: No
Importer Activity: No
Mixed Waste Generator: No
Transporter Activity: No
Transfer Facility Activity: No
Recycler Activity with Storage: No
Small Quantity On-Site Burner Exemption: No
Smelting Melting and Refining Furnace Exemption: No
Underground Injection Control: No
Off-Site Waste Receipt: No
Universal Waste Indicator: No
Universal Waste Destination Facility: No
Federal Universal Waste: No
Active Site State-Reg Handler: ---
Federal Facility Indicator: Not reported
Hazardous Secondary Material Indicator: N
Sub-Part K Indicator: Not reported
2018 GPRA Permit Baseline: Not on the Baseline
2018 GPRA Renewals Baseline: Not on the Baseline
202 GPRA Corrective Action Baseline: No
Subject to Corrective Action Universe: No
Non-TSDFs Where RCRA CA has Been Imposed Universe: Yes
Corrective Action Priority Ranking: No NCAPS ranking
Environmental Control Indicator: No
Institutional Control Indicator: No
Human Exposure Controls Indicator: N/A
Groundwater Controls Indicator: N/A
Significant Non-Complier Universe: No
Unaddressed Significant Non-Complier Universe: No
Addressed Significant Non-Complier Universe: No
Significant Non-Complier With a Compliance Schedule Universe: No
Financial Assurance Required: Not reported
Handler Date of Last Change: 20141031
Recognized Trader-Importer: No
Recognized Trader-Exporter: No
Importer of Spent Lead Acid Batteries: No
Exporter of Spent Lead Acid Batteries: No
Recycler Activity Without Storage: No
Manifest Broker: No
Sub-Part P Indicator: No

Handler - Owner Operator:
Owner/Operator Indicator: Owner
Owner/Operator Name: DATA NOT REQUESTED

AWESOME AUTOMOTIVE (Continued) **1001217823**

Legal Status: Private
Date Became Current: Not reported
Date Ended Current: Not reported
Owner/Operator Address: 9999
Owner/Operator City,State,Zip: 99999 99999-9999
Owner/Operator Telephone: 999-999-9999
Owner/Operator Telephone Ext: Not reported
Owner/Operator Fax: Not reported
Owner/Operator Email: Not reported

Historic Generators:
Receive Date: 19980609
Handler Name: AWESOME AUTOMOTIVE
Federal Waste Generator Description: Not a generator, verified
State District Owner: Not reported
Large Quantity Handler of Universal Waste: No
Recognized Trader Importer: No
Recognized Trader Exporter: No
Spent Lead Acid Battery Importer: No
Spent Lead Acid Battery Exporter: No
Current Record: Yes
Non Storage Recycler Activity: Not reported
Electronic Manifest Broker: Not reported

List of NAICS Codes and Descriptions:
NAICS Codes: No NAICS Codes Found

Has the Facility Received Notices of Violations:
Found Violation: No
Agency Which Determined Violation: Not reported
Violation Short Description: Not reported
Date Violation was Determined: Not reported
Actual Return to Compliance Date: Not reported
Return to Compliance Qualifier: Not reported
Violation Responsible Agency: Not reported
Scheduled Compliance Date: Not reported
Enforcement Identifier: Not reported
Date of Enforcement Action: Not reported
Enforcement Responsible Agency: Not reported
Enforcement Docket Number: Not reported
Enforcement Attorney: Not reported
Corrective Action Component: Not reported
Appeal Initiated Date: Not reported
Appeal Resolution Date: Not reported
Disposition Status Date: Not reported
Disposition Status: Not reported
Disposition Status Description: Not reported
Consent/Final Order Sequence Number: Not reported
Consent/Final Order Respondent Name: Not reported
Consent/Final Order Lead Agency: Not reported
Enforcement Type: Not reported
Enforcement Responsible Person: Not reported
Enforcement Responsible Sub-Organization: Not reported
SEP Sequence Number: Not reported
SEP Expenditure Amount: Not reported
SEP Scheduled Completion Date: Not reported

AWESOME AUTOMOTIVE (Continued) **1001217823**

SEP Actual Date: Not reported
SEP Defaulted Date: Not reported
SEP Type: Not reported
SEP Type Description: Not reported
Proposed Amount: Not reported
Final Monetary Amount: Not reported
Paid Amount: Not reported
Final Count: Not reported
Final Amount: Not reported

Evaluation Action Summary:
Evaluation Date: 19980610
Evaluation Responsible Agency: State
Found Violation: No
Evaluation Type Description: FOCUSED COMPLIANCE INSPECTION
Evaluation Responsible Person Identifier: COWAV
Evaluation Responsible Sub-Organization: S
Actual Return to Compliance Date: Not reported
Scheduled Compliance Date: Not reported
Date of Request: Not reported
Date Response Received: Not reported
Request Agency: Not reported
Former Citation: Not reported

FINDS:
Registry ID: 110002999621

Click Here for FRS Facility Detail Report:

Environmental Interest/Information System:
The Resource Conservation and Recovery Act Information System (RCRAInfo) is EPA's comprehensive information system in support of the Resource Conservation and Recovery Act (RCRA) of 1976 and the Hazardous and Solid Waste Amendments (HSWA) of 1984. It tracks many types of information about generators, transporters, treaters, storers, and disposers of hazardous waste.

ECHO:
Envid: 1001217823
Registry ID: 110002999621
DFR URL: http://echo.epa.gov/detailed-facility-report?fid=110002999621
Name: AWESOME AUTOMOTIVE
Address: 17285 S. GOLDEN ROAD
City,State,Zip: GOLDEN, CO 80401

Count: 0 records.

ORPHAN SUMMARY

City	EDR ID	Site Name	Site Address	Zip	Database(s)
		NO SITES FOUND			

GOVERNMENT RECORDS SEARCHED / DATA CURRENCY TRACKING

To maintain currency of the following federal and state databases, EDR contacts the appropriate governmental agency on a monthly or quarterly basis, as required.

Number of Days to Update: Provides confirmation that EDR is reporting records that have been updated within 90 days from the date the government agency made the information available to the public.

STANDARD ENVIRONMENTAL RECORDS

Lists of Federal NPL (Superfund) sites

NPL: National Priority List

National Priorities List (Superfund). The NPL is a subset of CERCLIS and identifies over 1,200 sites for priority cleanup under the Superfund Program. NPL sites may encompass relatively large areas. As such, EDR provides polygon coverage for over 1,000 NPL site boundaries produced by EPA's Environmental Photographic Interpretation Center (EPIC) and regional EPA offices.

Date of Government Version: 09/25/2024
Date Data Arrived at EDR: 10/01/2024
Date Made Active in Reports: 10/23/2024
Number of Days to Update: 22

Source: EPA
Telephone: N/A
Last EDR Contact: 11/01/2024
Next Scheduled EDR Contact: 01/06/2025
Data Release Frequency: Quarterly

NPL Site Boundaries

Sources:

EPA's Environmental Photographic Interpretation Center (EPIC)
Telephone: 202-564-7333

EPA Region 1
Telephone 617-918-1143

EPA Region 3
Telephone 215-814-5418

EPA Region 4
Telephone 404-562-8033

EPA Region 5
Telephone 312-886-6686

EPA Region 10
Telephone 206-553-8665

EPA Region 6
Telephone: 214-655-6659

EPA Region 7
Telephone: 913-551-7247

EPA Region 8
Telephone: 303-312-6774

EPA Region 9
Telephone: 415-947-4246

Proposed NPL: Proposed National Priority List Sites

A site that has been proposed for listing on the National Priorities List through the issuance of a proposed rule in the Federal Register. EPA then accepts public comments on the site, responds to the comments, and places on the NPL those sites that continue to meet the requirements for listing.

Date of Government Version: 09/25/2024
Date Data Arrived at EDR: 10/01/2024
Date Made Active in Reports: 10/23/2024
Number of Days to Update: 22

Source: EPA
Telephone: N/A
Last EDR Contact: 11/01/2024
Next Scheduled EDR Contact: 01/06/2025
Data Release Frequency: Quarterly

Lists of Federal Delisted NPL sites

Delisted NPL: National Priority List Deletions

The National Oil and Hazardous Substances Pollution Contingency Plan (NCP) establishes the criteria that the EPA uses to delete sites from the NPL. In accordance with 40 CFR 300.425.(e), sites may be deleted from the NPL where no further response is appropriate.

Date of Government Version: 09/25/2024
Date Data Arrived at EDR: 10/01/2024
Date Made Active in Reports: 10/23/2024
Number of Days to Update: 22

Source: EPA
Telephone: N/A
Last EDR Contact: 11/01/2024
Next Scheduled EDR Contact: 01/06/2025
Data Release Frequency: Quarterly

Lists of Federal sites subject to CERCLA removals and CERCLA orders

SEMS: Superfund Enterprise Management System

SEMS (Superfund Enterprise Management System) tracks hazardous waste sites, potentially hazardous waste sites, and remedial activities performed in support of EPA's Superfund Program across the United States. The list was formerly know as CERCLIS, renamed to SEMS by the EPA in 2015. The list contains data on potentially hazardous waste sites that have been reported to the USEPA by states, municipalities, private companies and private persons, pursuant to Section 103 of the Comprehensive Environmental Response, Compensation, and Liability Act (CERCLA). This dataset also contains sites which are either proposed to or on the National Priorities List (NPL) and the sites which are in the screening and assessment phase for possible inclusion on the NPL.

Date of Government Version: 09/25/2024
Date Data Arrived at EDR: 10/01/2024
Date Made Active in Reports: 10/23/2024
Number of Days to Update: 22

Source: EPA
Telephone: 800-424-9346
Last EDR Contact: 11/01/2024
Next Scheduled EDR Contact: 01/20/2025
Data Release Frequency: Quarterly

Lists of Federal CERCLA sites with NFRAP

SEMS-ARCHIVE: Superfund Enterprise Management System Archive

SEMS-ARCHIVE (Superfund Enterprise Management System Archive) tracks sites that have no further interest under the Federal Superfund Program based on available information. The list was formerly known as the CERCLIS-NFRAP, renamed to SEMS ARCHIVE by the EPA in 2015. EPA may perform a minimal level of assessment work at a site while it is archived if site conditions change and/or new information becomes available. Archived sites have been removed and archived from the inventory of SEMS sites. Archived status indicates that, to the best of EPA's knowledge, assessment at a site has been completed and that EPA has determined no further steps will be taken to list the site on the National Priorities List (NPL), unless information indicates this decision was not appropriate or other considerations require a recommendation for listing at a later time. The decision does not necessarily mean that there is no hazard associated with a given site; it only means that. based upon available information, the location is not judged to be potential NPL site.

Date of Government Version: 09/25/2024
Date Data Arrived at EDR: 10/01/2024
Date Made Active in Reports: 10/23/2024
Number of Days to Update: 22

Source: EPA
Telephone: 800-424-9346
Last EDR Contact: 11/01/2024
Next Scheduled EDR Contact: 01/20/2025
Data Release Frequency: Quarterly

Lists of Federal RCRA facilities undergoing Corrective Action

CORRACTS: Corrective Action Report

CORRACTS identifies hazardous waste handlers with RCRA corrective action activity.

Date of Government Version: 06/03/2024
Date Data Arrived at EDR: 06/07/2024
Date Made Active in Reports: 06/20/2024
Number of Days to Update: 13

Source: EPA
Telephone: 800-424-9346
Last EDR Contact: 09/17/2024
Next Scheduled EDR Contact: 12/30/2024
Data Release Frequency: Quarterly

Lists of Federal RCRA TSD facilities

RCRA-TSDF: RCRA - Treatment, Storage and Disposal

RCRAInfo is EPA's comprehensive information system, providing access to data supporting the Resource Conservation and Recovery Act (RCRA) of 1976 and the Hazardous and Solid Waste Amendments (HSWA) of 1984. The database includes selective information on sites which generate, transport, store, treat and/or dispose of hazardous waste as defined by the Resource Conservation and Recovery Act (RCRA). Transporters are individuals or entities that move hazardous waste from the generator offsite to a facility that can recycle, treat, store, or dispose of the waste. TSDFs treat, store, or dispose of the waste.

Date of Government Version: 06/03/2024
Date Data Arrived at EDR: 06/07/2024
Date Made Active in Reports: 06/20/2024
Number of Days to Update: 13

Source: Environmental Protection Agency
Telephone: 303-312-6149
Last EDR Contact: 09/17/2024
Next Scheduled EDR Contact: 12/30/2024
Data Release Frequency: Quarterly

Lists of Federal RCRA generators

RCRA-LQG: RCRA - Large Quantity Generators

RCRAInfo is EPA's comprehensive information system, providing access to data supporting the Resource Conservation and Recovery Act (RCRA) of 1976 and the Hazardous and Solid Waste Amendments (HSWA) of 1984. The database includes selective information on sites which generate, transport, store, treat and/or dispose of hazardous waste as defined by the Resource Conservation and Recovery Act (RCRA). Large quantity generators (LQGs) generate over 1,000 kilograms (kg) of hazardous waste, or over 1 kg of acutely hazardous waste per month.

Date of Government Version: 06/03/2024
Date Data Arrived at EDR: 06/07/2024
Date Made Active in Reports: 06/20/2024
Number of Days to Update: 13

Source: Environmental Protection Agency
Telephone: 303-312-6149
Last EDR Contact: 09/17/2024
Next Scheduled EDR Contact: 12/30/2024
Data Release Frequency: Quarterly

RCRA-SQG: RCRA - Small Quantity Generators

RCRAInfo is EPA's comprehensive information system, providing access to data supporting the Resource Conservation and Recovery Act (RCRA) of 1976 and the Hazardous and Solid Waste Amendments (HSWA) of 1984. The database includes selective information on sites which generate, transport, store, treat and/or dispose of hazardous waste as defined by the Resource Conservation and Recovery Act (RCRA). Small quantity generators (SQGs) generate between 100 kg and 1,000 kg of hazardous waste per month.

Date of Government Version: 06/03/2024
Date Data Arrived at EDR: 06/07/2024
Date Made Active in Reports: 06/20/2024
Number of Days to Update: 13

Source: Environmental Protection Agency
Telephone: 303-312-6149
Last EDR Contact: 09/17/2024
Next Scheduled EDR Contact: 12/30/2024
Data Release Frequency: Quarterly

RCRA-VSQG: RCRA - Very Small Quantity Generators (Formerly Conditionally Exempt Small Quantity Generators)

RCRAInfo is EPA's comprehensive information system, providing access to data supporting the Resource Conservation and Recovery Act (RCRA) of 1976 and the Hazardous and Solid Waste Amendments (HSWA) of 1984. The database includes selective information on sites which generate, transport, store, treat and/or dispose of hazardous waste as defined by the Resource Conservation and Recovery Act (RCRA). Very small quantity generators (VSQGs) generate less than 100 kg of hazardous waste, or less than 1 kg of acutely hazardous waste per month.

Date of Government Version: 06/03/2024
Date Data Arrived at EDR: 06/07/2024
Date Made Active in Reports: 06/20/2024
Number of Days to Update: 13

Source: Environmental Protection Agency
Telephone: 303-312-6149
Last EDR Contact: 09/17/2024
Next Scheduled EDR Contact: 12/30/2024
Data Release Frequency: Quarterly

Federal institutional controls / engineering controls registries

US ENG CONTROLS: Engineering Controls Sites List

A listing of sites with engineering controls in place. Engineering controls include various forms of caps, building foundations, liners, and treatment methods to create pathway elimination for regulated substances to enter environmental media or effect human health.

Date of Government Version: 07/24/2024
Date Data Arrived at EDR: 08/08/2024
Date Made Active in Reports: 08/15/2024
Number of Days to Update: 7

Source: Environmental Protection Agency
Telephone: 703-603-0695
Last EDR Contact: 08/08/2024
Next Scheduled EDR Contact: 12/02/2024
Data Release Frequency: Varies

US INST CONTROLS: Institutional Controls Sites List

A listing of sites with institutional controls in place. Institutional controls include administrative measures, such as groundwater use restrictions, construction restrictions, property use restrictions, and post remediation care requirements intended to prevent exposure to contaminants remaining on site. Deed restrictions are generally required as part of the institutional controls.

Date of Government Version: 07/24/2024
Date Data Arrived at EDR: 08/08/2024
Date Made Active in Reports: 08/15/2024
Number of Days to Update: 7

Source: Environmental Protection Agency
Telephone: 703-603-0695
Last EDR Contact: 08/08/2024
Next Scheduled EDR Contact: 12/02/2024
Data Release Frequency: Varies

Federal ERNS list

ERNS: Emergency Response Notification System

Emergency Response Notification System. ERNS records and stores information on reported releases of oil and hazardous substances.

Date of Government Version: 06/11/2024
Date Data Arrived at EDR: 06/17/2024
Date Made Active in Reports: 09/04/2024
Number of Days to Update: 79

Source: National Response Center, United States Coast Guard
Telephone: 202-267-2180
Last EDR Contact: 09/17/2024
Next Scheduled EDR Contact: 12/30/2024
Data Release Frequency: Quarterly

Lists of state- and tribal hazardous waste facilities

SHWS: This state does not maintain a SHWS list. See the Federal CERCLIS list and Federal NPL list.

State Hazardous Waste Sites. State hazardous waste site records are the states' equivalent to CERCLIS. These sites may or may not already be listed on the federal CERCLIS list. Priority sites planned for cleanup using state funds (state equivalent of Superfund) are identified along with sites where cleanup will be paid for by potentially responsible parties. Available information varies by state.

Date of Government Version: N/A
Date Data Arrived at EDR: N/A
Date Made Active in Reports: N/A
Number of Days to Update: N/A

Source: Department of Public Health & Environment
Telephone: 303-692-3300
Last EDR Contact: 08/06/2024
Next Scheduled EDR Contact: 11/18/2024
Data Release Frequency: N/A

Lists of state and tribal landfills and solid waste disposal facilities

SWF/LF: Solid Waste Sites & Facilities

Solid Waste Facilities/Landfill Sites. SWF/LF type records typically contain an inventory of solid waste disposal facilities or landfills in a particular state. Depending on the state, these may be active or inactive facilities or open dumps that failed to meet RCRA Subtitle D Section 4004 criteria for solid waste landfills or disposal sites.

Date of Government Version: 05/15/2024
Date Data Arrived at EDR: 05/16/2024
Date Made Active in Reports: 08/12/2024
Number of Days to Update: 88

Source: Department of Public Health & Environment
Telephone: 303-692-3300
Last EDR Contact: 08/08/2024
Next Scheduled EDR Contact: 11/18/2024
Data Release Frequency: Varies

SHWF: Solid Waste Information System Listing

A listing from the Solid Waste Information System, which is used to help administer the various programs of our solid waste and materials management program. It includes a wide variety of types of facilities and sites, and includes information obtained over several decades and numerous legacy data systems.

Date of Government Version: 07/01/2024
Date Data Arrived at EDR: 07/25/2024
Date Made Active in Reports: 08/07/2024
Number of Days to Update: 13

Source: Department of Public Health & Environment
Telephone: 303-692-6349
Last EDR Contact: 10/24/2024
Next Scheduled EDR Contact: 02/10/2025
Data Release Frequency: Varies

GOVERNMENT RECORDS SEARCHED / DATA CURRENCY TRACKING

Lists of state and tribal leaking storage tanks

LUST: Leaking Underground Storage Tank List

Leaking Underground Storage Tank Incident Reports. LUST records contain an inventory of reported leaking underground storage tank incidents. Not all states maintain these records, and the information stored varies by state.

Date of Government Version: 03/01/2018
Date Data Arrived at EDR: 03/07/2018
Date Made Active in Reports: 04/03/2018
Number of Days to Update: 27

Source: Department of Labor and Employment, Oil Inspection Section
Telephone: 303-318-8521
Last EDR Contact: 03/07/2018
Next Scheduled EDR Contact: 06/18/2018
Data Release Frequency: Quarterly

LAST: Leaking Aboveground Storage Tank Listing

A listing of leaking aboveground storage tank sites. This list is no longer maintained. For current Leaking AST information, please see LTANKS.

Date of Government Version: 03/01/2018
Date Data Arrived at EDR: 03/07/2018
Date Made Active in Reports: 04/03/2018
Number of Days to Update: 27

Source: Department of Labor & Employment
Telephone: 303-318-8525
Last EDR Contact: 05/31/2018
Next Scheduled EDR Contact: 09/10/2018
Data Release Frequency: No Update Planned

LTANKS: Petroleum Release Events Listing

Active and Closed OPS Petroleum Release Events in Colorado. Includes the OPS Open Event locations, but also shows locations of closed events (releases that have been issued a No Further Action determination).

Date of Government Version: 05/01/2024
Date Data Arrived at EDR: 05/29/2024
Date Made Active in Reports: 08/19/2024
Number of Days to Update: 82

Source: Department of Labor & Employment
Telephone: 303-318-8525
Last EDR Contact: 08/22/2024
Next Scheduled EDR Contact: 12/09/2024
Data Release Frequency: Quarterly

INDIAN LUST R6: Leaking Underground Storage Tanks on Indian Land

LUSTs on Indian land in New Mexico and Oklahoma.

Date of Government Version: 05/07/2024
Date Data Arrived at EDR: 05/30/2024
Date Made Active in Reports: 08/28/2024
Number of Days to Update: 90

Source: EPA Region 6
Telephone: 214-665-6597
Last EDR Contact: 10/16/2024
Next Scheduled EDR Contact: 01/27/2025
Data Release Frequency: Varies

INDIAN LUST R10: Leaking Underground Storage Tanks on Indian Land

LUSTs on Indian land in Alaska, Idaho, Oregon and Washington.

Date of Government Version: 05/07/2024
Date Data Arrived at EDR: 05/30/2024
Date Made Active in Reports: 08/28/2024
Number of Days to Update: 90

Source: EPA Region 10
Telephone: 206-553-2857
Last EDR Contact: 10/16/2024
Next Scheduled EDR Contact: 01/27/2025
Data Release Frequency: Varies

INDIAN LUST R1: Leaking Underground Storage Tanks on Indian Land

A listing of leaking underground storage tank locations on Indian Land.

Date of Government Version: 05/07/2024
Date Data Arrived at EDR: 05/30/2024
Date Made Active in Reports: 08/28/2024
Number of Days to Update: 90

Source: EPA Region 1
Telephone: 617-918-1313
Last EDR Contact: 10/16/2024
Next Scheduled EDR Contact: 01/27/2025
Data Release Frequency: Varies

INDIAN LUST R5: Leaking Underground Storage Tanks on Indian Land
Leaking underground storage tanks located on Indian Land in Michigan, Minnesota and Wisconsin.

Date of Government Version: 04/11/2024
Date Data Arrived at EDR: 05/30/2024
Date Made Active in Reports: 08/28/2024
Number of Days to Update: 90

Source: EPA, Region 5
Telephone: 312-886-7439
Last EDR Contact: 10/16/2024
Next Scheduled EDR Contact: 01/27/2025
Data Release Frequency: Varies

INDIAN LUST R4: Leaking Underground Storage Tanks on Indian Land
LUSTs on Indian land in Florida, Mississippi and North Carolina.

Date of Government Version: 05/07/2024
Date Data Arrived at EDR: 05/30/2024
Date Made Active in Reports: 08/28/2024
Number of Days to Update: 90

Source: EPA Region 4
Telephone: 404-562-8677
Last EDR Contact: 10/16/2024
Next Scheduled EDR Contact: 01/27/2025
Data Release Frequency: Varies

INDIAN LUST R9: Leaking Underground Storage Tanks on Indian Land
LUSTs on Indian land in Arizona, California, New Mexico and Nevada

Date of Government Version: 05/07/2024
Date Data Arrived at EDR: 05/30/2024
Date Made Active in Reports: 08/28/2024
Number of Days to Update: 90

Source: Environmental Protection Agency
Telephone: 415-972-3372
Last EDR Contact: 10/16/2024
Next Scheduled EDR Contact: 01/27/2025
Data Release Frequency: Varies

INDIAN LUST R7: Leaking Underground Storage Tanks on Indian Land
LUSTs on Indian land in Iowa, Kansas, and Nebraska

Date of Government Version: 05/07/2024
Date Data Arrived at EDR: 05/30/2024
Date Made Active in Reports: 08/28/2024
Number of Days to Update: 90

Source: EPA Region 7
Telephone: 913-551-7003
Last EDR Contact: 10/16/2024
Next Scheduled EDR Contact: 01/27/2025
Data Release Frequency: Varies

INDIAN LUST R8: Leaking Underground Storage Tanks on Indian Land
LUSTs on Indian land in Colorado, Montana, North Dakota, South Dakota, Utah and Wyoming.

Date of Government Version: 05/07/2024
Date Data Arrived at EDR: 05/30/2024
Date Made Active in Reports: 08/28/2024
Number of Days to Update: 90

Source: EPA Region 8
Telephone: 303-312-6271
Last EDR Contact: 10/16/2024
Next Scheduled EDR Contact: 01/27/2025
Data Release Frequency: Varies

Lists of state and tribal registered storage tanks

UST: Underground Storage Tank Database
Registered Underground Storage Tanks. UST's are regulated under Subtitle I of the Resource Conservation and Recovery Act (RCRA) and must be registered with the state department responsible for administering the UST program. Available information varies by state program.

Date of Government Version: 05/23/2024
Date Data Arrived at EDR: 05/24/2024
Date Made Active in Reports: 05/28/2024
Number of Days to Update: 4

Source: Department of Labor and Employment, Oil Inspection Section
Telephone: 303-318-8521
Last EDR Contact: 08/20/2024
Next Scheduled EDR Contact: 12/09/2024
Data Release Frequency: Quarterly

AST: Aboveground Tank List
Aboveground storage tank locations.

Date of Government Version: 05/23/2024
Date Data Arrived at EDR: 05/24/2024
Date Made Active in Reports: 05/28/2024
Number of Days to Update: 4

Source: Department of Labor and Employment, Oil Inspection Section
Telephone: 303-318-8521
Last EDR Contact: 08/20/2024
Next Scheduled EDR Contact: 12/09/2024
Data Release Frequency: Semi-Annually

INDIAN UST R5: Underground Storage Tanks on Indian Land

The Indian Underground Storage Tank (UST) database provides information about underground storage tanks on Indian land in EPA Region 5 (Michigan, Minnesota and Wisconsin and Tribal Nations).

Date of Government Version: 04/11/2024
Date Data Arrived at EDR: 05/30/2024
Date Made Active in Reports: 08/28/2024
Number of Days to Update: 90

Source: EPA Region 5
Telephone: 312-886-6136
Last EDR Contact: 10/16/2024
Next Scheduled EDR Contact: 01/27/2025
Data Release Frequency: Varies

INDIAN UST R6: Underground Storage Tanks on Indian Land

The Indian Underground Storage Tank (UST) database provides information about underground storage tanks on Indian land in EPA Region 6 (Louisiana, Arkansas, Oklahoma, New Mexico, Texas and 65 Tribes).

Date of Government Version: 05/14/2024
Date Data Arrived at EDR: 05/30/2024
Date Made Active in Reports: 08/28/2024
Number of Days to Update: 90

Source: EPA Region 6
Telephone: 214-665-7591
Last EDR Contact: 10/16/2024
Next Scheduled EDR Contact: 01/27/2025
Data Release Frequency: Varies

INDIAN UST R10: Underground Storage Tanks on Indian Land

The Indian Underground Storage Tank (UST) database provides information about underground storage tanks on Indian land in EPA Region 10 (Alaska, Idaho, Oregon, Washington, and Tribal Nations).

Date of Government Version: 05/14/2024
Date Data Arrived at EDR: 05/30/2024
Date Made Active in Reports: 08/28/2024
Number of Days to Update: 90

Source: EPA Region 10
Telephone: 206-553-2857
Last EDR Contact: 10/16/2024
Next Scheduled EDR Contact: 01/27/2025
Data Release Frequency: Varies

INDIAN UST R4: Underground Storage Tanks on Indian Land

The Indian Underground Storage Tank (UST) database provides information about underground storage tanks on Indian land in EPA Region 4 (Alabama, Florida, Georgia, Kentucky, Mississippi, North Carolina, South Carolina, Tennessee and Tribal Nations)

Date of Government Version: 05/14/2024
Date Data Arrived at EDR: 05/30/2024
Date Made Active in Reports: 08/28/2024
Number of Days to Update: 90

Source: EPA Region 4
Telephone: 404-562-9424
Last EDR Contact: 10/16/2024
Next Scheduled EDR Contact: 07/29/2024
Data Release Frequency: Varies

INDIAN UST R9: Underground Storage Tanks on Indian Land

The Indian Underground Storage Tank (UST) database provides information about underground storage tanks on Indian land in EPA Region 9 (Arizona, California, Hawaii, Nevada, the Pacific Islands, and Tribal Nations).

Date of Government Version: 05/14/2024
Date Data Arrived at EDR: 05/30/2024
Date Made Active in Reports: 08/28/2024
Number of Days to Update: 90

Source: EPA Region 9
Telephone: 415-972-3368
Last EDR Contact: 10/16/2024
Next Scheduled EDR Contact: 01/27/2025
Data Release Frequency: Varies

INDIAN UST R8: Underground Storage Tanks on Indian Land

The Indian Underground Storage Tank (UST) database provides information about underground storage tanks on Indian land in EPA Region 8 (Colorado, Montana, North Dakota, South Dakota, Utah, Wyoming and 27 Tribal Nations).

Date of Government Version: 05/14/2024
Date Data Arrived at EDR: 05/30/2024
Date Made Active in Reports: 08/28/2024
Number of Days to Update: 90

Source: EPA Region 8
Telephone: 303-312-6137
Last EDR Contact: 10/16/2024
Next Scheduled EDR Contact: 01/27/2025
Data Release Frequency: Varies

INDIAN UST R1: Underground Storage Tanks on Indian Land

The Indian Underground Storage Tank (UST) database provides information about underground storage tanks on Indian land in EPA Region 1 (Connecticut, Maine, Massachusetts, New Hampshire, Rhode Island, Vermont and ten Tribal Nations).

Date of Government Version: 05/14/2024
Date Data Arrived at EDR: 05/30/2024
Date Made Active in Reports: 08/28/2024
Number of Days to Update: 90

Source: EPA, Region 1
Telephone: 617-918-1313
Last EDR Contact: 10/16/2024
Next Scheduled EDR Contact: 01/27/2025
Data Release Frequency: Varies

INDIAN UST R7: Underground Storage Tanks on Indian Land

The Indian Underground Storage Tank (UST) database provides information about underground storage tanks on Indian land in EPA Region 7 (Iowa, Kansas, Missouri, Nebraska, and 9 Tribal Nations).

Date of Government Version: 05/14/2024
Date Data Arrived at EDR: 05/30/2024
Date Made Active in Reports: 08/28/2024
Number of Days to Update: 90

Source: EPA Region 7
Telephone: 913-551-7003
Last EDR Contact: 10/16/2024
Next Scheduled EDR Contact: 01/27/2025
Data Release Frequency: Varies

State and tribal institutional control / engineering control registries

AUL: Environmental Real Covenants List

Senate Bill 01-145 gave authority to the Colorado Department of Public Health and Environment to approve requests to restrict the future use of a property using an enforceable agreement called an environmental covenant. When a contaminated site is not cleaned up completely, land use restrictions may be used to ensure that the selected cleanup remedy is adequately protective of human health and the environment.

Date of Government Version: 07/18/2024
Date Data Arrived at EDR: 07/19/2024
Date Made Active in Reports: 10/08/2024
Number of Days to Update: 81

Source: Department of Public Health & Environment
Telephone: 303-692-3331
Last EDR Contact: 10/17/2024
Next Scheduled EDR Contact: 02/03/2025
Data Release Frequency: Varies

Lists of state and tribal voluntary cleanup sites

INDIAN VCP R1: Voluntary Cleanup Priority Listing

A listing of voluntary cleanup priority sites located on Indian Land located in Region 1.

Date of Government Version: 07/27/2015
Date Data Arrived at EDR: 09/29/2015
Date Made Active in Reports: 02/18/2016
Number of Days to Update: 142

Source: EPA, Region 1
Telephone: 617-918-1102
Last EDR Contact: 09/10/2024
Next Scheduled EDR Contact: 12/30/2024
Data Release Frequency: Varies

VCP: Voluntary Cleanup & Redevelopment Act Application Tracking Report

The Voluntary Cleanup and Redevelopment Act is intended to permit and encourage voluntary cleanups by providing a method to determine clean-up responsibilities in planning the reuse of property. The VCRA was intended for sites which were not covered by existing regulatory programs.

Date of Government Version: 07/01/2024
Date Data Arrived at EDR: 07/02/2024
Date Made Active in Reports: 09/25/2024
Number of Days to Update: 85

Source: Department of Public Health and Environmental
Telephone: 303-692-3331
Last EDR Contact: 10/01/2024
Next Scheduled EDR Contact: 01/13/2025
Data Release Frequency: Semi-Annually

INDIAN VCP R7: Voluntary Cleanup Priority Lisitng
A listing of voluntary cleanup priority sites located on Indian Land located in Region 7.

Date of Government Version: 03/20/2008
Date Data Arrived at EDR: 04/22/2008
Date Made Active in Reports: 05/19/2008
Number of Days to Update: 27

Source: EPA, Region 7
Telephone: 913-551-7365
Last EDR Contact: 07/08/2021
Next Scheduled EDR Contact: 07/20/2009
Data Release Frequency: Varies

Lists of state and tribal brownfield sites

BROWNFIELDS: Brownfields Sites Listing
Brownfields Sites Listing

Date of Government Version: 07/15/2024
Date Data Arrived at EDR: 07/16/2024
Date Made Active in Reports: 09/27/2024
Number of Days to Update: 73

Source: Department of Public Health & Environment
Telephone: 303-692-3331
Last EDR Contact: 10/16/2024
Next Scheduled EDR Contact: 01/27/2025
Data Release Frequency: Varies

ADDITIONAL ENVIRONMENTAL RECORDS

Local Brownfield lists

US BROWNFIELDS: A Listing of Brownfields Sites
Brownfields are real property, the expansion, redevelopment, or reuse of which may be complicated by the presence or potential presence of a hazardous substance, pollutant, or contaminant. Cleaning up and reinvesting in these properties takes development pressures off of undeveloped, open land, and both improves and protects the environment. Assessment, Cleanup and Redevelopment Exchange System (ACRES) stores information reported by EPA Brownfields grant recipients on brownfields properties assessed or cleaned up with grant funding as well as information on Targeted Brownfields Assessments performed by EPA Regions. A listing of ACRES Brownfield sites is obtained from Cleanups in My Community. Cleanups in My Community provides information on Brownfields properties for which information is reported back to EPA, as well as areas served by Brownfields grant programs.

Date of Government Version: 06/10/2024
Date Data Arrived at EDR: 06/11/2024
Date Made Active in Reports: 09/04/2024
Number of Days to Update: 85

Source: Environmental Protection Agency
Telephone: 202-566-2777
Last EDR Contact: 09/11/2024
Next Scheduled EDR Contact: 12/23/2024
Data Release Frequency: Semi-Annually

Local Lists of Landfill / Solid Waste Disposal Sites

HISTORICAL LANDFILL: Historical Landfill List
Abandoned/Inactive Landfills.

Date of Government Version: 01/31/1993
Date Data Arrived at EDR: 04/24/1994
Date Made Active in Reports: 05/30/1994
Number of Days to Update: 36

Source: Department of Public Health & Environment
Telephone: 303-692-3300
Last EDR Contact: 09/05/1996
Next Scheduled EDR Contact: N/A
Data Release Frequency: No Update Planned

INDIAN ODI: Report on the Status of Open Dumps on Indian Lands
Location of open dumps on Indian land.

Date of Government Version: 12/31/1998
Date Data Arrived at EDR: 12/03/2007
Date Made Active in Reports: 01/24/2008
Number of Days to Update: 52

Source: Environmental Protection Agency
Telephone: 703-308-8245
Last EDR Contact: 10/17/2024
Next Scheduled EDR Contact: 02/03/2025
Data Release Frequency: Varies

IHS OPEN DUMPS: Open Dumps on Indian Land
A listing of all open dumps located on Indian Land in the United States.

Date of Government Version: 04/01/2014
Date Data Arrived at EDR: 08/06/2014
Date Made Active in Reports: 01/29/2015
Number of Days to Update: 176

Source: Department of Health & Human Serivces, Indian Health Service
Telephone: 301-443-1452
Last EDR Contact: 10/10/2024
Next Scheduled EDR Contact: 02/03/2025
Data Release Frequency: Varies

DENVER CO HIST FILL: Denver City & County Historic Fill Areas
This dataset denotes the approximate locations of historical fill areas within the City and County of Denver (CCoD) and with within approximately three-quarters of a mile of the CCoD boundaries. The data is of a general nature and obtained from historic and current documents that may not be accurate or precise.

Date of Government Version: 05/22/2024
Date Data Arrived at EDR: 07/02/2024
Date Made Active in Reports: 09/24/2024
Number of Days to Update: 84

Source: City & County of Denver
Telephone: 720-913-5237
Last EDR Contact: 10/03/2024
Next Scheduled EDR Contact: 01/13/2025
Data Release Frequency: No Update Planned

Local Lists of Hazardous waste / Contaminated Sites

CDL: Meth Lab Locations
Meth lab locations that were reported to the Department of Public Health & Environment.

Date of Government Version: 06/06/2024
Date Data Arrived at EDR: 06/27/2024
Date Made Active in Reports: 09/20/2024
Number of Days to Update: 85

Source: Department of Public Health and Environment
Telephone: 303-692-3023
Last EDR Contact: 09/18/2024
Next Scheduled EDR Contact: 01/06/2025
Data Release Frequency: Quarterly

US CDL: Clandestine Drug Labs
A listing of clandestine drug lab locations. The U.S. Department of Justice ("the Department") provides this web site as a public service. It contains addresses of some locations where law enforcement agencies reported they found chemicals or other items that indicated the presence of either clandestine drug laboratories or dumpsites. In most cases, the source of the entries is not the Department, and the Department has not verified the entry and does not guarantee its accuracy. Members of the public must verify the accuracy of all entries by, for example, contacting local law enforcement and local health departments.

Date of Government Version: 05/20/2024
Date Data Arrived at EDR: 08/19/2024
Date Made Active in Reports: 10/09/2024
Number of Days to Update: 51

Source: Drug Enforcement Administration
Telephone: 202-307-1000
Last EDR Contact: 08/19/2024
Next Scheduled EDR Contact: 12/02/2024
Data Release Frequency: Quarterly

Records of Emergency Release Reports

SPILLS 2: Spills
A listing of spills reported to the Oil & Gas Conservation Commission

Date of Government Version: 06/17/2024
Date Data Arrived at EDR: 06/18/2024
Date Made Active in Reports: 09/10/2024
Number of Days to Update: 84

Source: Oil & Gas Conservation Commission
Telephone: 303-894-2100
Last EDR Contact: 09/19/2024
Next Scheduled EDR Contact: 12/30/2024
Data Release Frequency: Quarterly

CO ERNS: Spills Database
State reported spills.

Date of Government Version: 06/06/2024
Date Data Arrived at EDR: 06/27/2024
Date Made Active in Reports: 09/20/2024
Number of Days to Update: 85

Source: Department of Public Health and Environmental
Telephone: 303-692-2000
Last EDR Contact: 09/18/2024
Next Scheduled EDR Contact: 01/06/2025
Data Release Frequency: Quarterly

Other Ascertainable Records

RCRA NonGen / NLR: RCRA - Non Generators / No Longer Regulated

RCRAInfo is EPA's comprehensive information system, providing access to data supporting the Resource Conservation and Recovery Act (RCRA) of 1976 and the Hazardous and Solid Waste Amendments (HSWA) of 1984. The database includes selective information on sites which generate, transport, store, treat and/or dispose of hazardous waste as defined by the Resource Conservation and Recovery Act (RCRA). Non-Generators do not presently generate hazardous waste.

Date of Government Version: 06/03/2024
Date Data Arrived at EDR: 06/07/2024
Date Made Active in Reports: 06/20/2024
Number of Days to Update: 13

Source: Environmental Protection Agency
Telephone: 303-312-6149
Last EDR Contact: 09/17/2024
Next Scheduled EDR Contact: 12/30/2024
Data Release Frequency: Quarterly

FEDLAND: Federal and Indian Lands

Federally and Indian administrated lands of the United States. Lands included are administrated by: Army Corps of Engineers, Bureau of Reclamation, National Wild and Scenic River, National Wildlife Refuge, Public Domain Land, Wilderness, Wilderness Study Area, Wildlife Management Area, Bureau of Indian Affairs, Bureau of Land Management, Department of Justice, Forest Service, Fish and Wildlife Service, National Park Service.

Date of Government Version: 04/02/2018
Date Data Arrived at EDR: 04/11/2018
Date Made Active in Reports: 11/06/2019
Number of Days to Update: 574

Source: U.S. Geological Survey
Telephone: 888-275-8747
Last EDR Contact: 10/03/2024
Next Scheduled EDR Contact: 01/13/2025
Data Release Frequency: N/A

TSCA: Toxic Substances Control Act

Toxic Substances Control Act. TSCA identifies manufacturers and importers of chemical substances included on the TSCA Chemical Substance Inventory list. It includes data on the production volume of these substances by plant site.

Date of Government Version: 12/31/2020
Date Data Arrived at EDR: 06/14/2022
Date Made Active in Reports: 03/24/2023
Number of Days to Update: 283

Source: EPA
Telephone: 202-260-5521
Last EDR Contact: 10/03/2024
Next Scheduled EDR Contact: 12/23/2024
Data Release Frequency: Every 4 Years

TRIS: Toxic Chemical Release Inventory System

Toxic Release Inventory System. TRIS identifies facilities which release toxic chemicals to the air, water and land in reportable quantities under SARA Title III Section 313.

Date of Government Version: 12/31/2022
Date Data Arrived at EDR: 11/13/2023
Date Made Active in Reports: 02/07/2024
Number of Days to Update: 86

Source: EPA
Telephone: 202-566-0250
Last EDR Contact: 09/25/2024
Next Scheduled EDR Contact: 01/06/2025
Data Release Frequency: Annually

ROD: Records Of Decision

Record of Decision. ROD documents mandate a permanent remedy at an NPL (Superfund) site containing technical and health information to aid in the cleanup.

Date of Government Version: 08/27/2024
Date Data Arrived at EDR: 09/03/2024
Date Made Active in Reports: 09/19/2024
Number of Days to Update: 16

Source: EPA
Telephone: 703-416-0223
Last EDR Contact: 11/01/2024
Next Scheduled EDR Contact: 12/09/2024
Data Release Frequency: Annually

GOVERNMENT RECORDS SEARCHED / DATA CURRENCY TRACKING

RAATS: RCRA Administrative Action Tracking System

RCRA Administration Action Tracking System. RAATS contains records based on enforcement actions issued under RCRA pertaining to major violators and includes administrative and civil actions brought by the EPA. For administration actions after September 30, 1995, data entry in the RAATS database was discontinued. EPA will retain a copy of the database for historical records. It was necessary to terminate RAATS because a decrease in agency resources made it impossible to continue to update the information contained in the database.

Date of Government Version: 04/17/1995
Date Data Arrived at EDR: 07/03/1995
Date Made Active in Reports: 08/07/1995
Number of Days to Update: 35

Source: EPA
Telephone: 202-564-4104
Last EDR Contact: 06/02/2008
Next Scheduled EDR Contact: 09/01/2008
Data Release Frequency: No Update Planned

PRP: Potentially Responsible Parties

A listing of verified Potentially Responsible Parties

Date of Government Version: 09/19/2023
Date Data Arrived at EDR: 10/03/2023
Date Made Active in Reports: 10/19/2023
Number of Days to Update: 16

Source: EPA
Telephone: 202-564-6023
Last EDR Contact: 10/01/2024
Next Scheduled EDR Contact: 02/10/2025
Data Release Frequency: Quarterly

PADS: PCB Activity Database System

PCB Activity Database. PADS Identifies generators, transporters, commercial storers and/or brokers and disposers of PCB's who are required to notify the EPA of such activities.

Date of Government Version: 05/23/2024
Date Data Arrived at EDR: 07/02/2024
Date Made Active in Reports: 09/26/2024
Number of Days to Update: 86

Source: EPA
Telephone: 202-566-0500
Last EDR Contact: 10/02/2024
Next Scheduled EDR Contact: 01/13/2025
Data Release Frequency: Annually

ICIS: Integrated Compliance Information System

The Integrated Compliance Information System (ICIS) supports the information needs of the national enforcement and compliance program as well as the unique needs of the National Pollutant Discharge Elimination System (NPDES) program.

Date of Government Version: 11/18/2016
Date Data Arrived at EDR: 11/23/2016
Date Made Active in Reports: 02/10/2017
Number of Days to Update: 79

Source: Environmental Protection Agency
Telephone: 202-564-2501
Last EDR Contact: 09/25/2024
Next Scheduled EDR Contact: 01/13/2025
Data Release Frequency: Quarterly

BRS: Biennial Reporting System

The Biennial Reporting System is a national system administered by the EPA that collects data on the generation and management of hazardous waste. BRS captures detailed data from two groups: Large Quantity Generators (LQG) and Treatment, Storage, and Disposal Facilities.

Date of Government Version: 12/31/2021
Date Data Arrived at EDR: 03/09/2023
Date Made Active in Reports: 03/20/2023
Number of Days to Update: 11

Source: EPA/NTIS
Telephone: 800-424-9346
Last EDR Contact: 09/17/2024
Next Scheduled EDR Contact: 12/30/2024
Data Release Frequency: Biennially

INDIAN RESERV: Indian Reservations

This map layer portrays Indian administered lands of the United States that have any area equal to or greater than 640 acres.

Date of Government Version: 12/31/2014
Date Data Arrived at EDR: 07/14/2015
Date Made Active in Reports: 01/10/2017
Number of Days to Update: 546

Source: USGS
Telephone: 202-208-3710
Last EDR Contact: 10/01/2024
Next Scheduled EDR Contact: 01/13/2025
Data Release Frequency: Semi-Annually

FUSRAP: Formerly Utilized Sites Remedial Action Program

DOE established the Formerly Utilized Sites Remedial Action Program (FUSRAP) in 1974 to remediate sites where radioactive contamination remained from Manhattan Project and early U.S. Atomic Energy Commission (AEC) operations.

Date of Government Version: 03/03/2023
Date Data Arrived at EDR: 03/03/2023
Date Made Active in Reports: 06/09/2023
Number of Days to Update: 98

Source: Department of Energy
Telephone: 202-586-3559
Last EDR Contact: 10/24/2024
Next Scheduled EDR Contact: 02/10/2025
Data Release Frequency: Varies

US AIRS (AFS): Aerometric Information Retrieval System Facility Subsystem (AFS)

The database is a sub-system of Aerometric Information Retrieval System (AIRS). AFS contains compliance data on air pollution point sources regulated by the U.S. EPA and/or state and local air regulatory agencies. This information comes from source reports by various stationary sources of air pollution, such as electric power plants, steel mills, factories, and universities, and provides information about the air pollutants they produce. Action, air program, air program pollutant, and general level plant data. It is used to track emissions and compliance data from industrial plants.

Date of Government Version: 10/12/2016
Date Data Arrived at EDR: 10/26/2016
Date Made Active in Reports: 02/03/2017
Number of Days to Update: 100

Source: EPA
Telephone: 202-564-2496
Last EDR Contact: 09/26/2017
Next Scheduled EDR Contact: 01/08/2018
Data Release Frequency: Annually

US AIRS MINOR: Air Facility System Data

A listing of minor source facilities.

Date of Government Version: 10/12/2016
Date Data Arrived at EDR: 10/26/2016
Date Made Active in Reports: 02/03/2017
Number of Days to Update: 100

Source: EPA
Telephone: 202-564-2496
Last EDR Contact: 09/26/2017
Next Scheduled EDR Contact: 01/08/2018
Data Release Frequency: Annually

MINES MRDS: Mineral Resources Data System

Mineral Resources Data System

Date of Government Version: 08/23/2022
Date Data Arrived at EDR: 11/22/2022
Date Made Active in Reports: 02/28/2023
Number of Days to Update: 98

Source: USGS
Telephone: 703-648-6533
Last EDR Contact: 08/22/2024
Next Scheduled EDR Contact: 12/02/2024
Data Release Frequency: Varies

ABANDONED MINES: Abandoned Mines

An inventory of land and water impacted by past mining (primarily coal mining) is maintained by OSMRE to provide information needed to implement the Surface Mining Control and Reclamation Act of 1977 (SMCRA). The inventory contains information on the location, type, and extent of AML impacts, as well as, information on the cost associated with the reclamation of those problems. The inventory is based upon field surveys by State, Tribal, and OSMRE program officials. It is dynamic to the extent that it is modified as new problems are identified and existing problems are reclaimed.

Date of Government Version: 06/13/2024
Date Data Arrived at EDR: 06/14/2024
Date Made Active in Reports: 09/04/2024
Number of Days to Update: 82

Source: Department of Interior
Telephone: 202-208-2609
Last EDR Contact: 09/10/2024
Next Scheduled EDR Contact: 12/16/2024
Data Release Frequency: Quarterly

FINDS: Facility Index System/Facility Registry System

Facility Index System. FINDS contains both facility information and 'pointers' to other sources that contain more detail. EDR includes the following FINDS databases in this report: PCS (Permit Compliance System), AIRS (Aerometric Information Retrieval System), DOCKET (Enforcement Docket used to manage and track information on civil judicial enforcement cases for all environmental statutes), FURS (Federal Underground Injection Control), C-DOCKET (Criminal Docket System used to track criminal enforcement actions for all environmental statutes), FFIS (Federal Facilities Information System), STATE (State Environmental Laws and Statutes), and PADS (PCB Activity Data System).

Date of Government Version: 08/13/2024
Date Data Arrived at EDR: 08/20/2024
Date Made Active in Reports: 08/28/2024
Number of Days to Update: 8

Source: EPA
Telephone: (303) 312-6312
Last EDR Contact: 08/20/2024
Next Scheduled EDR Contact: 12/09/2024
Data Release Frequency: Quarterly

ECHO: Enforcement & Compliance History Information

ECHO provides integrated compliance and enforcement information for about 800,000 regulated facilities nationwide.

Date of Government Version: 06/23/2024
Date Data Arrived at EDR: 06/28/2024
Date Made Active in Reports: 07/12/2024
Number of Days to Update: 14

Source: Environmental Protection Agency
Telephone: 202-564-2280
Last EDR Contact: 10/01/2024
Next Scheduled EDR Contact: 01/13/2025
Data Release Frequency: Quarterly

UXO: Unexploded Ordnance Sites

A listing of unexploded ordnance site locations

Date of Government Version: 09/06/2023
Date Data Arrived at EDR: 09/13/2023
Date Made Active in Reports: 12/11/2023
Number of Days to Update: 89

Source: Department of Defense
Telephone: 703-704-1564
Last EDR Contact: 10/03/2024
Next Scheduled EDR Contact: 01/20/2025
Data Release Frequency: Varies

DOCKET HWC: Hazardous Waste Compliance Docket Listing

A complete list of the Federal Agency Hazardous Waste Compliance Docket Facilities.

Date of Government Version: 05/06/2021
Date Data Arrived at EDR: 05/21/2021
Date Made Active in Reports: 08/11/2021
Number of Days to Update: 82

Source: Environmental Protection Agency
Telephone: 202-564-0527
Last EDR Contact: 08/13/2024
Next Scheduled EDR Contact: 12/02/2024
Data Release Frequency: Varies

FUELS PROGRAM: EPA Fuels Program Registered Listing

This listing includes facilities that are registered under the Part 80 (Code of Federal Regulations) EPA Fuels Programs. All companies now are required to submit new and updated registrations.

Date of Government Version: 08/13/2024
Date Data Arrived at EDR: 08/13/2024
Date Made Active in Reports: 10/09/2024
Number of Days to Update: 57

Source: EPA
Telephone: 800-385-6164
Last EDR Contact: 08/13/2024
Next Scheduled EDR Contact: 11/26/2024
Data Release Frequency: Quarterly

PFAS NPL: Superfund Sites with PFAS Detections Information

EPA's Office of Land and Emergency Management and EPA Regional Offices maintain data describing what is known about site investigations, contamination, and remedial actions under the Comprehensive Environmental Response, Compensation, and Liability Act (CERCLA) where PFAS is present in the environment.

Date of Government Version: 07/01/2024
Date Data Arrived at EDR: 07/01/2024
Date Made Active in Reports: 07/12/2024
Number of Days to Update: 11

Source: Environmental Protection Agency
Telephone: 703-603-8895
Last EDR Contact: 10/02/2024
Next Scheduled EDR Contact: 01/13/2025
Data Release Frequency: Varies

PFAS FEDERAL SITES: Federal Sites PFAS Information

Several federal entities, such as the federal Superfund program, Department of Defense, National Aeronautics and Space Administration, Department of Transportation, and Department of Energy provided information for sites with known or suspected detections at federal facilities.

Date of Government Version: 07/01/2024
Date Data Arrived at EDR: 07/01/2024
Date Made Active in Reports: 07/12/2024
Number of Days to Update: 11

Source: Environmental Protection Agency
Telephone: 202-272-0167
Last EDR Contact: 10/02/2024
Next Scheduled EDR Contact: 01/13/2025
Data Release Frequency: Varies

PFAS TRIS: List of PFAS Added to the TRI

Section 7321 of the National Defense Authorization Act for Fiscal Year 2020 (NDAA) immediately added certain per- and polyfluoroalkyl substances (PFAS) to the list of chemicals covered by the Toxics Release Inventory (TRI) under Section 313 of the Emergency Planning and Community Right-to-Know Act (EPCRA) and provided a framework for additional PFAS to be added to TRI on an annual basis.

Date of Government Version: 07/01/2024
Date Data Arrived at EDR: 07/01/2024
Date Made Active in Reports: 07/12/2024
Number of Days to Update: 11

Source: Environmental Protection Agency
Telephone: 202-566-0250
Last EDR Contact: 10/02/2024
Next Scheduled EDR Contact: 01/13/2025
Data Release Frequency: Varies

PFAS TSCA: PFAS Manufacture and Imports Information

EPA issued the Chemical Data Reporting (CDR) Rule under the Toxic Substances Control Act (TSCA) and requires chemical manufacturers and facilities that manufacture or import chemical substances to report data to EPA. EPA publishes non-confidential business information (non-CBI) and includes descriptive information about each site, corporate parent, production volume, other manufacturing information, and processing and use information.

Date of Government Version: 07/01/2024
Date Data Arrived at EDR: 07/01/2024
Date Made Active in Reports: 07/12/2024
Number of Days to Update: 11

Source: Environmental Protection Agency
Telephone: 202-272-0167
Last EDR Contact: 10/02/2024
Next Scheduled EDR Contact: 01/13/2025
Data Release Frequency: Varies

PFAS RCRA MANIFEST: PFAS Transfers Identified In the RCRA Database Listing

To work around the lack of PFAS waste codes in the RCRA database, EPA developed the PFAS Transfers dataset by mining e-Manifest records containing at least one of these common PFAS keywords: PFAS, PFOA, PFOS, PERFL, AFFF, GENX, GEN-X (plus the VT waste codes). These keywords were searched for in the following text fields: Manifest handling instructions (MANIFEST_HANDLING_INSTR), Non-hazardous waste description (NON_HAZ_WASTE_DESCRIPTION), DOT printed information (DOT_PRINTED_INFORMATION), Waste line handling instructions (WASTE_LINE_HANDLING_INSTR), Waste residue comments (WASTE_RESIDUE_COMMENTS).

Date of Government Version: 07/01/2024
Date Data Arrived at EDR: 07/01/2024
Date Made Active in Reports: 07/12/2024
Number of Days to Update: 11

Source: Environmental Protection Agency
Telephone: 202-272-0167
Last EDR Contact: 10/02/2024
Next Scheduled EDR Contact: 01/13/2025
Data Release Frequency: Varies

PFAS ATSDR: PFAS Contamination Site Location Listing

PFAS contamination site locations from the Department of Health & Human Services, Center for Disease Control & Prevention. ATSDR is involved at a number of PFAS-related sites, either directly or through assisting state and federal partners. As of now, most sites are related to drinking water contamination connected with PFAS production facilities or fire training areas where aqueous film-forming firefighting foam (AFFF) was regularly used.

Date of Government Version: 06/24/2020
Date Data Arrived at EDR: 03/17/2021
Date Made Active in Reports: 11/08/2022
Number of Days to Update: 601

Source: Department of Health & Human Services
Telephone: 202-741-5770
Last EDR Contact: 10/17/2024
Next Scheduled EDR Contact: 02/03/2025
Data Release Frequency: Varies

PFAS WQP: Ambient Environmental Sampling for PFAS

The Water Quality Portal (WQP) is a part of a modernized repository storing ambient sampling data for all environmental media and tissue samples. A wide range of federal, state, tribal and local governments, academic and non-governmental organizations and individuals submit project details and sampling results to this public repository. The information is commonly used for research and assessments of environmental quality.

Date of Government Version: 07/01/2024
Date Data Arrived at EDR: 07/01/2024
Date Made Active in Reports: 07/12/2024
Number of Days to Update: 11

Source: Environmental Protection Agency
Telephone: 202-272-0167
Last EDR Contact: 10/02/2024
Next Scheduled EDR Contact: 01/13/2025
Data Release Frequency: Varies

PFAS PROJECT: NORTHEASTERN UNIVERSITY PFAS PROJECT

The PFAS Contamination Site Tracker records qualitative and quantitative data from each site in a chart, specifically examining discovery, contamination levels, government response, litigation, health impacts, media coverage, and community characteristics. All data presented in the chart were extracted from government websites, such as state health departments or the Environmental Protection Agency, and news articles.

Date of Government Version: 05/19/2023
Date Data Arrived at EDR: 04/05/2024
Date Made Active in Reports: 06/06/2024
Number of Days to Update: 62

Source: Social Science Environmental Health Research Institute
Telephone: N/A
Last EDR Contact: 09/05/2024
Next Scheduled EDR Contact: 12/16/2024
Data Release Frequency: Varies

PFAS NPDES: Clean Water Act Discharge Monitoring Information

Any discharger of pollutants to waters of the United States from a point source must have a National Pollutant Discharge Elimination System (NPDES) permit. The process for obtaining limits involves the regulated entity (permittee) disclosing releases in a NPDES permit application and the permitting authority (typically the state but sometimes EPA) deciding whether to require monitoring or monitoring with limits. Caveats and Limitations: Less than half of states have required PFAS monitoring for at least one of their permittees and fewer states have established PFAS effluent limits for permittees. New rulemakings have been initiated that may increase the number of facilities monitoring for PFAS in the future.

Date of Government Version: 07/01/2024
Date Data Arrived at EDR: 07/01/2024
Date Made Active in Reports: 07/12/2024
Number of Days to Update: 11

Source: Environmental Protection Agency
Telephone: 202-272-0167
Last EDR Contact: 10/02/2024
Next Scheduled EDR Contact: 01/13/2025
Data Release Frequency: Varies

PFAS ECHO: Facilities in Industries that May Be Handling PFAS Listing

Regulators and the public have expressed interest in knowing which regulated entities may be using PFAS. EPA has developed a dataset from various sources that show which industries may be handling PFAS. Approximately 120,000 facilities subject to federal environmental programs have operated or currently operate in industry sectors with processes that may involve handling and/or release of PFAS.

Date of Government Version: 07/01/2024
Date Data Arrived at EDR: 07/01/2024
Date Made Active in Reports: 07/12/2024
Number of Days to Update: 11

Source: Environmental Protection Agency
Telephone: 202-272-0167
Last EDR Contact: 10/02/2024
Next Scheduled EDR Contact: 01/13/2025
Data Release Frequency: Varies

PFAS ECHO FIRE TRAIN: Facilities in Industries that May Be Handling PFAS Listing

A list of fire training sites was added to the Industry Sectors dataset using a keyword search on the permitted facilitys name to identify sites where fire-fighting foam may have been used in training exercises. Additionally, you may view an example spreadsheet of the subset of fire training facility data, as well as the keywords used in selecting or deselecting a facility for the subset. as well as the keywords used in selecting or deselecting a facility for the subset. These keywords were tested to maximize accuracy in selecting facilities that may use fire-fighting foam in training exercises, however, due to the lack of a required reporting field in the data systems for designating fire training sites, this methodology may not identify all fire training sites or may potentially misidentify them.

Date of Government Version: 07/01/2024
Date Data Arrived at EDR: 07/01/2024
Date Made Active in Reports: 07/12/2024
Number of Days to Update: 11

Source: Environmental Protection Agency
Telephone: 202-272-0167
Last EDR Contact: 10/02/2024
Next Scheduled EDR Contact: 01/13/2025
Data Release Frequency: Varies

PFAS PT 139 AIRPORT: All Certified Part 139 Airports PFAS Information Listing

Since July 1, 2006, all certified part 139 airports are required to have fire-fighting foam onsite that meet military specifications (MIL-F-24385) (14 CFR 139.317). To date, these military specification fire-fighting foams are fluorinated and have been historically used for training and extinguishing. The 2018 FAA Reauthorization Act has a provision stating that no later than October 2021, FAA shall not require the use of fluorinated AFFF. This provision does not prohibit the use of fluorinated AFFF at Part 139 civilian airports; it only prohibits FAA from mandating its use. The Federal Aviation Administration?s document AC 150/5210-6D - Aircraft Fire Extinguishing Agents provides guidance on Aircraft Fire Extinguishing Agents, which includes Aqueous Film Forming Foam (AFFF).

Date of Government Version: 07/01/2024
Date Data Arrived at EDR: 07/01/2024
Date Made Active in Reports: 07/12/2024
Number of Days to Update: 11

Source: Environmental Protection Agency
Telephone: 202-272-0167
Last EDR Contact: 10/02/2024
Next Scheduled EDR Contact: 01/13/2025
Data Release Frequency: Varies

AQUEOUS FOAM NRC: Aqueous Foam Related Incidents Listing

The National Response Center (NRC) serves as an emergency call center that fields initial reports for pollution and railroad incidents and forwards that information to appropriate federal/state agencies for response. The spreadsheets posted to the NRC website contain initial incident data that has not been validated or investigated by a federal/state response agency. Response center calls from 1990 to the most recent complete calendar year where there was indication of Aqueous Film Forming Foam (AFFF) usage are included in this dataset. NRC calls may reference AFFF usage in the ?Material Involved? or ?Incident Description? fields.

Date of Government Version: 07/01/2024
Date Data Arrived at EDR: 07/01/2024
Date Made Active in Reports: 07/12/2024
Number of Days to Update: 11

Source: Environmental Protection Agency
Telephone: 202-267-2675
Last EDR Contact: 10/02/2024
Next Scheduled EDR Contact: 01/13/2025
Data Release Frequency: Varies

PCS: Permit Compliance System

PCS is a computerized management information system that contains data on National Pollutant Discharge Elimination System (NPDES) permit holding facilities. PCS tracks the permit, compliance, and enforcement status of NPDES facilities.

Date of Government Version: 12/16/2016
Date Data Arrived at EDR: 01/06/2017
Date Made Active in Reports: 03/10/2017
Number of Days to Update: 63

Source: EPA, Office of Water
Telephone: 202-564-2496
Last EDR Contact: 09/25/2024
Next Scheduled EDR Contact: 01/13/2025
Data Release Frequency: No Update Planned

PCS ENF: Enforcement data

No description is available for this data

Date of Government Version: 12/31/2014
Date Data Arrived at EDR: 02/05/2015
Date Made Active in Reports: 03/06/2015
Number of Days to Update: 29

Source: EPA
Telephone: 202-564-2497
Last EDR Contact: 09/25/2024
Next Scheduled EDR Contact: 01/13/2025
Data Release Frequency: Varies

BIOSOLIDS: ICIS-NPDES Biosolids Facility Data

The data reflects compliance information about facilities in the biosolids program.

Date of Government Version: 10/13/2024
Date Data Arrived at EDR: 10/16/2024
Date Made Active in Reports: 10/23/2024
Number of Days to Update: 7

Source: Environmental Protection Agency
Telephone: 202-564-4700
Last EDR Contact: 10/16/2024
Next Scheduled EDR Contact: 01/27/2025
Data Release Frequency: Varies

UST FINDER RELEASE: UST Finder Releases Database

US EPA's UST Finder data is a national composite of leaking underground storage tanks. This data contains information about, and locations of, leaking underground storage tanks. Data was collected from state sources and standardized into a national profile by EPA's Office of Underground Storage Tanks, Office of Research and Development, and the Association of State and Territorial Solid Waste Management Officials.

Date of Government Version: 06/08/2023
Date Data Arrived at EDR: 10/31/2023
Date Made Active in Reports: 01/18/2024
Number of Days to Update: 79

Source: Environmental Protecton Agency
Telephone: 202-564-0394
Last EDR Contact: 08/08/2024
Next Scheduled EDR Contact: 11/18/2024
Data Release Frequency: Semi-Annually

UST FINDER: UST Finder Database

EPA developed UST Finder, a web map application containing a comprehensive, state-sourced national map of underground storage tank (UST) and leaking UST (LUST) data. It provides the attributes and locations of active and closed USTs, UST facilities, and LUST sites from states and from Tribal lands and US territories . UST Finder contains information about proximity of UST facilities and LUST sites to: surface and groundwater public drinking water protection areas; estimated number of private domestic wells and number of people living nearby; and flooding and wildfires.

Date of Government Version: 06/08/2023
Date Data Arrived at EDR: 10/04/2023
Date Made Active in Reports: 01/18/2024
Number of Days to Update: 106

Source: Environmental Protection Agency
Telephone: 202-564-0394
Last EDR Contact: 08/08/2024
Next Scheduled EDR Contact: 11/18/2024
Data Release Frequency: Varies

E MANIFEST: Hazardous Waste Electronic Manifest System

EPA established a national system for tracking hazardous waste shipments electronically. This system, known as ?e-Manifest,? will modernize the nation?s cradle-to-grave hazardous waste tracking process while saving valuable time, resources, and dollars for industry and states.

Date of Government Version: 07/24/2023
Date Data Arrived at EDR: 04/18/2024
Date Made Active in Reports: 06/06/2024
Number of Days to Update: 49

Source: Environmental Protection Agency
Telephone: 833-501-6826
Last EDR Contact: 09/17/2024
Next Scheduled EDR Contact: 12/30/2024
Data Release Frequency: Varies

PFAS: PFAS Information Listing

A list of entities that have tested groundwater and have found PFAS chemicals, specifically PFOA and PFOS, levels above the health advisory. Potential sources of these chemicals include military bases, fire stations or training centers, landfills, industrial sites, car racetracks, and ski resorts.

Date of Government Version: 04/30/2024
Date Data Arrived at EDR: 05/02/2024
Date Made Active in Reports: 07/24/2024
Number of Days to Update: 83

Source: Department of Public Health & Environment
Telephone: 303-692-3605
Last EDR Contact: 10/15/2024
Next Scheduled EDR Contact: 01/13/2025
Data Release Frequency: Varies

AQUEOUS FOAM: Class B Firefighting Foam Contaminating PFAS Listing

Class B foams put out fires caused by flammable liquids like gasoline, oil, and jet fuel. They may contain PFAS chemicals. Anyone using or storing Class B firefighting foam containing these chemicals must register through the Certificate of Registration Program.303-692-38

Date of Government Version: 07/01/2024
Date Data Arrived at EDR: 07/02/2024
Date Made Active in Reports: 09/24/2024
Number of Days to Update: 84

Source: Department of Public Health & Environment
Telephone: 303-692-3605
Last EDR Contact: 10/01/2024
Next Scheduled EDR Contact: 01/13/2025
Data Release Frequency: Varies

AIRS: Permitted Facility & Emissions Listing

A listing of Air Pollution Control Division permits and emissions data.

Date of Government Version: 05/23/2024
Date Data Arrived at EDR: 05/23/2024
Date Made Active in Reports: 08/20/2024
Number of Days to Update: 89

Source: Department of Public Health & Environment
Telephone: 303-692-3213
Last EDR Contact: 08/20/2024
Next Scheduled EDR Contact: 12/09/2024
Data Release Frequency: Varies

METHANE SITE: Methane Site Investigations - Jefferson County 1980

The objectives of the study are to define as closely as possible the boundaries of methane producing solid waste landfills.

Date of Government Version: 12/31/1980
Date Data Arrived at EDR: 02/13/1995
Date Made Active in Reports: 04/04/1995
Number of Days to Update: 50

Source: Jefferson County Health Department
Telephone: 303-239-7175
Last EDR Contact: 01/27/1995
Next Scheduled EDR Contact: N/A
Data Release Frequency: No Update Planned

METHANE INVESTIG: Methane Gas & Swamp Findings

The primary objective of this study was to assess methane gas related hazards at selected landfill sites in Colorado. These sites were selected by the Colorado Department of Health following evaluation of responses received from County and Municipal agencies about completed and existing landfills within their jurisdiction.

Date of Government Version: 03/15/1979
Date Data Arrived at EDR: 02/13/1995
Date Made Active in Reports: 04/04/1995
Number of Days to Update: 50

Source: Department of Health
Telephone: 303-640-3335
Last EDR Contact: 01/27/1995
Next Scheduled EDR Contact: N/A
Data Release Frequency: No Update Planned

DRYCLEANERS: Drycleaner Facilities

A listing of drycleaning facilities.

Date of Government Version: 05/23/2024
Date Data Arrived at EDR: 05/23/2024
Date Made Active in Reports: 08/19/2024
Number of Days to Update: 88

Source: Department of Public Health & Environment
Telephone: 303-692-3213
Last EDR Contact: 08/20/2024
Next Scheduled EDR Contact: 12/09/2024
Data Release Frequency: Varies

LEAD: Lead Abatement Permit Listing

Lead inspection

Date of Government Version: 11/10/2023
Date Data Arrived at EDR: 04/26/2024
Date Made Active in Reports: 07/22/2024
Number of Days to Update: 87

Source: Department of Publich Health & Environment
Telephone: 303-692-2000
Last EDR Contact: 10/24/2024
Next Scheduled EDR Contact: 02/10/2025
Data Release Frequency: Varies

MINES: Permitted Mines Listing

This dataset represents permitted mines in the State of Colorado

Date of Government Version: 07/08/2024
Date Data Arrived at EDR: 07/09/2024
Date Made Active in Reports: 09/27/2024
Number of Days to Update: 80

Source: Division of Reclamation Mining and safety
Telephone: 303-866-3567
Last EDR Contact: 10/04/2024
Next Scheduled EDR Contact: 01/20/2025
Data Release Frequency: Semi-Annually

UIC: Underground Injection Control

A list of underground injection wells and their locations.

Date of Government Version: 02/05/2024
Date Data Arrived at EDR: 02/06/2024
Date Made Active in Reports: 02/27/2024
Number of Days to Update: 21

Source: Oil & Gas Conservation Commission
Telephone: 303-894-2100
Last EDR Contact: 10/30/2024
Next Scheduled EDR Contact: 02/17/2025
Data Release Frequency: Varies

EDR RECOVERED GOVERNMENT ARCHIVES

Exclusive Recovered Govt. Archives

RGA LF: Recovered Government Archive Solid Waste Facilities List

The EDR Recovered Government Archive Landfill database provides a list of landfills derived from historical databases and includes many records that no longer appear in current government lists. Compiled from Records formerly available from the Department of Public Health & Environment in Colorado.

Date of Government Version: N/A
Date Data Arrived at EDR: 07/01/2013
Date Made Active in Reports: 01/15/2014
Number of Days to Update: 198

Source: Department of Public Health & Environment
Telephone: N/A
Last EDR Contact: 06/01/2012
Next Scheduled EDR Contact: N/A
Data Release Frequency: Varies

RGA LUST: Recovered Government Archive Leaking Underground Storage Tank

The EDR Recovered Government Archive Leaking Underground Storage Tank database provides a list of LUST incidents derived from historical databases and includes many records that no longer appear in current government lists. Compiled from Records formerly available from the Department of Labor and Employment, Oil Inspection Section in Colorado.

Date of Government Version: N/A
Date Data Arrived at EDR: 07/01/2013
Date Made Active in Reports: 01/02/2014
Number of Days to Update: 185

Source: Department of Labor and Employment, Oil Inspection Section
Telephone: N/A
Last EDR Contact: 06/01/2012
Next Scheduled EDR Contact: N/A
Data Release Frequency: Varies

COUNTY RECORDS

ADAMS COUNTY:

LF ADAMS: Summary Report on Methane Gas Hazards and Surveys Conducted on Domestic and Demolition Landfills in Adams County

As of May 8, 1978, all known landfills or dumping sites in the Adams County area have been surveyed.

Date of Government Version: 05/08/1978
Date Data Arrived at EDR: 02/16/1995
Date Made Active in Reports: 04/04/1995
Number of Days to Update: 47

Source: Tri-County Health Department
Telephone: 303-761-1340
Last EDR Contact: 01/27/1995
Next Scheduled EDR Contact: N/A
Data Release Frequency: No Update Planned

ARAPAHOE COUNTY:

LF ARAPAHOE: A Survey of Landfills in Arapahoe County

A survey of Arapahoe County was conducted from August through November, 1977, of all open and closed landfills and dumpsites in the county. Each of the sites found was classified as domestic or demolition.

Date of Government Version: 12/31/1978
Date Data Arrived at EDR: 02/16/1995
Date Made Active in Reports: 04/04/1995
Number of Days to Update: 47

Source: Tri-County Health Department
Telephone: 303-761-1340
Last EDR Contact: 01/27/1995
Next Scheduled EDR Contact: N/A
Data Release Frequency: No Update Planned

BOULDER COUNTY:

LF BOULDER: Old Landfill Sites

Landfill sites in Boulder county.

Date of Government Version: 05/01/1986
Date Data Arrived at EDR: 11/14/1995
Date Made Active in Reports: 12/07/1995
Number of Days to Update: 23

Source: Boulder County Health Department
Telephone: 303-441-1182
Last EDR Contact: 01/30/1998
Next Scheduled EDR Contact: N/A
Data Release Frequency: No Update Planned

DENVER COUNTY:

LF DENVER: Landfills in Denver County
Landfill sites in the city and county of Denver.

Date of Government Version: 06/23/2017
Date Data Arrived at EDR: 06/23/2017
Date Made Active in Reports: 09/06/2017
Number of Days to Update: 75

Source: City and County of Denver
Telephone: 720-913-4839
Last EDR Contact: 09/11/2024
Next Scheduled EDR Contact: 12/23/2024
Data Release Frequency: No Update Planned

LF DENVER CO METHANE: Investigation of Methane Gas Hazards
The purpose of this study was to assess the actual and potential generation, migration, explosive and related problem associated with specified old landfills, and to identify existing and potential problems, suggested strategies to prevent, abate, and control such problems and recommend investigative and monitoring functions as may be deemed necessary. Eight sites determined to be priorities due to population density and potential hazards to population and property were selected by the Colorado Department of Health.

Date of Government Version: 01/01/1981
Date Data Arrived at EDR: 01/29/2013
Date Made Active in Reports: 03/08/2013
Number of Days to Update: 38

Source: City and County of Denver Department of Environmental Health
Telephone: 720-865-5522
Last EDR Contact: 01/15/2013
Next Scheduled EDR Contact: N/A
Data Release Frequency: No Update Planned

DOUGLAS COUNTY:

LF DOUGLAS: Douglas County Landfill Key
Landfill sites in Douglas county.

Date of Government Version: 06/12/1991
Date Data Arrived at EDR: 02/16/1995
Date Made Active in Reports: 04/04/1995
Number of Days to Update: 47

Source: Tri-County Health Department
Telephone: 303-761-1340
Last EDR Contact: 01/27/1995
Next Scheduled EDR Contact: N/A
Data Release Frequency: No Update Planned

PUEBLO COUNTY:

LF PUEBLO: Designated Disposal & Landfill Sites
Only inert materials. Asphalt, cement, dirt & rock unless otherwise specified. These sites are no longer active.

Date of Government Version: 04/30/1990
Date Data Arrived at EDR: 11/16/1995
Date Made Active in Reports: 12/07/1995
Number of Days to Update: 21

Source: Pueblo City-County Health Department
Telephone: 719-583-4300
Last EDR Contact: 11/13/1995
Next Scheduled EDR Contact: N/A
Data Release Frequency: No Update Planned

TRI COUNTY:

LF TRI: Tri-County Area Solid Waste Facilities List (Adams, Arapahoe and Douglas Counties)
Closed Domestic Landfills in Adams County, Closed Domestic Landfills in Arapahoe County, Closed Demolition Landfills in Arapahoe County, Closed Domestic Landfills in Douglas County.

Date of Government Version: 10/15/1983
Date Data Arrived at EDR: 02/16/1995
Date Made Active in Reports: 04/04/1995
Number of Days to Update: 47

Source: Tri-County Health Department
Telephone: 303-761-1340
Last EDR Contact: 01/27/1995
Next Scheduled EDR Contact: N/A
Data Release Frequency: No Update Planned

WELD COUNTY:

LF WELD: Solid Waste Facilities in Weld County
Solid Waste Facilities in Weld County.

Date of Government Version: 01/16/2018
Date Data Arrived at EDR: 02/09/2018
Date Made Active in Reports: 02/23/2018
Number of Days to Update: 14

Source: Weld County Department of Public Health
Telephone: 970-304-6415
Last EDR Contact: 10/31/2024
Next Scheduled EDR Contact: 02/10/2025
Data Release Frequency: No Update Planned

OTHER DATABASE(S)

Depending on the geographic area covered by this report, the data provided in these specialty databases may or may not be complete. For example, the existence of wetlands information data in a specific report does not mean that all wetlands in the area covered by the report are included. Moreover, the absence of any reported wetlands information does not necessarily mean that wetlands do not exist in the area covered by the report.

CT MANIFEST: Hazardous Waste Manifest Data
Facility and manifest data. Manifest is a document that lists and tracks hazardous waste from the generator through transporters to a tsd facility.

Date of Government Version: 08/05/2024
Date Data Arrived at EDR: 08/06/2024
Date Made Active in Reports: 10/25/2024
Number of Days to Update: 80

Source: Department of Energy & Environmental Protection
Telephone: 860-424-3375
Last EDR Contact: 08/06/2024
Next Scheduled EDR Contact: 11/18/2024
Data Release Frequency: No Update Planned

NY MANIFEST: Facility and Manifest Data
Manifest is a document that lists and tracks hazardous waste from the generator through transporters to a TSD facility.

Date of Government Version: 12/31/2019
Date Data Arrived at EDR: 11/30/2023
Date Made Active in Reports: 12/01/2023
Number of Days to Update: 1

Source: Department of Environmental Conservation
Telephone: 518-402-8651
Last EDR Contact: 10/24/2024
Next Scheduled EDR Contact: 02/03/2025
Data Release Frequency: Quarterly

PA MANIFEST: Manifest Information
Hazardous waste manifest information.

Date of Government Version: 06/30/2018
Date Data Arrived at EDR: 07/19/2019
Date Made Active in Reports: 09/10/2019
Number of Days to Update: 53

Source: Department of Environmental Protection
Telephone: 717-783-8990
Last EDR Contact: 10/03/2024
Next Scheduled EDR Contact: 01/20/2025
Data Release Frequency: Annually

WI MANIFEST: Manifest Information
Hazardous waste manifest information.

Date of Government Version: 05/31/2018
Date Data Arrived at EDR: 06/19/2019
Date Made Active in Reports: 09/03/2019
Number of Days to Update: 76

Source: Department of Natural Resources
Telephone: N/A
Last EDR Contact: 08/28/2024
Next Scheduled EDR Contact: 12/16/2024
Data Release Frequency: Annually

Oil/Gas Pipelines
Source: Endeavor Business Media
Petroleum Bundle (Crude Oil, Refined Products, Petrochemicals, Gas Liquids (LPG/NGL), and Specialty Gases (Miscellaneous)) N = Natural Gas Bundle (Natural Gas, Gas Liquids (LPG/NGL), and Specialty Gases (Miscellaneous)). This map includes information copyrighted by Endeavor Business Media. This information is provided on a best effort basis and Endeavor Business Media does not guarantee its accuracy nor warrant its fitness for any particular purpose. Such information has been reprinted with the permission of Endeavor Business Media.

Electric Power Transmission Line Data
Source: Endeavor Business Media
This map includes information copyrighted by Endeavor Business Media. This information is provided on a best effort basis and Endeavor Business Media does not guarantee its accuracy nor warrant its fitness for any particular purpose. Such information has been reprinted with the permission of Endeavor Business Media.

GOVERNMENT RECORDS SEARCHED / DATA CURRENCY TRACKING

Sensitive Receptors: There are individuals deemed sensitive receptors due to their fragile immune systems and special sensitivity to environmental discharges. These sensitive receptors typically include the elderly, the sick, and children. While the location of all sensitive receptors cannot be determined, EDR indicates those buildings and facilities - schools, daycares, hospitals, medical centers, and nursing homes - where individuals who are sensitive receptors are likely to be located.

AHA Hospitals:
Source: American Hospital Association, Inc.
Telephone: 312-280-5991
The database includes a listing of hospitals based on the American Hospital Association's annual survey of hospitals.

Medical Centers: Provider of Services Listing
Source: Centers for Medicare & Medicaid Services
Telephone: 410-786-3000
A listing of hospitals with Medicare provider number, produced by Centers of Medicare & Medicaid Services, a federal agency within the U.S. Department of Health and Human Services.

Nursing Homes
Source: National Institutes of Health
Telephone: 301-594-6248
Information on Medicare and Medicaid certified nursing homes in the United States.

Public Schools
Source: National Center for Education Statistics
Telephone: 202-502-7300
The National Center for Education Statistics' primary database on elementary and secondary public education in the United States. It is a comprehensive, annual, national statistical database of all public elementary and secondary schools and school districts, which contains data that are comparable across all states.

Private Schools
Source: National Center for Education Statistics
Telephone: 202-502-7300
The National Center for Education Statistics' primary database on private school locations in the United States.

Daycare Centers: Daycare Listing
Source: Department of Human Services
Telephone: 303-866-5958

Flood Zone Data: This data was obtained from the Federal Emergency Management Agency (FEMA). It depicts 100-year and 500-year flood zones as defined by FEMA. It includes the National Flood Hazard Layer (NFHL) which incorporates Flood Insurance Rate Map (FIRM) data and Q3 data from FEMA in areas not covered by NFHL.
Source: FEMA
Telephone: 877-336-2627
Date of Government Version: 2003, 2015

NWI: National Wetlands Inventory. This data, available in select counties across the country, was obtained by EDR in 2002, 2005, 2010 and 2015 from the U.S. Fish and Wildlife Service.

State Wetlands Data: Riparian Vegetation Data
Source: Division of Wildlife
Telephone: 970-416-3360

Current USGS 7.5 Minute Topographic Map
Source: U.S. Geological Survey

GOVERNMENT RECORDS SEARCHED / DATA CURRENCY TRACKING

STREET AND ADDRESS INFORMATION

ï¿½ 2015 TomTom North America, Inc. All rights reserved. This material is proprietary and the subject of copyright protection and other intellectual property rights owned by or licensed to Tele Atlas North America, Inc. The use of this material is subject to the terms of a license agreement. You will be held liable for any unauthorized copying or disclosure of this material.

CASE SUMMARY

JEFFERSON COUNTY COLORADO
Planning and Zoning

100 Jefferson County Parkway,
Suite 3550, Golden, CO 80419
(303) 271-8700 | planning.jeffco.us

CASE SUMMARY

Consent Agenda

PC HEARING DATE:	May 14, 2025
BCC HEARING DATE:	June 10, 2025

22-132293PF	Preliminary and Final Plat
CASE NAME:	Vernon Gardens Second Filing, Exemption Survey No. 2 Adjustment #1
OWNER:	961Orion Street, LLC, a Colorado limited liability company
APPLICANT:	Ryan Wannamaker
LOCATION:	961 Orion St, Golden Section 1, Township 4 South, Range 70 West
APPROXIMATE AREA:	0.889 Acres
PURPOSE:	**To subdivide the property into 6 lots for two-family units (duplex), allowing a total of 6 dwelling units**
CASE MANAGER:	Benjamin Johnson, Civil Planning Engineer

Applicant Team Presenters:

Ryan Wannamaker, wannamaker1@msn.com, 303-949-6078, applicant
David Altschuld, daltschuld@gmail.com, 720-431-6737, owner
Jim Allen, jim.allen@tjcivil.com, 303-330-8991, engineer

Issues:

- None

Recommendations:

- **Staff:** Recommends APPROVAL subject to conditions
- **Planning Commission**: Recommends APPROVAL subject to conditions

Interested Parties:

- None

Level of Community Interest: Low

Representative for Applicant: Jim Allen

General Location: South of the intersection of Orion Street and W 10th Ave

Case Manager Information: Phone: 303-271-8705 e-mail: bzjohnso@jeffco.us

PLANNING COMMISSION RESOLUTION

It was moved by Commissioner **Liles** that the following Resolution be adopted:

BEFORE THE PLANNING COMMISSION
COUNTY OF JEFFERSON
STATE OF COLORADO

May 14, 2025

RESOLUTION

22-132293PF	Preliminary and Final Plat
Case Name:	Vernon Gardens Second Filing, Exemption Survey No. 2 Adjustment #1
Owner:	961 Orion Street, LLC, a Colorado limited liability company
Applicant:	Ryan Wannamaker
Location:	961 Orion St, Golden Section 1, Township 4 South, Range 70 West
Approximate Area:	0.889 Acres
Purpose:	**To subdivide the property into 6 lots for two-family units (duplex), allowing a total of 6 dwelling units**
Case Manager:	Ben Johnson

The Jefferson County Planning Commission hereby recommends **APPROVAL WITH CONDITIONS**, of the above application on the basis of the following facts:

1. That the factors upon which this decision is based include evidence and testimony and staff findings presented in this case.

2. The Planning Commission finds that:
   The proposal conforms to the Land Development Regulation because all applicable regulations have been satisfied, or will be satisfied, prior to recordation of the Preliminary and Final Plat, as indicated within the staff report.

3. The following are conditions of approval:
   A. Submittal of a title insurance commitment update with an effective date less than 45 days prior to the recording of the Plat which

depicts no new owners or encumbrances. Said title insurance commitment shall be approved by the County Attorney's Office.

B. The Improvements Agreement and Exhibit A being approved as to form by the County Attorney's Office.

C. The recordation of the Plat mylars being prepared in accordance with the red marked print dated May 14, 2025.

D. Payment of $17,010 for fees in lieu of park land dedication prior to plat recordation or payment of the fees-in-lieu of park land dedication as set forth in the Improvements Agreement prior to building permit, as applicable. This fee should be submitted on a separate check made payable to Jefferson County Treasurer.

E. Payment of $11,340 for fees in lieu of school land dedication prior to plat recordation or payment of the fees-in-lieu of school land dedication as set forth in the Improvements Agreement prior to building permit, as applicable. This fee should be submitted on a separate check made payable to Jefferson County Treasurer.

F. Submittal of a current tax certificate from the County Treasurer's Office indicating that all ad valorem taxes applicable to Vernon Gardens Second Filing, Exemption Survey No. 2 Adjustment #1 for prior years have been paid.

G. Resolution of Planning Engineering's comments dated April 14, 2025.

Commissioner **Spencer** seconded the adoption of the foregoing Resolution, and upon a vote of the Planning Commission as follows:

Commissioner	**Rogers**	**aye**
Commissioner	**Spencer**	**aye**
Commissioner	**Becker**	**aye**
Commissioner	**Bolin**	**aye**
Commissioner	**Liles**	**aye**
Commissioner	**Messner**	**aye**
Commissioner	**LaRocque**	**aye**

The Resolution was adopted by **unanimous** vote of the Planning Commission of the County of Jefferson, State of Colorado.

I, Kimi Schillinger, Executive Secretary for the Jefferson County Planning Commission, do hereby certify that the foregoing is a true copy of a Resolution duly adopted by the Jefferson County Planning Commission at a regular hearing held in Jefferson County, Colorado, May 14, 2025.

Kimi Schillinger
Executive Secretary

STAFF REPORT

JEFFERSON COUNTY COLORADO
Planning and Zoning

100 Jefferson County Parkway,
Suite 3550, Golden, CO 80419
(303) 271-8700 | planning.jeffco.us

STAFF REPORT

PC HEARING DATE:	May 14, 2025
BCC HEARING DATE:	June 10, 2025

22-132293PF	Preliminary and Final Plat
CASE NAME:	Vernon Gardens Second Filing, Exemption Survey No. 2 Adjustment #1
OWNER:	961 Orion St, LLC, a Colorado limited liability company
APPLICANT:	Ryan Wannamaker
LOCATION:	961 Orion Street, Golden SECTION 1, TOWNSHIP 4 SOUTH, RANGE 40 WEST
APPROXIMATE AREA:	0.889 Acres
PURPOSE:	**To subdivide the property into 6 lots for two-family units (duplex), allowing a total of 6 dwelling units**
CASE MANAGER:	Benjamin Johnson, Civil Planning Engineer

REPRESENTATIVE:	Ryan Wannamaker David Altschuld
ZONING:	Residential Two (R-2)

Background / Unique Information:
The purpose of this development is to subdivide the property into 6 lots for two-family units (duplex), allowing a total of 6 dwelling units. This development is in a residential area that is characterized by shallow slopes. The zoning requirements of the R-2 zone district and the Jefferson County Land Development Regulation are applicable to this development. Vegetation consists of native grasses. There is a northeastern trending drainage way, Lena Gulch, which is to the south of the development and includes a FEMA Zone AE floodplain. The property is currently vacant land. Water supply will be provided by Consolidated Mutual Water. Pleasant View Water and Sanitation District will provide sewer services. There are public improvements required for this development. The applicant is required to provide storm water detention with water quality and street improvements to Orion Street which includes sidewalk and street widening. Each lot will take direct access off County-maintained Orion Street.

Notification:
Notification of the proposed development was sent and posted in accordance with the Land Development Regulation. Please see the attached Notification Summary for more information.

During the processing of the application, Staff has received one response in objection to the proposal. The objection was related to speeding on Orion Street and the narrow street width creating issues with on-street parking. With this development, the applicant is performing adjacent street improvements to widen the existing street to County local street standards and also reconstructing the speed hump on the adjacent half of Orion Street.

Analysis:

	1. Lot and Tract Standards	2. Circulation	3. Water Supply/ Wastewater/Utilities	4. Fire Protection	5. Drainage	6. Geologic and Geotechnical	7. Sensory Impacts	8. Wildlife/Vegetation/ Landscaping	9. Historical/Archeological/ Paleontological
Acceptable	X	X	X	X	X	X	X	X	X
Unacceptable									

Services: Pleasant View Fire Department
Consolidated Mutual Water Company
Pleasant View Water and Sanitation District
Lumen
Public Service Company
Comcast Cable
Pleasant View Metropolitan District

SUMMARY OF COMPLIANCE WITH THE LAND DEVELOPMENT REGULATION:

1. **Lot and Tract Standards:**
   The proposed subdivision is composed of 6 lots. Three new two-family dwellings (duplexes) will be constructed with a single family attached unit on each lot.

   The proposed configuration of the lots is in compliance with Section 14 (Lot and Tract Standards) of the Jefferson County Land Development Regulation.

2. **Circulation:**

   The proposed residential development will take access from the public street, Orion Street.

The circulation for this development is in conformance with the requirements of Section 15 (Circulation) of the Land Development Regulation and the Transportation Design and Construction Manual.

3. <u>Water Supply, Wastewater and Utilities:</u>

Consolidated Mutual Water Company will provide water for the subdivision. Pleasant View Water and Sanitation will provide sewer services for each lot.

Xcel will provide electricity. Lumen will provide telephone service.

The water, sanitation and utilities for this site are in conformance with Section 21 (Water Supply), 22 (Wastewater) and 23 (Utilities) of the Land Development Regulation.

4. <u>Fire Protection:</u>

Pleasant View Fire has deemed the proposal to be acceptable and will provide fire protection for the subject property. As part of this proposed development, Pleasant View Fire has stated that the applicant will either need to provide fire sprinklers in each proposed unit or install a new fire hydrant to meet fire flow requirements. The applicant has opted to install fire sprinklers and a note has been added to the plat for that requirement.

Fire protection for the site is in conformance with Section 24 (Fire Protection) of the Land Development Regulation.

5. <u>Drainage:</u>

The submitted Drainage Report is deemed to be acceptable, subject to the resolution of engineering comments dated April 14, 2025, which is listed as a condition for plat approval.

There is an existing FEMA Zone AE floodplain within the boundary of the subdivision. All proposed work as part of this subdivision that is located within the floodplain was approved with a floodplain development permit application, 23-109650FPA.

The drainage requirements for this development comply with Section 18 of the Land Development Regulation (Drainage) and the Storm Drainage Design and Technical Criteria with the resolution of engineering comments dated April 14, 2025.

6. <u>Geologic and Geotechnical:</u>

This site is not in an identified geohazard area. The “Subsurface Investigation and Engineering Analysis” report dated June 10, 2022 prepared by Complete Engineering Services, Inc describes subsurface soils as “medium-dense clayey sand” and “stiff, mottled clay” with low swell potential in lab tests. The report identifies groundwater at depths between 10 to 12 feet below existing

grades and identifies the potential that stabilization measures will be required if saturated soils are encountered.

An Expansive Soils Plat Restriction requiring a subsurface investigation for each lot and a Basement Restriction requiring proposed foundations have a minimum separation of three-feet above the seasonally high groundwater table have been added to the Plat to ensure that Colorado Geological Survey comments and geotechnical issues identified in the report are properly addressed at the time of building permit.

The proposed Plat complies with Section 25 of the Land Development Regulation (Geologic and Geotechnical) related to the mitigation of geologic hazards.

7. Sensory Impacts:

The Sensory Impact information provided by the applicant indicates the proposed project is expected to have negligible impacts to acoustical, ocular and olfactory levels. Acoustical, ocular and olfactory levels will not exceed those set forth by Section 26 of the Land Development Regulation. Planning & Zoning and Public Health reviewed the information and deemed it acceptable.

The proposed Plat complies with Section 26 of the Land Development Regulation (Sensory Impact).

8. Wildlife/Vegetation/Landscaping:

The proposal is not expected to have a significant impact on wildlife. A referral was sent to the Division of Wildlife; however, Planning Staff has not received any response to date.

The proposed Plat complies with Section 28 (Wildlife and Vegetation) of the Land Development Regulation related to Wildlife and Vegetation.

9. Historical/Archeological/Paleontological:

At the applicant's request, the Office of Archaeology and Historic Preservation conducted a search of the Colorado Inventory of Cultural Resources within the property. As a result, no sites were located, and no further analysis or study was required.

The historical, archeological and paleontological requirements for this subdivision comply with Section 31 (Historical, Archaeological, and Paleontological) of the Land Development Regulation.

ADDITIONAL REQUIREMENTS:

10. Park and School Requirements:

There are 6 Lots proposed lots planned for this Plat; therefore, the net change in density for this filing is 6 additional dwelling units.

The Land Development Regulation provides that park and school requirements can be met by either land dedication or payment of fees. For Vernon Gardens Second Filing, Exemption Survey No. 2 Adjustment #1, park and school requirements are being fulfilled by the payment of fees.

The fee applicable to this subdivision is as follows:

- Single family attached unit (plains) = $4,725 * 6 = $28,350

The breakdown for park and school fee distribution is 60% and 40% respectively. The fee breakdown for the subdivision is as follows:

Park Fee = ($28,350) (60%) = $17,010
School Fee = ($28,350) (40%) = $11,340

The payment of these fees has been listed as a condition of plat approval.

11. **Performance Guarantee and Subdivision Improvements Agreement:**

The public improvements associated with this subdivision will be guaranteed by Plat restriction. At this time, the associated Improvements Agreement has not been approved as to form by the County Attorney's Office, and the Exhibit "A" to be attached to the Improvements Agreement has not been finally approved. Approval of the Improvements Agreement and Exhibit "A" are listed as conditions of approval for this development.
There are outstanding comments, dated April 14, 2025 from Planning Engineering for revisions to the Exhibit A that will be addressed as a condition of approval for this plat.

If this Plat is approved, the Chairman of the Board of County Commissioners shall be authorized to sign the Improvements Agreement on behalf of the County and staff will record the Improvements Agreement with the Plat.

12. Mineral Rights:

The applicant in this case certified that the required inspection occurred per Colorado State Statute and that the inspection indicated that mineral rights have not been severed from the surface estate of the subject property.

PLANNING COMMISSION:

Planning Commission Recommendation (Resolution Dated May 14, 2025 Attached):

Approval	
Approval with Conditions	X (7-0) vote
Denial	

The case was scheduled on the consent agenda for the Planning Commission hearing. The case remained on the consent agenda and was not removed for discussion.

FINDINGS/RECOMMENDATIONS:

Staff recommends that the Board of County Commissioners find that the proposal conforms to the Land Development Regulation because all applicable regulations have been satisfied, or will be satisfied, prior to recordation of the Preliminary and Final Plat, as indicated within this report.

And;

Staff recommends that the Board of County Commissioners recommend approval of Case No. 22-132293PF subject to the following conditions:

1. Submittal of a title insurance commitment update with an effective date less than 45 days prior to the recording of the Plat which depicts no new owners or encumbrances. Said title insurance commitment shall be approved by the County Attorney's Office.

2. The Improvements Agreement and Exhibit A being approved as to form by the County Attorney's Office.

3. The recordation of the Plat mylars being prepared in accordance with the red marked print dated June 10, 2025.

4. Payment of $17,010 for fees in lieu of park land dedication prior to plat recordation or payment of the fees-in-lieu of park land dedication as set forth in the Improvements Agreement prior to building permit, as applicable. This fee should be submitted on a separate check made payable to Jefferson County Treasurer.

5. Payment of $11,340 for fees in lieu of school land dedication prior to plat recordation or payment of the fees-in-lieu of school land dedication as set forth in the Improvements Agreement prior to building permit, as applicable. This fee should be submitted on a separate check made payable to Jefferson County Treasurer.

6. Submittal of a current tax certificate from the County Treasurer's Office indicating that all ad valorem taxes applicable to Vernon Gardens Second Filing, Exemption Survey No. 2 Adjustment #1 for prior years have been paid.

7. Resolution of Planning Engineering's comments dated April 14, 2025.

Staff further recommends that the Board of County Commissioners authorize the Chairman to sign the Improvements Agreement once approved as to form by the County Attorney's Office.

COMMENTS PREPARED BY:

Benjamin Johnson

_____

Benjamin Johnson, Civil Planning Engineer
June 3, 2025

CASE DATES SUMMARY

JEFFERSON COUNTY COLORADO
Planning and Zoning

100 Jefferson County Parkway,
Suite 3550, Golden, CO 80419
(303) 271-8700 | planning.jeffco.us

Jefferson County Case Management

CASE DATE SUMMARY

CASE NUMBER: **22-132293PF** CASE TYPE: Preliminary and Final Plat

INITIAL APPLICATION SUBMITTED:	December 19, 2022
CASE SENT ON FIRST REFERRAL:	May 22, 2023
REFERRAL RESPONSES PROVIDED TO APPLICANT:	June 29, 2023
CASE SENT ON SECOND REFERRAL:	November 13, 2024
REFERRAL RESPONSES PROVIDED TO APPLICANT:	December 10, 2024
CASE SENT ON THIRD REFERRAL:	February 20, 2025
REFERRAL RESPONSES PROVIDED TO APPLICANT:	March 25, 2025
CASE SCHEDULED FOR HEARING(S):	April 14, 2025

PROPOSED PLAT

RECEPTION NO. . DATE , 20 , TIME , COUNTY OF JEFFERSON, STATE OF COLORADO, $

JEFFERSON COUNTY COLORADO
RED-MARKED PRINT
Presented to the Board of County Commissioners
Return to Planning and Zoning
June 10, 2025

VERNON GARDENS SECOND FILING, EXEMPTION SURVEY No. 2 ADJUSTMENT #1

CASE NUMBER 22-132293PF

A Subdivision OF Parcel 1 OF VERNON GARDENS SECOND FILING, EXEMPTION SURVEY NO. 2,
LYING WITHIN THE SOUTHWEST QUARTER (SW 1/4) OF SECTION 1, TOWNSHIP 4 SOUTH, RANGE 70 WEST
OF THE 6TH PRINCIPAL MERIDIAN, COUNTY OF JEFFERSON, STATE OF COLORADO
SHEET 1 OF 2

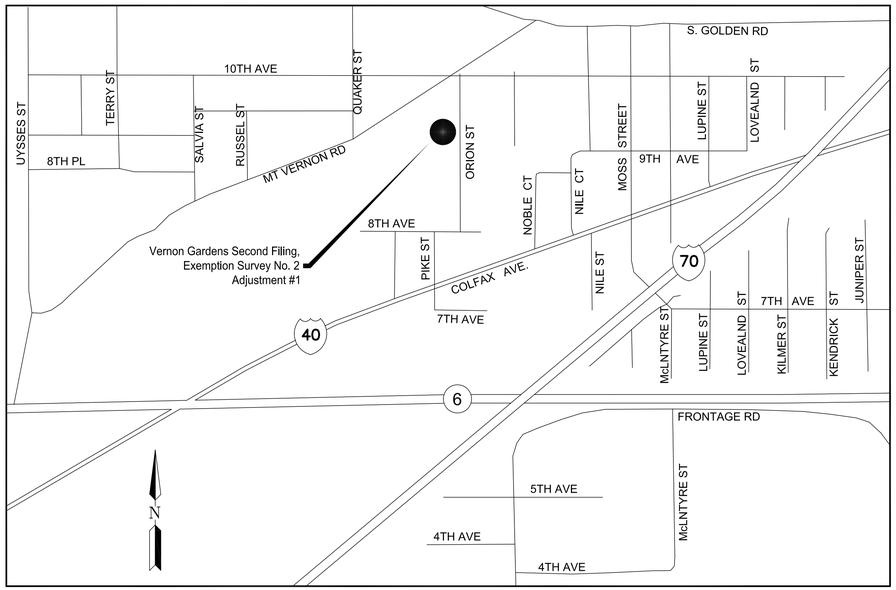

VICINITY MAP
Scale: 1"=600'

GENERAL DEDICATION

KNOW ALL MEN BY THESE PRESENTS: THAT 961 ORION STREET, LLC, A COLORADO LIMITED LIABILITY COMPANY, THE UNDERSIGNED, BEING THE OWNER~~(S)~~ AND THE HOLDER~~(S)~~ OF DEED OF TRUST OF THOSE LANDS DESCRIBED HEREON, HAVE LAID OUT, THE SAME INTO LOTS, ~~TRACTS, BLOCKS, STREETS/ROADS~~ EASEMENTS, ~~NO BUILD AREAS, AND NON-DISTURBANCE AREAS~~, AS SHOWN HEREON UNDER THE NAME AND STYLE OF 961 ORION SUBDIVISION, AND DOES, BY THESE PRESENTS, OF ITS OWN FREE WILL AND VOLUNTARILY, WITHOUT COERCION, THREAT OR BUSINESS COMPULSION, GRANT AND CONVEY TO THE COUNTY OF JEFFERSON, ALL EASEMENTS, EXCEPT THOSE OF PRIOR RECORD, AS SHOWN HEREON.

and

LEGAL DESCRIPTION

PARCEL 1, VERNON GARDENS, SECOND FILING, EXEMPTION SURVEY NO.2, RECORDED DECEMBER 11, 1996, AT RECEPTION NO. F0342669, COUNTY OF JEFFERSON, STATE OF COLORADO, LOCATED IN THE SOUTHWEST QUARTER (SW 1/4) OF SECTION 1, TOWNSHIP 4 SOUTH, RANGE 70 WEST OF THE 6TH PRINCIPAL MERIDIAN, COUNTY OF JEFFERSON, STATE OF COLORADO.

Owner/Subdivider

~~CERTIFICATE OF OWNERSHIP~~

~~961 ORION STREET, LLC, A COLORADO LIMITED LIABILITY COMPANY, BEING THE OWNER OF THE ABOVE DESCRIBED PROPERTY, HAS REPLATTED THE SAME INTO LOTS UNDER THE NAME AND STYLE OF VERNON GARDENS SECOND FILING, EXEMPTION SURVEY NO. 2 ADJUSTMENT #1.~~

FOR: 961 ORION STREET, LLC, A COLORADO LIMITED LIABILITY COMPANY

BY: _____ DATE: _____

NOTARY CERTIFICATE

STATE OF _____)
) SS.
COUNTY OF_____)

THE ABOVE AND FOREGOING INSTRUMENT WAS ACKNOWLEDGED BEFORE ME THIS_____ DAY OF_____, 20_____,
BY _____ AS MANAGING MEMBER OF 961 ORION STREET, LLC, A COLORADO LIMITED LIABILITY COMPANY.

MY COMMISSION EXPIRES: _____

WITNESS MY HAND AND OFFICIAL SEAL.

_____
NOTARY PUBLIC

HOLDER OF DEED OF TRUST

COST FUND 1, LLC, A COLORADO LIMITED LIABILITY COMPANY

_____ _____
NAME: TITLE:

COST FUND 1, LLC, A COLORADO LIMITED LIABILITY COMPANY
2828 N. SPEER BLVD., #210-5
DENVER, CO 80211
(303) 567-6333

STATE OF _____)
) SS.
COUNTY OF _____)

THE FOREGOING DEDICATION AND FOREGOING COVENANT AND PLAT RESTRICTION ON CONVEYANCE, SALE OR TRANSFER WERE ACKNOWLEDGED BEFORE ME THIS ____ DAY OF _____, 20 ___, BY _____ AS _____ OF COST FUND 1, LLC, A COLORADO LIMITED LIABILITY COMPANY.

MY COMMISSION EXPIRES: _____

_____
NOTARY PUBLIC

ADDRESS OF NOTARY: _____

TITLE COMPANY CERTIFICATE

I, _____ , AS AUTHORIZED AGENT OF THE UNDERSIGNED TILE COMPANY, DO HEREBY CERTIFY THAT I HAVE EXAMINED THE TITLE OF LANDS HEREIN DEDICATED AND SHOWN UPON THE WITHIN PLAT AS PUBLIC LANDS, PUBLIC WAYS AND EASEMENTS, AND THE TITLE OF SUCH LANDS IS IN THE DEDICATOR(S), FREE AND CLEAR OF ALL LIENS AND ENCUMBRANCES, EXCEPT AS SHOWN IN TITLE COMMITMENT NO. _____, ISSUED BY _____ TITLE COMPANY, WITH AN EFFECTIVE DATE OF _____.

_____
AS AUTRHORIZED AGENT OF _____ TITLE COMPANY

REVIEW CERTIFICATE

REVIEWED BY PUBLIC HEALTH THIS ____ DAY OF _____, 20 ___.

_____
PUBLIC HEALTH

REVIEWED BY THE PLANNING COMMISSION THIS ____ DAY OF _____, 20 ___.

_____
CHAIRMAN

Add notes:
12) No building permit shall be issued for an occupied structure on any lot until the fire sprinkler plans for that structure have been approved by the Pleasant View Fire Protection District. At the time of building permit application, a letter from the Pleasant View Fire Protection District must be submitted to the Planning and Zoning Division indicating that said fire sprinkler plans have been approved.
13) Ten (10) foot wide utility easements are hereby granted on private property adjacent to all public streets and around the subdivision. These easements are dedicated for the installation, maintenance and replacement of electric, gas, television cable and telecommunications facilities. Utilities shall also be permitted within any access easements and private streets in the subdivision. Permanent structures and water meters shall not be allowed within said utility easements.

Covenant and plat Restriction on conveyance, sale or transfer

~~PLAT RESTRICTIONS~~

1. AS A CONDITION OF APPROVAL BY THE BOARD OF COUNTY COMMISSIONERS OF JEFFERSON COUNTY AND TO MEET THE REQUIREMENTS OF SECTION 30-28-137, C.R.S., AS AMENDED, NO CONVEYANCE, SALE, OR TRANSFER OF TITLE OF THIS ENTIRE DEVELOPMENT, OR OF ANY LOT, LOTS, TRACT, OR TRACTS OF LAND IDENTIFIED HEREON, SHALL BE MADE, NOR SHALL ANY BUILDING PERMIT OR CERTIFICATE OF OCCUPANCY BE ISSUED UNTIL A CERTIFICATE OF COMPLIANCE HAS BEEN GRANTED BY THE COUNTY OF JEFFERSON, STATE OF COLORADO, DULY RECORDED BY THE CLERK AND RECORDER OF SAID SAME COUNTY, CERTIFYING THAT:

A) THOSE PUBLIC IMPROVEMENTS AS SET FORTH IN EXHIBIT "A" OF THE IMPROVEMENTS AGREEMENT, RECORDED UNDER RECEPTION NUMBER _____ OF THE RECORDS OF THE JEFFERSON COUNTY CLERK AND RECORDER, OR THAT PORTION OF SAID IMPROVEMENTS AS SHALL BE NECESSARY TO TOTALLY SERVE SPECIFIC LOT(S) OR TRACT(S) COVERED BY A PARTICULAR CERTIFICATE OF COMPLIANCE, HAVE BEEN PROPERLY DESIGNED, ENGINEERED, CONSTRUCTED AND ACCEPTED AS MEETING THE STANDARDS OF THE COUNTY OF JEFFERSON, APPLICABLE SPECIAL DISTRICTS, AND APPLICABLE SERVICING AUTHORITIES, OR, THAT A SUBSTITUTED SECURITY OR COLLATERAL AUTHORIZED PURSUANT TO SECTION 30-28-101, C.R.S., AS AMENDED, HAS BEEN SUBMITTED TO AND ACCEPTED BY THE COUNTY OF JEFFERSON, WHICH IS SUFFICIENT IN THE JUDGMENT OF THE COUNTY TO ASSURE COMPLETION OF ALL PUBLIC IMPROVEMENTS AS SET FORTH IN EXHIBIT "A" OF SAID IMPROVEMENTS AGREEMENT RECORDED UNDER RECEPTION NUMBER _____, OR ANY PORTION THEREOF NECESSARY TO SERVE THE SPECIFIC LOT(S) OR TRACTS(S) TO BE COVERED BY A PARTICULAR CERTIFICATE OF COMPLIANCE AND TO ASSURE SAID IMPROVEMENTS ARE COMPLETED IN ACCORDANCE WITH REASONABLE DESIGN AND TIME SPECIFICATION; AND

PROVIDED, HOWEVER THAT A CONVEYANCE, SALE, OR TRANSFER OF A SPECIFIC LOT(S) OR TRACT(S) OF LAND IDENTIFIED HEREON MAY BE MADE PRIOR TO COMPLIANCE WITH THE ABOVE PROVISIONS WHERE THE OWNER/SUBDIVIDER(S) AND THE PROPOSED TRANSFEREE, WHO MUST ALSO QUALIFY AS A "SUBDIVIDER" UNDER THE PROVISIONS OF SECTION 30-28-137, C.R.S., AS DEFINED IN SECTION 30-28-101 (9), C.R.S., AND THE BOARD OF COUNTY COMMISSIONERS OF JEFFERSON COUNTY HAVE EXECUTED AN AMENDMENT TO THE IMPROVEMENTS AGREEMENT WHEREBY THE TRANSFEREE OWNER/SUBDIVIDER AGREES TO COMPLY WITH THE SAME REQUIREMENTS AND RESTRICTIONS OF THIS COVENANT AND RESTRICTION ON CONVEYANCE, SALE OR TRANSFER.

THESE RESTRICTIONS ON CONVEYANCE, SALE OR TRANSFER OF TITLE OF THIS ENTIRE DEVELOPMENT OR ANY LOT(S) OR TRACT(S) OF LAND IDENTIFIED HEREON SHALL RUN WITH THE LAND AND SHALL EXTEND TO AND BE BINDING UPON THE HEIRS, EXECUTORS, LEGAL REPRESENTATIVES AND ASSIGNS OF THE SUBDIVIDER AND SHALL BE ENFORCEABLE PURSUANT TO THE PROVISIONS OF SECTION 30-28-137, C.R.S, AS AMENDED.

consideration add space

(A) APPROVED, COVENANTED AND AGREED TO AS ~~CONSIDERATION~~ FOR APPROVALBY THE BOARD OF COUNTY COMMISSIONERS THIS ____ DAY OF _____, 20 ____.

2. AS A CONDITION OF APPROVAL BY THE BOARD OF COUNTY COMMISSIONERS OF JEFFERSON COUNTY, NO CONVEYANCE, SALE OR TRANSFER OF TITLE OF LOTS (INSERT LOT NUMBERS) OR TRACTS (INSERT TRACT NAMES) IDENTIFIED HEREON, SHALL BE MADE, NOR ANY BUILDING PERMIT OR CERTIFICATE OF OCCUPANCY BE ISSUED BY THE COUNTY OF JEFFERSON, STATE OF COLORADO, UNTIL SUCH TIME AS THE FOLLOWING HAS BEEN ACCOMPLISHED.

~~(1.) A LETTER OF MAP REVISION FROM THE FEDERAL EMERGENCY MANAGEMENT AGENCY HAS BEEN SUBMITTED TO JEFFERSON COUNTY.~~
~~(2.) A CERTIFICATE OF COMPLIANCE HAS BEEN ISSUED BY THE COUNTY OF JEFFERSON, SIGNIFYING THAT THE LETTER OF MAP REVISION IS CONSISTENT WITH THE FLOODPLAIN REPORT AS APPROVED BY THE BOARD OF COUNTY COMMISSIONERS.~~

~~A CONVEYANCE~~, SALE OR TRANSFER OF A SPECIFIC LOT OR LOTS OR TRACT OR TRACTS OF LAND IDENTIFIED HEREON MAY BE MADE PRIOR TO COMPLIANCE ~~WITH THE PROVISIONS OF~~ THIS PARAGRAPH WHERE THE SUBDIVIDERS AND THE PROPOSED TRANSFEREE, WHO MUST ALSO QUALIFY AS A "SUBDIVIDER" UNDER THE ~~PROVISIONS OF SECTION~~ 30-28-137, C.R.S., AS DEFINED IN SECTION 30-28-101(9), C.R.S., HAVE BEEN GRANTED AN EXEMPTION FROM PLATTING FROM THE BOARD ~~OF COUNTY COMMISSIONERS~~ OF JEFFERSON COUNTY, EXPRESSLY CONDITIONED UPON EXECUTION OF AN EXEMPTION AGREEMENT BETWEEN THE BOARD AND ~~THE SUBDIVIDERS WHEREBY~~ THE TRANSFEREE SUBDIVIDER AGREES IN WRITING TO COMPLIANCE WITH THE SAME REQUIREMENTS AND RESTRICTIONS OF THIS ~~PARAGRAPH AND ALL~~ PERTINENT PROVISIONS RELATED THERETO.

GENERAL NOTES

subdivide the property into 6 lots for two-family units (duplex), allowing a total of 6 dwelling units

1. THE PURPOSE OF THIS ~~MINOR~~ PLAT IS TO ~~CREATE SIX (6) PLATTED LOTS FOR SINGLE FAMILY UNITS.~~

2. ANY PERSON WHO KNOWINGLY REMOVES, ALTERS OR DEFACES ANY PUBLIC LAND SURVEY MONUMENT OR LAND BOUNDARY MONUMENT OR ACCESSORY COMMISTS A CLASS TWO (2) MISDEMEANOR PURSUANT TO STATE STATUTE 18-4-508, C.R.S.

3. DISTANCES ON THIS PLAT ARE EXPRESSED IN U.S. SURVEY FEET AND DECIMALS THEREOF. A U.S. SURVEY FOOT IS DEFINED AS EXACTLY 1200/3937 METER.

4. NOTICE: ACCORDING TO COLORADO LAW, YOU MUST COMMENCE ANY LEGAL ACTION BASED UPON ANY DEFECT IN THIS SURVEY WITHIN THREE YEARS AFTER YOU FIRST DISCOVER SUCH DEFECT. IN NO EVENT, MAY ANY ACTION BASED UPON ANY DEFECT IN THIS SURVEY BE COMMENCED MORE THAN TEN YEARS FROM THE DATE OF CERTIFICATION SHOWN HEREON.

5. THIS PLAT, AND THE INFORMATION HEREON, MAY NOT BE USED FOR ANY ADDITIONAL OR EXTENDED PURPOSES BEYOND THAT FOR WHICH IT WAS INTENDED AND MAY NOT BE USED BY ANY PARTIES OTHER THAN THOSE TO WHICH IT IS CERTIFIED.

6. THIS SURVEY DOES NOT CONSTITUTE A TITLE SEARCH BY POWER SURVEYING COMPANY, INC. TO DETERMINE TITLE OR EASEMENTS OF RECORD. RESEARCH FOR THIS SURVEY WAS PERFORMED IN ACCORDANCE WITH CRS 38-51-106 AND THE RULES OF PROCEDURE AND BOARD POLICY STATEMENTS OF THE STATE BOARD OF LICENSURE FOR ARCHITECTS, PROFESSIONAL ENGINEERS AND PROFESSIONAL LAND SURVEYORS, SPECIFICALLY THOSE BOARD RULES AND POLICY STATEMENTS RELATING TO THE DEPICTION OF EASEMENTS AND RIGHTS OF WAY ON SUBDIVISION PLATS.

TITLE COMMITMENT NUMBER K70849185, DATED SEPTEMBER 4, 2024 AT 5:00 P.M. PREPARED BY OLD REPUBLIC NATIONAL TITLE INSURANCE WAS RELIED UPON FOR ALL INFORMATION REGARDING EASEMENTS OF RECORD, RIGHTS OF WAY, TITLE OF RECORD AND CIVIL COURT ACTIONS OF RECORD.

7. THIS SUBDIVISION PLAT WAS ORIGINALLY PREPARED ON JULY 29, 2022.

8. BASIS OF BEARINGS: SOUTH 89°56'48" EAST, A DISTANCE OF 2651.36 FEET, BEING THE BEARING OF THE NORTH LINE OF THE SOUTHWEST QUARTER OF SECTION 1, TOWNSHIP 4 SOUTH, RANGE 70 WEST OF THE 6TH P.M., AS DEFINED AND MEASURED BETWEEN A 3-1/4" DIAMETER ALUMINUM CAP IN RANGE BOX AT THE WEST END AND A 3-1/4" DIAMETER ALUMINUM CAP IN RANGE BOX AT THE WEST END.

9. ANY MAN-MADE CHANGE TO IMPROVED OR UNIMPROVED REAL ESTATE, INCLUDING BUT NOT LIMITED TO BUILDINGS OR OTHER STRUCTURES, MINING, DREDGING, FILLING, GRADING, PAVING, EXCAVATION OR DRILLING OPERATIONS IS NOT PERMITTED WITHIN THE 100-YEAR FLOODPLAIN UNLESS A FLOODPLAIN DEVELOPMENT PERMIT IS FIRST OBTAINED PURSUANT TO FLOODPLAIN SECTION OF THE JEFFERSON COUNTY ZONING RESOLUTION

10. ALL GENERAL NOTES, DEDICATIONS AND RESTRICTIONS AS SHOWN ON VERNON GARDENS SECOND FILING, EXEMPTION SURVEY NO. 2 AS RECORDED AT REC. NO. F0342669 SHALL APPLY UNLESS SPECIFICALLY AMENDED AND SUPERSEDED HEREBY.

11. THE APPROVED DRAINAGE REPORT AND PLANS FOR VERNON GARDENS SECOND FILING, EXEMPTION SURVEY NO. 2 ADJUSTMENT #1 ARE ON FILE WITH THE JEFFERSON COUNTY PLANNING AND ZONING DIVISION. THE "DRAINAGE SYSTEM" INCLUDES THE DRAINAGE FACILITIES, DETENTION POND(S) AND ASSOCIATED APPURTENANCES AS DESCRIBED ON THE APPROVED DRAINAGE PLANS. NO MODIFICATIONS TO THE DRAINAGE SYSTEM SHALL BE ALLOWED WITHOUT PRIOR APPROVAL FROM JEFFERSON COUNTY. THE DRAINAGE SYSTEM SHALL BE OWNED AND MAINTAINED BY THE HOMEOWNERS ASSOCIATION OR EQUIVALENT ENTITY. THE DRAINAGE SYSTEM SHALL BE MAINTAINED BY THE SUBDIVIDER, ITS SUCCESSORS OR ASSIGNS UNTIL SUCH TIME AS THE HOMEOWNERS ASSOCIATION OR EQUIVALENT ENTITY ACCEPTS SUCH RESPONSIBILITY

ACCEPTANCE CERTIFICATE

THE FOREGOING INSTRUMENT IS APPROVED FOR FILING; AND CONVEYANCE OF THE EASEMENTS ARE ACCEPTED BY THE COUNTY OF JEFFERSON, STATE OF COLORADO, THIS _____ DAY OF _____, 20 _____.
THE COUNTY SHALL UNDERTAKE MAINTENANCE OF ANY SUCH STREETS/ROADS AND PUBLIC WAYS ONLY AFTER CONSTRUCTION THEREOF HAS BEEN SATISFACTORILY COMPLETED BY THE DEVELOPER AND ACCEPTED BY THE COUNTY.

_____ CLERK

_____ CHAIRMAN, BOARD OF COUNTY COMMISSIONERS

VACATION CERTIFICATE

A DRAINAGE EASEMENT AS SUPERSEDED BY THIS INSTRUMENT AND AS ORIGINALLY GRANTED PER AN EASEMENT DEED RECORDED IN JEFFERSON COUNTY RECORDS AT RECEPTION NUMBER F0342668, ARE HEREBY VACATED THIS _____ DAY OF _____, 20 _____.

_____ CHAIRMAN, BOARD OF COUNTY COMMISSIONERS

SURVEYOR'S CERTIFICATE

I, RICHARD BRUCE GABRIEL, A PROFESSIONAL LAND SURVEYOR IN THE STATE OF COLORADO, DO HEREBY CERTIFY THAT THE SURVEY OF VERNON GARDENS SECOND FILING, EXEMPTION SURVEY NO. 2 ADJUSTMENT #1 WAS MADE BY ME OR UNDER MY DIRECT SUPERVISION ON THE 29TH DAY OF JULY, 2022, THAT THE SURVEY IS BASED UPON MY KNOWLEDGE, INFORMATION AND BELIEF, IT HAS BEEN PREPARED IN ACCORDANCE WITH APPLICABLE STANDARDS OF PRACTICE, THE SURVEY IS NOT A GUARANTY OR WARRANTY, EITHER EXPRESSED OR IMPLIED, AND THE ACCOMPANYING PLAT ACCURATELY AND PROPERLY SHOWS SAID SUBDIVISION AND THE SURVEY THEREOF.

RICHARD B. GABRIEL, P.L.S.
COLORADO LICENSE No. 37929
for and on behalf of Power Surveying Company, Inc.
6911 Broadway
Denver, CO 80221
(303) 907-5548
www.powersurveying.com

CLERK AND RECORDER'S CERTIFICATE

ACCEPTED FOR FILING IN THE OFFICE OF THE COUNTY CLERK AND RECORDER OF JEFFERSON COUNTY AT GOLDEN, COLORADO, ON THIS_____DAY OF_____, 20_____ AT_____ O'CLOCK __.M.

JEFFERSON COUNTY CLERK AND RECORDER

BY: DEPUTY CLERK

POWER™ Surveying Company, Inc.
Established 1948
6911 BROADWAY
Denver, CO 80221
PH. 303-702-1617
FAX. 303-702-1488
www. powersurveying.com

TYPE OF SUBMITTAL:	MINOR SUBDIVISION PLAT
PREPARATION DATE:	AUGUST 30, 2024
REVISION DATE	
REVISION DATE	
REVISION DATE	
JOB No. 501-22-118	Dwg No. 501-22-118.dwg

SHEET 1 OF 2

RECEPTION NO. .

VERNON GARDENS SECOND FILING, EXEMPTION SURVEY No. 2 ADJUSTMENT #1

CASE NUMBER 22-132293PF

A Subdivision OF Parcel 1 OF VERNON GARDENS SECOND FILING, EXEMPTION SURVEY NO. 2,
LYING WITHIN THE SOUTHWEST QUARTER (SW 1/4) OF SECTION 1, TOWNSHIP 4 SOUTH, RANGE 70 WEST
OF THE 6TH PRINCIPAL MERIDIAN, COUNTY OF JEFFERSON, STATE OF COLORADO
SHEET 2 OF 2

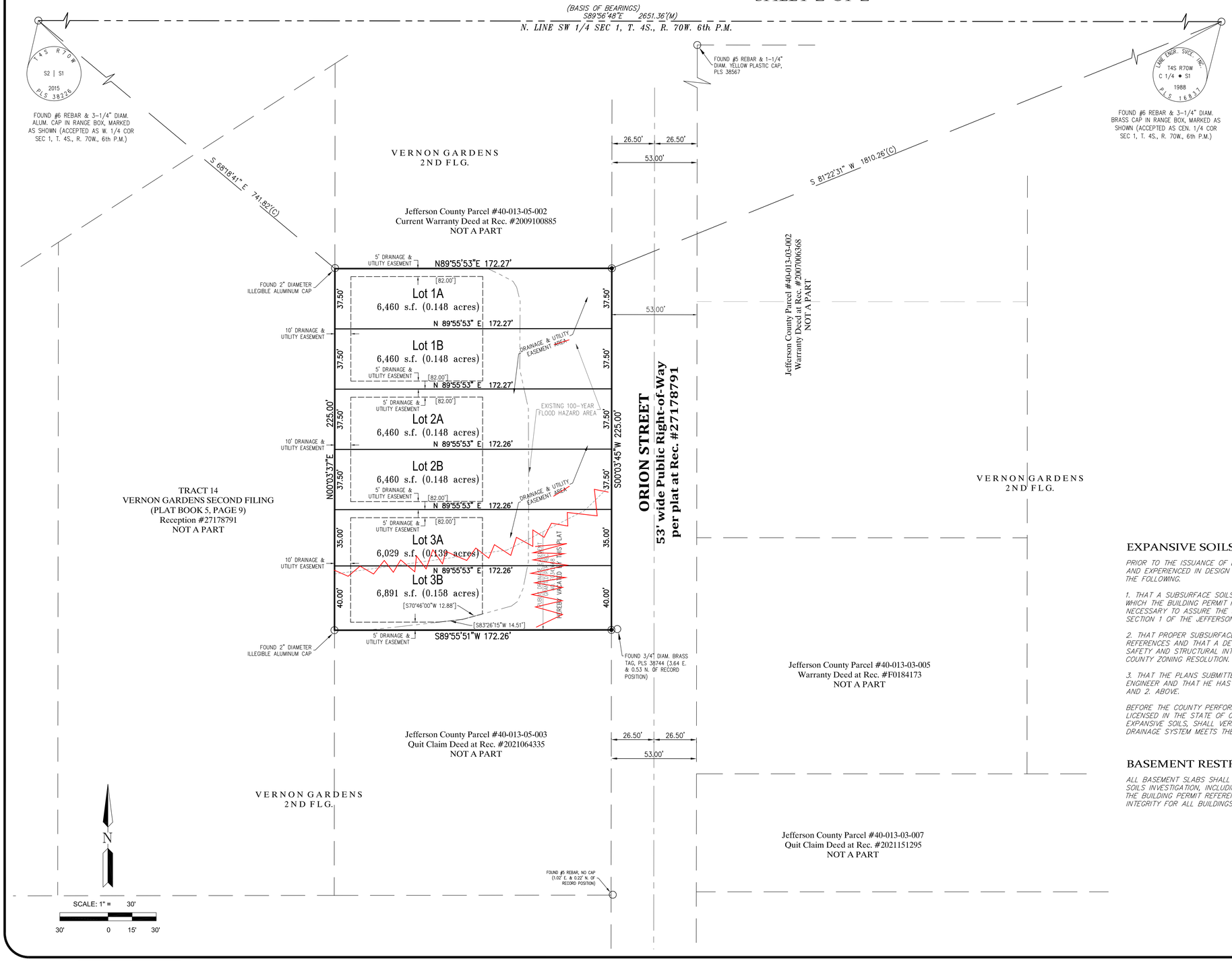

LEGEND OF SYMBOLS & ABBREVIATIONS

- ○ MONUMENT FOUND, AS NOTED
- ◉ SET REBAR & 1-1/2" DIAMETER YELLOW PLASTIC CAP, PLS 37929, TYPICAL UNLESS NOTED OTHERWISE
- (C) CALCULATED
- (M) MEASURED
- (R) RECORD
- LOT 2 LOT NUMBER
- EXISTING RECORD EASEMENT LINE
- EASEMENT GRANTED BY THIS PLAT (DIMENSIONED IN [ ] BRACKETS)
- LOT LINE BY THIS PLAT
- STREET CENTER LINE
- ADJOINING PARCEL OR LOT LINE
- PUBLIC LANDS SURVEY SECTION LINE
- PLAT BOUNDARY LIMITS

LAND USE TABLE

	AREA (SF)	AREA (AC)
LOT 1A	6,460	0.148
LOT 1B	6,460	0.148
LOT 2A	6,460	0.148
LOT 2B	6,460	0.148
LOT 3A	6,029	0.139
LOT 3B	6,891	0.158
TOTAL	38,760	0.889

EXPANSIVE SOILS PLAT RESTRICTION

PRIOR TO THE ISSUANCE OF EACH BUILDING PERMIT, A GEOTECHNICAL ENGINEER, LICENSED IN THE STATE OF COLORADO AND EXPERIENCED IN DESIGN AND CONSTRUCTION OF STRUCTURES ON EXPANSIVE SOILS, SHALL CERTIFY TO THE COUNTY THE FOLLOWING.

1. THAT A SUBSURFACE SOILS INVESTIGATION, INCLUDING A TEST BORING, HAS BEEN CONDUCTED ON THE SPECIFIC LOT TO WHICH THE BUILDING PERMIT REFERENCES AND THAT A DETERMINATION HAS BEEN MADE AS TO THE DESIGN CRITERIA NECESSARY TO ASSURE THE SAFETY AND STRUCTURAL INTEGRITY FOR ALL BUILDINGS AND STRUCTURES AS DEFINED IN SECTION 1 OF THE JEFFERSON COUNTY ZONING RESOLUTION.

2. THAT PROPER SUBSURFACE DRAINAGE HAS BEEN DESIGNED FOR THE SPECIFIC LOT TO WHICH THE BUILDING PERMIT REFERENCES AND THAT A DETERMINATION HAS BEEN MADE AS TO THE DESIGN CRITERIA NECESSARY TO ASSURE THE SAFETY AND STRUCTURAL INTEGRITY FOR ALL BUILDINGS AND STRUCTURES AS DEFINED IN SECTION 1 OF THE JEFFERSON COUNTY ZONING RESOLUTION.

3. THAT THE PLANS SUBMITTED TO BUILDING SAFETY DEPARTMENT HAVE BEEN REVIEWED AND/OR PREPARED BY SUBJECT ENGINEER AND THAT HE HAS VERIFIED THAT SAID PLANS MEET OR EXCEED THE CRITERIA SET FORTH IN PARAGRAPHS 1. AND 2. ABOVE.

BEFORE THE COUNTY PERFORMS A FINAL INSPECTION PURSUANT TO THE JEFFERSON COUNTY BUILDING CODE, AN ENGINEER, LICENSED IN THE STATE OF COLORADO AND EXPERIENCED IN THE FIELD OF DESIGN AND CONSTRUCTION OF STRUCTURES ON EXPANSIVE SOILS, SHALL VERIFY AND CERTIFY THAT THE ACTUAL CONSTRUCTION OF THE FOUNDATION AND SUBSURFACE DRAINAGE SYSTEM MEETS THE SPECIFICATION IN THE PLANS AS SUBMITTED IN THE BUILDING PERMIT APPLICATION.

BASEMENT RESTRICTION

ALL BASEMENT SLABS SHALL BE INSTALLED 3 FT ABOVE THE STATIC GROUNDWATER AS DETERMINED BY A SUBSURFACE SOILS INVESTIGATION, INCLUDING A TEST BORING. THE INVESTIGATION SHALL BE CONDUCTED ON THE SPECIFIC LOT TO WHICH THE BUILDING PERMIT REFERENCES AND THAT A DETERMINATION HAS BEEN MADE TO THE DESIGN CRITERIA TO ASSURE THE INTEGRITY FOR ALL BUILDINGS AND STRUCTURES AS DEFINED IN SECTION 1 OF THE JEFFERSON COUNTY ZONING RESOLUTION.

POWER™ Surveying Company, Inc.
Established 1948
6911 BROADWAY
Denver, CO 80221
PH. 303-702-1617
FAX. 303-702-1488
www. powersurveyinc.com

TYPE OF SUBMITTAL:	MINOR SUBDIVISION PLAT
PREPARATION DATE:	AUGUST 30, 2024
REVISION DATE	
REVISION DATE	
REVISION DATE	
JOB No. 501-22-118	Dwg No. 501-22-118.dwg

SHEET 2 OF 2

SUPPLEMENTAL PLAN

JEFFERSON COUNTY COLORADO | Planning & Zoning Division
100 Jefferson County Parkway, Suite 3550, Golden, Colorado 80419-3550
☎ 303.271.8700 • Fax 303.271.8744 • http://planning.jeffco.us

DEVELOPMENT REPORT

Preliminary Supplemental Information

Name of Plat	Date
961 Orion	11/11/22
Name of Applicant(s)	**Case Number**
Jim Allen	22-132293PF

The following information is being submitted as required by 4 of the Jefferson County Land Development Regulations.

Subdivision

Name: 961 Orion

Owner

Name	Phone		
961 Orion St LLC	(303) 949-6078		
Street	**City**	**State**	**ZIP**
7515 W 17th Ave	Lakewood	CO	80214

Developer

Name	Phone		
Street	**City**	**State**	**ZIP**

Water Source (✔ check which type)

☐ Well
Well Permit # /Water Court Decree:

☑ Central Distribution System
Estimated GPD Required: 750

Sewage Disposal (✔ check which type)

☑ Central Sewage Facility
Estimated GPD to be treated: 750

☐ Septic System

Fire Protection (✔ check which type)

☐ Cistern
Gallon capacity:

☑ Hydrant
Fire Flow of Hydrant(s): 1500

Applicant's signature (required): [signature]

Date: 04/10/2023

REPLAT OF PARCEL 1, VERNON GARDENS FILING NO 2

A REPLAT OF PARCEL 1, VERNON GARDENS FILING NO. 2, EXEMPTION SURVEY NO. 2, LYING WITHIN THE SOUTHWEST 1/4 OF SECTION 1, TOWNSHIP 4 SOUTH, RANGE 70 WEST OF THE 6TH PRINCIPAL MERIDIAN, COUNTY OF JEFFERSON, STATE OF COLORADO

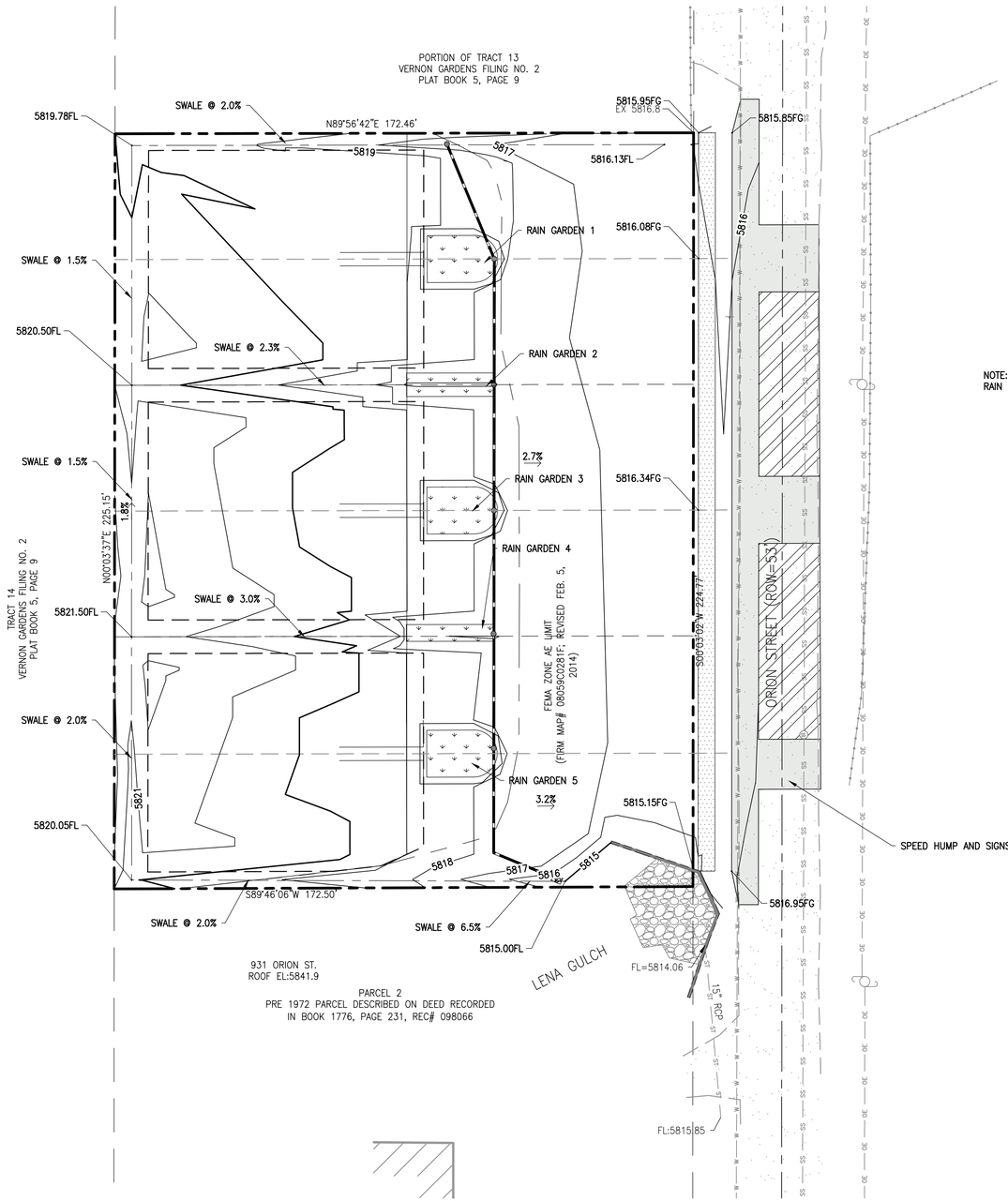

NOTE:
RAIN GARDENS TO BE BUILT WITH EACH DUPLEX UNIT.

OVERALL GRADING PLAN

20 10 0 20 40

SCALE: 1" = 20'

COLORADO LICENSED
JAMES W. ALLEN
42256
PROFESSIONAL ENGINEER

2/4/25

TJC LIMITED
8751 E HAMPDEN AVE, SUITE B10
DENVER, CO 80231
303.840.4742
www.tjcivil.com

		DRAWN BY: JWA	SCALE:	SHEET	OF
SEALED	2/4/25	CHECKED BY: TBM	FEBRUARY 4, 2025	3	10
ISSUED FOR	DATE	PROJECT NO. 2212			

Plotted: Feb 13, 2025 – 1:16pm jimal E:\SHARES (tjc-server1)\Projects\Orion\05_CADD\Orion CDs.dwg Layout Name: Grading

MAPS

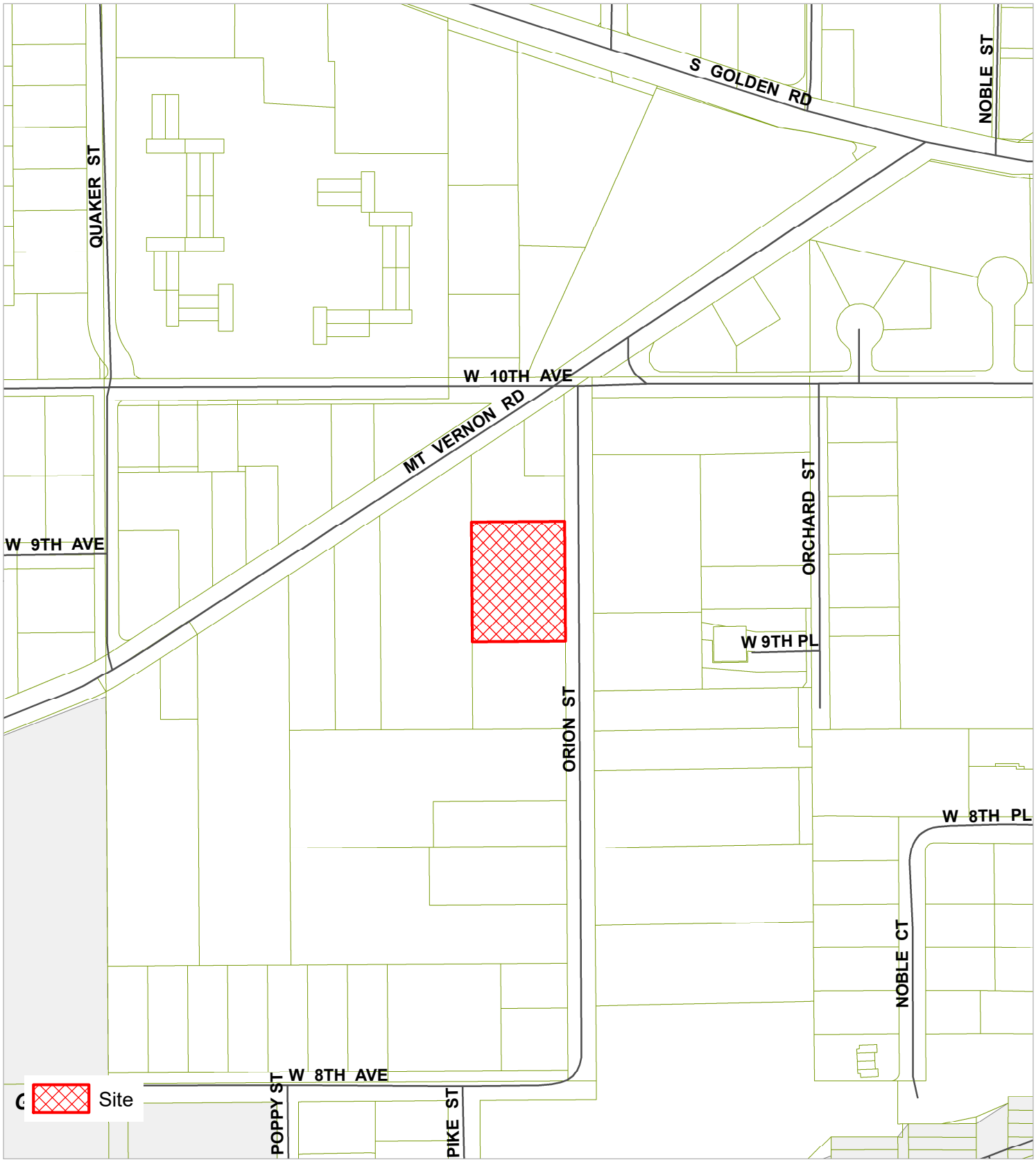

Case Number: 22-1322930PF

Location: Section 1, T4S, R70W

JEFFERSON COUNTY COLORADO

This product has been developed for internal use only. The Planning and Zoning Division makes no warranties or guarantees, either expressed or implied, as to the completeness, accuracy or correctness of such products, nor accepts any liability arising from any incorrect, incomplete or misleading information contained therein.

0 125 250 500 Feet

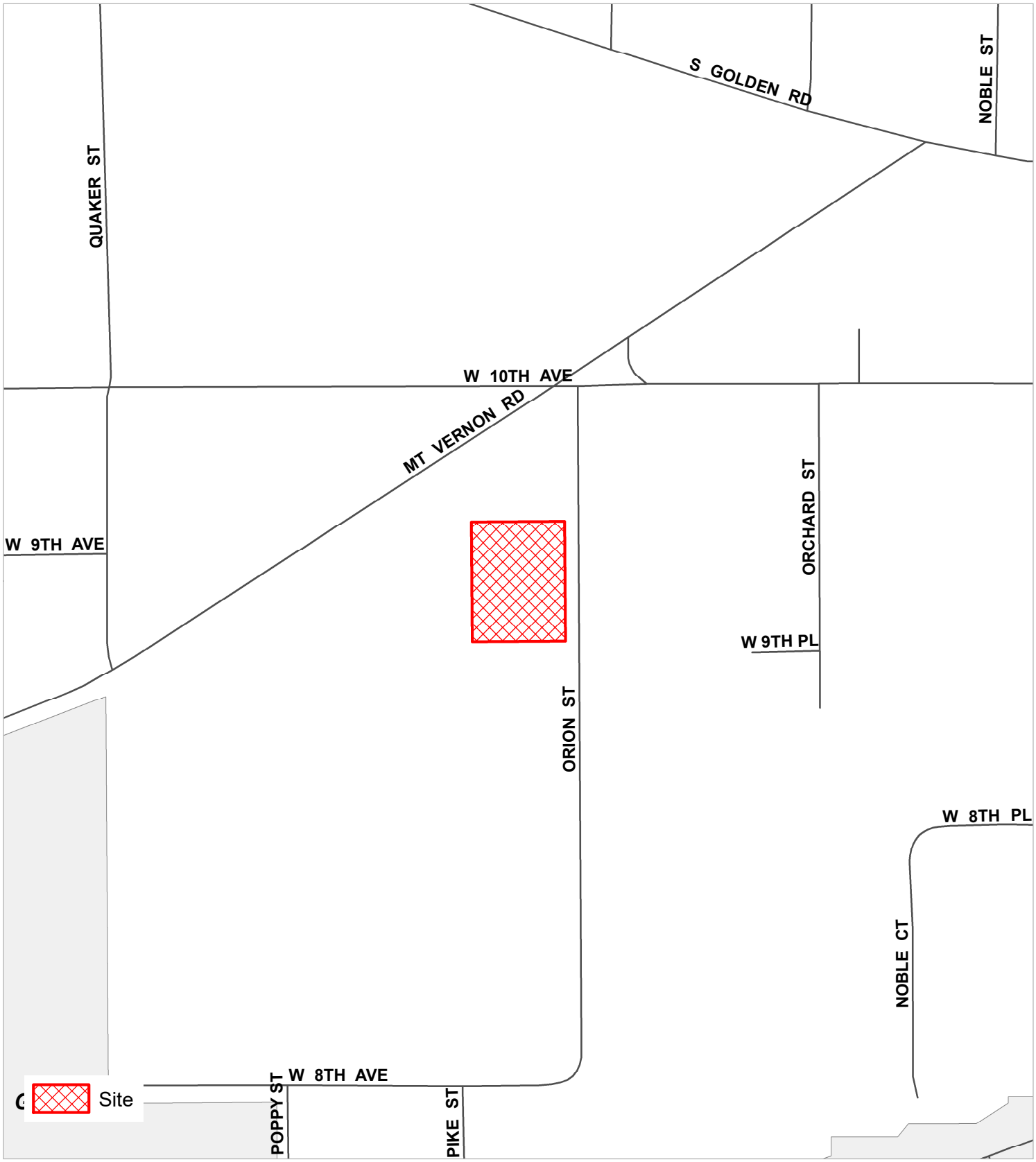

Case Number: 22-1322930PF

Location: Section 1, T4S, R70W

JEFFERSON COUNTY COLORADO

This product has been developed for internal use only. The Planning and Zoning Division makes no warranties or guarantees, either expressed or implied, as to the completeness, accuracy or correctness of such products, nor accepts any liability arising from any incorrect, incomplete or misleading information contained therein.

0 125 250 500 Feet

Case Number: 22-1322930PF

Location: Section 1, T4S, R70W

JEFFERSON COUNTY COLORADO

This product has been developed for internal use only. The Planning and Zoning Division makes no warranties or guarantees, either expressed or implied, as to the completeness, accuracy or correctness of such products, nor accepts any liability arising from any incorrect, incomplete or misleading information contained therein.

0 125 250 500 Feet

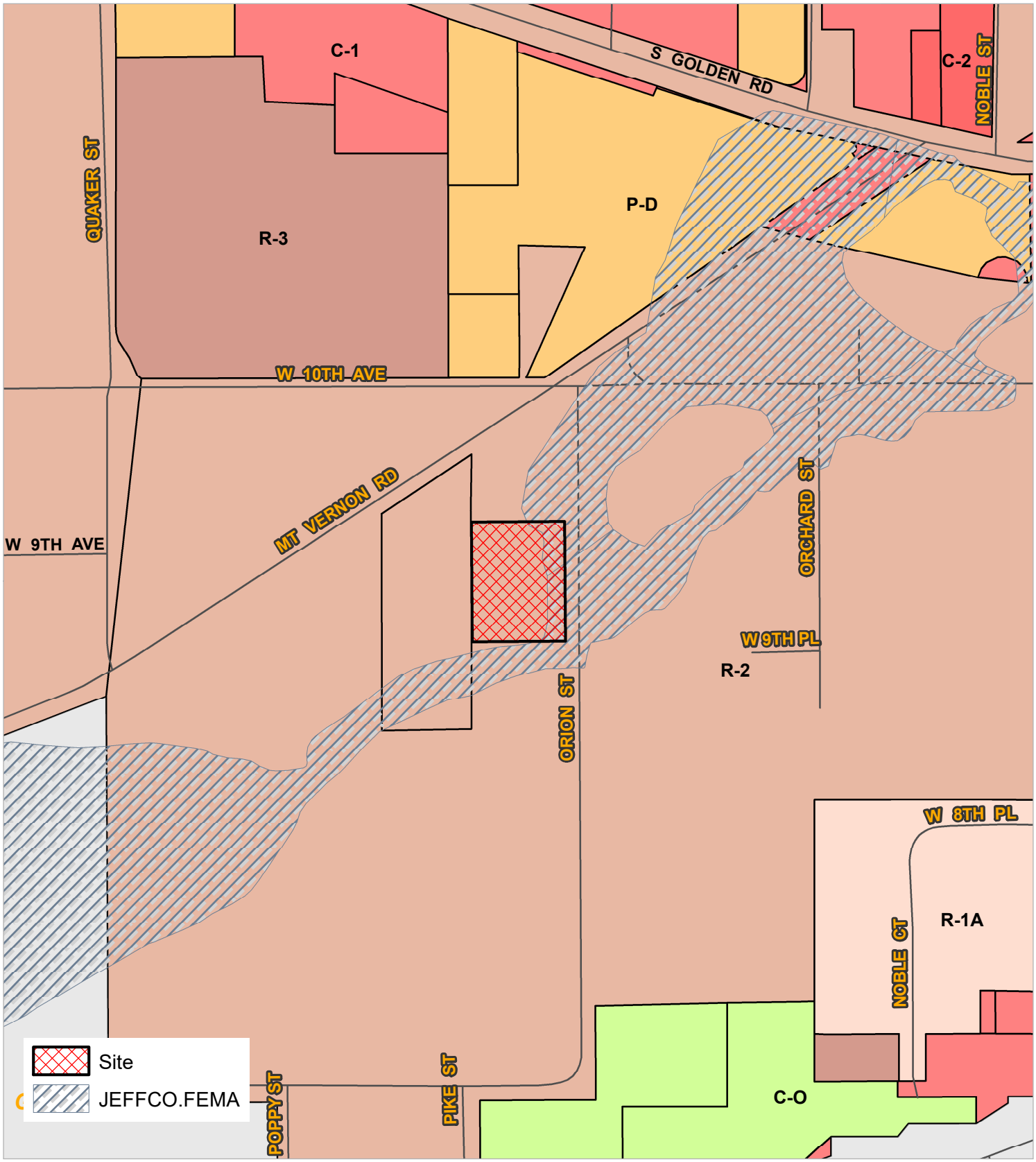

Case Number: 22-1322930PF

Location: Section 1, T4S, R70W

JEFFERSON COUNTY COLORADO

This product has been developed for internal use only. The Planning and Zoning Division makes no warranties or guarantees, either expressed or implied, as to the completeness, accuracy or correctness of such products, nor accepts any liability arising from any incorrect, incomplete or misleading information contained therein.

0 125 250 500 Feet

NOTIFICATION SUMMARY

Notification Summary

JEFFERSON COUNTY COLORADO
Planning and Zoning

100 Jefferson County Parkway,
Suite 3550, Golden, CO 80419
303-271-8700
planning.jeffco.us | pzweb@jeffco.us

Case Number 22-132293PF

As a requirement of the Jefferson County Zoning Resolution, the following Level 1 notification was provided for this proposal.

1. Notification of this proposed development was mailed to property owners within a 500 ft radius of the site and Registered Associations located within a one mile radius of the site.

   These radii are shown on the maps below. The initial notification was mailed at the time of the first referral. Additional notification was mailed 14 days prior to the Planning Commission Hearing identifying the scheduled hearings dates for both the Planning Commission and the Board of County Commissioners.

2. Sign(s), identifying the dates of the hearings before both the Planning Commission and the Board of County Commissioners, were provided to the applicant for posting on the site. The sign(s) were provided to the applicant with instructions that the site be posted 14 days prior to the Planning Commission Hearing.

3. Notification of the hearings before the Planning Commission and the Board of County Commissioners was published in the West Jeffco Hub.

   Lists of the specific property owners and registered associations that received notification are attached to this summary.

Property Owners

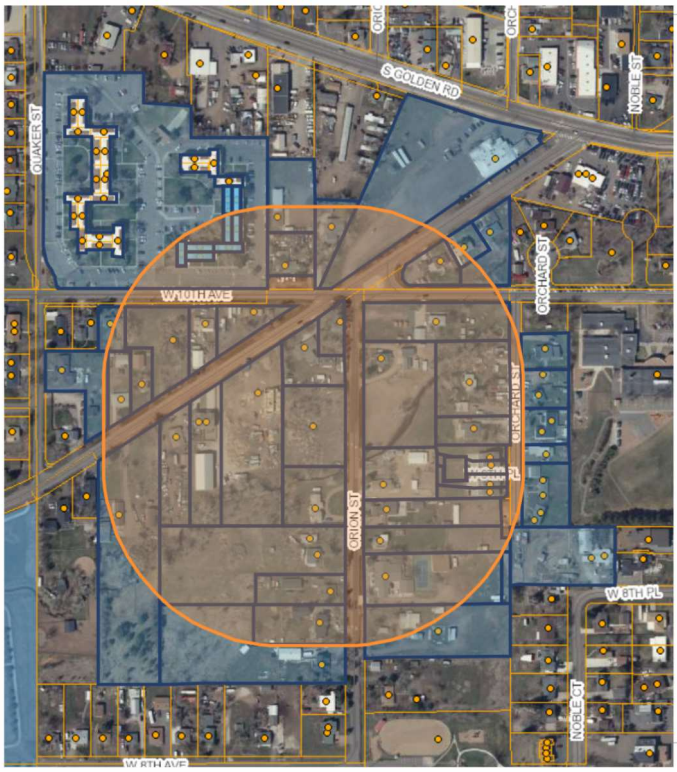

Registered Associations

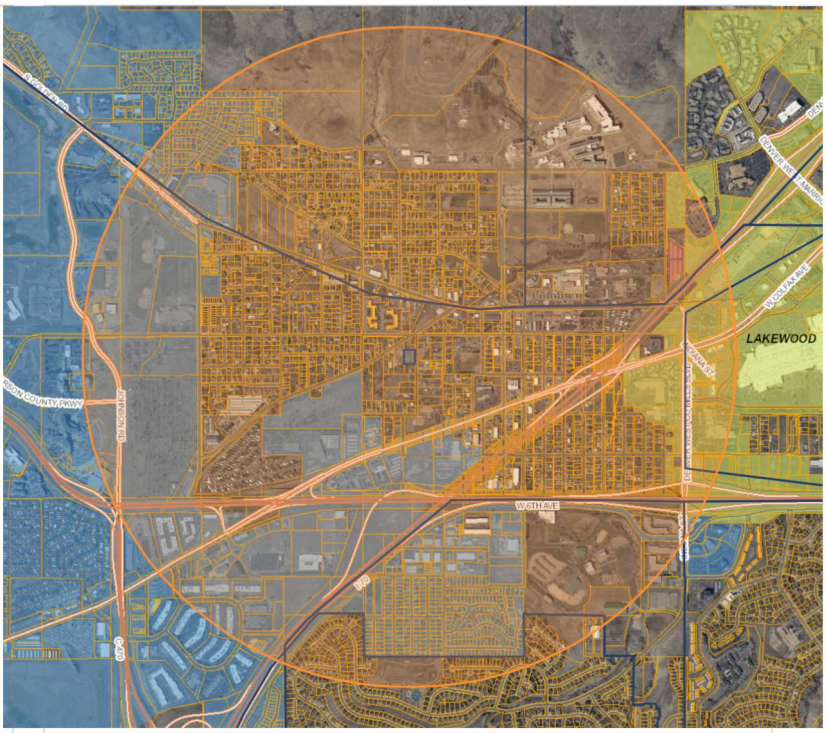

From the Jefferson County Assessor's Office
Home Owners Associations within 1 miles of 40-013-05-022

Subject Properties
Owner
961 ORION STREET LLC

10 HOA within 1 miles of subject properties
HOA Name
APPLEWOOD POA
DANIELS-WELCHESTER HOA
JEFFERSON COUNTY HORSE COUNCIL
MESA VIEW ESTATES
PLAN JEFFCO
ROLLING HILLS EAST HOA
SAVE THE MESAS INC
SIXTH AVE WEST ESTATES
SIXTH AVE WEST HOA
SIXTH AVE WEST TOWNHOME ONE ASSN

Owner	Mail Address	Mail Loc	Mail Zip
TALK TO THE HAND LLC	16005 MT VERNON RD	GOLDEN, CO	80401
FORD TYLER	16259 W 10TH AVE #A1	GOLDEN, CO	80401
MONASTERIO ANTHONY	307 LOOKOUT VIEW CT	GOLDEN, CO	80401
WEIDLER ELIZABETH C	16259 W 10TH AVE A-3	GOLDEN, CO	80401
WALCH ROBERT J	775 RANCH RD 1	STONEWALL, TX	78671
SPICER FRANCES ANNE	16259 W 10TH AVE A5	GOLDEN, CO	80401
TRUJILLO ARIANNE	16259 W 10TH AVE A6	GOLDEN, CO	80401
BROWN THOMAS L	35 YANK WAY	LAKEWOOD, CO	80228
VU HOA	600 BLUE JAY DR	GOLDEN, CO	80401
MAUPIN R LELAND	16259 W 10TH AVE B-3	GOLDEN, CO	80401
PRESS RONALD C	601 16TH ST C	GOLDEN, CO	80401
WILLIAMS CAROL L	5330 S BAHAMA CT	CENTENNIAL, CO	80015
GRAM STEVEN FRED Jr	15259 W 10TH AVE APT	GOLDEN, CO	80401
GOEL PRAMOD	66 CLARE CT	CASTLE ROCK, CO	80108
OSHMAN CHRISTOPHER J	1616 BUCHHANAN ST NE	WASHINGTON, DC	20017
IMPERIAL MOUNTAIN PROPERTIES LLC	182 ANEMORE DR	BOULDER, CO	80302
MAYER CANDICE L	PO BOX 17834	GOLDEN, CO	80401
RUMBAUGH DANIEL G	8885 W 77TH CIR	ARVADA, CO	80005
VU HOA	600 BLUE JAY DR	GOLDEN, CO	80401
TAPPAN IAN A R	16259 W 10TH AVE D-1	GOLDEN, CO	80401
MYERS ANGELA MARIE	30246 MERION LN	EVERGREEN, CO	80439
WILCOX KIMBERLY	13492 W DAKOTA AVE	LAKEWOOD, CO	80228
HEAD JORDAN	11066 W ROWLAND AVE	LITTLETON, CO	80127
BEDARD ANDREW G	16801 W 94TH PL	ARVADA, CO	80007
DAVERSA LORRAINE	23626 SUNROSE LN	GOLDEN, CO	80401
CASTANEDA JOSE L	16259 W 10TH AVE UNIT I-1	GOLDEN, CO	80401
PARRA JOSE E	16259 W 10TH AVE I-2	GOLDEN, CO	80401
HEINICKE ROBERT	4871 S EVANSTON ST	AURORA, CO	80015
GOBLET BETH ANN	16259 W 10TH AVE 1-4	GOLDEN, CO	80401
VU HOA	600 BLUE JAY DR	GOLDEN, CO	80401
STAFFORD CAMERON	16259 W 10TH AVE I-U6	GOLDEN, CO	80401
AUGUSTINUS ANNA MARGARETHA MARIA	16259 W 10TH AVE J- 1	GOLDEN, CO	80401
SPURGEON LARRY	4541 S BRAUN CT	MORRISON, CO	80465
TILLEY J 3 GOLDEN PINES LLC	12191 W 64TH AVE STE 304	ARVADA, CO	80004
SPURGEON LARRY	4541 S BRAUN CT	MORRISON, CO	80465
CANNIFF BRENDA LEIGH	8378 E PHILLIPS PL	CENTENNIAL, CO	80112
LYON RACHEL ROSENBURG	14256 W 2ND AVE	GOLDEN, CO	80401
SAMARCHUK ALEXANDER	16259 W 10TH AVE #K1	GOLDEN, CO	80401
BEDARD ANDREW G	16801 W 94TH PL	ARVADA, CO	80007
PRESS RON	601 16TH ST STE C	GOLDEN, CO	80401
MAJORS MARTIN	10115 W 44TH AVE	WHEAT RIDGE, CO	80033
URBAN FAMILY TRUST	88 DEFRANCE WAY	GOLDEN, CO	80401
DEVORE MELINDA CHLOE	16259 W 10TH AVE	GOLDEN, CO	80401
CISNEROS JEFFREY	16259 W 10TH AVE L1	GOLDEN, CO	80401
BRUNO WILLIAM MICHAEL	16259 W 10TH AVE	GOLDEN, CO	80401
PRESS RON	601 16TH ST STE C	GOLDEN, CO	80401
BAACK STEVEN PAUL	16259 W 10TH AVE L-4	GOLDEN, CO	80401
MCCALL MINDY M	16259 W 10TH AVE L5	GOLDEN, CO	80401
MCCUNE DANIEL RAY	23626 SUNROSE LN	GOLDEN, CO	80401
MAPLE ROBERT DALE JR	16168 W 10TH AVE	GOLDEN, CO	80401
MANSANAREZ BONNIE MAE	3203 VISTA DEL CAMINO	MARINA, CA	93933
PETRIFIED TREE LLC	16005 MT VERNON RD	GOLDEN, CO	80401
GOLDEN PINES CONDOMINIUM ASSOCIATION INC	2180 W STATE RD 434 5000	LONGWOOD, FL	32779
SIMPSON TIMOTHY GEORGE	16090 MT VERNON RD	GOLDEN, CO	80401
FRANK VICTOR WILLIAM	16060 MT VERNON RD	GOLDEN, CO	80401
DB CONCEPTS & CONSULTING LLC	1508 MORNING GLOW DR	WINDSOR, CO	80550
4RN PROPERTY LLC	1648 WASHINGTON ST	DENVER, CO	80203
VINSON TOM	704 2ND ST	GOLDEN, CO	80403
LAWRENCE EDWARD FANNING REVOCABLE TRUST	950 ORCHARD ST	GOLDEN, CO	80401
DEL RIO CARLOS	6018 S ANDES CIR	AURORA, CO	80016

LAWRENCE EDWARD FANNING REVOCABLE TRUST	950 ORCHARD ST	GOLDEN, CO	80401
FIELDS RICHARD C	336 GOLDCO CIR	GOLDEN, CO	80403
FIELDS RICHARD CHARLES	16275 MT VERNON RD	GOLDEN, CO	80401
BETTINGER THOMAS W	16070 W 10TH AVE	GOLDEN, CO	80401
MONDRAGON HENRY	970 ORION ST	GOLDEN, CO	80401
RAY CHAD	975 ORCHARD ST	GOLDEN, CO	80401
KONA HOMES LLC	15533 W 73RD AVE	ARVADA, CO	80007
CLARK DONALD E	950 ORION ST	GOLDEN, CO	80401
JONES LISA G	940 ORION ST	GOLDEN, CO	80401
KORSBON LLC	2025 ARAPAHOE ST	GOLDEN, CO	80401
BUCKLAND MARK DEAN	1911 ARAPAHOE ST APT A	GOLDEN, CO	80401
KUNTZMAN ANDREW S	870 ORION ST	GOLDEN, CO	80401
KUNTZMAN ANDREW S	870 ORION ST	GOLDEN, CO	80401
SILVER DOUBLES LLC	13989 N RUNNING BROOK LN	MARANA, AZ	85658
SILVER DOUBLES LLC	13989 N RUNNING BROOK LN	MARANA, AZ	85658
SILVER DOUBLES LLC	13989 N RUNNING BROOK LN	MARANA, AZ	85658
SILVER DOUBLES LLC	13989 N RUNNING BROOK LN	MARANA, AZ	85658
SILVER DOUBLES LLC	13989 N RUNNING BROOK LN	MARANA, AZ	85658
FELKER FORT III	411 WALNUT ST	GREEN COVE SPRINGS, FL	32043
WARREN ROCKY R	930 QUAKER ST	GOLDEN, CO	80401
VAN PROOYEN SHAWN	16345 MT VERNON RD	GOLDEN, CO	80401
WIEDEMEYER ROBERTA J	16295 MOUNT VERNON RD	GOLDEN, CO	80401
ZEAGER HARVEY D	16305 MT VERNON RD	GOLDEN, CO	80401
RANSLEM DIANA L	16130 MT VERNON RD	GOLDEN, CO	80401
NICHOLAS FELTIS & ROSETTA FELTIS TRUST	16160 MT VERNON RD	GOLDEN, CO	80401
HAMMOND FAMILY TRUST	931 ORION ST	GOLDEN, CO	80401
GUERN DALE	16250 MT VERNON RD	GOLDEN, CO	80401
MATA JESUS M	885 ORION	GOLDEN, CO	80401
BLASE ERIC	861 ORION ST	GOLDEN, CO	80401
THISTLEWOOD DAVID K	845 ORION ST	GOLDEN, CO	80401
REX WILLIAM F	PO BOX 508	GOLDEN, CO	80402
REX WILLIAM F	PO BOX 508	GOLDEN, CO	80402
SCHEIDER HEATHER	PO BOX 614	GOLDEN, CO	80402
VOAG DUSTIN	PO BOX 614	GOLDEN, CO	80401
D&D PROPERTY I LLC	15801 W COLFAX AVE	GOLDEN, CO	80401
WIEDEMEYER ROBERTA J	16295 MOUNT VERNON RD	GOLDEN, CO	80401

REFERRAL AGENCIES

From: P&Z Admin
Bcc: Kirk Hagaman; Kimberly Jordan; Pat OConnell; Public Health EH Land Use; Mike Schuster; Ross Klopf; Elizabeth Stoner; Felicity Selvoski; Kayla Bryson; Lindsay Townsend; Mike Vanatta; Mark Weiden; Michaelyne Baldwin; Alicia Doran; cmalmgren@pleasantviewfire.com; PVWSD.David@comcast.net; pvwsd@comcast.net; engineering@cmwc.net; cmamlmgren@pleasantviewmetro.com; twaller@pleasantviewmetro.org; treed@jeffco.k12.co.us; rhuxley@jeffco.k12.co.us; Matthew.Hanks@jeffco.k12.co.us; Supt@jeffco.k12.co.us; sarah.brucker@state.co.us; joanna.williams@state.co.us; CGS_LUR@mines.edu; jcd@jeffersoncd.com; cdphe_localreferral@state.co.us; coloradoes@fws.gov; oahp@state.co.us; platreview@lumen.com; Alfonzo_Martinez@cable.comcast.com; George, Donna L; Kent.J.Christiansen@usps.gov; krissy.j.summerfield@usps.gov; Jason.g.Eddleman@usps.gov; Mariann.Szasz@usps.gov; matt.martinez@state.co.us; planning@cityofgolden.net; pauric@lakewood.org; aarsch@lakewood.org; submittals@mhfd.org; bjhanse2@gmail.com; d-braden@comcast.net; danielswelchester@gmail.com; franevers18@gmail.com; cici@acmhoa.com; colleen@acmhoa.com; mpoolet@gmail.com; jklitz@comcast.net; jscott@firstrounders.com; enoyes@mbpros.net; edeegail@yahoo.com; donaldgparker@gmail.com; klast@comcast.net; marti44@aol.com
Subject: 22-132293PF FIRST ELECTRONIC REFERRAL FOR PRELIMINARY & FINAL PLAT
Date: Monday, May 22, 2023 12:52:00 PM

ELECTRONIC REFERRAL

-

JEFFERSON COUNTY, COLORADO

Documents related to a Preliminary and Final Plat have been submitted to Jefferson County Planning and Zoning. This case is now beginning the 1st Referral part of the process. Please review the specific electronic documents related to the 1st Referral found **here**. **Comments on the Preliminary and Final Plat should be submitted electronically to the Case Manager by the due date below.**

Case Type: Preliminary and Final Plat
Case Number: 22-132293PF
Case Name: 961 Orion Subdivision
Address: 961 Orion Street; Golden, CO 80401
General Location: South of the intersection of Orion Street and W 10th Ave
Purpose: To Subdivide the 0.89 Acre Property into 6 Single Family Attached Lots
Comments Due: **Monday June 12th, 2023**
Case Manager: Benjamin Johnson
Contact Information: bzjohnso@jeffco.us 303-271-8705

Additional information related to this case can be viewed **here**. Some of the links on this page that may be helpful are the links to the case file (public documents), to the Jeffco mapping system (jMap) and to the case tracking system (general application details).

Internal Agencies:	***External Agencies:***	***Registered Associations (HOA's)***
Addressing Assessor Cartography County Geologist Jeffco Public Health Planning/Zoning Administration Planning Engineering Open Space JeffCo Historical Commission Transportation and Engineering Road & Bridge District I Weed and Pest	Pleasant View Fire Protection District Pleasant View Water and Sanitation District Consolidated Mutual Water Pleasant View Metropolitan District Jefferson County Public Schools (R-1 School District) Division of Water Resources, State Engineer's Office Colorado Geological Survey Soils Conservation District Colorado Department of Public Health and Environment US Fish and Wildlife Colorado Historical Society LUMEN	Within 1 mile ***Adjacent Property Owners:*** Within 500 feet

	Comcast Xcel Energy Post Office Colorado Parks and Wildlife City of Golden City of Lakewood Mile High Flood District	

REFERRAL COMMENTS

ADDRESSING

MEMO

To: Benjamin Johnson
FROM: Christine Derby
SUBJECT: 22-132293PF 961 Orion Street
DATE: June 8, 2023

Addressing offers the following comments on this proposal:

1. The purpose of this Preliminary and Final Plat is to Subdivide the property into 6 lots for single-family attached units.

2. Access is off Orion Street.

3. There is a valid existing address, 961 Orion Street, in the addressing database. This address will be retained, and New Addresses will be issued based on access once the Plat is approved and recorded.

Please let me know if you have any questions.

Benjamin Johnson

From: AUTOMAILER@JEFFCO.US
Sent: Wednesday, November 27, 2024 10:38 AM
To: Benjamin Johnson
Cc: Kirk Hagaman
Subject: 22 132293 PF - Agency Response

Case Number: 22 132293 PF
Case Type: Preliminary - Final Plat
Case Name: 961 Orion St
Review: Cartographic
Results: Comments Sent (no further review)
Review Comments: Carto comments were addressed. Only issue is Preparation Date was just changed after 1st referral, should have been kept and a 2nd Revision Date added, but probably not major enough to send for 3rd referral but just wanted to comment for the record.
Scheduled End Date:
Reviewer: Kirk Hagaman
Description: To subdivide the property into 6 lots for single-family attached units.

COLORADO
Department of Public Health & Environment

Thank you for contacting the Colorado Department of Public Health and Environment (CDPHE). Please note that the following requirements and recommendations apply to many but not all projects referred by local governments. Also, they are not intended to be an exhaustive list and it is ultimately the responsibility of the applicant to comply with all applicable rules and regulations. CDPHE's failure to respond to a referral should not be construed as a favorable response.

Hazardous and Solid Waste

The applicant must comply with all applicable hazardous and solid waste rules and regulations.

Hazardous waste regulations are available here:
https://www.colorado.gov/pacific/cdphe/hwregs.

Solid waste regulations are available here:
https://www.colorado.gov/pacific/cdphe/swregs.

Applicable requirements may include, but are not limited to, properly characterizing all wastes generated from this project and ensuring they are properly managed and disposed of in accordance with Colorado's solid and hazardous waste regulations.

If this proposed project processes, reclaims, sorts, or recycles recyclable materials generated from industrial operations (including, but not limited to construction and demolition debris and other recyclable materials), then it must register as an industrial recycling facility in accordance with Section 8 of the Colorado Solid Waste Regulations. The industrial recycling registration form is available here:
https://www.colorado.gov/pacific/cdphe/sw-recycling-forms-apps.

If you have any questions regarding hazardous and/or solid waste, please contact CDPHE's Hazardous Materials and Waste Management Division (HMWMD) by emailing comments.hmwmd@state.co.us or calling 303-692-3320.

Water Quality

The applicant must comply with all applicable water quality rules and regulations.
The Water Quality Control Division (WQCD) administers regulatory programs that are generally designed to help protect both Colorado's natural water bodies (the clean water program) and built drinking water systems. Applicants must comply with all applicable water quality rules and regulations relating to both clean water and drinking water. All water quality regulations are available here:
https://cdphe.colorado.gov/water-quality-control-commission-regulations.

Clean Water Requirements

Stormwater

Applicable clean water requirements may include, but are not limited to, obtaining a stormwater discharge permit if construction activities disturb one acre or more of land or if they are part of a larger common plan of development that will disturb one or more acres of land. In determining the area of construction disturbance, WQCD looks at the entire plan, including disturbances associated with utilities, pipelines or roads constructed to serve the facility.

Please use the Colorado Environmental Online Services (CEOS) to apply for new construction stormwater discharge permits, modify or terminate existing permits and change permit contacts.

For CEOS support please see the following WQCD website:
https://cdphe.colorado.gov/cor400000-stormwater-discharge
or contact:
Email: cdphe_ceos_support@state.co.us or cdphe_wqcd_permits@state.co.us
CEOS Phone: 303-691-7919
Permits Phone: 303-692-3517

Domestic Wastewater

Some projects with wastewater collection may have domestic wastewater treatment works (i.e., treatment plant, interceptor sewer, or lift station) with a design capacity to receive greater than 2,000 gallons per day (gpd) and are subject to state-wide site location, design, and permitting requirements implemented by the Water Quality Control Division. State review and approval of the site location application and design is required by the Colorado Water Quality Control Act (Act), Section 25-8-702, C.R.S. which states in part that:

> *"No person shall commence the construction of any domestic wastewater treatment works or the enlargement of the capacity of an existing domestic wastewater treatment works, unless the site location and the design for the construction or expansion have been approved by the division."*

State review may also be necessary for projects with multiple on-site wastewater treatment systems (OWTS) on a single property, unless the OWTS meet the requirements of division's "Site Application Policy 6: Multiple On-Site Wastewater Treatment Systems" (Policy 6).

If applicable, the project would need to meet all applicable regulatory requirements including, but not limited to, site location and design review, discharge permitting, having a certified operator; and routine monitoring and reporting. For questions regarding domestic wastewater regulation applicability or other assistance and resources, visit these websites:
https://cdphe.colorado.gov/design
https://cdphe.colorado.gov/clean-water-permitting-sectors

Drinking Water Requirements

The definition of a public water system is self-implementing. It is the responsibility of all water systems in Colorado to assess whether their system is a public water system and to comply with the regulations accordingly. There is not a notification process whereby a system only becomes a public water system if the Department notifies that system. A system becomes subject to regulation as a public water system at the point the system begins operating a system meeting the definition of a public water system under Regulation 11.

Some projects may also need to address drinking water regulations if the proposed project meets the definition of a "Public Water System" per the Colorado Primary Drinking Water Regulations (Regulation 11):

> *A Public Water System means a system for the provision to the public of water for human consumption through pipes or other constructed conveyances, if such system has at least fifteen service connections or regularly serves an average of at least 25 individuals daily at least 60 days per year. A public water system is either a community water system or a non-community water system. Such term does not include any special irrigation district. Such term includes:*
>
> > *(a) Any collection, treatment, storage, and distribution facilities under control of the supplier of such system and used primarily in connection with such system.*
> >
> > *(b) Any collection or pretreatment storage facilities not under such control, which are used primarily in connection with such system.*

If applicable, the project would need to meet all applicable requirements of Regulation 11 including, but not limited to, design review and approval; technical, managerial and financial review and approval; having a certified operator; and routine monitoring and reporting. If it is determined that your facility meets the definition of a public water system please submit a drinking water inventory update form to the department. For questions regarding drinking water regulation applicability or other assistance and resources, visit these websites:

https://cdphe.colorado.gov/drinking-water
https://cdphe.colorado.gov/dwtrain

If you have any other questions regarding either clean or drinking water quality, please contact CDPHE's WQCD by emailing cdphe.commentswqcd@state.co.us or calling 303-692-3500.

Air Quality

The applicant must comply with all relevant state and federal air quality rules and regulations. Air quality regulations are available here: https://www.colorado.gov/pacific/cdphe/aqcc-regs.

Air Pollutant Emissions Notices (APENs) and Permits

Applicable requirements may include, but are not limited to, reporting emissions to the Air Pollution Control Division (APCD) by completing an APEN. An APEN is a two in one form for reporting air emissions and obtaining an air permit, if a permit will be required. While only businesses that exceed the Air Quality Control Commission (AQCC) reporting thresholds are required to report their emissions, all businesses - regardless of emission amount - must always comply with applicable AQCC regulations.

In general, an APEN is required when uncontrolled actual emissions for an emission point or group of emission points exceed the following defined emission thresholds:

Table 1 APEN Thresholds		
Pollutant Category	**UNCONTROLLED ACTUAL EMISSIONS**	
	Attainment Area	**Non-attainment Area**
Criteria Pollutant	**2 tons per year**	**1 ton per year**
Lead	**100 pounds per year**	**100 pounds per year**
Non-Criteria Pollutant	**250 pounds per year**	**250 pounds per year**

Uncontrolled actual emissions do not take into account any pollution control equipment that may exist. A map of the Denver Metropolitan Ozone Non-attainment area can be found on the following website: http://www.colorado.gov/airquality/ss_map_wm.aspx.

In addition to these reporting thresholds, a Land Development APEN (Form APCD-223) may be required for land development. Under Colorado air quality regulations, land development refers to all land clearing activities, including but not limited to land preparation such as excavating or grading, for residential, commercial or industrial development. Land development activities release fugitive dust, a pollutant regulation by APCD. Small land development activities are not subject to the same reporting and permitting requirements as large land activities. Specifically, land development activities that are less than 25 contiguous acres and less than 6 months in duration do not need to report air emissions to APCD.

It is important to note that even if a permit is not required, fugitive dust control measures included the Land Development APEN Form APCD-223 must be followed at the site. Fugitive dust control techniques commonly included in the plan are included in the table below.

Control Options for Unpaved Roadways	
Watering Paving Graveling	Use of chemical stabilizer Controlling vehicle speed
Control Options for Mud and Dirt Carry-Out Onto Paved Surfaces	
Gravel entry ways Covering the load	Washing vehicle wheels Not overfilling trucks
Control Options for Disturbed Areas	

Watering	Application of a chemical stabilizer
Revegetation	Controlling vehicle speed
Compaction	Furrowing the soil
Wind Breaks	Minimizing the areas of disturbance
	Synthetic or Natural Cover for Slopes

Additional information on APENs and air permits can be found on the following website: https://www.colorado.gov/pacific/cdphe/air/do-you-need-an-apen. This site explains the process to obtain APENs and air quality permits, as well as information on calculating emissions, exemptions, and additional requirements. You may also view AQCC Regulation Number 3 at https://www.colorado.gov/pacific/cdphe/aqcc-regs for the complete regulatory language.

If you have any questions regarding Colorado's APEN or air permitting requirements or are unsure whether your business operations emit air pollutants, please call the Small Business Assistance Program (SBAP) at 303- 692-3175 or 303-692-3148.

Asbestos and Lead-Based Paint

In Colorado there are regulations regarding the appropriate removal and handling of asbestos and lead-based paint as part of a demolition, renovation, or remodeling project. These regulations are presented in AQCC Number 8 (asbestos) and Number 19 (lead-based paint) which can be found on the following website: https://www.colorado.gov/cdphe/aqcc-regs.

These regulations may require the use of, or inspection by, companies or individuals that are certified to inspect or remove these hazards **prior to renovation or demolition**. APCD must also be notified of abatement or demolition activities prior to beginning any work in the case of asbestos. For additional guidance on these regulations and lists of certified companies and individuals please visit the following website for asbestos: https://www.colorado.gov/cdphe/categories/services-and-information/environment/asbestos and the following website for lead-based paint: https://www.colorado.gov/pacific/cdphe/categories/services-and-information/lead.

If you have any questions about Colorado's asbestos and lead-based paint regulations or are unsure whether you are subject to them please call the Indoor Environment Program at 303-692-3100.

If you have more general questions about air quality, please contact CDPHE's APCD by emailing cdphe.commentsapcd@state.co.us or calling 303-692-3100.

Environmental Justice and Health Equity

CDPHE is dedicated to promoting and protecting the health and environment for all Coloradans. As part of those efforts, we strive to achieve health equity and environmental justice.

ENVIRONMENTAL JUSTICE is the fair treatment and meaningful involvement of all people regardless of race, color, national origin or income. Environmental justice recognizes that all people have a right to breathe clean air, drink clean water, participate freely in decisions that affect their environment, live free of dangerous levels of toxic pollution, experience equal protection of environmental policies, and share the benefits of a prosperous and vibrant pollution-free economy.

HEALTH EQUITY is when all people, regardless of who they are or what they believe, have the opportunity to attain their full health potential. Achieving health equity requires valuing all people equally with focused and ongoing efforts to address inequalities.

The Environmental Justice Act (HB21-1266) builds upon these efforts by declaring a statewide policy to advance environmental justice, defining disproportionately impacted communities, and creating an Environmental Justice Action Task Force, Environmental Justice Ombudsperson, and Environmental Justice Advisory Board. The Environmental Justice Act also directs the Air Quality Control Commission to promulgate certain rules to reduce emissions in disproportionately impacted communities, and to revise its approach to permitting actions in disproportionately impacted communities. The Environmental Justice Act further requires the Air Quality Control Commission to conduct enhanced outreach in disproportionately impacted communities for rulemakings and contested permitting actions.

The Environmental Justice Act's definition of disproportionately impacted communities includes low-income communities, communities of color, and housing cost-burdened communities, as well as communities that experience cumulative impacts and with a history of environmental racism. CDPHE's Climate Equity Data Viewer can be used to identify census block groups that meet those three criteria.

CDPHE notes that certain projects have potential to impact communities of color and low-income communities that are already disproportionately impacted by cumulative impacts across environmental media and challenges outside the environmental context. It is our strong recommendation that your organization consider the potential for disproportionate environmental and health impacts on specific communities within the project scope and take action to avoid, mitigate, and minimize those impacts.

To ensure the meaningful involvement of disproportionately impacted communities, we recommend that you interface directly with the communities in the project area to better understand community perspectives on the project to receive feedback on how it may impact them during development and construction as well as after completion. This feedback should be taken into account wherever possible, and reflected in changes made to the project plan to implement the feedback.

Additionally, to ensure the fair treatment of disproportionately impacted communities, we recommend that you consider substantive measures to avoid, minimize, and mitigate impacts to disproportionately impacted communities. This may include considering alternative facility siting locations, using best management practices to reduce impacts to air, water, soil, noise, light, or odor, or offsetting impacts by reducing impacts from other nearby facilities as appropriate.

We have included some general resources for your reference.

Resources:
CDPHE Environmental Justice Website
CDPHE's Health Equity Resources
CDPHE's "Sweet" Tools to Advance Equity
EPA's Environmental Justice and NEPA Resources

Benjamin Johnson

From: Kayla Redd <KayRed@lakewood.org>
Sent: Wednesday, June 14, 2023 11:18 AM
To: Benjamin Johnson
Subject: --{EXTERNAL}-- FW: 22-132293PF FIRST ELECTRONIC REFERRAL FOR PRELIMINARY & FINAL PLAT

This Message Is From an External Sender

This message came from outside your organization.

Report Suspicious

Hello,

The City of Lakewood's Department of Engineering and the City of Lakewood's Department of Planning do not have any current comments regarding this project.

Thanks,

Kayla Redd
Planning Technician
(303) 987-7505
Pronouns: she/they

CITY OF LAKEWOOD
PLANNING – DEVELOPMENT ASSISTANCE
480 S ALLISON PARKWAY
LAKEWOOD, CO 80226-3127
www.Lakewood.org [lakewood.org]

Lakewood
Planning

COLORADO GEOLOGICAL SURVEY

1801 Moly Road
Golden, Colorado 80401

Matthew L. Morgan
State Geologist and Director

June 12, 2023

Benjamin Johnson
Jefferson County Planning and Zoning
100 Jefferson County Parkway, Suite 3550
Golden, CO 80419

Location:
NW¼ SW¼ Section 1,
T4S, R70W of the 6th P.M.
39.7317, -105.1816

Subject: 961 Orion Subdivision – Preliminary & Final Plat (22-132293PF)
Jefferson County, CO; CGS Unique No. JR-23-0015

Dear Benjamin:

Colorado Geological Survey has reviewed the 961 Orion Subdivision preliminary and final plat referral. The applicant proposes to subdivide the property into six single-family attached lots on approximately 0.89 acres. With this referral, CGS received a request for review (Email dated May 22, 2023); Final Plat (Power Surveying Company, Inc., July 29, 2022); Civil Plans (TJC Limited, December 16, 2022); Phase III Drainage Report (TJC Limited, December 16, 2022); Subsurface Investigation and Engineering Analysis (Complete Engineering Services Inc., June 10, 2022); and other documents.

Based on our review of Complete Engineering Services' report, items required per Section 25 of Jefferson County's Land Development Regulations were not included, such as discussing geologic hazards, minimum depth and laboratory testing requirements, geologic map, etc. Even so, the site is not undermined, does not contain steep slopes, and is outside the Designated Dipping Bedrock Area of Jefferson County. The eastern and southern portions of the site are mapped as lying in a FEMA floodplain (flood hazard zone AE, FIRM Panel 08059C0281F, dated 2/4/2014). We offer the following comments and recommendations.

Lena Gulch erosion setback. The building proposed within Lot 3B (the southern portion of the project area) is directly adjacent to the FEMA floodplain associated with Lena Gulch. Erosional setbacks from Lena Gulch should be established to reduce the risk of damage due to erosion.

Geology and soil/bedrock engineering properties. According to available geologic mapping (Scott, G.R., 1972, Geologic map of the Morrison quadrangle, Jefferson County, Colorado: U.S. Geological Survey, Miscellaneous Geologic Investigations Map I-790-A, scale 1:24,000), the site is underlain by Piney Creek alluvium, consisting of river-deposited clayey silt and sand. Depending on the fines (silt and clay) and organics content, the site soils may exhibit low density, low strength, and compression under loading and/or high water content. Clayey layers, lenses, and pockets can exhibit high swell when wetted and can cause damage to foundations and improvements if not properly identified and mitigated.

Shallow groundwater conditions. Groundwater was observed at about 12 feet below the ground surface during drilling and at depths as shallow as 10 feet below the ground surface following drilling. It is unclear if basements are being considered for the proposed structures. CGS agrees with Complete Engineering Services on page 3, "Groundwater will probably affect excavations deeper than eight feet below existing grade," and with their recommendation, "A **minimum three feet separation** should be maintained between the anticipated seasonal high water table and the bottom of the foundation footings." Perched groundwater will be a constraint if basements,

crawl spaces, or significant cuts are planned. CGS recommends disallowing full depth basement construction on this site unless site grades are raised to satisfy the minimum three feet separation distance (and maintained at all times) or a groundwater management system/plan, as recommended by Complete Engineering Services, is developed.

Foundation perimeter drains. Complete Engineering Services states on page 4, "A drain system shall be constructed around the interior and exterior basement foundation perimeters." Individual foundation perimeter drains are intended to handle small amounts of intermittent water and should not be used to mitigate a persistent shallow groundwater condition. Section 19 of Jefferson County's LDR should be reviewed to determine subsurface groundwater collection systems and perimeter foundation drains requirements.

Thank you for the opportunity to review and comment on this project. If you have questions or require further review, please call me at 303-384-2632 or email acrandall@mines.edu.

Sincerely,

Amy Crandall, P.E.
Engineering Geologist

November 26, 2024
Jefferson County Planning and Zoning Department
Mr. Benjamin Johnson
100 Jefferson County Parkway, Suite 3550
Golden, Colorado 80419-3550

Re: REFERRAL 22-132293PF - 961 Orion St

Dear Mr. Benjamin Johnson,

This letter will acknowledge receipt of your correspondence dated 11/12/24 regarding the above referenced property. Please refer to The Consolidated Mutual Water Company's previous referral letter response dated 06/12/2024.

Please be advised that the above referenced property is in an area served by The Consolidated Mutual Water Company (Company). Our records indicate the property is currently not receiving domestic water from the Company. Domestic water service may be provided to the property subject to compliance with the Company's Bylaws, rules, regulations and requirements for such service.

The Company's rules, regulations and requirements require that each **separate structure be served by a separate tap and meter**. Townhomes can be served per unit if **each unit fronts a company main** or per building if the service is in the **name of an HOA or similar entity**. Please have the applicant contact Missy Thompson at 303-274-7425 for more information on the domestic services.

Fire protection requirements should be verified with the Pleasant View Fire District and those requirements forwarded to this office. At this time, it appears that a main extension, fire line, or fire hydrant(s) are required. A separate meeting will need to be held with the owner/developer to discuss water infrastructure. Please have the applicant contact our Engineering Department at (303) 238-0451.

If you should have any questions or comments regarding this correspondence, please contact this office.

Sincerely,
CA Burtis

Casey Burtis, PE
Manager - Engineering

cc: Kendra Boudrie, CMWCo Business Services Manager
Missy Thompson, CMWCo Tap Sales
Heather Young, PE, CMWCo Project Engineer
Chris Malmgren, Pleasant View Fire Chief

COLORADO
Division of Water Resources
Department of Natural Resources

May 23, 2023

Benjamin Johnson, Case Manager
Jefferson County Planning and Zoning
Transmission via email: bzjohnso@jeffco.us

Re: 961 Orion Subdivision, Case No. 23-132293PF
Part of the NW ¼ SW ¼ of Sec. 1, Twp. 4 South, Rng. 70 West, 6th P.M.
Water Division 1, Water District 7

Dear Benjamin Johnson:

We have received the May 22, 2023 referral concerning the proposal to subdivide 0.891 acres known as Lot 1, Vernon Gardens, Filing No. 2, Exemption Survey No. 2, into six (6) residential duplex lots.

Water Supply Demand

Water will be used for household use and the estimated water demand is 750 gallons per day (0.84 acre-feet/year) for all six (6) lots. The Applicant should be aware that our office uses an estimate of 0.3 acre-feet/year of water demand for a single-family dwelling and that this estimated water demand appears to be low.

Source of Water Supply

The proposed water supply is service provided by the Consolidated Mutual Water Company ("Company"). According to the letter dated May 2, 2022, the Company can serve the subdivision provided that the Applicant is in compliance with the Company's rules and regulations. This office has not received information that these requirements have been met. The Company is provided water from Denver Water and obtains treated water on demand. This office considers Denver Water to be a reliable water source.

State Engineer's Office Opinion

Based upon the above and pursuant to sections 30-28-136(1)(h)(I) and 30-28-136(1)(h)(II), C.R.S., the State Engineer's Office offers the opinion that the proposed water supply is **adequate** and can be **provided without causing injury to decreed water rights**.

Please contact Wenli Dickinson at 303-866-3581 x8206 or Wenli.Dickinson@state.co.us with any questions.

Sincerely,

Ioana Comaniciu, P.E.
Water Resources Engineer

Ec: Referral no. 30759
Applicant (wannamaker1@msn.com)

Benjamin Johnson

From: AUTOMAILER@JEFFCO.US
Sent: Wednesday, November 20, 2024 6:21 PM
To: Benjamin Johnson
Cc: Pat OConnell
Subject: 22 132293 PF - Agency Response

Case Number: 22 132293 PF
Case Type: Preliminary - Final Plat
Case Name: 961 Orion St
Review: County Geologist
Results: Comments Sent (no further review)
Review Comments: Previous comments have been addressed and I have no outstanding comments for this plat.
Scheduled End Date: 20-NOV-24
Reviewer: Pat O Connell
Description: To subdivide the property into 6 lots for single-family attached units.

JEFFERSON COUNTY COLORADO
Planning and Zoning

Planning and Zoning
100 Jefferson County Parkway
Ste. 3550
Golden, CO 80419
303.271.8700 | jeffco.us
pzweb@jeffco.us

PLANNING ENGINEERING MEMORANDUM

TO: Benjamin Johnson, Case Manager
FROM: Ross Klopf, Planning Engineering
DATE: April 14, 2025

RE: 22-132293PA; Plat for a six-lot subdivision located at 961 Orion Street

These comments are based on the application documents

PRELIMINARY AND FINAL PLAT COMMENTS

PRELIMINARY AND FINAL PLAT DOCUMENT

1. Preliminary and Final Plat Content: The Preliminary and Final Plat should include all information required in the LDR Section 6. Please make the revisions in the enclosed redlines.

GRADING AND DRAINAGE

1. Improvements List: Please Make the revisions in the enclosed redlines.

2. Construction Plans: Please make the revisions in the enclosed redlines.

Additional Requirements

1. Construction Documents: Construction documents are required for all construction associated with the plat/exemption or site development plan. Please submit all plans and reports in an electronic PDF format construction plans. The Plans may be either emailed to the case manager or put on a Flash Drive. In addition 2 final signed and stamped paper sets of construction plans and one final signed and stamped drainage report is needed for final approval.

2. Private Maintenance Organization: The applicant will be required to establish an organization (normally a property or homeowners' association) to own and maintain private streets, drainage and detention facilities and common areas unless an existing organization agrees in writing to maintain these improvements.

3. Traffic Impact Fees: LDR Section 33 A.8 requires the payment of TRAFFIC IMPACT FEES when obtaining a building permit on any lot within this development. This development will not be eligible for any credit towards the full amount of the fee. ***See the County's webpage for traffic fees:*** http://jeffco.us/planning-and-zoning/fees/

CONCLUSION

These initial case comments are based solely upon the submitted preliminary application package. They are intended to make the applicant aware of regulatory requirements. Failure by Planning Engineering to note any specific item does not relieve the applicant from conforming to all County regulations. Furthermore, if the proposed site layout and design are altered substantially during subsequent County land development processes (rezoning, platting, exemptions, additional submittals), Planning Engineering reserves the right to modify these initial comments or add appropriate additional comments.

The applicant should respond to these comments. If there are any questions, please contact Ross Klopf at 303-271-8733.

RK
Attachment/Enclosure
c: File

Benjamin Johnson

From: AUTOMAILER@JEFFCO.US
Sent: Friday, June 2, 2023 8:54 AM
To: Benjamin Johnson
Cc: Felicity Selvoski
Subject: 22 132293 PF - Agency Response

Case Number: 22 132293 PF
Case Type: Preliminary - Final Plat
Case Name: 961 Orion St
Review: Historical Commission
Results: Comments Sent (no further review)
Review Comments:

The Historical Commission has reviewed this Plat proposal and has no concerns. There are no historic sites in the vicinity that would be affected by the proposed development.

Scheduled End Date: 06/12/2023
Reviewer: Felicity Selvoski
Description: To subdivide the property into 6 lots for single-family attached units.

October 25, 2024

Jefferson County Planning and Zoning
100 Jefferson County Parkway
Golden, CO 80219

Subject: 22-132293PF 961 Orion St, Golden, CO 80401 aka 23-132293 PF

Attention: Benjamin Johnson

Thank you for notifying Jefferson Conservation District (JCD) of the comment period for the above-mentioned proposal, which is to subdivide the 0.89 acre property into 6 single family attached lots.

The following comments are based on a review of soil types and their impacts on development using tools from the online USDA-NRCS Web Soil Survey.

Soils: Loam/Gravelly Sandy Loam
Loam is the dominant soil type, to a depth of 0-6 inches with stratified gravelly sandy loam from 6 to 46 inches and a restrictive layer may be encountered at more than 80 inches. While this soil type does not generally experience significant swelling, a geotechnical report would better characterize the soils and any risk for building foundations.

Corrosion from Soils
Risk of corrosion pertains to potential soil-induced electrochemical or chemical action that corrodes or weakens uncoated steel or concrete. The rate of corrosion of uncoated steel is related to such factors as soil moisture, particle-size distribution, acidity, and electrical conductivity of the soil. The rate of corrosion of concrete is based mainly on the sulfate and sodium content, texture, moisture content, and acidity of the soil. Special site examination and design may be needed if the combination of factors results in a higher risk of corrosion. Steel or concrete in installations that intersect soil boundaries or soil layers are more susceptible to corrosion than the steel or concrete in installations that are entirely within one kind of soil or within one soil layer.

For uncoated steel, the risk of corrosion is high , and is based on soil drainage class, total acidity, electrical resistivity near field capacity, and electrical conductivity. For concrete, the risk of corrosion is moderate; it is based on soil texture, acidity, and amount of sulfates in the saturation extract. The applicant may wish to consider corrosion risks when designing underground piping.

Landscaping Recommendations
To preserve limited water resources, we recommend landscape plantings (that is trees, shrubs, forbs, and graminoids) be native to the site's specific Jefferson County elevation and/or be drought tolerant to the greatest extent possible. Planting native and drought tolerant species should occur in uncompacted soils or well drained areas. Planting native wildflowers in landscaping is also beneficial to pollinator insects.

Noxious Weeds
With soil disturbance, potential for noxious weed establishment and spread will be increased. Special consideration should be given to the monitoring and control of weeds given the close proximity of Lena Gulch on the south of the property. Managing weeds before, during, and after construction is recommended.

The Colorado Department of Agriculture website has educational resources for landowners to identify and manage noxious weeds. JCD can also provide technical assistance to landowners.

Please contact JCD with any questions.

Sincerely,

JCD Board of Supervisors

Benjamin Johnson

From: PlatReview <PlatReview@lumen.com>
Sent: Tuesday, May 30, 2023 9:03 AM
To: Benjamin Johnson
Cc: Rozsa, Kari
Subject: --{EXTERNAL}-- FW: 22-132293PF FIRST ELECTRONIC REFERRAL FOR PRELIMINARY & FINAL PLAT

This Message Is From an External Sender
This message came from outside your organization.

Report Suspicious

Requester,

Our engineer has reviewed this plat and their comments are: "Lumen does not have an facilities in this area that would impede a new build in this area."
If you require signatures, you can contact the engineer CC'd on this email and if you have any further questions, please don't hesitate to reach out.

Thank you!

Lumen Plat Review
platreview@lumen.com

From: P&Z Admin <PZAdmin@co.jefferson.co.us>
Sent: Monday, May 22, 2023 1:53 PM
Subject: 22-132293PF FIRST ELECTRONIC REFERRAL FOR PRELIMINARY & FINAL PLAT

CAUTION: This email originated outside of Lumen Technologies. Do not click links or open attachments unless you recognize the sender and know the content is safe.

ELECTRONIC REFERRAL

JEFFERSON COUNTY, COLORADO

Documents related to a Preliminary and Final Plat have been submitted to Jefferson County Planning and Zoning. This case is now beginning the 1st Referral part of the process. Please review the specific electronic documents related to the 1st

MEMO

TO: Benjamin Johnson
Jefferson County Planning and Zoning Division

FROM: Tracy Volkman
Jefferson County Environmental Health Services Division

DATE: February 24, 2025

SUBJECT: Case #22-132293 PF
Ryan Wannamaker
961 Orion St

The applicant has met the public health requirements for this platting process.

PROPOSAL SUMMARY
To subdivide the property into 6 lots for single-family attached units.

COMMENTS
Jefferson County Public Health (JCPH) provided comments on August 17, 2021, for the pre-application process for this case and on May 30, 2023, and November 13, 2024 for the platting process for this case. We reviewed the documents submitted by the applicant for this platting process and have the following updated comments:

The applicant must submit the following documents or take the following actions prior to a ruling on the proposed platting of this property. NOTE: Items marked with a "✓" indicate that the document has been submitted, or action has been taken. **Please read the entire document for requirements and information. Please note additional documentation may be required.**

PLATTING REQUIREMENTS (Public Water & Public Sewer Systems)

✓	Date Reviewed	Required Documentation/Actions	Refer to Sections
✓	5/26/2023	Submit a will serve/proof of services letter from the Water and Sanitation District indicating public water and sewer can be provided to the proposed development in accordance with the Land Development Regulation (LDR) 22.	Water/Wastewater
✓	5/26/2023	Submit a Sensory Impact Assessment in accordance with the LDR Section 26 and must be prepared by a qualified professional planner, certified industrial hygienist, or landscape architect or engineer, registered in the State of Colorado.	Sensory Impact

✓	Date Reviewed	Required Documentation/Actions	Refer to Sections
✓	11/13/2024	Submit a notarized Environmental Questionnaire and Disclosure Statement packet, in accordance with the LDR Section 30.	Environmental Site Assessment
✓	02/24/2025	**Submit the source and characteristics of the fill dirt** that has been placed on the property as identified in the notarized Environmental Questionnaire and Disclosure Statement. **List any chemicals contained in the fill and submit safety data sheets for those chemicals.**	Environmental Site Assessment

WATER/WASTEWATER
The applicant provided an updated will serve letter dated May 2, 2022, from the Consolidated Mutual Water District stating public water service is available for the proposed development.

The applicant provided an updated will-serve letter dated May 5, 2022, from the Pleasant View Water and Sanitation District stating public sewer service is available for the proposed development.

SENSORY IMPACT
JCPH has reviewed the Sensory Impact Report dated November 11, 2022. This report complies with requirements set forth in Section 26 of the Jefferson County Land Development Regulation.

The Colorado Revised Statutes (Sections 25-12-101 through 108) stipulate that maximum residential noise levels must comply with the following 25 feet from the property line:
- 55dB(A) between 7:00 a.m. and 7:00 p.m.
- 50dB(A) at all other times.

Colorado Revised Statute 25-12-103 classifies noise that exceeds the maximum permissible noise level as a public nuisance, which is a civil matter between the property owner and the complainant. **Please note:** JCPH and the Colorado Department of Public Health and Environment do not enforce noise complaint nuisances.

ENVIRONMENTAL SITE ASSESSMENT
JCPH has reviewed the Environmental Questionnaire and Disclosure Statement (EQDS) provided by the applicant. The applicant checked "yes" on one category of environmental concern on the cover sheet regarding earthen fill being placed on site from an outside source. The description states it was clean excavation dirt. The applicant was requested in the Public Health report dated May 30, 2023, prepared by Urszula Tyl, JCPH Senior Environmental Health Specialist, to describe the source and characteristics of the fill dirt, and to provide any safety data sheets if chemicals were identified in the fill. This information was not provided as requested. As such, the applicant was required again to provide information describing the source and characteristics of the fill, including any chemicals contained in the fill and submit safety data sheets for those chemicals.

The applicant provided an engineering report dated February 13, 2025, prepared by Complete Engineering Services, Inc. stating the fill consisted of excavated material imported from 1004 4th Street in Golden between August 2021 and September 2021 and does not contain any chemicals or other foreign materials.

Complete Engineering Services, Inc., 2-13-25 fill evaluation:

The test boring for the referenced soil report at 1004 4th Street encountered interbedded claystone and sandstone of the Denver Formation from the surface to the total depth investigated. Material present in the imported fill on 961 Orion Street is disturbed and weathered claystone and sandstone that could have been derived from the Denver Formation.
Available information indicates that the imported fill material placed on 961 Orion Street was obtained from 1004 4th Street in Golden between August 2021 and September 2021 and does not contain any chemicals or other foreign materials.

Please note if suspected contaminated soil(s) are encountered during the construction phase of the proposed development, construction activities must cease, and the soil must be evaluated by a qualified soil engineer licensed in Colorado or equivalent expert to classify the soils and establish mitigation criteria to properly handle and dispose of contaminated soils. The contractor must contact the Colorado Department of Public Health and Environment, Hazardous Material and Waste Management Division at 303.692.3320.

ACTIVE LIVING

JCPH strongly encourages the developer to consider some active living concept such as a central gathering area (gazebo), a community garden or some other built environment component that can foster social connectedness and community interaction. These amenities can promote public health by creating a sense of well-being in the future residents of the proposed development.

AIR

Land development activities that are less than 25 contiguous acres and less than 6 months in duration are exempt from permitting and do not need to report air emissions to the Air Pollution Control Division. However, the developer must use sufficient control measures and have a dust control plan in place to minimize any dust emissions during demolition, land clearing and construction activities. This department will investigate any reports of fugitive dust emissions from the project site. If confirmed, a notice of violation will be issued with appropriate enforcement action taken by the State.

Please be advised that a vehicle tracking pad or equivalent should be placed at egress points to prevent off-property transport of materials during construction.

RADON

As of January 2019, to address the health hazard associated with radiation from radon gas, all new residential construction in Jefferson County must have a radon mitigation system installed in accordance with the Land Development Regulation Section 27 and the International Residential Code, Appendix F.

LANDSCAPE

Landscaping plans should include appropriate water conservation measures. The use of native plant species and/or xeriscaping is strongly encouraged to minimize water quality impacts in the area.

NOTE: These case comments are based solely upon the submitted application package. They are intended to make the applicant aware of regulatory requirements. Failure by Jefferson County Public Health to note any specific item does not relieve the applicant from conforming to all County regulations. Jefferson County Public Health reserves the right to modify these comments, request additional documentation, and or add appropriate additional comments.

Benjamin Johnson

From: AUTOMAILER@JEFFCO.US
Sent: Wednesday, May 31, 2023 8:37 AM
To: Benjamin Johnson
Cc: Kristina Duff
Subject: 22 132293 PF - Agency Response

Follow Up Flag: Follow up
Flag Status: Flagged

Case Number: 22 132293 PF
Case Type: Preliminary - Final Plat
Case Name: 961 Orion St
Review: Open Space
Results: No Comment (no further review)
Review Comments:
Scheduled End Date: 06/12/2023
Reviewer: Kristina Duff
Description: To subdivide the property into 6 lots for single-family attached units.

Benjamin Johnson

From: AUTOMAILER@JEFFCO.US
Sent: Thursday, June 15, 2023 11:56 AM
To: Benjamin Johnson
Cc: Alexander Fowlkes
Subject: 22 132293 PF - Agency Response

Case Number: 22 132293 PF
Case Type: Preliminary - Final Plat
Case Name: 961 Orion St
Review: Planner (Development Review)
Results: Comments Sent (no further review)
Review Comments:

15 ft total side setback required, with a 5 ft minimum. Meaning one side can be 5 and the other 10, or another combination. Additionally buildings must have at least 15 ft of separation between them.

Setbacks and separation are checked at the time of building permits, but since you have 5 ft utility easements on either side you may wish to address them now.

Scheduled End Date: 06/12/2023
Reviewer: Alexander Fowlkes
Description: To subdivide the property into 6 lots for single-family attached units.

PLEASANT VIEW METROPOLITAN DISTRICT FIRE DEPARTMENT
955 Moss St. Golden, CO 80401 Phone: (303) 279-4361 Fax: (303) 278-3430

January 7, 2025

Jefferson County Planning and Zoning Department
100 Jefferson County Parkway, Suite 3550
Golden, Colorado 80419-3550

Attn: Benjamin Case Manager
Contact Info: bzjohnso@jeffco.us 303-271-8705

RE: Sumittal to subdivide the property into six single-family attached lots at 961 Orion Street, Golden, CO.

Case Number 22-132293PF

The property located at 961 Orion Street, Golden CO 80401, Parcel ID 40-013-05-022, is in the Pleasant View Metropolitan District, and the Pleasant View Fire Department will provide fire protection service. Fire service will be provided as long as the provision of the International Fire Code, 2018 edition, including all amendments, is met in the development.

The Pleasant View Metropolitan District has no objection to subdividing the property into six single-family attached lots.

The District has adopted the 2018 International Fire Code with amendments. The Fire Code has minimum requirements for fire flow and fire hydrant locations, listed in Appendix B and C. The proposed development will be subdivided into Six lots to construct six single-family attached units. All dwellings, 3,600 square feet or less, will have a fire flow requirement of 1,000 gallons per minute for 1 hour as amended by the District. For buildings larger than 3,600 square feet, use Table B105.1 (2) in the International Fire Code to determine the fire flow requirements.

The site plan for the property's development has been reviewed, and if the building contractor agrees to install fire sprinklers in all six single-family attached units, Pleasant View Fire will not require an additional fire hydrant to meet the fire flow requirements. If the building contractor does not install fire sprinklers in the six single-family attached units, an additional fire hydrant will be required to meet fire flow. Any improvements to the water system or additional fire hydrants must meet the Consolidated Mutual Water Company rules and regulations. The available water needs will be obtained from the Consolidated Mutual Water Company. The developer/Owner is encouraged to meet with Consolidated Mutual Water Company and the fire department to discuss any infrastructure improvement needed to meet fire flow demands.

Pleasant View Fire Department reserves the right to provide additional comments/requirements when plans are submitted and reviewed per applicable code amendments.

If you have any questions regarding this correspondence, do not hesitate to contact me at (303)279-4361 extension 301or email at cmalmgren@pleasantviewfire.com

Sincerely,

Chris P. Malmgren
Fire Chief

Right of Way & Permits

1123 West 3rd Avenue
Denver, Colorado 80223
Telephone: **303.285.6612**
violeta.ciocanu@xcelenergy.com

November 18, 2024

Jefferson County Planning and Zoning
100 Jefferson County Parkway, Suite 3550
Golden, CO 80419

Attn: Benjamin Johnson

Re: 961 Orion Subdivision, Case # 22-132293PF

Public Service Company of Colorado's (PSCo) Right of Way and Permits Referral Desk has reviewed the plat for **961 Orion Subdivision.** Please be aware PSCo owns and operates existing natural gas and electric distribution facilities along Orion Street.

Public Service Company requests that the following language or plat note is placed on the preliminary and final plats for the subdivision:

> *Ten-foot (10') wide dry utility easements are hereby dedicated on private property adjacent to Orion Street. These easements are dedicated to County of Jefferson for the benefit of the applicable utility providers for the installation, maintenance, and replacement of electric, gas, television, cable, and telecommunications facilities (Dry Utilities). Utility easements shall also be granted within any access easements and private streets in the subdivision. Permanent structures, improvements, objects, buildings, wells, water meters and other objects that may interfere with the utility facilities or use thereof (Interfering Objects) shall not be permitted within said utility easements and the utility providers, as grantees, may remove any Interfering Objects at no cost to such grantees, including, without limitation, vegetation. Public Service Company of Colorado (PSCo) and its successors reserve the right to require additional easements and to require the property owner to grant PSCo an easement on its standard form.*

Public Service Company also requests that all utility easements are depicted graphically on the preliminary and final plats. While these easements should accommodate the majority of utilities to be installed in the subdivision, some additional easements may be required as planning and building progresses.

The property owner/developer/contractor must complete the application process for any new natural gas or electric service, or modification to existing facilities via xcelenergy.com/InstallAndConnect. It is then the responsibility of the developer to contact the

Designer assigned to the project for approval of design details.

Additional easements may need to be acquired by separate document. The Designer must contact the appropriate Right-of-Way Agent.

As a safety precaution, PSCo would like to remind the developer to contact Colorado 811 for utility locates prior to construction.

Violeta Ciocanu (Chokanu)
Right of Way and Permits
Public Service Company of Colorado dba Xcel Energy
Office: 303-285-6612 – Email: violeta.ciocanu@xcelenergy.com

PLEASANT VIEW

Water & Sanitation

May 5, 2022

Re: 961 Orion St.

To Whom It May Concern:

This letter is to certify sewer service will be provided by Pleasant View Water and Sanitation District for the following property; 961 Orion St
Capacity is available in the area subject to the rules, regulations and requirements of the Pleasant View Water & Sanitation District & Metro Water Recovery. Main extension if required, will be at developer's expense.

If you have questions please call 303-279-3391.

Thank you,

Rebecca White

Rebecca White
Office Manager

955 Moss Street Golden, CO 80401 (303) 278-1035 PVWSD@comcast.net

CITIZEN COMMENTS

Benjamin Johnson

From: Henry Mondragon <hmondrag@gmail.com>
Sent: Thursday, June 22, 2023 10:03 PM
To: Benjamin Johnson
Subject: --{EXTERNAL}-- Case Number 22-132293PF 961 Orion St, Golden

Follow Up Flag: Follow up
Flag Status: Flagged

This Message Is From an Untrusted Sender
You have not previously corresponded with this sender.

Report Suspicious

Ben Johnson,

I am writing to make a comment regarding the above address and plans to build 6 lots for single-family attached units.

Our street is not a wide street and all summer long we have motorcycles and people test driving vehicles going up and down the street. A few years ago we applied for and were able to have two speed bumps added along our one-block street. The speed bumps do not deter a great number of speeders along our street.

Now, you want to approve a six-family attached unit structure. During parties and holidays, there are cars blocking both sides of the street and making it difficult to navigate. I can't see how your planned structures will do anything but worsen the situation.

Please, don't allow this to go through.

Sincerely,
Henry Mondragon
970 Orion St, Golden, CO 80401

CURRENT ZONING

Section 30 - Residential District

(orig. 3-26-13)

A. Intent and Purpose

1. The Residential Districts are intended to provide areas for residential development and includes single-family dwellings, two-family dwellings, duplexes, townhomes and multi-family dwellings, where allowed. (orig. 3-26-13)
2. Contained in this section are the allowed land uses, building and lot standards (including minimum setbacks) and other general requirements for each specific residential zone district. (3-26-13)
3. The Residential Zone Districts are divided as follows: (orig. 3-26-13)
   a. Residential-One (R-1)
   b. Restricted Residential (RR)
      (1) Restricted Residential Quarter Acre (RR-1/4)
      (2) Restricted Residential One Half Acre (RR-1/2)
      (3) Restricted Residential One Acre (RR-1)
      (4) Restricted Residential Two Acre (RR-2)
      (5) Restricted Residential Five Acre (RR-5)
      (6) Restricted Residential Ten Acre (RR-10)
   c. Residential-One A (R-1A)
   d. Residential-One B (R-1B)
   e. Residential-One C (R-1C)
   f. Residential-Two (R-2)
   g. Residential-Three (R-3)
   h. Residential-Three A (R-3A)
   i. Residential-Four (R-4)

B. Permitted Uses (orig.3-26-13; am. 7-17-18)

Use	R-1	RR	R-1A	R-1B	R-1C	R-2	R-3	R-3A	R-4
Single-family dwelling	X	X	X	X	X	X	X		
Two-family dwelling or duplex						X	X	X	
Multi-family dwelling or townhome							X	X	
Multi-family dwelling (20 dwelling units to 50 dwelling units per acre).									X
Religious Assemblies and related uses, parish house and/or parsonage.							X	X	X
Private nonprofit museum							X	X	X
Parochial or private schools. Not included are private vocational, trade or professional schools, schools of art, music or dance and schools for subnormal or mentally disturbed adults.							X	X	X
Colleges; not included are private vocational, trade or professional schools, schools of art, music or dance and schools for subnormal or mentally disturbed adults.									X

Use	R-1	RR	R-1A	R-1B	R-1C	R-2	R-3	R-3A	R-4
State licensed daycare or large day –care home or preschool or nursery.							X	X	X
Group Home for up to 8 aged persons not located within 750 ft of another such group home; state licensed group home for up to 8 developmentally disabled persons not located within 750 ft of another such group home; state licensed group home for up to 8 mentally ill persons not located within 750 ft of another such group home or group home for the aged or developmentally disabled persons.	X	X	X	X	X	X	X	X	X
Public park, Class I public recreation facilities.	X	X	X	X	X	X	X	X	X
Class II public recreation facility							X	X	X
Homes for the aged and nursing homes							X	X	X
Hospital, nursing homes and clinics but not including institutions exclusively for the mentally disturbed, or for contagious or infectious diseases.									X
Telecommunications Land Uses shall comply with the provisions of the Telecommunications Uses Section of this Zoning Resolution.	X	X	X	X	X	X	X	X	X
Energy Conversion Systems (ECS) land uses shall comply with the provisions of the Alternative Energy Resources Section of the Zoning Resolution.	X	X	X	X	X	X	X	X	X

C. Accessory Uses (orig.3-26-13; am. 7-17-18)

Use	R-1	RR	R-1A	R-1B	R-1C	R-2	R-3	R-3A	R-4
Private garage, mini structure, storage shed	X	X	X	X	X	X	X	X	X
Private greenhouse and nursery, noncommercial conservatory for plants and flowers.	X								
Private poultry house and pigeon coop with no more than 400 square feet of floor area; private rabbit and chinchilla hut with no more than 100 square feet of floor area.	X								
Private building or kennel for housing dogs, cats and similar domestic pets.[1]	X	X	X	X	X	X	X	X	
Private stable and/or barn for keeping horses, cattle, sheep, goats or other similar domesticated animals. See general requirements below.	X								
Home Occupations provided the requirements and conditions of the Board of Adjustment or the Home Occupation Section of the Zoning Resolution have been met.	X	X	X	X	X	X	X		

Use	R-1	RR	R-1A	R-1B	R-1C	R-2	R-3	R-3A	R-4
Accessory Uses per the Accessory Use Section of the Zoning Resolution.	X	X	X	X	X	X	X	X	X
Commercial service activities, which are accessory to the main use of the building [2]									X

[1] But not including horses, cattle, sheep, goats, chickens, ducks, geese or other fowl. The maximum total number of dogs, cats and similar domestic pets which may be kept shall be 3. Offspring of domestic pets may be kept until weaned.

[2] May be conducted, provided said use is contained within the main building. Cafeterias, offices, studios and personal services such as beauty parlors, barber shops, laundry pick-up stations and pharmacies may be conducted. However, the sum total of commercial uses may not exceed more than 10 percent of the floor area of any single building or structure. The entrance to any such accessory business will be from inside the building. Such accessory use is one which:

a. Is subordinate to and serves the principal building or principal use.
b. Is subordinate in area, extent, or purpose to the principal building or principal use served.
c. Contributes to the comfort, convenience, or necessity of occupants of the principal building or principal use served.
d. Is located on the same lot as the principal building or principal use served.

D. Special Uses (3-26-13)

The following uses shall be permitted only upon review by the Planning Commission and approval by Board of County Commissioners: (orig. 3-26-13; am. 7-17-18)

Use	R-1	RR	R-1A	R-1B	R-1C	R-2	R-3	R-3A	R-4
Religious Assemblies and related uses, parish house and/or parsonage.	X	X	X	X		X			
Private nonprofit museum	X	X	X	X		X			
Cable Television reception station	X	X	X	X	X	X	X	X	X
Water supply reservoir and irrigation canal	X	X	X	X	X	X	X	X	
A group living facility, other than homes for social rehabilitation, or a home where up to 6 unrelated individuals are living together, that is occupied by more than one registered sex offender.	X	X	X	X	X	X	X	X	X
Group, foster or communal home, residential treatment center, community residential home, home for social rehabilitation, assisted living residence, personal case boarding home, specialized group facility, receiving home for more than 4 foster home residents, residential child care facility or shelter from domestic violence, licensed or certified by state if applicable, in which 7 or more residents who are not legally related live and cook together as a single housekeeper unit not located within 750 ft of another similar type home or shelter.	X	X	X	X	X	X	X	X	X

Use	R-1	RR	R-1A	R-1B	R-1C	R-2	R-3	R-3A	R-4
Group home for the aged, group home for the developmentally disabled, group home for the mentally ill persons, licensed or certified by the state if Group home for the aged, group home for the developmentally disabled, group home for the mentally ill persons, licensed or certified by the state if applicable, in which 9 or more residents who are not legally related live and cook together as a single housekeeper unit, where such home is not located within 750 ft of another similar type home, licensed or certified by the state if applicable.	X		X	X	X	X	X	X	X
State licensed daycare center or preschool or nursery	X	X	X	X	X	X			
Parochial or private schools. Not included are private vocational, trade or professional schools, schools of art, music or dance and schools for subnormal or mentally disturbed adults. Exceptions listed above shall not preclude home occupations authorized by the Board of Adjustment or the Home Occupations Section of this Zoning Resolution.	X	X	X	X	X	X			
Home for social rehabilitation or adjustment for up to 10 residents plus staff, not located within 750 ft. of another similar facility.							X		
Oil and gas drilling and production subject to the Drilling and Production of Oil and Gas Section of this Zoning Resolution, except where located within a subdivision platted and recorded in the records of the Clerk and Recorder.	X	X	X	X		X	X	X	X
Class I or II commercial recreational facility. Class II public recreational facility.	X	X	X	X		X	X	X	X

E. Lot and Building Standards (orig. 3-26-13; am. 7-17-18; am. 5-10-22)

Districts	Front Setback		
	Primary Structure/ Garages (attached or detached)	Adjacent to Arterial	All Other Accessory Structures
R-1	20 ft.	30 ft.	Housing Livestock – 100 ft. All Other Accessory Structure – 50 ft.
R-1A	20 ft.	30 ft.	50 ft.
R-1B	20 ft.	30 ft.	50 ft.
R-1C	12 ft. (living space) 20 ft. (garage)	18 ft. (living space) 30 ft. (garage)	30 ft.
R-2	20 ft.	30 ft.	20 ft.

Districts	Front Setback		
	Primary Structure/ Garages (attached or detached)	Adjacent to Arterial	All Other Accessory Structures
R-3	20 ft.	30 ft.	50 ft.
R-3A	20 ft.	30 ft.	50 ft.
R-4	40 ft.	40 ft.	40 ft.
RR-1/4	20 ft.	20 ft.	20 ft.
RR-1/2	30 ft.	30 ft.	30 ft.
RR-1	30 ft.	30 ft.	30 ft.
RR-2	30 ft.	30 ft.	30 ft.
RR-5	50 ft.	50 ft.	50 ft.
RR-10	75 ft.	75 ft.	75 ft.

Districts	Side Setback[1]		
	All Structures	Adjacent to local/collector	Adjacent to arterial
R-1	5 ft. min (15 ft. total)[2] Housing Livestock – 15 ft.	20 ft.	30 ft
R-1A	5 ft. min (15 ft. total)[2]	20 ft.	30 ft.
R-1B	5 ft.	20 ft.	30 ft.
R-1C	5 ft.	15 ft.	20 ft.
R-2	5 ft. min (15 ft. total)[2]	20 ft.	30 ft.
R-3	5 ft. [3]	20 ft	30 ft.
R-3A	5 ft. [3]	20 ft.	30 ft.
R-4	30 ft.	30 ft.	30ft.
RR-1/4	10 ft.	20 ft.	20 ft.
RR-1/2	20 ft.	30 ft.	30 ft.
RR-1	30 ft.	30 ft.	30 ft.
RR-2	30 ft.	30 ft.	30 ft.
RR-5	50 ft.	50 ft.	50 ft.
RR-10	50 ft.	75 ft.	75 ft.

[1]For a two-family dwelling, no side setback shall be required where there is a common wall shared between buildings on adjacent lots.

[2] Each side setback must be a minimum of 5 feet, and both side setbacks added together must equal 15 feet or more.

[3] The minimum side setback for a single-family dwelling, two-family dwelling, duplex, townhome, or multi- family dwelling with 1 story, shall be 5 feet on each side. The minimum side setback for any other main building shall be 10 feet on each side.

Districts	Rear Setback					
	Single-Family	Two-Family or Duplex	Townhome	Multi-Family	Other Main Building	Detached Garage or Other Accessory Structure
R-1	5 ft.	n/a	n/a	n/a	5 ft.	5 ft.
R-1A	10 ft.	n/a	n/a	n/a	10 ft.	5 ft.
R-1B	10 ft.	n/a	n/a	n/a	10 ft.	5 ft.
R-1C	10 ft.	n/a	n/a	n/a	10 ft.	5 ft.
R-2	5 ft.	5 ft.	n/a	n/a	5 ft.	5 ft.
R-3	5 ft.	5 ft.	10 ft	10 ft.	10 ft.	5 ft.
R-3A	10 ft.	10 ft.	10 ft.	10 ft.	10 ft.	10 ft.
R-4	n/a	n/a	n/a	30 ft.	30 ft.	30 ft.
RR-1/4	20 ft	n/a	n/a	n/a	20 ft	20 ft
RR-1/2	20 ft.	n/a	n/a	n/a	20 ft.	20 ft.
RR-1	20 ft.	n/a	n/a	n/a	20 ft.	20 ft.
RR-2	30 ft.	n/a	n/a	n/a	30 ft.	30 ft.
RR-5	50 ft.	n/a	n/a	n/a	50 ft.	50 ft.
RR-10	50 ft.	n/a	n/a	n/a	50 ft.	50 ft.

Districts	Building Separation		Building Height		
	Between Townhome or Multi-family Groups	From Building on Adjacent Lot	Primary Structure	Multi-Family Structure	All Other Accessory Structure[1]
R-1	n/a	n/a	35 ft.	n/a	25 ft.
R-1A	n/a	15 ft.	35 ft.	n/a	25 ft.
R-1B	n/a	n/a	35 ft.	n/a	25 ft.
R-1C	n/a	n/a	30 ft.	n/a	25 ft.
R-2	n/a	15 ft.	35 ft.	n/a	25 ft.
R-3	25 ft.	n/a	35 ft.	45 ft.	25 ft.
R-3A	25 ft.	n/a	35 ft.	45 ft.	25 ft.
R-4	30 ft. [2]	n/a	80 ft.	80 ft.	25 ft.
RR-1/4	n/a	n/a	35 ft.	n/a	25 ft.
RR-1/2	n/a	n/a	35ft	n/a	25 ft.
RR-1	n/a	n/a	35 ft.	n/a	25 ft.
RR-2	n/a	n/a	35 ft.	n/a	25 ft.
RR-5	n/a	n/a	35 ft.	n/a	25 ft.
RR-10	n/a	n/a	35 ft.	n/a	25 ft.

[1] No such building shall exceed the lesser of the height indicated or the height of the primary structure.

Districts	Lot Size				
	Single-Family Dwelling	Two-Family Dwelling	Duplex	Townhome	Multi-Family
R-1	12,500 s.f.	n/a	n/a	n/a	n/a
R-1A	9,000 s.f.	n/a	n/a	n/a	n/a
R-1B	7,500 s.f.	n/a	n/a	n/a	n/a
R-1C	4,500 s.f.	n/a	n/a	n/a	n/a
R-2	9,000 s.f.	12,500 s.f. min. develop area and 5,000 s.f. min lot area per unit	12,500 s.f.	n/a	n/a

Districts	Lot Size				
	Single-Family Dwelling	Two-Family Dwelling	Duplex	Townhome	Multi-Family
R-3	7,500 s.f.	3,000 s.f. min. develop area and 1,500 s.f. min lot area per unit	9,000 s.f.	12,500 s.f. min. develop area and 2,000 s.f. min lot area per unit	12,500 s.f. min. develop area and 2,000 s.f. min lot area per unit
R-3A	n/a	4,000 s.f. min. develop area and 2,000 s.f. Min lot area per unit	12,500 s.f.	4,000 s.f. min. develop area and 2,000 s.f. Min lot area per unit	12,500 s.f. min. develop area and 3,000 s.f. min lot area per unit
R-4	n/a	n/a	n/a	n/a	1 acre min develop area and 850 s.f. Min lot area per unit
RR-1/4	¼ acre (10,890 s.f.)	n/a	n/a	n/a	n/a
RR-1/2	½ acre (27,180 s.f.)	n/a	n/a	n/a	n/a
RR-1	1 acre (43,560 s.f.)	n/a	n/a	n/a	n/a
RR-2	2 acres (87,120 s.f.)	n/a	n/a	n/a	n/a
RR-5	5 acres (217,800 s.f.)	n/a	n/a	n/a	n/a
RR-10	10 acres (435,600 s.f.)	n/a	n/a	n/a	n/a

F. Fences

1. Maximum fence height: 6 feet. (orig. 3-26-13)
2. No fence more than 42 inches in height of any type shall be permitted within the front setback line and the front lot line. (orig. 3-26-13)
3. No barbed wired or electric fence shall be permitted in this zone district. (orig. 3-26-13)
4. On adjacent lots where allowed fence heights differ, the lower height restriction shall govern. (orig. 3-26-13)

G. General Requirements

1. Corner lots must comply with the vision clearance triangle requirements. (orig. 3-26-13; am.7-17-18)
2. No structure may be erected, placed upon or extend over any easement unless approved in writing by the agency or agencies having jurisdiction over such easement. (orig. 3-26-13)

H. Animals

1. Manure shall not be allowed to accumulate so as to cause a hazard to the health, safety or welfare of humans and/or animals. The outside storage of manure in piles shall not be permitted within 100 feet of the front lot line and shall conform to the side and rear setback requirements of a dwelling. (orig. 3-26-13)
2. Stallions and bulls shall be kept in a pen, corral or run area enclosed by a 6-foot chain link fence, or material equal or greater in strength, except when it is necessary to remove them for training, breeding or other similar purposes. (orig. 3-26-13)
3. Where allowed the keeping of horses, cattle, sheep, goats, or other similar domesticated animals shall be kept in a fenced area. The total number of animals, listed above, is limited as follows. (orig. 3-26-13)

The minimum square footage of open lot area available to the animals, shall be 9,000 square feet for the first animal and 6,000 square feet for each additional animal. The total number of such animals that may be kept shall not exceed 4 per 1 acre; except that offspring of animals on the property may be kept until weaned. (orig. 3-26-13; am. 7-17-18)

CASE SUMMARY

JEFFERSON COUNTY COLORADO
Planning and Zoning

100 Jefferson County Parkway,
Suite 3550, Golden, CO 80419
(303) 271-8700 | planning.jeffco.us

CASE SUMMARY

Regular Agenda

PC HEARING DATE: May 14, 2025

BCC HEARING DATE: June 10, 2025

22-122945AM Regulation Amendments

CASE NAME: Regulation Amendments pertaining to Transportation and Access Standards

APPLICANT: Jefferson County

PURPOSE: **To amend Transportation and Access Standards pertaining to the:**

- **Transportation Design and Construction Manual**
- **Zoning Resolution Section 2 – General Provisions and Regulations**
- **Zoning Resolution Section 16 – Land Disturbance**
- **Land Development Regulation Section 15 – Circulation**
- **Storm Drainage Design and Technical Criteria – Chapter 10**

CASE MANAGER: Lindsey Wire, Engineering Supervisor

Applicant Team Presenters:
Lindsey Wire, Engineering Supervisor, lwire@jeffco.us, 303.271.8717
Nathan Seymour, Civil Planning Engineer, nseymour@jeffco.us, 303.271.8751
Christina Lane, Traffic Section Manager, clane@jeffco.us, 303.271.8473

Issues:

- None

Recommendations:

- **Staff:** Recommends approval.
- **Planning Commission:** Recommends approval.

Interested Parties:

- Conifer and South Evergreen Community Committee

Level of Community Interest: Low

Case Manager Information: Phone: 303-271-8717 e-mail: lwire@jeffco.us

PLANNING COMMISSION RESOLUTION

It was moved by Commissioner **Messner** that the following Resolution be adopted:

BEFORE THE PLANNING COMMISSION
COUNTY OF JEFFERSON
STATE OF COLORADO

May 14, 2025

RESOLUTION

22-122945AM	Regulation Amendments
Case Name:	Regulation Amendments pertaining to Transportation and Access Standards
Applicant:	Jefferson County
Purpose:	**To amend Transportation and Access Standards pertaining to the:** • **Transportation Design and Construction Manual** • **Zoning Resolution Section 2 – General Provisions and Regulations** • **Zoning Resolution Section 16 – Land Disturbance** • **Land Development Regulation Section 15 – Circulation** • **Storm Drainage Design and Technical Criteria – Chapter 10**
Case Manager:	Lindsey Wire

The Jefferson County Planning Commission hereby recommends **APPROVAL**, of the above application, on the basis of the following facts:

1. That the factors upon which this decision is based include evidence and testimony and staff findings presented in this case.

2. The Planning Commission finds that:
   A. The amendments to the regulations will establish clear, concise, and comprehensive documents that meet the needs of our community today.
   B. The amendments to the regulations ensure consistency with current County regulations, state statutes, and applicable federal

standards.

C. The amendments are in the best interest of the health, safety, and general welfare of the residents of Jefferson County.

Commissioner **Spencer** seconded the adoption of the foregoing Resolution, and upon a vote of the Planning Commission as follows:

Commissioner	**Rogers**	**aye**
Commissioner	**Spencer**	**aye**
Commissioner	**Becker**	**aye**
Commissioner	**Bolin**	**aye**
Commissioner	**Liles**	**aye**
Commissioner	**Messner**	**aye**
Commissioner	**LaRocque**	**aye**

The Resolution was adopted by **unanimous** vote of the Planning Commission of the County of Jefferson, State of Colorado.

I, Kimi Schillinger, Executive Secretary for the Jefferson County Planning Commission, do hereby certify that the foregoing is a true copy of a Resolution duly adopted by the Jefferson County Planning Commission at a regular hearing held in Jefferson County, Colorado, May 14, 2025.

Kimi Schillinger
Executive Secretary

STAFF REPORT

JEFFERSON COUNTY COLORADO
Planning and Zoning

100 Jefferson County Parkway,
Suite 3550, Golden, CO 80419
(303) 271-8700 | planning.jeffco.us

STAFF REPORT

PC HEARING DATE: May 14, 2025

BCC HEARING DATE: June 10, 2025

22-122945AM Regulation Amendment

CASE NAME: Regulation Amendments pertaining to Transportation and Access Standards

APPLICANT: Jefferson County

LOCATION: Unincorporated Jefferson County

PURPOSE: **To amend Transportation and Access Standards pertaining to the:**

- **Transportation Design and Construction Manual**
- **Zoning Resolution Section 2 – General Provisions and Regulations**
- **Zoning Resolution Section 16 – Land Disturbance**
- **Land Development Regulation Section 15 – Circulation**
- **Storm Drainage Design and Technical Criteria – Chapter 10 (Streets/Roads)**

CASE MANAGER: Lindsey Wire, Engineering Supervisor

BACKGROUND:

Jefferson County Planning & Zoning is processing a Regulation Amendment (22-122945AM) pertaining to transportation and access standards of the Transportation Design and Construction Manual (TDCM), Zoning Resolution (ZR) Section 2 (General Provisions and Regulations) and Section 16 (Land Disturbance), Land Development Regulation (LDR) Section 15 (Circulation) and the Storm Drainage Design and Technical Criteria (SDD&TC) Chapter 10.

The proposed revisions are technical in nature and are necessary to provide clarity and align County requirements with industry standards. A major component of these proposed amendments is to remove the statement that the appropriate Fire Protection District may approve certain alternate standards. These updates define the process for how an applicant may request relief through the County from certain requirements previously approved by a Fire Protection District. If adopted, they will be carried forward and incorporated into the Unified Land Use Code (ULUC), as appropriate.

During the three referral periods, Staff received comments regarding the proposed changes to the regulations.

All the comments received during the referral periods have been incorporated into the Comment and Response Log attached to this Staff Report. Additionally, Staff reviewed the proposed regulation with the Regulation Advisory Panel (RAP) comprised of representatives from the following groups: Homeowner's Associations, Citizens, Land Use/Development Consultants, Business Owners/Real Estate Brokers, Engineers/Planners, Attorneys, Developers, and Special Districts. The RAP held two meetings to discuss the proposed amendments and were provided a referral.

These regulations have been through multiple referrals in order to best incorporate the comments received by citizens and agencies. Staff and the RAP are comfortable moving forward with the proposed regulatory amendments.

SUMMARY OF PROPOSED AMENDMENTS:

The proposed amendments primarily encompass four parts of the County Regulations:
1) Transportation Design and Construction Manual (TDCM); 2) Zoning Resolution (ZR); 3) Land Development Regulation (LDR); and 4) Storm Drainage Design and Technical Criteria (SDD&TC). The details of each are described below.

1. Transportation Design and Construction Manual:
    a. Chapter 3: Design and Technical Criteria
        i. Update Standard Templates for Streets/Roads
        ii. Align County requirements with the AASHTO Policy on Geometric Design of Highways & Streets.
        iii. Update Section 3.7.1 to clarify intersection spacing requirements.
        iv. Update Section 3.7.2 to provide additional clarity on Vision Clearance Triangle and Site Distance requirements.
        v. Update Section 3.7.8 to:
            1. Remove the statement that the appropriate Fire Protection District may approve alternate standards.
            2. Define a new process for requesting relief of the requirements within this section, which must be approved by the County.
            3. Allow up to 15% grade for driveways and private roads provided specific requirements are met.
            4. Define minimum distance from a structure for a hammerhead turnaround.
            5. Define loading requirements for bridges and other structures.
            6. Clarify that the rules and regulations of the applicable Fire Protection District shall govern.
        vi. Update Section 3.10 to add a reference to Colorado Department of Transportation criteria
    b. Chapter 4: Pavement Design and Technical Criteria

        i. Update Section 4.2 to clarify that edge drains are required with the Construction Plans and may be omitted if final pavement design shows they are not necessary.
        ii. Add Section 4.6.3.2 to specify when Stone Mastic Asphalt is required.
    c. Chapter 5: Construction Specifications and Standards
        i. Update Construction Specifications and Standards to meet industry standards.
    d. Transportation Studies Appendix:
        i. Relocate to Chapter 6 of the TDCM.
        ii. Create four types: Trip Generation Memoranda, Transportation Analysis, Transportation Impact Studies, and Letter of Conformance with an Approved TIS.
        iii. For each type, provide an example template.
    e. Definitions:
        i. Add a definition for All Weather Travel Surface
        ii. Add definition for Dip of Natural Terrain
        iii. Add definition for Sidewalk
        iv. Add definition for Vulnerable Roadway User

2. Zoning Resolution:
    a. Section 2 (General Provisions and Regulations)
        i. Update Section 2.D.1.j.(4), to clarify how the physical standard of access will be evaluated for different Building Permit types (i.e., habitable vs non-habitable structures and additions).
    b. Section 16 (Land Disturbance)
        i. Clarify that land disturbance activities with or in advance of a building permit, with less than 0.5 acres of land disturbance where the applicant is requesting relief of a regulatory requirement requires a Grading Permit.
        ii. Add the requirement that land disturbance associated with access to detached living space where either the access does not exist or has not previously been approved as access to living space requires a Notice of Intent Permit.
        iii. Update the Notice of Intent process to allow modifications to previously accepted plans that do not conform to the Jefferson County Standards and Regulations for land disturbance permits to be processed as an Administrative Review rather than a Grading Permit.

3. Land Development Regulation:
    a. Section 15 (Circulation):
        i. Clarify that adjoining street improvements are required for all Arterial Streets/Roads.
        ii. Remove the statement that the appropriate Fire Protection District may approve alternate standards for cul-de-sacs and clarify that any relief would be processed by Planning and Zoning.

4. Storm Drainage Design and Technical Criteria:
    a. Chapter 10: Streets/Roads

i. Remove the statement that the appropriate Fire Protection District may approve alternate standards for overtopping depth for the 100-year storm event that exceeds 12" and clarify that any relief would be processed by Planning and Zoning.

HEARING PACKET DOCUMENTS:

- Red-Marked copy of the Transportation Design and Construction Manual, Sections 2 and 16 of the Zoning Resolution, Section 15 of the Land Development Regulation and the Storm Drainage Design and Technical Criteria. Additions are in blue, deletions are in red, and moves are in green.
- A clean copy (changes accepted) of the Transportation Design and Construction Manual, Sections 2 and 16 of the Zoning Resolution, Section 15 of the Land Development Regulation and the Storm Drainage Design and Technical Criteria.
- Comment and Response Log
- Referral list

REFERRAL PERIOD/PUBLIC NOTIFICATION AND OUTREACH:

Notice of the proposed Amendments to the Transportation Design and Construction Manual, Storm Drainage Design and Technical Criteria, Zoning Resolution and the Land Development Regulation was provided when the case went out on referral and when the public hearings were scheduled.

There were three referral periods for this case. A formal draft of the proposed Amendments was sent to each applicable referral agency and organization registered with the County. This includes County departments and divisions, external agencies, neighboring local governments, registered HOA and Umbrella Groups, and the Regulation Advisory Panel (RAP) which is a panel of HOA representatives, citizens, land use/development consultants, business owners/real estate brokers, engineers/planners, attorneys, developers, and special districts. Please see the referral list for more information. All comments received have been incorporated into the Comment and Response Log associated with this Staff Report.

Additional citizen outreach was provided in the following ways:

- Direct email notification to all agencies, jurisdictions, community groups and citizens that may have a specific interest in these regulations.
- Email and/or text message to the Notify Me list serve for individuals interested in Regulation Updates.
- Meetings with the Regulation Advisory Panel (RAP).

The majority of the comments were submitted by citizens, community groups, other agencies/jurisdictions and engineering consultants. The following referral agencies had no comments or concerns: Arapahoe County, Jefferson County Building Safety, Jefferson County Planning Engineering, Jefferson County Public Health, Jefferson County Transportation and Engineering, South Metro Fire Rescue, City of Golden, Division of Water Resources, Douglas County, RTD, Bear Creek Water and Sanitation, and CORE.

The following summarizes comments received during the referrals. A full list of the questions and responses can be found in the comment response log:

- Cities and Counties: Staff received comments from both **Adams and Broomfield Counties** during the 1st referral. The comments from Adams County pertained to Municipal Separate Storm Sewer requirements as well as infiltration testing. These comments did not apply to these regulations, however they were incorporated into a separate update that was previously processed and approved. The comments from Broomfield included questions for the County regarding existing and proposed standards such as speed limits, Vision Clearance, Site Distance, Signal Warrants, and Driveway Spacing. Broomfield also provided questions regarding the new Trip Generation Memorandum and Transportation Analysis. A response to each question can be found in the 1st Referral Comment/Response Log.
- **Conifer and South Evergreen Community Committee (COSECC)**: Staff received comments from COSECC pertaining to the updated standards within Chapter 3 of the Transportation Design and Construction Manual and the updates to Transportation Studies Appendix. Comments were provided during both the 1st and 2nd referrals of these regulation amendments. Staff responded following the 1st referral that we would work directly with the Fire Protection Districts to further define the standards for private streets/roads within Chapter 3. Staff also provided clarifying comments regarding the Transportation Studies section. Following the 2nd Referral, Staff received similar comments and in addition to comment responses, set up a meeting with the commentor, County Staff, Elk Creek Fire and Evergreen Fire to discuss the comments in further detail. Following the 3rd Referral, Staff received comments to the Transportation Studies Appendix only which were similar to those received during the 1st and 2nd Referrals. The comments indicated that the document was greatly improved from the original review and expressed the hope that Staff would continue to update this regulation over time as advancements are made in the Transportation field. Staff responded that future updates would be considered as necessary to meet industry standards.
- Fire Protection Districts (Districts): Staff received comments from **Elk Creek Fire, Evergreen Fire and Foothills Fire** during the 1st referral for these proposed amendments. The Districts provided general support for the proposed amendments with comments pertaining to turnaround standards, fire sprinkler system standards, building code references and the proposed relief process. Following the referral, Staff worked directly with the Districts to address these comments. **Evergreen Fire** provided follow up comments during the 2nd referral pertaining to private street/road grades and the private driveway template. Staff responded by updating the document to provide clarity. **Arvada Fire** provided comments during the 2nd referral pertaining to the standards of their District being more strict than the requirements of the County. Staff responded that this update allows the requirements of the applicable Fire Protection District to govern, if the same County requirement is less strict. No additional comments were provided from any of the Districts during the 3rd Referral.
- **Colorado Department of Transportation**: Staff received comments from the Colorado Department of Transportation during the 1st referral of these proposed amendments. The comments included questions regarding how the County determines when to require a road versus a street template and recommendations regarding utility construction in right-of-way. Staff responded that the County's roadway templates are meant to be utilized in conjunction with the County's Major Thoroughfare Plan (MTP). No additional comments

were provided during the subsequent referrals.

- **Jefferson County Horse Council**: The Jefferson County Horse Council provided comments during the 2nd referral for these proposed amendments. These comments pertained to access requirements for equestrian centers, safety concerns relating to vehicle/equestrian conflicts, and general access standards for equestrians. Staff updated the document to include a definition for vulnerable roadway users as those roadway users that are not protected by a vehicle or other shield while on a roadway and is at a greater risk for involvement in a serious injury or fatal crash. Said vulnerable roadway users were added to the Transportation Studies section of the TDCM for consideration of conflict points. In addition, in areas where equestrian use is high, staff will coordinate with the equestrian community to implement treatments in line with the Manual on Uniform Traffic Control Devices.
- Internal Referral Responses: During the 1st referral, Staff received internal comments from the **County Geologist and Jeffco Planning**. The County Geologist requested clarification that pavement design should include private and non-County maintained roads. During the 2nd referral **Jefferson County Open Space** provided general formatting comments and Road and Bridge requested the expansion or addition of language to Section 5.1.8.1 to include tracer wires to curb drains. Comments were addressed for all internal referral agencies and no further comments were provided.
- **Wildland Urban Interface Recommendations**: Concurrent to the processing of this case, Staff received recommendations from the Community Wildfire Planning Center. While this document was associated with a separate project, it included recommendations for the Transportation Design and Construction Manual pertaining to driveway and private street/road standards. Many of these recommendations were incorporated into the TDCM update; however, Staff did determine that some were outside the scope of these updates and would be better incorporated into the overall ULUC process.
- **Planning Commission**: A Planning Commission member provided comments during the 2nd referral of this project. The comments pertained to driveway and private street/road standards as well as sprinkler requirements for building permits. Staff responded that the proposed regulations were prepared in coordination with the Fire Protection Districts and that sprinkler requirements would apply to new start building permits or new habitable structures, not all building permits. In addition to comment responses, Staff set up a meeting with the commentor, County Staff, Elk Creek Fire and Evergreen Fire to discuss the comments in further detail. No additional comments were received during the 3rd Referral.
- **Ken Caryl Ranch**: During the 3rd referral, Ken-Caryl Ranch provided comments requesting that their specific street sign types be included in the County regulations. Staff responded that any metro district that presents custom neighborhood street signs to the County goes through a review process to ensure MUTCD compliance. Once they get County approval, a license agreement is entered into for the Meto District to maintain the signs.
- **Citizen Comments**: Staff received several citizen comments over the course of these regulation amendments. During the 1st referral, Staff received comments from a citizen stating that relief of the Standards within the Transportation Design and Construction Manual should not be allowed. Staff responded that there are instances where an existing standard within the County Regulations cannot be met, and it is necessary for an applicant to request relief. The relief requests may be approved if the applicant can demonstrate that alternate solutions or designs will not be detrimental to or contrary to the purpose of the regulation, and will be in harmony with the general purpose and intent of the provision

for which a waiver is sought, and that strict compliance with such provision would be impossible or impractical. Additional comments were provided from this citizen that pertained to a specific case. During the 2nd referral a citizen reached out to determine if these updates were a part of their outreach to CDOT and City of Lakewood for a crosswalk, light and turning lane into the Red Rocks Ranch development. Staff responded that this was a separate project. No further comments were provided from either citizen.

Staff has addressed all comments in the Comment and Response Log.

PLANNING COMMISSION:

Planning Commission Recommendation (Resolution dated May 14, 2025 attached):

Approval	
Approval with Conditions	X (7-0)
Denial	

The case was scheduled on the regular agenda of the Planning Commission hearing. There was one citizen who provided public testimony. Comments and questions during public testimony were regarding the Fire Protection District involvement in the new relief process for private streets/roads and driveways, fire sprinkler requirements during relief, the removal of the reference to the International Fire Code, the Administrative Review process, and the updated Horizontal Curve radius table not meeting the American Association of State Highway and Transportation Officials (AASHTO) requirements.

Regarding relief, Staff's response confirmed that while the Fire Protection Districts would no longer be approving alternative standards for private streets/roads and driveways, the Districts would be a referral agency on any relief requests with their input contributing to Staff's recommendation to the Director of Planning and Zoning. Staff also explained that Fire Sprinkler installation was included as a requirement for any relief requests since it would provide additional time for evacuation in the event of a fire as well as additional time for the applicable Fire District to respond. Regarding the International Fire Code, the reference still remains, however Staff removed the specific reference to the "2018" code and instead named the "applicable" Internation Fire Code in the document to avoid the need for future updates.

Regarding the Administrative Review process, Staff explained that currently, if changes occur during construction following the Notice of Intent land disturbance permit process that would warrant Staff review, a full Grading Permit is required. By instead requiring the Administrative Review process, Staff is still able to review the changes and send the documents on referral as necessary, while undergoing a more streamlined process for the applicant.

Regarding AASHTO standards, the Planning Commission asked Staff to review AASHTO standards for the Horizontal Curve radii. Based on this review, Staff has updated Chapter 3 to align with the Policy on Geometric Design of Highways & Streets.

The Planning Commission had comments regarding sign post bases to make sure that "or equivalent" is added following TELESPAR ® throughout the document. Staff responded that these changes would

be made, and after reviewing the text, “or equivalent” was added in two locations. After Staff responses, the Planning Commission recommended approval.

FINDINGS/RECOMMENDATIONS:

Staff recommends that the Board of County Commissioners find that:

1. **The amendments to the regulations will establish clear, concise, and comprehensive documents that meet the needs of our community today.**

2. **The amendments to the regulations ensure consistency with current County regulations, state statutes, and applicable federal standards.**

3. **The amendments are in the best interest of the health, safety, and general welfare of the residents of Jefferson County.**

And;

Staff recommends that the Board of County Commissioners approve Case No. 22-122945AM.

And;

Staff further recommends that Planning and Zoning Division be given the authority to revise the Transportation Design and Construction Manual, Land Development Regulation, Zoning Resolution, and Storm Drainage Design and Technical Criteria for the limited purposes of formatting the Regulations and correcting any typographical errors and any other non-substantive changes to the Regulations that Staff deems necessary prior to final publication of the Regulations.

COMMENTS PREPARED BY:

Lindsey Wire

Lindsey Wire
Engineering Supervisor
June 3, 2025

NOTIFICATION SUMMARY

JEFFERSON COUNTY COLORADO
Planning and Zoning

Planning and Zoning
100 Jefferson County Parkway
Ste. 3550
Golden, CO 80419
303.271.8700 | jeffco.us
pzweb@jeffco.us

November 2, 2022

Dear Agency/Interested Party,

Jefferson County Planning & Zoning is proposing a Regulation Amendment process pertaining to the Transportation Design and Construction Manual. This regulation update includes updates to Chapters 3 and 5 as well as updates to the Transportation Studies Appendix, Standard Details, and Templates.

Red-marked drafts can be found in both Word and Adobe PDF formats on our Regulation Revision website and in the case folder (22-122945AM) here.

We are very interested in any comments or concerns that you or your agency may have with these proposed changes. If you have any questions, please contact Planning and Zoning Regulation Revisions at PZRegRev@jeffco.us.

Comments are due Wednesday November 23, 2022.

Sincerely,

Planning and Zoning Staff

Cities

DRT@littletongov.org;TownPlanner@columbinevalley.org;bowmartown@gmail.com;brenda@lakesideamusementpark.com;collinsb@bouldercolorado.gov;ashleym@bouldercolorado.gov;developmentservices@denvergov.org;brad.eckert@denvergov.org;jmcconne@cityofwestminster.us;jschartz@edgewaterco.com;kara@morrisonco.us;carrie@mccooldevelopment.com;lritchie@louisvilleco.gov;mgreer@tomv.org;pauric@lakewood.org;aarsch@lakewood.org;planner@bouldercounty.org;pfogg@bouldercounty.org;planning@cityofgolden.net;planningapps@broomfield.org;rsmetana@arvada.org;stevenw@superiorcolorado.gov;wcharles@englewoodco.gov;zoning@ci.wheatridge.co.us;

External Referral Contacts

CGS_LUR@mines.edu;Emma.Brokl@colostate.edu;emma.brokl@colostate.edu;Kent.J.Christiansen@usps.gov;krissy.j.summerfield@usps.gov;Jason.g.Eddleman@usps.gov;admin@evergreenchamber.org;afeinstein@jcha.org;asummers@drcog.org;blake.angelo@colostate.edu;brad.eckert@denvergov.org;bradley.Sheehan@state.co.us;richard.solomon@state.co.us;bradley.sheehan@state.co.us;richard.solomon@state.co.us;ccufre@coloradoopenlands.org;cdattel@mines.edu;cdphe_localreferral@state.co.us;
todd.leopold@state.co.us;coloradoes@fws.gov;director@goconifer.com;engineering@rtd-denver.com;greg.ochis@state.co.us;inquiries@nist.gov;jbeck@blm.gov;jcd@jeffersoncd.com;jpphaadmin@gmail.com;ken.mushinski@cotterusa.com;kiel.g.downing@usace.army.mil;lisa.heagley@usda.gov;nathanael.berry@usda.gov;lseeger@jeffcoedc.org;margaret.vigil@state.co.us;mark.lamb@state.co.us;matt.martinez@state.co.us;oahp@state.co.us;sarah.brucker@state.co.us;joanna.williams@state.co.us;submittals@udfcd.org;tim_connors@nps.gov;heather_eggleston@nps.gov;Linda_Moery@nps.gov;treed@jeffco.k12.co.us;rhuxley@jeffco.k12.co.us;Matthew.Hanks@jeffco.k12.co.us;wrb@urbanfrontier.com;

Internal Rare

adoran@jeffco.us;cmarkel@co.jefferson.co.us;kcisowsk@jeffco.us;dbeauvai@co.jefferson.co.us;dconway@jeffco.us;esander@jeffco.us;kdouglas@jeffco.us;hgutherl@jeffco.us;hrgrieb@jeffco.us;kwshephard@jeffco.us;elroberts@jeffco.us;jshrader@jeffco.us;kstewart@co.jefferson.co.us;mdanner@jeffco.us;apanza@jeffco.us;mschuste@jeffco.us;rklopf@jeffco.us;rbishop@flyrmma.com;bmiller@flyrmma.com;panslow@co.jefferson.co.us;rtemmer@q.com;sswain@jeffco.us;steve.chestnut@jeffcolibrary.org;tkauffma@jeffco.us;pweber@jeffco.us;

Internal Referral Contacts

arohwer@jeffco.us;srowe@jeffco.us;kdean@jeffco.us;mharalds@jeffco.us;jpvigil@co.jefferson.co.us;mdamjano@co.jefferson.co.us;kperea@co.jefferson.co.us;mweiden@co.jefferson.co.us;mbaldwin@co.jefferson.co.us;bhasten@jeffco.us;fselvosk@co.jefferson.co.us;kbryson@jeffco.us;hgutherl@jeffco.us;khagaman@jeffco.us;kjordan@co.jefferson.co.us;ltownsen@co.jefferson.co.us;mvanatta@co.jefferson.co.us;rfox@co.jefferson.co.us;mschuste@jeffco.us;rklopf@jeffco.us;nyork@jeffco.us;estoner@co.jefferson.co.us;poconnel@jeffco.us;publichealthehlanduse@jeffco.us;tjones@jeffco.us;rkirkega@jeffco.us;

Irrigation Companies

eve@farmersres.com;fhl.gm.mike@gmail.com;generalmanager@churchditch.org;jerry.foster@denverwater.org;jim.ferentchak@wwwheeler.com;johnreiber@msn.com;liddy.armijo@molsoncoors.com;mike.

wright@archden.org;minifarm2@aol.com;neal.santangelo@molsoncoors.com;scot.hatcher@molsoncoors.com;peter.adrc@gmail.com;ssarrow@pinehurstcountryclub.com;theander@mseapc.com;

Metro Districts

management@fhmd.net;abeckman@sdmsi.com;traciw@kcranch.org;gmcgowan9052@aol.com;dolphindance1@aol.com;Lisa.johnson@claconnect.com;Jill.Neufer@cliftonlarsonallen.com;SALLEN@WBAPC.COM;abeckman@sdmsi.com;afinn@sdmsi.com;afrisbie@wbapc.com;angela@teleos-services.com;anna.jones@claconnect.com;barnett@timberlinedc.com;levy@timberlinedc.com;cmamlmgren@pleasantviewmetro.com;twaller@pleasantviewmetro.org;cnoon@crsofcolorado.com;cschauder@evergreenmetrodistrict.com;dave@peakdistrictmanagementllc.com;cindy.jenkins@cliftonlarsonallen.com;dchenoweth@evergreenmetro.org;zloftis@evergreenmetro.org;jstawski@evergreenmetro.org;dolphindance1@aol.com;eeds@gginb.com;ewhite@highlandsranch.org;firm@wbapc.com;jhenry@specialdistrictlaw.com;jtanaka@wbapc.com;kseter@svwpc.com;ljacoby@sdmsi.com;ljohnson@sdmsi.com;mbecher@specialdistrictlaw.com;mmcgeady@mcgeadysisneros.com;mmruphy@wbapc.com;nicholas.carlson@claconnect.com;anna.jones@claconnect.com;andrew.williams@claconnect.com;office@meadowbrookwaterdistrict.com;rkron@spencerfane.com;sblair@crsofcolorado.com;tgeorge@spencerfane.com;wendi.klein@claconnect.com;

Park and Rec Districts

Brad.eckert@denvergov.org;David.Peak@cliftonlarsonallen.com;PlanningSupport@ssprd.org;RosWil@lakewood.org;johpal@lakewood.org;ablackmore@prospectdistrict.org;mhanson@prospectdistrict.org;brett@ckrd.org;insley@fhprd.org;seank@fhprd.org;richeller@fhprd.org;jmanwaring@ci.wheatridge.co.us;kwsargent@msn.com;mtableman@co.clear-creek.co.us;ncooper@eprd.co;cvanderveen@eprd.co;nemrdpool@gmail.com;nikki.mccabe@denvergov.org;Nikki.VanRavenswaay@DenverGov.org;pamartinez@edgewaterco.com;rheanar@apexprd.org;stecar@lakewood.org;biljew@lakewood.org;tom@beaverranch.org;traciw@kcranch.org;weecreekers@gmail.com;

Regulation Notifications

Brennanjr@aol.com;Jenslines@gmail.com;John@Hermanussen.net;MarkBenallo@aol.com;Pittingerkaren_@hotmail.com;admin@arrowheadmanor.com;algnemes@comcst.net;ashleyctoole@gmail.com;carl@horecky.com;board@bfarmshoa.org;bradengine@aol.com;cfliberatore@gmail.com;chcastleman@comcast.net;claymeason@yahoo.com;deb@carneylaw.net;dreedfineline@aol.com;evergreenhighlands@gmail.com;fsa333@aol.com;gkollman@cityofwestminster.us;hanseninc@gmail.com;jeffrey_orlowski@nps.gov;kathy@kchoa.com;kathy@kchoa.com.;kristy@epiphanydesigngroup.com;lam@calibre.us.com;laneengr@comcast.net;mhanson@prospectdistrict.org;mkbtoy@yahoo.com;mlrichardson@apc.us.com;neil3@q.com;nicolemoves@gmail.com;pksurv@aol.com;rmheine1@msn.com;rmve2@comcast.net;rumurphy@gmail.com;satruj_437@hotmail.com;shannon@milehighoutdoor.com;skigolden@yahoo.com;tclancy911@aol.com;team@planwest.com;tegcoalcreek@gmail.com;treidski@hotmail.com;

Regulation Advisory Panel

1812eagle@gmail.com; al@pcsgroupco.com; childreth@foxrothschild.com; dean@evstudio.com; deb@carneylaw.net; meredethward@msn.com; dmsmn5@aol.com; douglassengineering1@gmail.com; esther.kettering@cushwake.com; ethan@baselinecorp.com; jeanne@chadwickplanning.com;

jking@evergreenfirerescue.com; jveres0@gmail.com; kbrooks@westmetrofire.org; mhanson@prospectdistrict.org; mlrichardson@apc.us.com; phorn@martinmartin.com; wrb@urbanfrontier.com; ynotbev@aol.com; rrush@evergreenfirerescue.com; chris@ballprop.com;

Water and Sanitation Districts

Gary.boothe@denverwater.org;Amy.turney@denverwater.org;PVWSD.David@comcast.net;pvwsd@comcast.net;aj@publicalliancellc.com;asd@applewoodsan.org;dick@rjslawpc.com;barbara@roxwater.org;mike@roxwater.org;barry@wrwdistrict.com;bearcreekwater@bearcreekwater.org;barney.fix@merrick.com;janwalker@bearcreekwater.org;berkeleywater@gmail.com;blavoie@highlandsranch.org;calane@plattecanyon.org;tpcocozzella@plattecanyon.org;cbrownell@geneseewater.com;cschauder@evergreenmetrodistrict.com;cusp@cusp.ws;reid.dewalt@state.co.us;engineering@cmwc.net;info@bcwaterms.org;info@bennettbearcreekfarmsdistrict.com;info@lookoutmountainwaterdistrict.org;will.raatz@w2eng.com;jcs@jsimonson.com;kgunderson@broomfield.org;ljohnson@sdmsi.com;manager@greenmountainwater.org;manager@lakehurstwater.org;sdaldegan@lakehurstwater.org;mstaheli@cordesco.com;mwsd@qwestoffice.net;mwsd@qwestoffice.net;nicki@jsimonson.com;nickie@nmholderfinancial.com;norm@hch2o.com;rlewis@rockymtnoptions.com;office@indianhillswater.com;office@meadowbrookwaterdistrict.com;office@willowbrookwater.org;steve@purringtoncivil.com;philrvwsd@comcast.net;rcox@fruitdale.net;gmariano@fruitdale.net;bwillis@martinmartin.com;sbeck@sdmsi.com;bwillis@martinmartin.com;aganda@martinmartin.com;sgrooter@cityofwestminster.us;stevejhill@earthlink.net;tanderson@kcwater.org;timl@bancroftclover.com;Barney.fix@merrick.com;tjbenton80425@aol.com;v.waterdist_kathy@comcast.net;wendy@ntmwater.org;bart@ntmwater.org;

Utilities

platreferral@unitedpower.com;donna.L.George@xcelenergy.com;bkaufman@irea.coop;jgutierrez@summitutilitiesinc.com;kayla_jones3@comcast.com;platreview@lumen.com;

Counties

Planreferralrequest@douglas.co.us;developmentsubmittals@adcogov.org;clarue@adcogov.org;frollenhagen@co.clear-creek.co.us;ruschmyer@co.clear-creek.co.us;jdeagan@parkco.us;msmith@parkco.us;planner@bouldercounty.org;pfogg@bouldercounty.org;planningapps@broomfield.org;referrals@arapahoegov.com;tpetersen@co.gilpin.co.us;rrears@co.gilpin.co.us;

Fire Protection Districts

GPedigo@cityofwestminster.us;JSTRICKER@cityofgolden.net;sparker@cityofgolden.net;bill.lucatuorto@yahoo.com;chief1@highlandrescue.org;admin@highlandrescue.org;chief@IHFR.org;cmalmgren@pleasantviewfire.com;ddifeo@RMTD.net;general@coalcreekcanyonfd.org;dharkwell@msn.com;gjudge@wispertel.net;jbrennan@westmetrofire.org;jpuffett@geneseefire.org;mfinocchio@edgewaterco.com;nffpd@hotmail.com;randongrimes@foothillsfire.org;chief1@highlandrescue.org;admin@highlandrescue.org;referrals@southmetro.org;ripatenco@fairmountfire.org;rrush@evergreenfirerescue.com;sgosselin@northmetrofire.org;fireprevention@northmetrofire.org;sshirlaw@icfpd.net;tlucero@icfpd.net;steven.parker@arvadafireco.gov;steven.parker@arvadafireco.gov;scott.plumer@arvadafireco.gov;

HOA I:

anita@springsteenlaw.com; suefenn@q.com; shane@cchoapros.com;
david.kirschner@advancehoa.com; cbolla@associacolorado.com; nhoffstaetter@associacolorado.com;
rebecca.raebel@associacolorado.com; rburke@msihoa.com; cici@acmhoa.com;
Geneseebeth@yahoo.com; caronrealtyinc@att.net; kimteschke@me.com;
wsuch@homesteadmgmt.com; virginia@withcpmg.com; jon@kchoa.com;
kathy.christensen@kchoa.com; service@ciramail.com; jon@kchoa.com; kathy@kchoa.com;
Kevin.Christensen@kchoa.com; snowbird1zang@gmail.com ; cindydalvarez@yahoo.com;
erich52@gmail.com; jl30661@hotmail.com; hoa.suncreek@gmail.com;
lguardado@ehammersmith.com; clientservices@ehammersmith.com; tlarson@servicepluscm.com;
ddemarcal@coloradomanagement.com; jon@kchoa.com; kathy@kchoa.com; katie@cmsincorp.net;
Admin@cmsincorp.net; marciawlarson@gmail.com; mkfrick@gmail.com; jon.ingersoll66@gmail.com;
davebshaver@gmail.com; sargent.keith.g@gmail.com; the.rileys@hotmail.com;
bellparkestateshoa26001@gmail.com; melissa@mbf1.com; steve@denverjewelers.com;
kathypmc@hotmail.com; mrspicoli@me.com; valerieamburn@gmail.com; johnlay9@gmail.com;
scott.c.henricks@gmail.com; geerdes.sonia@gmail.com; jack@terratech.us; jetellman@gmail.com;
applewoodlanehoa@gmail.com; robertanderson123@comcast.net; lkaiser@ehammersmith.com;
nancyfelix@msn.com; ken_bland@yahoo.com; bruce.rosenlund@gmail.com;
kevin.christensen@kchoa.com; Kathy@kchoa.com; savedinosaurridge@gmail.com;
savedinosaurridge@gmail.com; eric_m_brown@yahoo.com; patti@vistamgmt.com;
patti@vistamgmt.com; rgstutz@earthlink.net; candice@kchoa.com; kathy.christensen@kchoa.com;
christina@cmsincorp.net; admin@cmsincorp.net; daralynn.butler@gmail.com; garthbutler1@msn.com;
lindaziccardi@yahoo.com; jtimmerman@rkmi.com; rjcs@att.net; 1812eagle@gmail.com;
solterrapresident@gmail.com; solterratreasurer@gmail.com; cici@acmhoa.com; lspies@msihoa.com;
btate@msihoa.com; lspies@msihoa.com; btate@msihoa.com; dona@acmhoa.com;
jayna@acmhoa.com; lspies@msihoa.com; btate@msihoa.com; lspies@msihoa.com;
btate@msihoa.com; lspies@msihoa.com; btate@msihoa.com; misty.thurman@advancehoa.com;
jrademacher@associacolorado.com; agusa@hoamco.com; sally@carruthproperties.com;
dennis@carruthproperties.com; ashley.gonzales@kchoa.com; Kathy@kchoa.com;
customerservice@associacolorado.com; scorn@associacolorado.com; gzuppa@associacolorado.com;
ashbaughe@gmail.com; jimamos.s1002@msn.com; ricbechter@comcast.net; chip.brunk@gmail.com;
klast@comcast.net; ivigil@bluehawkmgmt.net; cbroach@bluehawkmgmt.net;
heatherfurger@gmail.com; wallack44@gmail.com; lhill@tmmccares.com; springhill_hoa@hotmail.com;
jamesspringhill@outlook.com; hiwanhills@gmail.com; hiwanhills@gmail.com;
lauren.gerbholz@advancehoa.com; ddeley@earthlink.net; btate@msihoa.com; bjhanse2@gmail.com;
luannkswim@gmail.com; marianne.ortiz@live.com; miransl56@aol.com; ken@kenbrumelle.com;
timshangraw@emsidenver.com; cogreatstuff@gmail.com; hilltopshop@aol.com; deb@carneylaw.net;
schemel@q.com; twaltemath@aol.com; ray@cohopejeffco.com; wrmoorejr@msn.com;
diane@cohopejeffco.com; columbinehills80128@gmail.com; mydelibob@yahoo.com;
candice.jackson@kchoa.com; kathy@kchoa.com; info@ckha.org; pasperj@comcast.net;
dennismontaguecasey@msn.com; cksehoa@gmail.com; normandavis5344@gmail.com;
cksehoa@gmail.com; gsteward54@gmail.com; cksiihoatreasurer@gmail.com;
pres.sodalakes@gmail.com; treas.sodalakes@gmail.com; steigen@msihoa.com; cwcatalk@gmail.com;
rk.simonsen@att.net; tony.carmeli@gmail.com; calebaughj@me.com; wbdietz@yahoo.com;
larry.hayes1604@gmail.com; tripley1953@gmail.com; tina@kchoa.com; kathy.christensen@kchoa.com;

kmkulasza@comcast.net; evergreenhighlands@gmail.com; secretary@emha.us; president@emha.us; caronrealtyinc@att.net; dnjbecker@msn.com; suzy@geneseefoundation.org; cgarlasco@gmail.com; danagrhoa@outlook.com; bgeddes191@aol.com; daveo71@yahoo.com; info@springranchpoa.org; ltworthvmd@gmail.com; jybkh1919@gmail.com;

HOA II:

spencer.s.hamilton@gmail.com; lgydvosb@msn.com; president@hiwan.com; presidentislandathiwanhoa@gmail.com; vpislandathiwanhoa@gmail.com; vince@rozmiarek.com; franevers@centurylink.net; etomandjudy@centurylink.net; briany@kcranch.org; alhintz@aol.com; gjshin@msn.com; treasurer@kittredgeco.org; president@kittredgeco.org; Burke_n_mel@comcast.net; villarecca@comcast.net; suevgibbs@aol.com; bbnevins@yahoo.com; nancysommer@msn.com; scott.troyer87@hotmail.com; garydmckay@comcast.net; neia.president@gmail.com; kwgreenman@yahoo.com; angela@kchoa.com; cbndit@aol.com; alanbhendrix@yahoo.com; ted@merriamlaw.com; pebelanger@glassdesignresources.com; kathschroeder@msn.com; shellymeans@hotmail.com; tinamarie@pmidenvermetro.com; jmamusciano7@comcast.net; meredithaward@msn.com; ashleyjohnston730@gmail.com; greenyvett@gmail.com; jayna@acmhoa.com; diana@acmhoa.com; cici@acmhoa.com; colleen@acmhoa.com; marti44@aol.com; Alisa.Nixon@kchoa.com; tandyjones@gmail.com; djc@al-tar.com; cathy@skylinedenver.com; terri@skylinedenver.com; sthomas@homesteadmgmt.com; krliesveld@homesteadmgmt.com; barbmac@comcast.net; earthdesignslsc@aol.com; dhastings@lcmpm.com; mark@donelsonarchitecture.com; slmowatt@hotmail.com; sean.vanberschot@prosono.com; valleyhi@valleyhi.org; dls.beat.stanfurd@gmail.com; brennandanp@gmail.com; mpoolet@gmail.com; brandymaze@hotmail.com; spindelcarolyn@yahoo.com; ricdane@aol.com; steigen@msihoa.com; btate@msihoa.com; janeproe@comcast.net; phil@phhco.com; lilpeat73@yahoo.com; norm.dunn@outlook.com; 5953toscano@comcast.net; Jack@cmsincorp.net; Admin@cmsincorp.net; lhill@tmmccares.com; STeigen@msihoa.com; btate@msihoa.com; meredith@kchoa.com; andyreed62@gmail.com; tvhoapresident@gmail.com; steved@laudercompany.com; neil@nblank.com; president@hiwanhomeowners.org; donb34@comcast.net; lcw0901@comcast.net; chan@chpollock.com; mcrocker@evergreenbookkeepers.com; switulski72@gmail.com; hageninsurance@hotmail.com; bkbennett2001@yahoo.com; danielswelchester@gmail.com; manyeyes49@hotmail.com; clpimm@aol.com; christina@cmsincorp.net; newwestproperty@gmail.com; pgumbas@aol.com; secretary@orchardhoa.org; president@orchardhoa.org; westranchgate@qwestoffice.net; bob@ogdonventures.com; tkauffung@hotmail.com; wburdan119@aol.com; alan@hardsavellc.com; sally@carruthproperties.com; dennis@carruthproperties.com; rsimms@rsimmspc.com; bernie@imark-co.com; lspies@msihoa.com; btate@msihoa.com; qatpartner@aol.com; estates@flood-works.com; mnowell@cchoapros.com; info@wsosoa.org; northmaster@wsosoa.org; artopia4751@gmail.com; watts@acmhoa.com; frutr@q.com; delrumph@aol.com; terryanderson2@comcast.net; telebark@myedl.com; jbholmes25@yahoo.com; jhnichols50@msn.com; dduckman@msn.com; melinda@realworldsolutions.us; cinocco@sbcglobal.net; Katie@cmsincorp.net; admin@cmsincorp.net; akelly@crsofcolorado.com; wraffaeli@icloud.com; froandpoka@msn.com; daviddesch@comcast.net; jscott@firstrounders.com; enoyes@mbpros.net; kelly@vistamgmt.com; cici@acmhoa.com; lindaropes@comcast.net; vgchild@comcast.net; edeegail@yahoo.com; donaldgparker@gmail.com;

mrichardson@4shoa.com; mrichardson@4shoa.com; schmidtjam@comcast.net; codychristman@ymail.com; huebels@aol.com; cgrush1996@yahoo.com; greg.reiman@comcast.net; lhill@tmmccares.com; frontdesk@tmmccares.com; Kathy@kchoa.com; jahind2@yahoo.com; galles.eric@gmail.com; elkfallspoapres@gmail.com; elkfallspoa@gmail.com; suzannestmartin@gmail.com; yeagerfam33@hotmail.com; mmillage@tmmccares.com; mpeck@tmmccares.com; denise@5150cm.com; tchudy@tmmccares.com; tom@preferredleasing.net; communitycare@ehammersmith.com; kh15811@yahoo.com; n.keppen@msihoa.com; jboy@netscape.com; bwaryanka@gmail.com; waynepaugh@gmail.com; alisa.nixon@kchoa.com; tvlaberge@gmail.com; cglaberge@gmail.com; whittend@comcast.net; mjduran1@live.com; fdmuldoon@comcast.net; plefever@grantranch.org; lspies@msihoa.com; rburke@msihoa.com;

HOA III:

tina.white@kchoa.com; nnoll3@yahoo.com; asybesma@austin.rr.com; sean@mmhoaservices.com; tdorth@msihoa.com; tstephens@msihoa.com; lkaiser@ehammersmith.com; will.bottoms@dinoridge.org; deb@carneylaw.net; joanobert@yahoo.com; tina@kchoa.com; kevin@kchoa.com; kathy.christensen@kchoa.com; alisa.nixon@kchoa.com; kevin.christensen@kchoa.com; gail@MSCCM.com; mgonring@msn.com; debellis3@comcast.net; candice@kchoa.com; candice@kchoa.com; kathy.christensen@kchoa.com; tina@kchoa.com; kathy.christensen@kchoa.com; twtyrrell@live.com; bobandhollyking@msn.com; Mkharts@gmail.com; rwhite2@farmersagent.com; jon@kchoa.com; kathy.christensen@kchoa.com; meredith@kchoa.com; kathy.christensen@kchoa.com; meredith.thayer@kchoa.com; kathy.christensen@kchoa.com; mosielaff@gmail.com; rwmboard@gmail.com; john@ehammersmith.com; contact@evergreenlegacyfund.org; dean@evstudio.com; jon@kchoa.com; kathy.christensen@kchoa.com; donaldsno@msn.com; derrhitt@yahoo.com; cmorgan@homesteadmgmt.com; ronbrittanyoaks@gmail.com; info@welca-hoa.com; amyskinner53@comcast.net; clechris1@msn.com; cheryllovecchio@yahoo.com; lsk1041@gmail.com; jdjohannsen@cs.com; billrobie@prodigy.net; paradisehillsboard@gmail.com; craig.southorn@mortenson.com; cici@acmhoa.com; colleen@acmhoa.com; admin@cmsincorp.net; tomdarr@yahoo.com; cdeehring@mac.com; emasterson@aol.com; jenny@advancehoa.com; admin@milehighmg.com; jeantate@enviro-support.com; mthanson@earthlink.net; drpoa.president@gmail.com; drpoa.secretary2020@gmail.com; lbcjrquarters@hotmail.com; hobsonstaxes@msn.com; rmve2@comcast.net; PamSellsColoradoHomes@gmail.com; tortiz@associacolorado.com; leila@smashmarketing.com; barbrunfree@gmail.com; vdr825@yahoo.com; brandonrigo@hotmail.com; ejskagen@hotmail.com; yjludwig@msn.com; djlbeck@gmail.com; mbramlett@associacolorado.com; customerservice@associacolorado.com; virginia@withcpmg.com; jen@maximummgt.com; john@lakehurstwest5.com; kathy.christensen@kchoa.com; Bill@cmsincorp.net; patiohoapresident@gmail.com; steigen@msihoa.com; btate@msihoa.com; angela@kchoa.com; kathy.christensen@kchoa.com; angela@kchoa.com; angela@kchoa.com; brandy.hughes@kchoa.com; clientservices@kchoa.com; jon@kchoa.com; mpoolet@gmail.com; jklitz@comcast.net; christina@cmsincorp.net; admin@cmsincorp.net; services@skylinedenver.com; cathy@skylinedenver.com; jack@cmsincorp.net; admin@cmsincorp.net; candice.jackson@kchoa.com; d.dienstfrei@praisechurch.org; Bill@cmsincorp.net; Admin@cmsincorp.net; js164world@live.com; denniscassell@gmail.com; jimmy.roy@earthlink.net; 1812eagle@gmail.com; KevinLundquist@gmail.com;

clare.lundquist@gmail.com; manager@zeatoproperty.com; liquid1018@gmail.com; MAPLEVALLEYARVADA@GMAIL.COM; Tory.Korthuis@fbci.org; marcia.holly@advancehoa.com; mbhboard@gmail.com; support@mmhoaservices.com; mwfneighborhood@gmail.com; LEGlassburn@aol.com; clientservices@kchoa.com; lsprain@msn.com; mcurtiss@comcast.net; pbkaygi@gmail.com; wsufans@wispertel.net; peacefulhillsco@gmail.com; tbkleban@msn.com; Delygl@msn.com; Meganrcastle@gmail.com; watts@acmhoa.com; danette@acmhoa.com; conawaybc@gmail.com; conawaydiane@gmail.com; dave@regionalsalescompany.com; Mikeandkeith@yahoo.com; bill@dmdbuilders.com; admin@cmsincorp.net; christina@cmsincorp.net; admin@cmsincorp.net; amanda@cmsincorp.net; admin@cmsincorp.net; christina@cmsincorp.net; admin@cmsincorp.net; christina@cmsincorp.net; admin@cmsincorp.net; christina@cmsincorp.net; admin@cmsincorp.net; amanda@cmsincorp.net; admin@cmsincorp.net; pripko@sdmsi.com; rwilliams@sdmsi.com; batwood5@comcast.net; nicole.hemmer@gmail.com; garry4maverick@centurylink.net; bassbros@msn.com; paul.d.schaffnit@lmco.com; ltsperry@comcast.net; robie.abraham@gmail.com; scott.bristol@scmcolorado.com; pp925847@yahoo.com; dave@gcpaint.com; cragmontneighbors@gmail.com; mtnparadise@comcast.net; tomjunker51@gmail.com; trappersglenhoa@gmail.com;

BCC

commish1@jeffco.us; commish2@jeffco.us; commish3@jeffco.us

BOA

ejblumer@msn.com; efordces@comcast.net; j.a.jehn@jehnengineering.com; p_warb@msn.com; kipkolkmeier@gmail.com; gregromberg@comcast.net; powersquare@comcast.net

PC

alemmer@arch-syn.com; brianbecker.pe@gmail.com; davidduncn@gmail.com; jjost@jostenergylaw.com; jmeyer3808@gmail.com; tprogers@gcgcre.com; t.o.owens@gmail.com; wendy@wendyspencercfp.com; lucid720@gmail.com

Planning&Zoning-All@co.jefferson.co.us

Interested Citizens

P & J Olson <wsufans@wispertel.net>

Lindsey Wire

From: P&Z Admin
Sent: Thursday, April 24, 2025 2:34 PM
To: PZ-Regulation-Revisions
Subject: Regulation Amendment Case 22-122945AM - Regulation Amendments pertaining to Transportation and Access Standards - Public Hearing Notification
Attachments: 01 Summary of Proposed Regulation Updates 21125.pdf

Dear Agency/Interested Party,

Jefferson County Planning & Zoning is proposing a Regulation Amendment process pertaining to the Transportation Design and Construction Manual, Zoning Resolution Sections 2 and 16, Land Development Regulation Section 15 and the Storm Drainage Design and Technical Criteria. **A summary of changes can be found attached to this email.**

Final Red-marked drafts can be found in both Word and Adobe PDF formats on our Regulation Revision website and in the case folder (22-122945AM) here.

Public Hearings for these proposed amendments have been scheduled for the following dates:

- **Planning Commission Hearing - May 14th, 2025 at 6:15 PM**
- **Board of County Commissioners Hearing - June 10th, 2025 at 9 AM**

If you have any questions, please contact Planning and Zoning Regulation Revisions at PZRegRev@jeffco.us.

Thank you,

Planning & Zoning
Jefferson County Planning and Zoning
100 Jefferson County Parkway, Suite 3550
Golden, CO 80419
o (303) 271-8700
www.https://planning.jeffco.us/

Help us shape the future of Jefferson County by visiting the Together Jeffco website!
Click the image below to visit our website: https://togetherjeffco.com

JEFFERSON COUNTY COLORADO
Planning and Zoning

We encourage scheduling an appointment to see staff during our office hours Monday - Thursday. Please schedule appointments and submit applications online. Go to planning.jeffco.us for more information.
RE: 22-122945AM_HOA I

City

DRT@littletongov.org;TownPlanner@columbinevalley.org;aneverdahl@morrisonco.us;cchristensen@morrisonco.us;bowmartown@gmail.com;brenda@lakesideamusementpark.com;collinsb@bouldercolorado.gov;ashleym@bouldercolorado.gov;developmentservices@denvergov.org;brad.eckert@denvergov.org;jmcconne@cityofwestminster.us; acastro@safebuilt.com; lritchie@louisvilleco.gov;mgreer@tomv.org;pauric@lakewood.org;shadej@lakewood.org;Tonbis@lakewood.org;planner@bouldercounty.org;pfogg@bouldercounty.org;planning@cityofgolden.net;planning@superiorcolorado.gov;planningapps@broomfield.org;rsmetana@arvada.org;wcharles@englewoodco.gov; zoning@ci.wheatridge.co.us;

County

Planreferralrequest@douglas.co.us;developmentsubmittals@adcogov.org;clarue@adcogov.org; gmcallister@clearcreekcounty.us;cruschmyer@co.clear-creek.co.us;jdeagan@parkco.us;msmith@parkco.us;planner@bouldercounty.org;pfogg@bouldercounty.org;planningapps@broomfield.org;referrals@arapahoegov.com;rrears@co.gilpin.co.us;rrears@co.gilpin.co.us;

External Referral Contacts

CGS_LUR@mines.edu;Ioana.comaniciu@state.co.us;Kent.J.Christiansen@usps.gov;krissy.j.summerfield@usps.gov;Jason.g.Eddleman@usps.gov;admin@evergreenchamber.org;afeinstein@jcha.org;asummers@drcog.org;ben.hammar@state.co.us;brad.eckert@denvergov.org;ccufre@coloradoopenlands.org;cdot_r1access_groupE@state.co.us;cdphe_localreferral@state.co.us;coloradoes@fws.gov;director@goconifer.com;eliot.hoyt@state.co.us;engineering@rtd-denver.com;erhample@jeffco.us;Karla.Melgar_Velis@colostate.edu;inquiries@nist.gov;jbeck@blm.gov;jcd@jeffersoncd.com;john.white@colostate.edu;jpphaadmin@gmail.com;ken.mushinski@cotterusa.com; kiel.g.downing@usace.army.mil;lisa.heagley@usda.gov;nathanael.berry@usda.gov;lseeger@jeffcoedc.org;margaret.vigil@state.co.us;mark.lamb@state.co.us;matt.martinez@state.co.us;oahp@state.co.us;submittals@mhfd.org;tim_connors@nps.gov;heather_eggleston@nps.gov;Linda_Moery@nps.gov;todd.leopold@state.co.us;treed@jeffco.k12.co.us;rhuxley@jeffco.k12.co.us;Matthew.Hanks@jeffco.k12.co.us;wrb@urbanfrontier.com;

Fire Districts

GPedigo@cityofwestminster.us;bill.lucatuorto@yahoo.com;chief1@highlandrescue.org;admin@highlandrescue.org;chief@IHFR.org;cmalmgren@pleasantviewfire.com;twaller@pleasantviewmetro.org;fireprevention@evergreenfirerescue.com;general@coalcreekcanyonfd.org;chief@coalcreekcanyonfd.org;gjudge@wispertel.net;jbrennan@westmetrofire.org;jgoorman@westmetrofire.org;jeffvelasco@foothillsfire.org;chief1@highlandrescue.org;admin@highlandrescue.org;jpuffett@geneseefire.org;kbenson@goldengatefire.org;nffpd@hotmail.com;rrush@elkcreekfire.org;referrals@southmetro.org;rrush@elkcreekfire.org;sgosselin@northmetrofire.org;fireprevention@northmetrofire.org;sjones@cityofgolden.net;jpriestly@cityofgolden.net;sshirlaw@icfpd.net;steven.parker@arvadafireco.gov; scott.plumer@arvadafireco.gov

HOA

lclemens5858@gmail.com; femathes@gmail.com; jford@4x4concrete.com; debbieeford@outlook.com ; BOARD@CEHOA.NET; scottjkeen@gmail.com; nstroeher@hotmail.com; president@thevistasevergreen.com; vp@thevistasevergreen.com; danette@acmhoa.com; christian@acmhoa.com; caronrealtyinc@att.net; sherry.mcdowell1@icloud.com; customercare@havencm.com; nkelly@havencm.com; tpadilla@acmhoa.com; deercreekmesa@gmail.com; jvlaw@jjvlaw.digitalspacemail8.net; Dpettigrew@msihoa.com; sgna.lakewood@gmail.com; sgna.lakewood@gmail.com; customercare@havencm.com; nkelly@havencm.com; dbehrent@tmmccares.com; customercare@havencm.com; nkelly@havencm.com; belanger.laura@gmail.com; ricbechter@comcast.net; chip.brunk@gmail.com; lehoaboard@gmail.com; lehoaboard@gmail.com; mttop@aol.com; klast@comcast.net; cbroach@bluehawkmgmt.net; cbroach@bluehawkmgmt.net; heatherfurger@gmail.com; lhill@tmmccares.com; springhill_hoa@hotmail.com; jamesspringhill@outlook.com; hiwanhills@gmail.com; hiwanhills@gmail.com; lauren.gerbholz@advancehoa.com; ddeley@earthlink.net; rhansen@msihoa.com; bjhanse2@gmail.com; d-braden@comcast.net; marianne.ortiz@live.com; miransl56@aol.com; ken@kenbrumelle.com; timshangraw@emsidenver.com; hilltopshop@aol.com; hilltopshop@aol.com; ContactUs@CAREJeffco.org; schemel@q.com; twaltemath@aol.com; wrmoorejr@msn.com; diane@cohopejeffco.com; columbinehills80128@gmail.com; mydelibob@yahoo.com; candice.jackson@kchoa.com; kathy@kchoa.com; atwisselman@msn.com; knollscolumbinehoa@gmail.com ; SJHantelman@gmail.com; andylisamcclure@earthlink.net; pasperj@comcast.net; cksehoa@gmail.com; cksemem2@gmail.com; pres.sodalakes@gmail.com; treas.sodalakes@gmail.com; steigen@msihoa.com; cwcatalk@gmail.com; rk.simonsen@att.net; regrimm@yahoo.com; dosborn@q.com; wbdietz@yahoo.com; larry.hayes1604@gmail.com; tripley1953@gmail.com; tina@kchoa.com; kathy.christensen@kchoa.com; kmkulasza@comcast.net; evergreenhighlands@gmail.com; secretary@emha.us; president@emha.us; caronrealtyinc@att.net; johnellisevergreen@gmail.com; briank@geneseefoundation.org; traci@geneseefoundation.org; manager@grhoa.com; assistant@grhoa.com; akovinchick@msihoa.com; ltworthvmd@gmail.com; nikstevens@outlook.com; thepreservehoaboard@gmail.com; thepreservehoaboard@gmail.com; hilldalepinespres@gmail.com; sthumbard3@gmail.com; lgydvosb@msn.com; president@hiwan.com; presidentislandathiwanhoa@gmail.com; vpislandathiwanhoa@gmail.com; mike.patterson@indianhillsco.org; ray.todd@indianhillsco.org; franevers18@gmail.com; michelehovet@gmail.com; briany@kcranch.org; sandral@kcranch.org ; alhintz@aol.com; gjshin@msn.com; president@kittredgeco.org; treasurer@kittredgeco.org; Burke_n_mel@comcast.net; srw151@hotmail.com; chelsea.paige.lawrence@gmail.com; nancysommer@msn.com; qpnbrown3@hotmail.com; scott.troyer87@hotmail.com; garydmckay@comcast.net; neia.president@gmail.com; kwgreenman@yahoo.com; cbndit@aol.com; alanbhendrix@yahoo.com; hrwasko@hotmail.com; panoramaestateshoa@gmail.com; shellymeans@hotmail.com; fred.kress@cbrealty.com; Sahlilaw@gmail.com; meredithaward@msn.com; ashleyjohnston730@gmail.com; greenyvett@gmail.com; diana@acmhoa.com; cici@acmhoa.com; marti44@aol.com; brittany.bazan@kchoa.com; cathy@skylinedenver.com; services@skylinedenver.com; sthomas@homesteadmgmt.com; krliesveld@homesteadmgmt.com; barbmac@comcast.net; earthdesignslsc@aol.com; dhastings@lcmpm.com; mark@donelsonarchitecture.com; tvsfhoa@gmail.com; cjstrickler@conduitresources.com ; dls.beat.stanfurd@gmail.com; chuck_newby@me.com; mpoolet@gmail.com; Barbara.Weiss@ucdenver.edu;

spindelcarolyn@yahoo.com; ricdane@aol.com; steigen@msihoa.com; btate@msihoa.com; mike@windyholdings.com; lilpeat73@yahoo.com; norm.dunn@outlook.com; 5953toscano@comcast.net; abrin@tmmccares.com; lhill@tmmccares.com; STeigen@msihoa.com; btate@msihoa.com; meredith@kchoa.com; andyreed62@gmail.com; tvhoapresident@gmail.com;

neil@nblank.com; communications@hiwanhomeowners.org; lcw0901@comcast.net; angela.mays@yahoo.com; gretchen@stubenvoll.net; switulski72@gmail.com; Stephen@bisque.com; legries@gmail.com; danielswelchester@gmail.com; jongoldman@comcast.net; clpimm@aol.com; christina@cmsincorp.net; newwestproperty@gmail.com; pgumbas@aol.com; joby.schaffer@gmail.com; tjraub@hotmail.com; westranchgate@qwestoffice.net; bob@ogdonventures.com; tkauffung@hotmail.com; wburdan119@aol.com; alan@hardsavellc.com; sally@carruthproperties.com; dennis@carruthproperties.com; rsimms@rsimmspc.com; MattWilliamsCottonwoodWestHOA@gmail.com; bernie@arvadamall.com; lspies@msihoa.com; btate@msihoa.com; qatpartner@aol.com; estates@flood-works.com; mnowell@cchoapros.com; info@wsosoa.org; artopia4751@gmail.com; watts@acmhoa.com; frutr@q.com; admin@AMAcolorado.com; shirleyofconifer@gmail.com; christy.seabourne@gmail.com; jbholmes25@yahoo.com; jhnichols50@msn.com; dduckman@msn.com; melinda@realworldsolutions.us; bhybinette@gmail.com; Katie@cmsincorp.net; adrianna@cmsincorp.net; akelly@crsofcolorado.com; president@ridgepointhoa.org; treasurer-vp@ridgepointhoa.org; daviddesch@comcast.net; jscott@firstrounders.com; enoyes@mbpros.net; MillerK@keystonepacific.com; cici@acmhoa.com; lindaropes@comcast.net; cskeelan@gmail.com; edeegail@yahoo.com; donaldgparker@gmail.com; bmcmahon@4shoa.com; mhall@4shoa.com; schmidtjam@comcast.net; codychristman@ymail.com; huebels@aol.com; sparks.mary@icloud.com; fzustak@comcast.net; lhill@tmmccares.com; dpeck@tmmccares.com; Kathy@kchoa.com; jahind2@yahoo.com; galles.eric@gmail.com; elkfallspoapres@gmail.com; elkfallspoavp@gmail.com; suzannestmartin@gmail.com; yeagerfam33@hotmail.com; mmillage@tmmccares.com; mpeck@tmmccares.com; denise@5150cm.com; tchudy@tmmccares.com; tom@preferredleasing.net; aperin@ehammersmith.com; kh15811@yahoo.com; n.keppen@msihoa.com; jboy@netscape.com; bwaryanka@gmail.com; waynepaugh@gmail.com; alisa.nixon@kchoa.com; tvlaberge@gmail.com; zakwessel@gmail.com; whittend@comcast.net; mjduran1@live.com; fdmuldoon@comcast.net; plefever@grantranch.org; lspies@msihoa.com; rburke@msihoa.com; rramelow@msihoa.com; customercare@havencm.com; nkelly@havencm.com; tina.white@kchoa.com; nnoll3@yahoo.com; asybesma@austin.rr.com; sean@mmhoaservices.com; tdorth@msihoa.com; tstephens@msihoa.com; lkaiser@ehammersmith.com; will.bottoms@dinoridge.org; deb@carneylaw.net; joanobert@yahoo.com; tina@kchoa.com; kevin@kchoa.com; kathy.christensen@kchoa.com; brandy.hughes@kchoa.com; kevin.christensen@kchoa.com; gailclark3415@gmail.com; mgonring@msn.com; debellis3@comcast.net; kathy.christensen@kchoa.com; kathy.christensen@kchoa.com; tina@kchoa.com; kathy.christensen@kchoa.com; jrobert@mines.edu; sean_steeves@hotmail.com; rwhite2@farmersagent.com; jon@kchoa.com; kathy.christensen@kchoa.com; meredith@kchoa.com; kathy.christensen@kchoa.com; meredith.thayer@kchoa.com; kathy.christensen@kchoa.com; mosielaff@gmail.com; rwmboard@gmail.com; john@ehammersmith.com; contact@evergreenlegacyfund.org; dean@evstudio.com; jon@kchoa.com; kathy.christensen@kchoa.com; donaldsno@msn.com; derrhitt@yahoo.com; CLAscani@homesteadmgmt.com; info@welca-hoa.com; zquicky@msn.com; clechris1@msn.com; nortonha2693487@gmail.com; shannon.loizzo@realmanage.com;

billrobie@prodigy.net; harnagels@aol.com; presidentofphhoa@gmail.com; cici@acmhoa.com; amber@cmsincorp.net; ileana@cmsincorp.net; tomdarr@yahoo.com; cdeehring@mac.com; jenny@advancehoa.com; admin@milehighmg.com; jeantate@enviro-support.com; mthanson@earthlink.net; drpoa.secretary2020@gmail.com; drpoa.vicepresident@gmail.com; lbcjrquarters@hotmail.com; hobsonstaxes@msn.com; rmve2@comcast.net; janet@janetlane.net; achromy@gmail.com; dawn.bates@advancehoa.com; tgebes@gmail.com; barbrunfree@gmail.com; vdr825@yahoo.com; brandonrigo@hotmail.com; ejskagen@hotmail.com; yjludwig@msn.com; djlbeck@gmail.com;

virginia@withcpmg.com; jen@maximummgt.com; john@lakehurstwest5.com; kathy.christensen@kchoa.com; anita@springsteenlaw.com; suefenn@q.com; shane@cchoapros.com; david.kirschner@advancehoa.com; cbolla@associacolorado.com; nhoffstaetter@associacolorado.com; rebecca.raebel@associacolorado.com; rburke@msihoa.com; cici@acmhoa.com; Geneseebeth@yahoo.com; caronrealtyinc@att.net; kimteschke@me.com; wsuch@homesteadmgmt.com; virginia@withcpmg.com; jon@kchoa.com; kathy.christensen@kchoa.com; service@ciramail.com; jon@kchoa.com; kathy@kchoa.com; Kevin.Christensen@kchoa.com; snowbird1zang@gmail.com; Michael.Brennan@kchoa.com; rljones05@yahoo.com; erich52@gmail.com; jl30661@hotmail.com; hoa.suncreek@gmail.com; lguardado@ehammersmith.com; clientservices@ehammersmith.com; tlarson@servicepluscm.com; ddemarcal@coloradomanagement.com; jon@kchoa.com; kathy@kchoa.com; marcia.holly@advancehoa.com; Cheryl.aphoa@gmail.com; barrie.fiedler@gmail.com; mkfrick@gmail.com; jon.ingersoll66@gmail.com; osgoodhartness@gmail.com; sargent.keith.g@gmail.com; the.rileys@hotmail.com; bellparkestateshoa26001@gmail.com; bellparkestateshoa26001@gmail.com; steve@denverjewelers.com; kathypmc@hotmail.com; mrspicoli@me.com; valerieamburn@gmail.com; johnlay9@gmail.com; scott.c.henricks@gmail.com; geerdes.sonia@gmail.com; rjspies18@gmail.com; janhcrosby@gmail.com; applewoodlanehoa@gmail.com; robertanderson123@comcast.net; lkaiser@ehammersmith.com; nancyfelix@msn.com; ken_bland@yahoo.com; bruce.rosenlund@gmail.com; kevin.christensen@kchoa.com; Kathy@kchoa.com; savedinosaurridge@gmail.com; eric_m_brown@yahoo.com; PSego@keystonepacific.com; PSego@keystonepacific.com; rgstutz@earthlink.net; cathy@skylinedenver.com; services@skylinedenver.com; christina@cmsincorp.net; admin@cmsincorp.net; daralynn.butler@gmail.com; garthbutler1@msn.com; lindaziccardi@yahoo.com; rjcs@att.net; 1812eagle@gmail.com; solterrapresident@gmail.com; solterratreasurer@gmail.com; cici@acmhoa.com; lspies@msihoa.com; landrews@msihoa.com; lspies@msihoa.com; landrews@msihoa.com; Danette@acmhoa.com; Christian@acmhoa.com; lspies@msihoa.com; btate@msihoa.com; lspies@msihoa.com; btate@msihoa.com; lspies@msihoa.com; btate@msihoa.com; misty.thurman@advancehoa.com; jrademacher@associacolorado.com; agusa@hoamco.com; shaffergreens@gmail.com; jstorchevoy@emporiaenergy.com; clayton.russell@kchoa.com; clayton.russell@kchoa.com; customerservice@associacolorado.com; scorn@associacolorado.com; gzuppa@associacolorado.com; jen@cmsincorp.net; adriana@cmsincorp.net; steigen@msihoa.com; btate@msihoa.com; angela@kchoa.com; kathy.christensen@kchoa.com; angela@kchoa.com; angela@kchoa.com; brandy.hughes@kchoa.com; clientservices@kchoa.com; jon@kchoa.com; mpoolet@gmail.com; jeantate@enviro-support.com; christina@cmsincorp.net; admin@cmsincorp.net; services@skylinedenver.com; cathy@skylinedenver.com; jack@cmsincorp.net; morgan@cmsincorp.net;

candice.jackson@kchoa.com; admin@cmsincorp.net; Admin@cmsincorp.net; js164world@live.com; griesteve@msn.com; jimmy.roy@earthlink.net; 1812eagle@gmail.com; KevinLundquist@gmail.com; clare.lundquist@gmail.com; danette@acmhoa.com; christian@acmhoa.com; MAPLEVALLEYARVADA@GMAIL.COM; Tory.Korthuis@fbci.org; mbhboard@gmail.com; ColUSA81@gmail.com; artopia4751@gmail.com; mwfneighborhood@gmail.com; LEGlassburn@aol.com; clientservices@kchoa.com; lsprain@msn.com; mcurtiss@comcast.net; pbkaygi@gmail.com; peacefulhillsco@gmail.com; coug@2lazycats.com; tbkleban@msn.com; Delygl@msn.com; Meganrcastle@gmail.com; watts@acmhoa.com; danette@acmhoa.com; eadesdb@gmail.com; belinda.oakley@gmail.com; dave@regionalsalescompany.com; joha9148@colorado.edu; shanedon11@yahoo.com; christina@cmsincorp.net; admin@cmsincorp.net; christina@cmsincorp.net; admin@cmsincorp.net; amanda@cmsincorp.net; admin@cmsincorp.net; christina@cmsincorp.net; morgan@cmsincorp.net; christina@cmsincorp.net; admin@cmsincorp.net;

PC, BOA

ashley@junipermountainhouse.com; brianbecker.pe@gmail.com; davidduncn@gmail.com>; drew.bolin@gmail.com; johnamessner@gmail.com; kelcdunne@gmail.com; stacyliles@gmail.com; tprogers@gcgcre.com; wendy@wendyspencercfp.com; gjohnson2126@gmail.com; jeff@clinedesigngroup.com; kporter2003@comcast.net; lmcgahee@mac.com; p_warb@msn.com; lester737@gmail.com; tom@bariarchitecture.com;

Internal Referral

adoran@jeffco.us;cmarkel@jeffco.us;kcisowsk@jeffco.us;dbeauvai@co.jefferson.co.us;dconway@jeffco.us;elroberts@jeffco.us;mtrubenstein@jeffco.us;esander@jeffco.us;kdouglas@jeffco.us;jshrader@jeffco.us;knewman@jeffco.us;hgutherl@jeffco.us;mdanner@jeffco.us;apanza@jeffco.us;mschuste@jeffco.us;jcohen@jeffco.us;rbishop@flyrmma.com;bmiller@flyrmma.com;panslow@co.jefferson.co.us;rtemmer@q.com;sswain@jeffco.us;steve.chestnut@jeffcolibrary.org;tkauffma@jeffco.us;pweber@jeffco.us; kparker@co.jefferson.co.us

arohwer@jeffco.us;jrwright@co.jefferson.co.us;kdean@jeffco.us;catencio@jeffco.us;khagaman@jeffco.us;mdamjano@jeffco.us;catencio@jeffco.us;mweiden@co.jefferson.co.us;mbaldwin@jeffco.us;ekrause@jeffco.us;estoner@jeffco.us;hgutherl@jeffco.us;rclark@jeffco.us;khagaman@jeffco.us;kjordan@jeffco.us; ltownsen@co.jefferson.co.us;mvanatta@co.jefferson.co.us;mschuste@jeffco.us;jcohen@jeffco.us;poconnel@jeffco.us;publichealthehlanduse@jeffco.us;tjones@jeffco.us;russheckle@jeffco.us;terbert@jeffco.us;tmaurer@jeffco.us;kbryson@jeffco.us;

Irrigation Companies

bmiddleton@broomfield.org;eve@farmersres.com;fhl.gm.mike@gmail.com;generalmanager@churchditch.org;jim.ferentchak@wwwheeler.com;johnreiber@msn.com;jrobbins@pinehurstcountryclub.com;norm@hch2o.com;liddy.armijo@molsoncoors.com;mike.wright@archden.org;minifarm2@aol.com;neal.santangelo@molsoncoors.com;peter.adrc@gmail.com;projects@farmersres.com;ssarrow@pinehurstcountryclub.com;theander@mseapc.com;

Metro Districts

management@fhmd.net;dsolin@sdmsi.com;victoriad@kcranch.org;gmcgowan9052@aol.com;dolphindance1@aol.com;Lisa.johnson@claconnect.com;SALLEN@WBAPC.COM;afinn@sdmsi.com;afrisbie@wbapc.com;angela@teleos-services.com;anna.jones@claconnect.com;barnett@timberlinedc.com;cmalmgren@pleasantviewfire.com;twaller@pleasantviewmetro.org;dave@peakdistrictmanagementllc.com;cindy.jenkins@cliftonlarsonallen.com;dolphindance1@aol.com;dsolin@sdmsi.com;eeds@gginb.com;ewhite@highlandsranch.org;firm@wbapc.com;gbaum@urbanfrontier.com;jhenry@specialdistrictlaw.com;jtanaka@wbapc.com;kseter@svwpc.com;ljohnson@sdmsi.com;mbecher@specialdistrictlaw.com;mmcgeady@mcgeadysisneros.com;mmruphy@wbapc.com;nicholas.carlson@claconnect.com;anna.jones@claconnect.com;andrew.williams@claconnect.com;office@meadowbrookwaterdistrict.com;rbilek@crsofcolorado.com;rkron@spencerfane.com;sbeck@sdmsi.com;sblair@crsofcolorado.com;tgeorge@spencerfane.com;triggle@evergreenmetro.org;

Park and Recreation Districts

Brad.eckert@denvergov.org;David.Peak@cliftonlarsonallen.com;PlanningSupport@ssprd.org;RosWil@lakewood.org;johpal@lakewood.org;brett@ckrd.org;insley@fhprd.org;seank@fhprd.org;richeller@fhprd.org;jeffg@apexprd.org;jmanwaring@ci.wheatridge.co.us;kparker@prospectdistrict.org;victoria@enthusd.com;kwsargent@msn.com;mevans@eprd.co;cvanderveen@eprd.co;mtableman@co.clear-creek.co.us;nemrdpool@gmail.com;nikki.mccabe@denvergov.org;Nikki.VanRavenswaay@DenverGov.org;pamartinez@edgewaterco.com;stecar@lakewood.org;biljew@lakewood.org;tom@beaverranch.org;traciw@kcranch.org;weecreekers@gmail.com;

Regulation Review Committee

ethan@baselinecorp.com; jveres0@gmail.com; atrietley@ventanacap.com; jtidmore@jeffcoedc.org; bill@actuallp.com; Josh@mcgdenver.com; rrush@elkcreekfire.org; arogers@mullereng.com; mlrichardson@apc.us.com; clane@jeffco.us; DHamilton@foxrothschild.com; JEddy@martinmartin.com; ynotbev2@gmail.com; dean@evstudio.com; chris@ballprop.com; deb@carneylaw.net

Brennanjr@aol.com;Jenslines@gmail.com;John@Hermanussen.net;MarkBenallo@aol.com;Pittingerkaren_@hotmail.com;admin@arrowheadmanor.com;algnemes@comcst.net;ashleyctoole@gmail.com;carl@horecky.com;board@bfarmshoa.org;bradengine@aol.com;cfliberatore@gmail.com;chcastleman@comcast.net;claymeason@yahoo.com;deb@carneylaw.net;dreedfineline@aol.com;evergreenhighlands@gmail.com;fsa333@aol.com;gkollman@cityofwestminster.us;hanseninc@gmail.com;jeffrey_orlowski@nps.gov;kathy@kchoa.com;kathy@kchoa.com.;kristy@epiphanydesigngroup.com;lam@calibre.us.com;laneengr@comcast.net;mhanson@prospectdistrict.org;mkbtoy@yahoo.com;mlrichardson@apc.us.com;neil3@q.com;nicolemoves@gmail.com;pksurv@aol.com;rmheine1@msn.com;rmve2@comcast.net;satruj_437@hotmail.com;shannon@milehighoutdoor.com;skigolden@yahoo.com;john@hermanussen.net;tclancy911@aol.com;team@planwest.com;tegcoalcreek@gmail.com;treidski@hotmail.com;

1812eagle@gmail.com;al@pcsgroupco.com;childreth@foxrothschild.com;dean@evstudio.com;deb@carneylaw.net;dmsmn5@aol.com;douglassengineering1@gmail.com;esther.kettering@cushwake.com;ethan@baselinecorp.com;jeanne@chadwickplanning.com;jking@evergreenfirerescue.com;jveres0@gmail.com;kbrooks@westmetrofire.org;mhanson@prospectdistrict.org;mlrichardson@apc.us.com;phorn@martinmartin.com;wrb@urbanfrontier.com;ynotbev@aol.com;

Utilities

platreferral@unitedpower.com;ReferralsXcelDistribution@xcelenergy.com;Alfonzo_Martinez@cable.comcast.com;bkaufman@irea.coop;jgutierrez@summitutilitiesinc.com;platreview@lumen.com;

Water and Sanitation Districts

Gary.boothe@denverwater.org;Amy.turney@denverwater.org;aj@publicalliancellc.com;asd@applewoodsan.org;barbara@roxwater.org;mike@roxwater.org;barry@wrwdistrict.com;bearcreekwater@bearcreekwater.org;barney.fix@merrick.com;janwalker@bearcreekwater.org;berkeleywater@gmail.com;blavoie@highlandsranch.org;calane@plattecanyon.org;cbrownell@geneseewater.com;cusp@cusp.ws;reid.dewalt@state.co.us;dgarcia@sdmsi.com;engineering@cmwc.net;info@bennettbearcreekfarmsdistrict.com;info@lookoutmountainwaterdistrict.org;will.raatz@w2eng.com;jcs@jsimonson.com;jstawski@evergreenmetro.org;
recept@evergreenmetro.org;kgunderson@broomfield.org;ljohnson@sdmsi.com;lvullo@kcwater.org;manager@greenmountainwater.org;manager@lakehurstwater.org;sdaldegan@lakehurstwater.org;mstaheli@cordesco.com;mwsd@mtwaterandsan.com;mwsd@qwestoffice.net;nicki@jsimonson.com;nickie@nmholderfinancial.com;norm@hch2o.com;rlewis@rockymtnoptions.com;office@meadowbrookwaterdistrict.com;office@willowbrookwater.org;steve@purringtoncivil.com;philrvwsd@comcast.net;pvwsd@pvwsdistrict.org;nickm@publicalliancellc.com;rclayshulte@earthlink.net;rcox@fruitdale.net;gmariano@fruitdale.net;bwillis@martinmartin.com;sbeck@sdmsi.com;sgrooter@cityofwestminster.us;stevejhill@earthlink.net;timl@bancroftclover.com;Barney.fix@merrick.com;tjbenton80425@aol.com;triggle@evergreenmetro.org;v.waterdist_kathy@comcast.net;wendy@ntmwater.org;bart@ntmwater.org;

Planning&Zoning-All@co.jefferson.co.us

Interested Citizens

P & J Olson <wsufans@wispertel.net>

Engineers

drew@insightengineering.org; douglassengineering1@gmail.com; chris@purringtoncivil.com; jennifer@285engineering.com; john@insightengineering.org; tfrazier@redland.com;

The Denver Post, LLC

PUBLISHER'S AFFIDAVIT

City and County of Denver)
State of Colorado)
)

The undersigned **Nicole Maestas** being first duly sworn under oath, states and affirms as follows:

1. He/she is the legal Advertising Reviewer of The Denver Post, LLC, publisher of The Denver Post and Your Hub.
2. The Denver Post and Your Hub are newspapers of general circulation that have been published continuously and without interruption for at least fifty-two weeks in Denver County and meet the legal requisites for a legal newspaper under Colo. Rev. Stat. 24-70-103.
3. The notice that is attached hereto is a true copy, published in Your Hub for West Jeffco (including the counties of Jefferson, Arapahoe, Arvada, Denver, Lakewood, Gilpin, Clear Creek, and Westminster) on the following date(s):

May 22, 2025

Signature

Subscribed and sworn to before me this 23 day of May, 2025.

Notary Public

JULIANA DASHWOOD
NOTARY PUBLIC
STATE OF COLORADO
NOTARY ID 20244034234
MY COMMISSION EXPIRES SEPTEMBER 11, 2028

(SEAL)

NOTICE OF PUBLIC HEARINGS FOR SPECIAL USE

NOTICE IS HEREBY GIVEN that the Board of County Commissioners of the County of Jefferson, State of Colorado will hold a hybrid (in-person and online virtual) public hearing on a proposed rezoning of certain property within Jefferson County, Colorado. The public hearing will be held at the Jefferson County Administration and Courts Facility, Hearing Room 1, at 100 Jefferson County Parkway, Golden, Colorado, on June 10, 2025 at 9:00 a.m. with the virtual hearing link being available on the County's website at https://www.jeffco.us/meetings .

FURTHER NOTICE IS HEREBY GIVEN that said public hearings may be continued from time to time without further notice.

Said proposed rezoning is Case No. 24-133066RZ/South Golden Road / Mt. Vernon Mixed-Use ODP Amendment, which proposes to rezone from Planned Development (PD) to a new Planned Development to amend the existing South Golden Road / Mt. Vernon Mixed-Use Official Development Plan zone district boundary which allows a mixed-use project with ground-floor retail and up to 200 multi-family residential dwelling units above, and to preserve the Rock Rest Lodge.

Said property is located at: 16121 W 10th Ave, 16129 W 10th Ave, 16005 Mt Vernon Rd, and 16100 S Golden Rd, Golden, which contains approximately 5.87 acres.

BE IT ALSO KNOWN that the text and/or maps relating to the above referenced rezoning and any text and/or maps so certified by the Jefferson County Planning Commission may be examined by contacting the Jefferson County Planning and Zoning Division during any working day. You can reach Planning & Zoning at 303-271-8700 or pzweb@jeffco.us.

BOARD OF COUNTY COMMISSIONERS
COUNTY OF JEFFERSON
STATE OF COLORADO

Published May 22, 2025 /s/ Lesley Dahlkemper, Chairman

Please note: The Denver Post will no longer be issuing paper tears. There will only be a digital copy.

PROPOSED REGULATIONS – CLEAN COPIES

TRANSPORTATION DESIGN AND CONSTRUCTION MANUAL – CLEAN COPY

Jefferson County Transportation Design & Construction Manual

JEFFERSON COUNTY, COLORADO PLANNING AND ZONING DIVISION

Revision Dates

The Transportation Design & Construction Manual, formerly known as Roadway Design & Construction Manual, adopted by the Board of County Commissioners of Jefferson County, Colorado on March 21, 1995, has since been amended on the following dates:

December 5, 1995

May 12, 1998

March 23, 1999

October 1, 2002

July 1, 2003

November 25, 2003

December 5, 2006

May 20, 2008

October 13, 2009

November 24, 2015

July 17, 2018

December 17, 2019

XX-XX-XX

Jefferson County Planning and Zoning Division

100 Jefferson County Parkway, Suite 3550, Golden, Colorado 80419

303-271-8700 ▪ http://planning.jeffco.us

Table of Contents

Chapter 1 General Provisions

1.1. Short Title
1.2. Jurisdiction
1.3. Purpose and Effect
1.4. Enactment Authority
1.5. Amendment and Revisions
1.6. Enforcement Responsibility
1.7. Review and Approval
1.8. Interpretation
1.9. Relationship to Other Standards

Chapter 2 Construction Drawing Requirements

2.1. General Requirements
2.2. Cover Sheet
2.3. Plan
2.4. Profile
2.5. Cross Sections
2.6. Details
2.7. Standard Notes

Chapter 3 Design and Technical Criteria

3.1. General
3.2. Street/Road Types
3.3. Functional Classification
3.4. Standard Templates
3.5. Horizontal Alignment
3.6. Vertical Alignment
3.7. Intersection Spacing, Vision Clearance Triangle, Sight Distance, Driveways and Private Streets/Roads
3.8. Drainage
3.9. Traffic Control
3.10 Miscellaneous

Chapter 4 Pavement Design and Technical Criteria

4.1. General Requirements
4.2. Pavement Design Report Submittal
4.3. Subgrade Investigation
4.4. Pavement Design Criteria
4.5. Pavement Design Procedure
4.6. Material Specifications

Chapter 5 Construction Specifications and Standards

5.1. Construction Specifications
5.2. Construction Standards

Chapter 6 Transportation Studies

6.1. Requirements for Transportation Studies

6.2. Transportation Information
6.3 Trip Generation Memoranda
6.4. Responsibility for Transportation Studies
6.5. Transportation Analyses
6.6. Transportation Impact Studies

Definitions

Examples: Standard Templates

Examples: Construction Standards

Design Nomographs for Pavements

Transportation Studies Formatting

Resolution

Chapter 1

General Provisions

1.1. Short Title

These regulations together with all future amendments shall be known as the "Jefferson County Transportation Design and Construction Manual" (hereafter called MANUAL) as referenced in the Jefferson County Land Development Regulation (hereafter called LDR) and the Jefferson County Zoning Resolution (hereafter called ZR).

1.2. Jurisdiction

The requirements of this MANUAL shall apply to all subdividers, developers or other landowners, their employees, agents or contractors designing and constructing public and/or private streets/roads within unincorporated areas of Jefferson County (hereafter called County), except where superseded by State and/or the Federal regulations. The foregoing design and construction of transportation systems are subject to review and approval by the County pursuant to any County regulation or requirement.

1.3. Purpose and Effect

Presented in this MANUAL are the minimum design and technical criteria for the design and construction of streets/roads. All land development or any other proposed construction submitted for approval under the provisions of the LDR and/or ZR as applicable, shall include adequate transportation system analysis and appropriate transportation system design. Such analysis and design shall conform to the criteria set forth herein. Technical criteria not specifically addressed in this MANUAL shall follow the provisions of the American Association of State Highway and Transportation Officials (AASHTO) "A Policy of Geometric Design of Highways and Streets", as amended; the Colorado Department of Transportation (CDOT) Design Standards, as amended; and the Manual on Uniform Traffic Control Devices (MUTCD), as amended.

1.4. Enactment Authority

The LDR has been adopted pursuant to the authority conferred within: Article 28 of Title 30 (County Planning); Article 2 of Title 43 (State, County, and City Highway Systems); Article 20 of Title 29 (Land Use Control and Conservation); and other applicable sections of the Colorado Revised Statutes, as amended.

This MANUAL is adopted by resolution of the Board of County Commissioners, as the authority provided by which the County promulgates the LDR.

1.5. Amendment and Revisions

These criteria may be amended as new technology is developed and/or if experience gained in the use of this MANUAL indicates a need for revision. Amendments and revisions will be made by resolution of the Board of County Commissioners.

1.6. Enforcement Responsibility

It shall be the obligation of the Board of County Commissioners acting through the Department of Development and Transportation to enforce the provisions of this MANUAL.

1.7. Review and Approval

The County will review all submittals for compliance with this MANUAL. An approval by the County does not relieve the owner, engineer, or designer from responsibility of ensuring that the calculations, plans, specifications and construction are in compliance with the MANUAL and accepted engineering practices.

1.8. Interpretation

In interpretation and application of the provisions of the MANUAL, the following shall govern:

1.8.1. The provisions shall be regarded as the minimum requirements for the protection of public health, safety, comfort, convenience, prosperity, and welfare of the residents of the County.

1.8.2. Whenever a provision of this MANUAL and any other provision of the LDR or any provision in any law, ordinance, resolution, rule, or regulation of any kind, contains any restriction covering any of the same subject matter, whichever restrictions are more restrictive or impose higher standards of requirements shall govern.

1.8.3. This Jefferson County Transportation Design and Construction Manual was adopted by the Board of County Commissioners on March 21, 1995. Any amendments to this MANUAL shall be immediately effective upon its adoption by the Board of County Commissioners. All applications shall be subject to the provisions of this MANUAL that are in effect at the time of the formal application submittal, unless otherwise specified by the Board of County Commissioners resolution.

1.9. Relationship to Other Standards

If the State or Federal Government imposes stricter criteria, standards, or requirements, these shall be incorporated into the County's requirement after due process and public hearings needed to modify the County's regulations and standards.

Chapter 2

Construction Drawing Requirements

2.1. General Requirements

Construction drawings must be submitted in Portable Document Format (PDF) unless otherwise approved for hard copy submittal, to scale, shall be a complete package, which includes all details and documentation necessary for the construction of the proposed improvements. The plans shall be prepared by, or under the direction of a professional engineer, registered in the State of Colorado, and qualified in the field of civil engineering.

The final set of plans (hard copy) for each drawing shall be 24" x 36", unless otherwise approved by the County, and shall contain a title block, sheet number, scale, north arrow, and date.

The developer's engineer shall comply with Colorado Revised Statute 9-1.5-101 through 9-1.5-108 "Excavation Requirements" when the nature of work proposed (1) will involve a contract with Jefferson County (this shall include, but not be limited to binding agreements such as permits and Subdivision Improvement Agreements); (2) will involve primarily Horizontal Construction and not the construction of buildings; (3) will involve excavation that exceeds two (2) feet in depth and that is a contiguous 1,000 square feet, or involve Utility

Boring; and (4) requires the design services of a licensed professional engineer. Existing and Proposed Subsurface Utilities shall be identified on the design plans in accordance with ASCE 38 Standards. For more information please reference the Colorado Revised Statutes and Federal Highway Administration websites.

2.2. Cover Sheet

A cover sheet shall be provided with each submittal which contains the following:

1. A vicinity map at a minimum scale of 1" - 2000' which shows the location and name of all arterial streets/roads within one mile of the proposed development and all streets/roads within the proposed development.
2. A legend, scale, and north arrow.
3. General notes.
4. Index of sheets.
5. Seal, signature, and date of the professional engineer responsible for plan preparation.
6. A permanent benchmark description and location based on USGS datum. At least one permanent benchmark must be established within each subdivision or filing thereof, located on public property.

If a cover sheet is not provided, the above information shall be included on the first sheet of the submittal.

2.3. Plan

The plan view shall include but not be limited to, the following:

1. The scale shall be a minimum of one (1) inch to fifty (50) feet and shown on the plan.
2. Locations and dimensions of existing and proposed improvements, property lines, easements, and Right-of-Way. Plan view limits shall extend 100 linear feet before the Point of Beginning, and 100 linear feet after the Construction End. Each Point of Beginning and Construction End shall be clearly labeled and identified with stationing.
3. Names of streets/roads.
4. Survey line ties to section or quarter corners.
5. Survey lines and centerline stationing. Stationing shall be equated to flowline stationing at horizontal radius curves, cul-de-sacs, and other departures from normal roadway cross sections.
6. Centerline stations for all intersecting roadways and commercial driveways.
7. Existing and proposed street/road improvements (sidewalk, curb, gutter, pavement limits, bridges, culverts, inlets, manholes, asphalt core sample locations, guardrails, curb ramps, etc.). Existing improvements shall be clearly depicted by a dashed line; proposed improvements shall be depicted by a solid line and or greyscale or hatching. Plans shall include existing and proposed limits for asphalt pavement, including areas of milling and overlaying, as well as new asphalt placement. All items shall have a corresponding legend.
8. Curve layout including radius, degree of curve, deflection angle, length of curve, point of curvature, and point of tangency.
9. Elevations and station shall be noted for all curb returns, points of curvature, points of tangency, and high or low points of all vertical curves. The existing and proposed percent cross slope shall be repeated on the plan sheets at select points. Include elevations and cross slopes, existing and proposed, for all lanes of intersection improvements, regardless if construction is planned for opposing streets.
10. Rate of super elevation.
11. Typical template(s) for streets/roads.

12. Match lines and consecutive sheet numbers.

13. Key map.

14. A minimum of one (1) permanent bench mark, based on United States Geological Survey's datum, fully described, within each subdivision or filing thereof.

15. Existing and proposed utilities and structures, including but not limited to: water, fire hydrants, sanitary sewer, storm sewer, telephone, gas, electric, cable television, fiber optic. Existing utility pothole information shall be organized on a separate plan sheet to identify location, depth, utility type, pipe size and material, conflicts with proposed improvements, and other information obtained during subsurface investigation. Subsurface investigation shall include new laterals or service connections to existing main lines and be clearly shown on separate plan sheets. *

16. Stations and critical elevations of all utility and drainage appurtenances. *

17. Construction phasing. *

18. Major Collector and/or Arterial intersection design at a scale of one (1) inch to twenty (20) feet. *

19. Traffic signal design at a scale of one (1) inch to twenty (20) feet. *

20. Signing and Striping Plan.

20. Noise attenuation measures/details. *

21. Trails. *

22. Sediment and erosion control measures/details. *

23. Landscaping. *

*May be included on separate plan sheets.

2.4. Profile

The profile shall include, but not be limited to the following:

1. The scale shall be a minimum of one (1) inch to five (5) feet for street profiles and a minimum of one (1) inch to ten (10) feet for road profiles, and be shown on the plan.

2. Existing (dashed line) and proposed (solid line) grades.

3. Continuous centerline stationing for the entire portion of the existing and proposed roadway shown in the plan. Clearly label centerline stationing for all intersecting roadways and commercial driveways.

4. All design elevations shall be centerline, flowline, back of curb, or lip of gutter.

5. Vertical curve data including length of curve, P.V.C., P.V.T., P.V.I., beginning and end grades. All vertical curves shall be symmetrical.

6. Curb return profiles at a horizontal scale of 1" = 10' and vertical scale of 1" = 1'.

7. All existing curbs, gutters, sidewalks, culverts or storm sewers, ditches and irrigation structures and asphalt adjacent to the proposed design, as well as the same such features that are 100 linear feet before the Point of Beginning and continue for 100 linear feet beyond the Construction End. Basis for existing grades shall be as-built elevations at intervals not to exceed fifty (50) feet. All existing grades, locations and alignments shall be field surveyed by a licensed Professional Land Surveyor for design of the proposed improvements. Previously approved designs are not an acceptable means of establishing existing grades.

8. Separate flowline or top of curb profiles shall be provided for all proposed curb and gutter, including for design of cul-de-sacs and any other departure from a 2% street/road cross slope. In addition, cross-sections at intervals not to exceed 50 feet are required if a departure from a normal cross-slope is proposed.

9. Existing and proposed utilities. *

*May be included on separate plan sheets.

2.5. Cross Sections

1. On widening or matching projects, or as required by the Jefferson County Planning & Zoning, cross sections of the proposed new construction and existing improvements within the Right-of-Way shall be provided at survey stationing at a maximum of fifty foot intervals and at locations of cross culverts. The scale shall correspond to that used on the plan and profile.

2. Cross sections shall identify both the existing or matching percent cross slope of the roadway, as well as percent proposed cross slope.

3. Cross sections shall identify the elevation at the point of match for widening projects for each station interval.

4. Cross sections shall identify the proposed new road segment in gray scale or other hatching.

5. Cross sections shall identify the proposed pavement treatment or alterations, such as mill and overlay of the match point; as well as the proposed new pavement section and respective lifts asphalt.

6. Core samples shall be collected from the existing roadway prior to construction to determine the existing asphalt depth and condition. Such cores shall not exceed 4-inches in diameter and shall be collected at the centerline of the existing road, as well as edge of existing asphalt. The existing depth of asphalt shall be represented on the cross sections.

7. Proposed widening shall avoid cross sections with gross inverts or peaks at the match point. Normal roadway cross sections shall follow AASHTO design criteria that limit the minimum cross slope to 1.5% and maximum cross slope to 3.0%. Cross slope grade change shall note exceed +/- 0.5% as measured every 50 linear feet along the station intervals. There shall be no change in existing cross slope greater than +/- 1.0% from the match point to the proposed edge of asphalt, or the flow line or the lip of the gutter pan.

Refer to Figure 2-1 “Sample Cross Section” below:

Figure 2-1 - Sample Cross Section

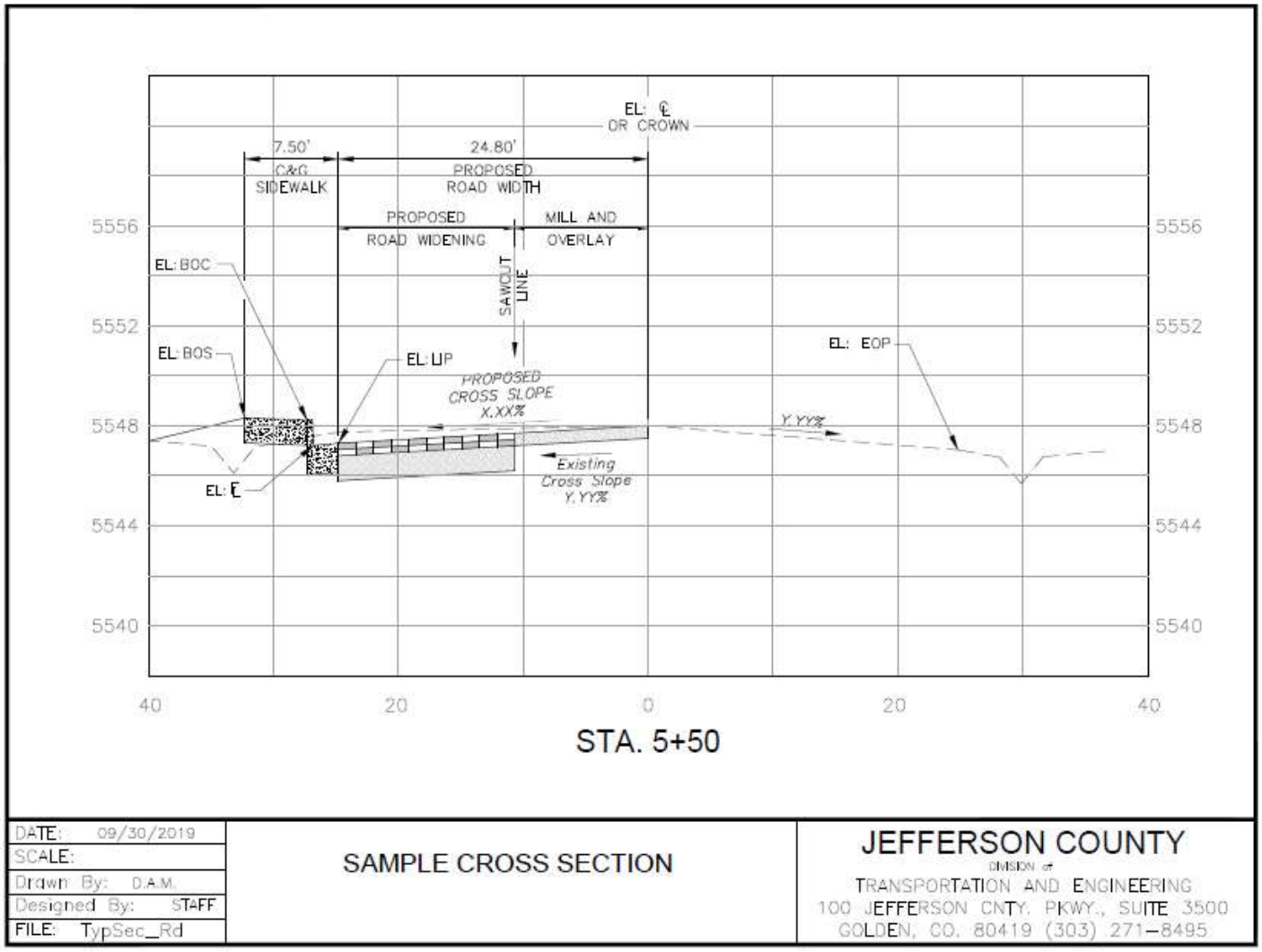

2.6. Details

Jefferson County or CDOT standard details shall be referenced as applicable. Where these standards cannot be used, a separate detail sheet shall be provided with an explanation detailing why these standard details are not being used.

2.7. Standard Notes

The following general notes shall appear on the cover sheet or the first sheet of the plans for all street/road construction plan packages.

1. A Construction Permit from Transportation and Engineering is required prior to commencing work within County Right-of-Way.
2. Any work within State Right-of-Way will require a State Construction Permit.
3. The contractor shall notify Transportation and Engineering at least 24 hours prior to starting construction within the Right-of-Way.
4. The contractor shall provide all signs, barricades, flaggers, lights, or other devices necessary for safe construction traffic control in accordance with the current edition of the MUTCD and as modified by the Colorado Supplement to the MUTCD. A construction traffic control plan shall be submitted to and approved by Transportation and Engineering prior to the issuance of any construction permit for

work within County Right-of-Way.

5. The contractor shall contact the Utility Notification Center of Colorado at least 48 hours prior to construction.

6. Construction specification: Current edition of the Colorado Department of Transportation Standard Specifications for Road and Bridge Construction, special provisions and revisions thereto, and as amended by Chapter 5 of this MANUAL.

7. The subgrade material shall be scarified or removed to a depth required by Jefferson County per information obtained from laboratory tests and/or as required in the Pavement Design Report. Additives or approved material may be required if the native material is unsatisfactory. The subgrade shall be compacted to a minimum density and moisture content range of 2 percent below optimum to 2 percent above as determined in accordance with AASHTO designation T180 or T99 and in accordance with the Standard Specifications Section 203.07.

8. Class 6 aggregate base course for shoulders shall be placed and compacted 95 percent modified Proctor Test (AASHTO T180) after placement of asphalt.

9. Existing asphalt pavement shall be straight sawcut or bladecut when adjoining with new asphalt pavement. SS-1 tack coat shall be applied to all surfaces.

10. Structural section, including subbase and asphalt, shall be constructed according to the Final Pavement design that has been prepared by the developer's engineer, and approved by Transportation and Engineering according to Chapter 4 of this MANUAL. Existing structural section at the match point shall comply with the minimum Full Depth Asphalt thickness identified in Table 4.3 "Minimum Pavement Sections" of this MANUAL for the respective road classification, regardless of the original thickness of asphalt and / or subbase.

The following notes shall appear in addition to the above for all street construction, as applicable:

1. Concrete may be placed by machine methods if all finish lines are within 1/8" + tolerance of the lines shown on the plans. The flowline must be free draining and comply with this MANUAL.

2. One half (1/2) inch expansion joint material shall be installed when abutting any existing concrete or a fixed structure.

3. The contractor is advised to first obtain inspection of forms by Transportation and Engineering before placing concrete curb, gutter, sidewalk, inlets, and/or other concrete drainage structures.

Chapter 3

Design and Technical Criteria

3.1. General

This section sets forth the minimum design and technical criteria to be used in the preparation of all public and private street/road construction plans. All street/road design shall be in accordance with the current edition of AASHTO Geometric Design of Highways and Streets, unless modified herein.

For this regulation, streets shall be used in the Plains and roads shall be used in the Mountains, except as indicated below:

3.1.1 Roads may be allowed in the Plains in locations with slopes greater than 15%, subject to approval by Planning and Zoning.

3.1.2 Streets may be required in the following Mountains locations as directed by Planning and Zoning: 1) Areas where urban development is projected based on Community Plans designations, 2) Areas where curb and gutter would be needed to mitigate drainage impacts.

3.2. Street/Road Types

3.2.1 Public Streets/Roads: Streets or roads that are owned and maintained by the City, County or State for public use.

3.2.2 Private Streets/Roads: Streets or roads that are owned, maintained, or restricted for the use by a person, group of people, or non-governmental entity.

3.2.3 Non-Maintained Streets/Roads in County ROW: Streets or roads that are owned by the County for public use, but are not constructed to a County public standard and are not County maintained.

3.3. Functional Classification

Jefferson County has adopted a Major Thoroughfare Plan based on traffic volumes, existing and/or zoned land use, and anticipated growth. The Major Thoroughfare Plan designates streets/roads as freeway, parkway, principal arterial, minor arterial, major collector, or collector.

3.3.1. Freeway: A freeway serves major regional traffic movements and carries the highest traffic volume of all classifications. A freeway is planned to have four to six through lanes and may have frontage roads. The movement of traffic takes precedence over access. Access is fully controlled and is allowed only to other freeways or to arterials by grade separated interchanges. Opposing movements on a freeway are separated by a raised or depressed median. Pedestrians and bicycle traffic are physically separated from the travel lanes. A freeway may be developed as a parkway with at-grade intersections as a first phase. Freeways are typically in State jurisdiction.

Design Speed: Special Design Required

3.3.2. Parkway: A parkway serves major regional traffic movements and carries high traffic volumes. A parkway is planned to have four to six through lanes. The movement of traffic takes precedence over access. Access is fully controlled and allowed only to major collector classifications or higher. Grade separation at major intersections is preferred over traffic signals. Opposing movements on a parkway are separated by a raised or depressed median. Pedestrians and bicycle traffic are physically separated from the travel lanes unless a bicycle lane or paved shoulder is designated per the Jefferson County Bicycle Plan as amended.

Design Speed: 40 - 50 MPH

3.3.3. Arterial.

3.3.3.1. Principal Arterial: A principal arterial serves major regional traffic movements and carries high traffic volumes. A principal arterial is planned to have four to six through lanes in the Plains and four through lanes in the Mountains. The movement of traffic takes precedence over access. Access is controlled and allowed to collectors and higher class facilities is preferred, but some restricted access to major developments may be allowed. Opposing movements are usually separated by a raised, depressed, or painted median. Pedestrians and bicycle traffic may be carried on detached walks and trails unless a bicycle lane or paved shoulder is designated per the Jefferson County Bicycle Plan as amended.

Design Speed: 35 - 45 MPH

3.3.3.2. Minor Arterial: A minor arterial serves intracommunity traffic and carries moderate traffic volumes. Minor arterials are planned to have four lanes in the Plains. In the Mountains, minor arterials are planned to have two lanes, plus turn lanes and passing or climbing lanes where warranted. Neither the movement of traffic nor access takes precedence. Reasonable access is allowed except for private residential driveways. Opposing movements are generally separated by a raised, depressed, or painted median in the Plains. Pedestrians and bicycle traffic are usually carried on a detached walk or an adjacent trail unless a bicycle lane or paved shoulder is designated per the Jefferson County Bicycle and Pedestrian Plan, as amended.

Design Speed: 30 - 40 MPH

3.3.4. Major Collector: A major collector serves intracommunity traffic and carries moderate traffic volumes. Major collectors are planned to have two lanes, plus turn lanes where warranted, in the Plains and the Mountains. Neither the movement of traffic nor access takes precedence. Reasonable access is allowed except for private residential driveways. Opposing movements are generally

separated by a median/turn lane. Pedestrians and bicycle traffic are usually carried on a detached walk or an adjacent trail unless a bicycle lane or paved shoulder is designated per the Jefferson County Bicycle and Pedestrian Plan, as amended.

Design Speed: 30 - 40MPH

3.3.5. Collector: A collector serves neighborhood traffic movements over short distances, generally accessing arterials and major collectors. A collector has two lanes, plus turn lanes where warranted, in the Plains and two lanes in the Mountains. Access takes precedence over the movement of traffic. Reasonable access for streets is allowed except for private residential driveways. Opposing movements are not physically separated. Pedestrian traffic is handled on attached or detached sidewalks in the Plains. No special accommodation is made for bicycle traffic.

Design Speed: 25 - 30 MPH

3.3.5. Local: A local street or road serves neighborhood traffic over very short distances to higher class roadways. A local street or road has two travel lanes. It is always paved in the Plains and usually paved in the Mountains. Access to adjacent land is its primary purpose. All types of access are allowed. Opposing movements are not physically separated. Pedestrian traffic is handled on attached or detached sidewalks in the Plains. No special accommodation is made for bicycle traffic.

Design Speed: 15 - 25 MPH

3.4. Standard Templates

The following templates reflect the minimum section for each street/road classification and for cul-de-sacs. Any additional requirements including, but not limited to, acceleration/deceleration lanes and left turn lanes are not shown.

Template Number	Description	Typical Volume Range in Average Daily Traffic (ADT)	Right-of-Way Width (Feet)
Public Street/Road Templates			
1	Principal Arterial Street	Greater than 25,000	130’
2	Minor Arterial Street	15,000 to 25,000	100’
3	Major Collector Street	8,000 to 15,000	84’
4	Collector Street (36’ FL to FL) with Attached Sidewalks	1,000 to 8,000	50’
5	Collector Street (36’ FL to FL) with Detached Sidewalks	1,000 to 8,000	37’ + 20’ minimum easement for sidewalks, maintenance and traffic signs
6	Local Street (34’ FL to FL) with Attached Sidewalks	Less than 1,000	50’
7	Local Street (34’ FL to FL) with Detached Sidewalks	Less than 1,000	35’ + 20’ minimum easement for sidewalks, maintenance and traffic signs
8	Local Street (28’ FL to FL) with Attached Sidewalks	Less than 350	45’
9	Local Street (28’ FL to FL) with Detached Sidewalks	Less than 350	30’ + 18’ minimum easement for sidewalks, maintenance and traffic signs

Template Number	Description	Typical Volume Range in Average Daily Traffic (ADT)	Right-of-Way Width (Feet)
Public Street/Road Templates			
10	Minor Arterial Road	Greater than 8,000	70’
11	Major Collector Road	2,000 to 8,000	50', 60' for turn lanes
12	Collector Road	1,000 to 2,000	50’
13	Local Road	Less than 1,000	50’
14	Street Cul-de-sac – Option 1 Street Cul-de-sac – Option 2 Street Cul-de-sac – Option 3		90’ 100’ 112’
15	Partial Cul-de-sac for Local Streets		45’
16	Offset Cul-de-sac for Local Streets – Option 1 Offset Cul-de-sac for Local Streets – Option 2 Offset Cul-de-sac for Local Streets – Option 3		90’ 100’ 112’
17	Cul-de-sac for Local Roads		90’
Driveway, private street/road templates and Non-maintained streets/roads in County ROW templates (see section 3.7.8) *			
18a	Driveway		14’- 16’
18b	Private Road		14’-24’
18c	Private Street with Curb and Gutter		14’-24’
18d	Private Street with Streetside Ditch		14’-24’
19	Pull Out for Private Road		
20	Hammerhead Turnaround for Driveway/Private Road		varies
21	Hammerhead Turnaround for Private Street		varies

** The "non-maintained streets/roads in County ROW" templates can only be used if the following provisions apply:*

1. *The County is not holding a guarantee for a previous development process that would require the construction of a County public standard street/road in the ROW.*
2. *The County does not wish to have the street/road constructed to a County public standard.*
3. *The street/road is not identified on the Jefferson County Major Thoroughfare Plan.*

3.5. Horizontal Alignment

3.5.1. Horizontal Curves: The design of roadway curves should be based on an appropriate relationship between design speed and curvature and on their joint relationships with superelevation (roadway banking) and side friction. Although these relationships stem from the laws of mechanics, the actual values for use in design depend on practical limits and factors determined more or less

empirically, and the most recent edition of AASHTO Policy on Geometric Design of Highway & Streets (the Green Book) Chapter 3 should be referenced for designing appropriate horizontal curves.

3.5.2. Super Elevation: Super elevation is required for curves on all principal and minor arterial streets/roads and selected collector streets/roads. Minimum horizontal curve radius, rate of super elevation, and lengths of tangent runout and super elevation runoff shall be in accordance with the recommendations of the current edition of AASHTO Policy on Geometric Design of Highways and Streets.

Super elevation shall not be used on local streets, but may be used on local roads.

3.5.3. Sight Distance: Horizontal alignment must provide at least the minimum stopping sight distance for the design speed at all points. This includes visibility at intersections, as well as around curves and roadside encroachments. Where an object off the traveled surface restricts sight distance, the minimum radius of curvature is determined by the stopping sight distance. A likely obstruction may be a bridge abutment, retaining wall, cut slope, landscaping, or side or corner of a building. In considering sight distance, it shall be assumed a 6'-0" fence (as measured from finished grade) exists along all property lines except in the sight distance triangles required at all intersections. Minimum stopping sight distance (measured from the centerline of the inside lane) shall follow AASHTO Policy on Geometric Design of Highways & Streets (The Green Book) Chapter 3.

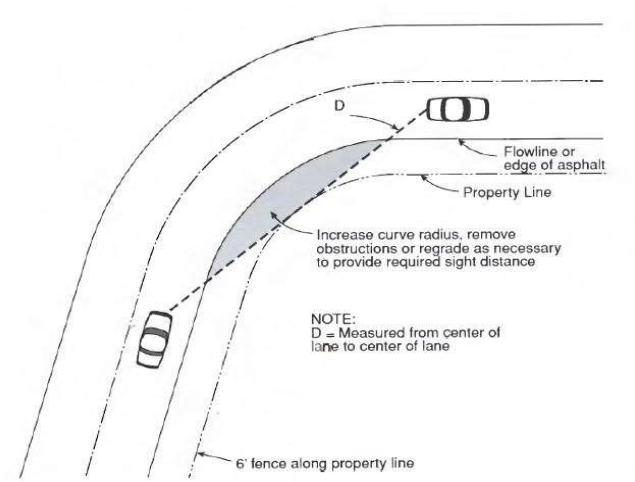

3.6. Vertical Alignment

3.6.1. Grades: The minimum grade for all new streets and roads is 2%, except within a sag. A minimum flowline grade of 1.5% shall be maintained around all full and partial cul-de-sac bulbs, except within a sag. Planning and Zoning may approve grades as low as 1% if existing conditions make it infeasible to construct a minimum of 1.5%. The maximum grade for all public streets is 6.0% and for public roads is 8.0%. The maximum grade for public roads may be increased to 10% where the dip of the natural terrain bears between South 60° East and South 45° West.

3.6.2. Intersection Grades: The maximum grade at intersections shall be in accordance with the following figure and table. Grades and lengths apply to the street/road controlled by a stop sign. At signalized and uncontrolled intersections, grades and lengths apply to all legs of the intersection.

	Through Street / Road		
Intersection Street/Road	Local	Collector	Major Collector/Arterial
Local	50' @ 4%	100' @ 4%	100' @ 4%
Collector	-	100' @ 3%	200' @ 2%
Major Collector/Arterial	-	-	200' @ 2%

3.6.3. Changing Grades. Continuous grade changes shall not be permitted. The use of grade breaks in lieu of vertical curves is discouraged; however, if a grade break is necessary and the algebraic difference in grade (A) does not exceed four-tenths (0.40) of a percent along the street/road, the grade break will be permitted.

The maximum grade break allowed at the point of tangency at a curb return for local and collector streets shall be two (2) percent and a maximum of one (1) percent for arterial streets.

3.6.4. Vertical Curves. All vertical curves shall be symmetrical. A vertical curve shall be used when the algebraic difference in grade (A) equals or is greater than four-tenths (0.40) of a percent. The minimum grade within a sag (sump) vertical curve is five-tenths (0.50) of a percent. All vertical curves shall be labeled, in the profile with curve length (L) and K value (= L/A). Vertical Curve requirements shall apply to all public and private streets, roads and driveways. The minimum K values for crest and sag vertical curves shall be in accordance with the current edition of AASHTO Policy on Geometric Design of Highways & Streets (The Green Book) Chapter 3.

3.6.5. Connection with Existing Streets/Roads

3.6.5.1. Connection with existing roadways shall be smooth transitions conforming to normal vertical curve criteria (see Section 3.6.4. of these standards) if the algebraic difference in grade (A) between the existing and proposed grade exceeds four-tenths (0.40) of a percent. When a vertical curve is used to make this transition, it shall be fully accomplished prior to the connection with the existing improvement, and comply with the grade requirements at intersection approaches.

3.6.5.2. Existing grade shall be shown for at least three hundred (300) feet with field verified as-builts showing stations and elevations at twenty-five (25) foot intervals. In the case of connection with an existing intersection, these as-builts are to be shown within a three hundred (300) foot radius of the intersection. This information will be included in the plan and profile that show the proposed roadway.

3.6.5.3. Previously approved designs for the existing improvement are not an acceptable means of establishing existing grades; however, they are to be referenced on the construction plan where they occur.

3.6.5.4. The basis of the as-built elevations shall be the same as the design elevations (both flowline or top of curb, etc.) unless otherwise approved by Planning and Zoning.

3.7. Intersection Spacing, Vision Clearance Triangle and Sight Distance for Streets, Roads and Driveways

3.7.1. Intersection Spacing: Spacing of intersections (measured centerline to centerline) shall be in accordance with the following table and the graphic below:

Proposed Street/Road: Existing Street/Road	Minimum Separation (feet)
Local: Local or Collector	175
Local: Arterial or Major Collector	500
Collector: Collector	230
Collector: Major Collector	660
Collector: Arterial or higher	1000
Major Collector: Major Collector	1000
Major Collector: Arterial or higher	1320
Arterial: Arterial or higher	5,280’

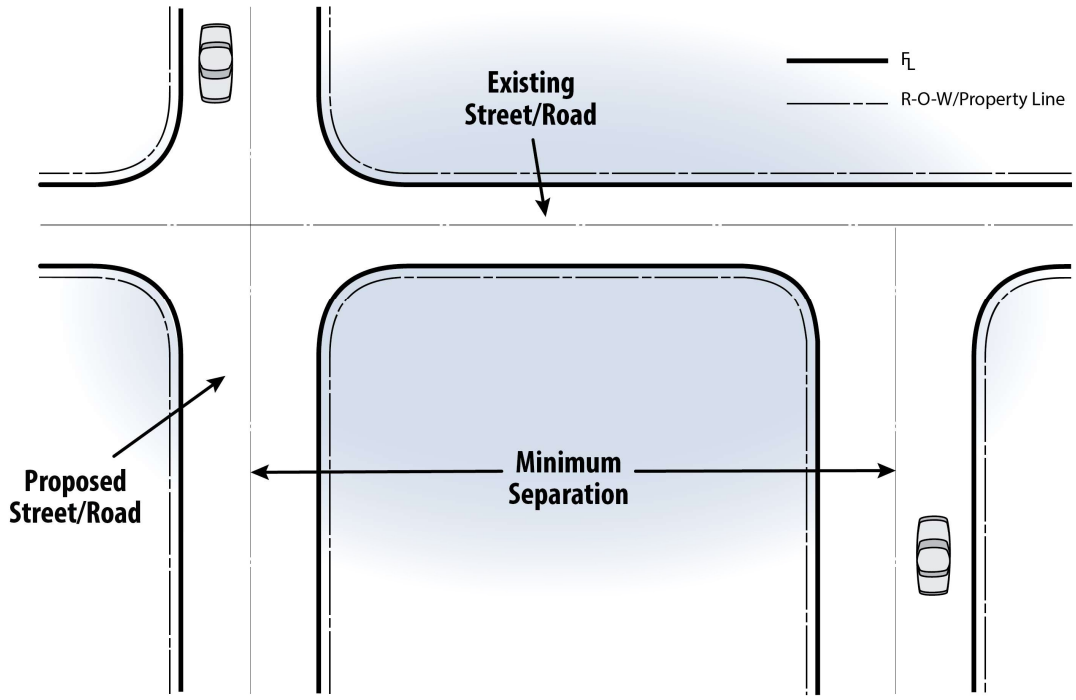

3.7.2. Vision Clearance Triangle: The table below shows where a vision clearance triangle must be provided.

Required	Not Required
Street/Road Intersections	Intersection of internal drive isles in non-residential*
Intersections of non-residential driveways with streets/roads	Multi-family and townhome developments*
Intersections of multifamily and/or townhome residential drive isles with streets/roads	
Intersections of street/roads and railroad Right-of-Way	

** Layout of these types of developments should not impede a driver's ability to see on-coming vehicles and pedestrians at intersections*

As illustrated below, the vision clearance triangle must provide an unobstructed view across the triangle formed by the Right-of-Way/property line or easement line adjacent to a street or road as illustrated. The vision clearance triangle may also be formed by the flowline adjacent to a street or road as illustrated below subject to approval by Planning and Zoning. The approval of the vision clearance triangle formed by a flowline is predicated on a fully built-out street or road and existing Right-of-Way that exceeds the Right-of-Way requirements in the Land Development Regulation. Within the area of the triangle, there shall be no fence, wall, landscaping, structure or other obstruction to view more than forty-two (42) inches in height (measured from the flowline or edge of pavement on the street/road surface). The allowable height of forty-two (42) inches is determined by measuring from the flowline or edge of pavement, as applicable. For example, the grade on a lot within the triangle is 12'' higher than the flow line of a gutter, the allowable height of landscaping would be 30" on the property.

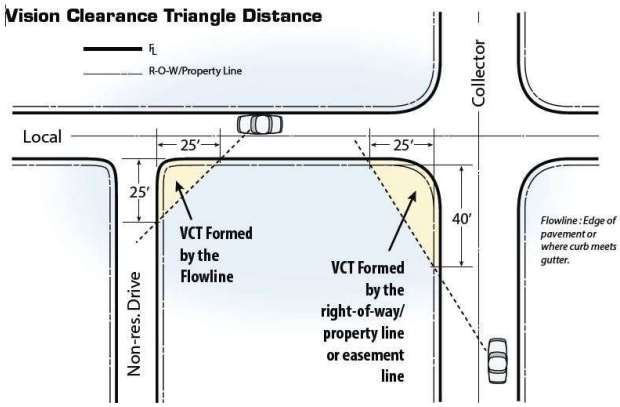

Street/Road Classification	Required Distance from Intersection
Non-residential drive	25'
Local	25'
Collector	40'
Major Collector/Arterial/Parkway	55'
Railroad Right-of-Way	55'

Note that if there is any conflict between this provision (3.7.2) and the Sight Distance provision (3.7.2.1) of this MANUAL, the Sight Distance provision shall take precedence. Note that if a physical median exists or is proposed at an access point restricting or eliminating a conflict point, the Vision Clearance Triangle requirements will not apply where no conflict points exist. See graphic below for a comparison between Sight Distance and the Vision Clearance Triangle.

Comparison between Sight Distance and the Vision Clearance Triangle

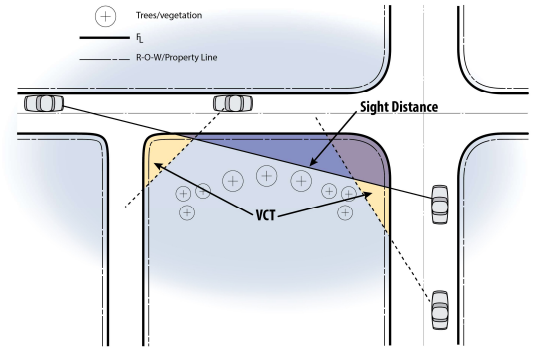

3.7.2.1. Sight Distance: At any street/road intersections or multifamily residential, commercial and industrial site driveways, an unobstructed view as defined above must be provided across the area formed by the flowline or edge of pavement on one street/road and the flowline or edge of pavement of the intersecting street/road (or edge of driveway) and lines (labeled d1 or d2 on the Sight Distance figure) connecting them at ten (10) feet from their point of intersection. This area will be used to ensure that drivers of vehicles exiting from the stopped approach have the minimum required sight distance available. Minimum Sight Distance requirements for all

intersection types must follow the provisions covered in the current edition of AASHTO Policy on Geometric Design of Highways & Streets (The Green Book) Chapter 9.

Minimum Sight Distance Requirements

d1 Left sight distance measured from the driver's eye ten feet back of the flowline or pavement edge to the vehicle approaching in the outside lane.

d2 Right sight distance measured from the driver's eye ten feet back of the flowline or pavement edge to the vehicle approaching in the median lane.

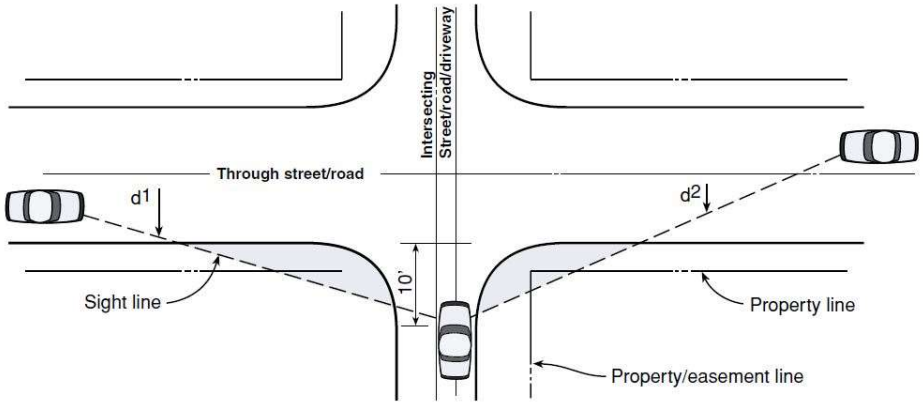

1. Requirements assume that the vehicle is stopped on the proposed public or private street/road or driveway.
2. Requirements are based on a 3.5-foot driver eye height in the stopped vehicle and a 4.25-foot height of the approaching vehicle.
3. The operating speed of the approaching vehicle is assumed to be the posted speed limit.

4. Truck traffic (WB30 or larger) entering onto streets/roads requires longer sight distances and the current edition of AASHTO Policy on Geometric Design of Highway & Streets Chapter 9 shall be referenced for the appropriate adjustment. Any proposed public or private street/road or driveway regularly used by truck traffic will require this analysis.

5. When the criteria for sight distances cannot be met, the County may deny the access, prohibit left turns by vehicles entering the street/road or require speed change lanes.

3.7.3. Right Turn Lanes

3.7.3.1. Right Turn Acceleration Lanes: Right turn acceleration lanes may be required based on an approved transportation study. Right turn acceleration lanes may also be required where necessary for public safety and traffic operations based upon site specific conditions, as determined by Planning and Zoning.

3.7.3.2. Right Turn Deceleration Lanes: Right turn deceleration lanes are required at arterial and major collector street/road intersections and at driveways on arterial streets/ roads as needed based on required transportation study/analysis. Transportation study/analysis shall address storage, as applicable. Right turn deceleration lanes may also be required where necessary for public safety and traffic operations based upon site specific conditions, as determined by Planning and Zoning.

3.7.3.3. If the proposed street/road intersection or driveway is within two different speed zones, the criteria for the higher speed zone apply.

3.7.3.4. Where there are three or more through lanes in the direction of travel, right turn acceleration and deceleration lanes will be required only when determined necessary by Planning and Zoning due to high traffic volume or other site specific safety considerations.

3.7.3.5. Taper and lane lengths shall be in accordance with the following criteria after an engineering analysis shows conditions without any extenuating factors or alternative needs. All taper length and lane length alterations must be accordance with the provisions set

forward by the latest editions of the current edition of AASHTO Policy on Geometric Design of Highways & Streets and the Manual on Uniform Traffic Control Devices.

Deceleration Right Turn Lanes

Design Speed (M.P.H.)	Taper Length (For 11' Lane Width)	Lane Length	Total Length* (Taper Length + Lane Length)
25	80'	120'	200'
30	100'	150'	250'
35	120'	190'	310'
40	140'	230'	370'
45	160'	280'	440'
50	180'	320'	500'

**At signalized intersections, where storage is needed for right-turning vehicles, additional length shall be provided to accommodate the average number of vehicles anticipated.*

Acceleration Right turn Lanes

Design Speed (M.P.H.)	Taper Length (For 11' Lane Width)	Lane Length	Total Length (Taper Length + Lane Length)
30	120'	190'	310'
35	120'	270'	390'
40	180'	380'	560'
45	180'	550'	730'
50	240'	760'	1000'

3.7.3.6. A continuous accel/decel lane may be required if the acceleration lane for one access and the deceleration lane for another access overlap or are in close proximity to each other.

3.7.3.7. The minimum pavement width for acceleration and deceleration lanes shall be eleven (11) feet, excluding gutter pan or shoulder.

3.7.3.8. Grade correction factors are required where street/road grades are steeper than three (3) percent.

3.7.4. Left-Turn Lanes: Left-turn lanes are required at all arterial and major collector street/road intersections and at driveways on major collector/arterial streets/roads. Design of left-turn lanes shall be in accordance with the following criteria.

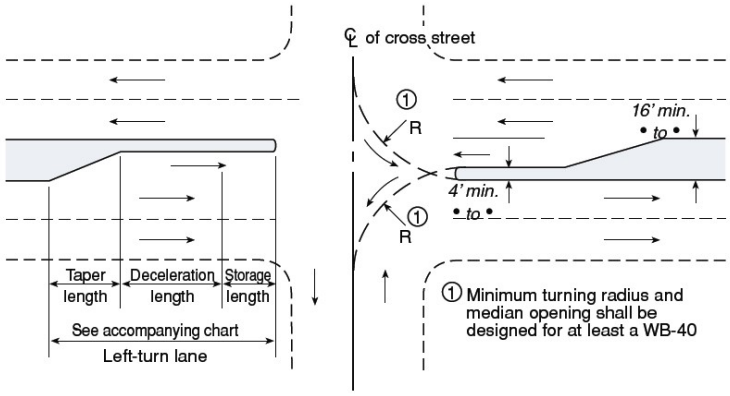

Left-Turn Lanes

Design Speed (M.P.H.)	Taper Length (For 11' Lane Width)	Decel Length	Total Length
30	100'	150'	*250'
40	140'	230'	*370'
45	160'	280'	*440'
50	180'	320'	*500'

**Plus storage length*

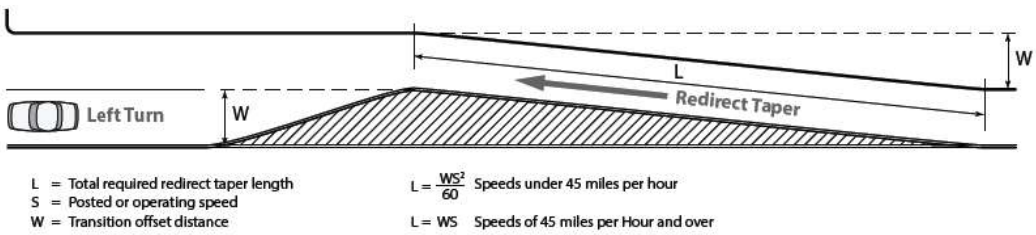

3.7.4.1. Storage Lengths: Storage lengths for signalized and unsignalized intersections shall be determined by an approved transportation analysis or transportation study, as applicable.

3.7.4.2. Median Design: Other left-turn median designs such as reverse curve taper, offset approach nose and double left-turn lanes must be approved by Planning and Zoning and shall conform to AASHTO standards.

3.7.5. Curb Returns

3.7.5.1. The table below provides the minimum street/road intersection radii measured to flowline or edge of pavement where no curb and gutter is required.

Curb Return Radii (R) To Flowline

Intersecting Street	Principal Arterial	Minor Arterial	Major Collector	Collector	Local
Principal Arterial	Special Design*	Special Design*	40'	40'	30'
Minor Arterial	Special Design*	Special Design*	30'	30'	25'
Major Collector	40'	30'	30'	30'	25'
Collector	40'	30'	30'	25'	20'
Local	30'	25'	25'	20'	20'/15'

**Special Design should provide consideration for right turn channelization.*

3.7.5.1.1. At driveway locations where curb returns are used, the minimum radii allowed on arterials and major collectors shall be twenty-five (25) feet.

3.7.5.1.2. At driveway or private access locations where there is no curb and gutter, the minimum radii (measured to edge of pavement) allowed on arterials and major collectors shall be twenty-five (25).

3.7.5.2. The minimum elevation difference (fall) around curb returns (PCR to PCR) for flow along the curb line shall be as follows:

Radius	Minimum Fall
15’	0.3’
20’	0.4’
25’	0.5’
All Others	1.27% of length from PCR to PCR

3.7.5.3. The maximum fall around curb returns shall be equal to the steepest grade coming into or out of the return multiplied by the return length, + 0.2 feet.

3.7.5.4. Curb Return Profiles: Curb return profiles are required for radii equal to or greater than thirty (30) feet within the public Right-of-Way. A midpoint elevation along the arc length of the curb return shall be shown in plan view for radii equal to or greater than twenty-five (25) feet. Curb return design shall be set in accordance with the following design procedure. General standards for flowline control and profiles within the curb returns shall be as follows:

3.7.5.4.1. The point of tangency at each curb return shall be determined by the projected tangent grade beginning at the point of intersection (P.I.) of the flowlines.

3.7.5.4.2. The arc length and external distance of the curb return shall be computed and indicated on the drawing.

3.7.5.4.3. Show the corresponding flowline (or top of curb) grade for each roadway beyond the P.C.R.

3.7.5.4.4. Design of the curb return flowline shall be such that the maximum cross slope between the midpoint of the curve and the PICR (external distance) does not exceed +5 percent. Grade breaks at the PCR’s will not exceed two (2) percent for local and collector streets and one (1) percent for arterials. The flowline design of the curb return will be accomplished within the return without affecting street grades beyond the PCR. Maximum vertical curves will equal the arc length of the curb return. The elevation and location of the high or low point within the return, if applicable, is to be called out in the profile.

3.7.5.4.5. Scale for the curb return profile is 1” = 10’ horizontally and 1” = 1’ vertically. See Section 2.4.6.

3.7.6. Driveway Spacing

Opposing and adjacent driveway locations shall be in accordance with the following figure and table. The minimum spacing shall be increased as necessary to accommodate left turn storage bays. Offset of opposing driveway locations is not required if driveways are physically constrained to right-in, right-out.

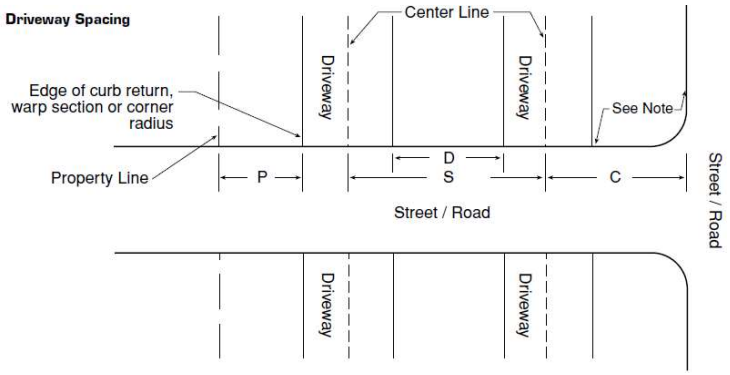

NOTE: Flowline of curb/gutter or edge of asphalt if curb/gutter does not exist or edge of shoulder if asphalt does not exist.

	Figure Reference	Distance
Residential Driveways		
From property lines	P	0’
From streets/roads	C	30’
Between driveways		
On local streets/roads	D	10’
On collector streets/roads	S	80’***
On major collector/arterial streets/roads	S	325’
Non-Residential Driveways on Locals/Collectors		
From property lines	P	0’
From major collectors/arterial streets/roads	C	300’ *
From collector streets/roads	C	200’ *
From local streets/roads	C	125’
Between driveways		
30 MPH design speed	S	180’
35 MPH design speed	S	200’
Non-Residential Driveways on Major Collectors/Arterials/Parkways		
From property lines	P	0’
From streets/roads	C	500’ **
Between driveways		
40 MPH design speed	S	275’
45 MPH design speed	S	325’

** The C dimension may be reduced if approved by Planning & Zoning Division due to the existence of limiting factors. The minimum distance shall be no less than 150 feet.*

*** If the proposed driveway is restricted to right turn movements or if it is not aligned with an existing or planned left turn lane, the C dimension may be reduced if approved by Planning & Zoning Division due to the existence of limiting factors. If signalization is proposed, the minimum C distance shall be increased to 660 feet.*

****May be reduced for circular driveways or driveways with a standard hammerhead turnaround If approved by Planning and Zoning.*

3.7.7. Channelizing Islands The following figures illustrate the minimum design for channelizing islands for site accesses with various turn movement restrictions.

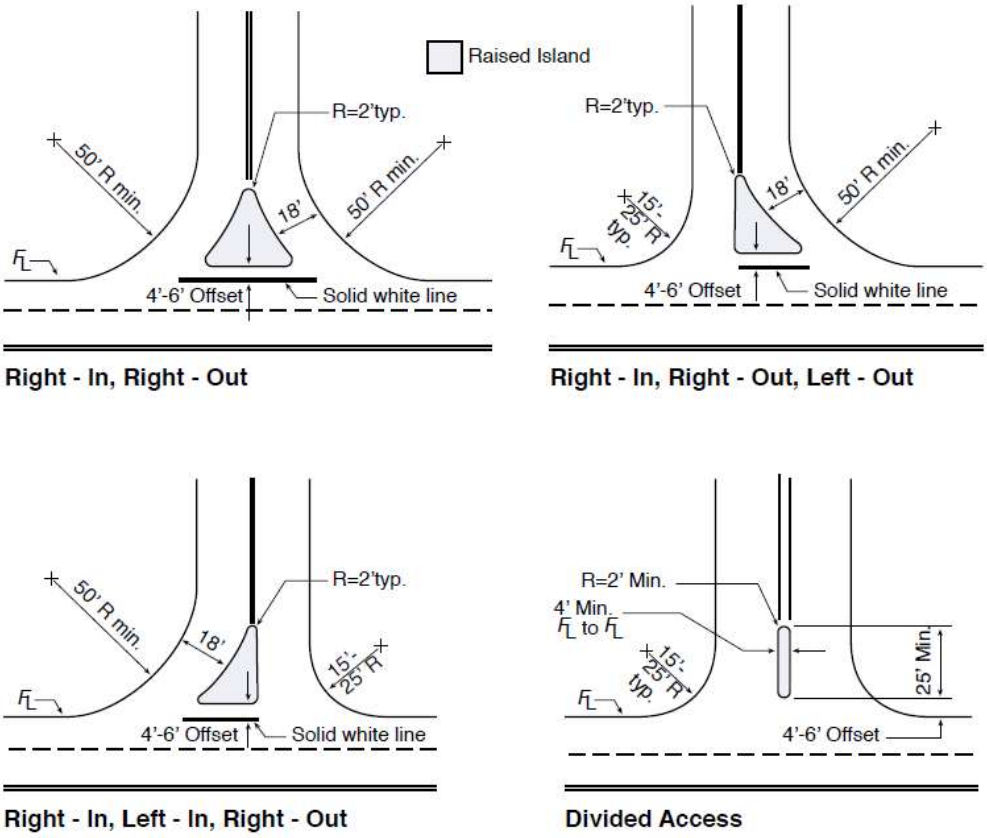

3.7.7.1. Non-rigid post mounted delineators are required on raised islands.

3.7.7.2. Curb ramps four (4) feet wide, with a maximum slope of 12:1, are required and shall be shown on the plans.

3.7.8. Non-Maintained Roads in County Right-of-Way, Driveways, and Private Street/Road Standards.

3.7.8.1. Driveways serving one dwelling unit shall meet the following standards (Template 18a):

Exception: If the length of the driveway in the Plains is less than or equal to 50 feet, Sections 3.7.8.1.1. through 3.7.8.1.4. do not apply.

3.7.8.1.1. Curve Radius: Minimum horizontal curve radius of 30 feet at centerline or as required by the applicable fire protection district.

3.7.8.1.2. Width: A total width of 14 feet, including a 10-foot all-weather travel surface and two-foot shoulders on either side in accordance with Template 18a.

If the length of the driveway in the Mountains exceeds 500 feet, and is a total width of 14 feet, including a 10-foot all-weather travel surface and two-foot shoulders on either side, then pullouts shall be required at 200-foot intervals in accordance with Template 19. Due to site constraints, this 200-foot interval could be modified by 50 feet in either direction. Alternatively, if pullouts are not desired, a total width of 16 ft, including a 12-foot all-weather travel surface and two-foot shoulders on either side is required.

3.7.8.1.3. Grade: Maximum grade of ten (10) percent on straight sections. Maximum grade of eight (8) percent for curves with radius of less than or equal to 50 feet at centerline.

Exception: In the Mountains, a maximum grade of fifteen (15) percent on straight sections for a maximum length of one hundred (100) feet is allowed provided the appropriate fire sprinkler systems are installed per the National Fire Protection Association (NFPA) 13D or International Residential Code (IRC) P2904 - Standards for the Installation of Sprinkler Systems in One- and Two-Family Dwellings and Manufactured Homes. There may be more than one section up to 15% provided they are separated by a distance of 1000 feet. This

spacing may be reduced to 300 feet provided a pullout in accordance with this Manual is provided in a break between sections. This pullout is required regardless of the road width.

3.7.8.1.4. Turnaround: If the length of the driveway exceeds 150 feet, a hammerhead turnaround shall be provided in accordance with Template 20. The centerline of the turnaround shall be located a minimum distance away from the structure. The minimum distance equals 1.5 times the height of the structure. Building height is measured as the distance between the average point between grade and the average point of the roof.

3.7.8.2. Private streets/roads serving more than one dwelling unit and non-maintained streets/roads in county Right of Way shall meet the following standards (Templates 18b, 18c, and 18d):

3.7.8.2.1. Curve Radius: Minimum horizontal curve radius of 30 feet at centerline or as required by the applicable fire protection district.

3.7.8.2.2. Width (For a street/road serving up to 15 dwelling units): A total width of 20 feet, including a 16-foot all-weather travel surface and two-foot shoulders on either side in accordance with Templates 18b, 18c or 18d. Alternatively, if a total width of 16 feet, including a 12-foot travel surface and two-foot shoulders on either side is proposed, then pullouts at 200 foot intervals in accordance with Template 19 are required. Due to site constraints, this 200 foot interval could be modified by 50 feet in either direction.

3.7.8.2.2.1. Width (For a street/road serving 16 or more dwelling units or one or more non-residential units): A total width of 24 feet, including an 18-foot paved surface (plains) or all-weather surface (mountains) and three-foot shoulders on either side is required in accordance with Templates 18b, 18c, or 18d.

3.7.8.2.3. Grade: Maximum grade of ten percent on straight sections. Maximum 12 percent grade where the dip of the natural terrain bears between South 60° East and South 45° West. Maximum grade of eight percent for curves with radius of less than or equal to 50 feet at centerline.

3.7.8.3. Non-Compliant Driveways/Private Streets/Roads:

If the proposed or existing driveway or private street/road cannot meet the requirements of this section, the following shall be submitted to Planning and Zoning through a relief request:

1) A signed and stamped letter/statement by a qualified Colorado-registered professional engineer indicating:

- The existing and/or proposed conditions,
- The conditions that do not meet requirements, and documentation of why the requirements cannot be met,
- Any offsite improvements that can and will be completed,
- That the existing or proposed driveway or private street/road will be able to serve the residence under normal and expected conditions and that the existing and/or proposed design is satisfactory,
- That the material and method of work offered adequately meets the intent of this section and the minimum prescriptive requirements of the applicable International Fire Code (IFC) 104.9, and
- This statement shall include a detailed explanation of how an emergency apparatus within the appropriate fire protection district will be able to serve the residence under normal and expected conditions. This analysis may include auto-turn or turning radius templates. Such statement shall bear the professional engineer's seal, signature and date.

2) Plan and profile showing the existing conditions and proposed design, and

3) A written statement from the property owner that a fire sprinkler system will be installed per National Fire Protection Association (NFPA) 13D or International Residential Code (IRC) P2904 at the time of Building Permit.

4) Affidavit, signed by the property owner and recorded with the County stating that the property owner acknowledges that the driveway or street/road as proposed does not meet the requirements of the Transportation Design and Construction Manual and as a result, emergency services may be impacted. This form shall be provided by the County.

These submittal documents will be required to be reviewed and approved by Planning and Zoning prior to issuance of a building permit. Planning and Zoning may consult directly with the appropriate fire protection district when evaluating driveways or private streets/roads which cannot meet the requirements of this section.

Prior to closeout of the land disturbance permit, as-built drawings are required.

Note: This section applies to on or offsite private driveways/streets/roads on private land and within non-maintained County Right-of-Way or platted Right-of-Way. This shall not apply to County maintained Right-of-Way.

3.7.8.4. Driveway approaches and private road intersections with public roads must comply with Standard 8 - Driveway and Private Road Approaches onto Roads.

3.7.8.5. Cattle guards shall conform to the current edition of the CDOT M&S Standard Plans and approved by the appropriate fire protection district.

3.7.8.6. All gates and entry-way structures shall be approved by the appropriate fire protection district.

3.7.8.7. All streets in the Plains are required to be paved.

3.7.8.8. All rules and regulations of the applicable fire protection district shall govern unless less restrictive than the requirements of this Manual.

3.7.8.9 All culverts, bridges and other conveying structures shall meet loading requirements for the heaviest fire apparatus potentially serving the residence(s). Maximum capacity of any bridge or culvert with a span larger than 4 feet shall be posted on signs at both approaches for through roads and at the entrance for cul-de-sacs.

3.8. Drainage

All storm drainage systems shall be designed in accordance with Jefferson County Storm Drainage Design and Technical Criteria (JCSDDTC). Safe and efficient conveyance of traffic is the primary function of streets/roads; therefore, design of the storm drainage function shall not exceed the limits (such as gutter capacity and street overtopping) set forth in the JCSDDTC. All new or repaired storm sewer pipe and associated structures within County Right-of-Way and/or easements shall be constructed with trace wire and test locations. Installation shall be tested for operation and documented with Form Letter "T", in accordance with Jefferson County Land Development Regulation Section 33.

3.8.1. Crosspans: Crosspans are not permitted across collector or arterial streets, nor are they allowed on streets with existing storm sewer systems. Crosspans may be used parallel to collector or arterial streets to convey storm runoff across local streets.

3.8.2. Inlets: Inlets shall be located to intercept gutter flow at the point gutter capacity is exceeded by the storm runoff (see Chapter 9 of the JCSDDTC for gutter capacity). Inlets shall also be installed to intercept cross-pavement flows at points of transition in superelevation. Due to the presence of curb ramps at intersections, inlets are not allowed within the curb return, but shall be located at the tangent points of the curb return.

3.8.3. Cross Slope: Except at intersections, or where superelevation is required, streets/roads shall be level from top of curb to top of curb (or flowline to flowline) and shall have a two (2) percent crown. At or within 150’ of an intersection, the maximum elevation difference between flowlines is that dictated by the intersection grade (Section 3.5.2.) and the actual distance between flowlines.

3.8.3.1. Parabolic or curved crowns are not allowed. In no case shall the pavement cross slope at warped intersections exceed the grade of the through street.

3.8.3.2. Carrying the crown at a side street into the through street is permitted only when drainage considerations warrant such a design.

3.8.3.3. The rate of change in pavement cross slope, when warping side streets at intersections, shall not exceed one (1) percent every

twenty-five (25) feet horizontally on local streets/roads, one (1) percent every thirty-seven and one-half (37.5) feet horizontally on collector streets/roads, or one (1) percent every fifty-six and one-half (56.5) feet horizontally on arterial streets/roads.

3.8.4. Temporary Erosion Control: Temporary erosion control is required along and at the ends of all roadways that are not completed due to project phasing, subdivision boundaries, etc., in accordance with the Jefferson County Zoning Resolution, Section 15.

3.8.5. Cross Culverts: Cross culverts shall be installed at locations where roads cross natural drainageways and/or where changes in road grade are greater than two (2) percent. The culvert slope shall match as nearly as possible that of the existing topography, but shall in no case be less than one (1.0) percent. Cross culverts for roads shall be spaced a maximum of five hundred (500) feet apart.

3.9. Traffic Control

3.9.1. Construction Traffic Control: Traffic safety in construction zones should be an integral element of every project from planning through design and construction. Pedestrian, as well as vehicular traffic, should be considered in the design of a traffic control plan. A traffic control plan shall be submitted to and approved by Transportation and Engineering prior to issuance of a construction permit.

Design of all traffic control plans shall be in accordance with Part VI of the Manual on Uniform Traffic Control Devices, Standards for Work Zone Traffic Control. All necessary signs, pavement markings, barricades, etc. shall be shown on the plan.

3.9.2. Traffic Signals: Traffic signals shall be installed at street/road intersections or site accesses identified as meeting warrants in the traffic study submitted for a proposed development. If the proposed signal location is within twelve hundred (1,200) feet of any adjacent signal, a two-way progression analysis shall be included in the traffic study.

Design of all traffic signals shall be in accordance with the Manual on Uniform Traffic Control Devices and the Colorado Department of Transportation Standards and Specifications. Traffic signal plans shall be submitted to and approved by Planning and Zoning.

Traffic signal poles shall not be installed within sidewalks or curb ramps.

3.9.3. Signing and Striping: Plans are required for signing/ striping of new streets/roads and re-signing/striping of existing streets/roads necessitated by development. All signing/striping plans shall be in accordance with the Manual on Uniform Traffic Control Devices (MUTCD) and shall be submitted as part of the construction plans.

3.9.3.1. The signing plan shall:

1. Show the general longitudinal location of each existing and proposed sign (by side of street/road and station).
2. Specify the sign legend and sign type (from the MUTCD).
3. Specify the sign size.
4. Include a typical detail of installation dimensions (height, distance from curb or edge of pavement).
5. Include a detail of post and base dimensions and installation plan (showing any wedges or sleeves, depth below surface, any materials used).
6. Specify the blank gauge and material of the sign(s).
7. Note the reflectorization provided.

3.9.3.2. The striping plan shall show:

1. Striping material (paint, thermoplastic, preformed tape, etc.).
2. Color designation and line width.
3. Lane width.
4. Proposed and existing lane striping including skip interval.
5. Typical treatments for accel/decel lanes, turning lanes, bike lanes and crosswalks.

3.9.3.1. Stop signs shall be placed at intersections in accordance with the MUTCD, unless otherwise approved by the Director of Planning and Zoning.

3.9.3.2. All street/road name signs shall be in accordance with the current edition of DRCOG "Guidelines for the Design and Placement of Street Signs in the Denver Region".

3.10. Miscellaneous

3.10.1. Guardrail: In locations where guardrail is required, as determined by Planning and Zoning, design shall be in accordance with the Colorado Department of Transportation Standards and Specifications. Determination of guardrail requirements shall be based on Colorado Department of Transportation Roadway Design Guide, Chapter 20 and other applicable CDOT criteria. Guardrail locations shall be shown on the construction plans.

3.10.2. Noise Attenuation: In locations where arterial streets/roads are adjacent to existing or planned residential areas, fencing and/or other noise attenuation measures are required. These measures may include, but are not limited to, earth beams, landscaping, walls, or a combination.

3.10.3. Street Lighting: Street lights shall be provided at all parkway/arterial/major collector street/road intersections. In addition, street lights shall be provided at all locations where multifamily residential, commercial or industrial site driveways intersect parkway/arterial/major collector streets/roads. Street lights shall be designed in accordance with the most recent ANTI/ICES Roadway Lighting Standards and installed in accordance with Public Service Company of Colorado standards. Light poles shall not be installed within sidewalks or curb ramps.

3.10.4. Roundabouts: Roundabouts may be constructed subject to an approved traffic study. Roundabouts shall be designed in accordance with the current edition of the Federal Highways Administration Publication, Roundabouts: An Informational Guide, and approved by Transportation and Engineering and the appropriate fire protection district. Roundabouts shall also conform to CDOT Roadway Design Guide Chapter 19.

3.10.5. Bridges: Bridges shall be designed in accordance with CDOT Bridge Manuals, the CDOT Roadway Design Guide Chapter 15 and approved by Transportation and Engineering and the appropriate fire protection district.

3.10.6. Curb Extensions (mid-block and corner) and Pedestrian Refuge Islands: Curb extensions and pedestrian refuge islands shall be designed in accordance with the current version of the Federal Highway Administration Bicycle and Pedestrian Report, the CDOT Roadway Design Guide Chapters 12 and 14 and approved by Transportation and Engineering and the appropriate fire protection district.

Chapter 4

Pavement Design and Technical Criteria

4.1. General

This section sets forth the minimum criteria and design procedures for public street/roadway pavements. Recommended design methodologies for asphalt are addressed and essentially follow the Colorado Department of Transportation (CDOT) and the Asphalt Institute methodology. Some standardization of criteria has been made in design procedures. Other design methodologies may be presented for comparison to the current County design method. For private streets and non-maintained streets/roads in County Right-of-Way these same design methodologies are required.

4.2. Pavement Design Report Submittal

4.2.1 Preliminary Pavement Design: A Preliminary Pavement Design shall be used for estimating purposes only to determine the financial security "Exhibit A" associated with development projects. Three standardized Preliminary Pavement Designs corresponding to three zones of unique geotechnical characteristics within Jefferson County are presented in Construction Standards 22-24. Construction Standard 25 shows each of the three zones. Zone 1 corresponds with materials associated with fractured crystalline rock in the higher elevation foothills and mountains. Zone 2 addresses highly expansive clay and claystone material within the Designated Dipping Bedrock Area. The template for this zone includes edge drains for public and private streets. The inclusion of edge drains should be evaluated as a part of the preliminary and final pavement design and edge drain design and details shall be provided with the Street Construction Plans. Final pavement design modifications presented by the applicant, including changes to or elimination of edge drains, may be allowed as determined appropriate by Transportation and Engineering for public streets and Planning and Zoning for private streets. The evaluation of the edge drains in the pavement design and approval of an alternative standard shall be made based on data provided by the Geotechnical Engineer and evaluation by the County. . Zone 3 involves non-cohesive soil and weathered bedrock along the Front Range. The Preliminary Pavement Design shall be replaced with the Final Pavement Design, and the associated "Exhibit A" financial security costs recalculated, after County approval of the Final Pavement Design Report.

4.2.2 Final Pavement Design:

The final pavement design shall be completed and submitted after or in conjunction with County approval of the associated construction plans. All soil samples must be taken after overlot grading, or represent the "as-constructed" soil conditions after construction has been completed. Pavement design approval is required prior to placement of any concrete flatwork and/or paving within County Right-of-Way.

The report shall be prepared by or under the supervision of and signed by a Professional Engineer registered in the State of Colorado and shall include the following information:

A. Vicinity map to locate the investigated area.

B. Scaled drawings showing the location of borings, and required information stated in 4.3.2.

C. Scaled drawings showing the estimated extent of subgrade soil types and Equivalent Daily Load Application (EDLA) for each street.

D. Pavement design alternatives for each street on a scaled drawing.

E. Tabular listing of Sample Designation, Sample Depth, Composite Group Number, Liquid Limit, Plasticity Index, Percent Passing the No. 200 sieve, American Association of State Highway and Transportation Officials (AASHTO) Classification, Group Index, Percent Swell from Swell Consolidation tests, and Soil Description.

F. California Bearing Ratio (CBR) or R-value test results and calculations for each soil type used in the design. Include natural moisture content and natural density.

G. Pavement design nomographs supplied by Jefferson County properly drawn to show Soil Support, EDLA and Structural Number (SN).

H. Design calculations for pavement thickness.

I. Percentage water soluble sulfates, sampled at a minimum of every other boring.

J. A discussion regarding potential subgrade soil problems including, but not limited to:

1. heave or settlement prone soils
2. frost susceptible soils
3. ground water
4. drainage considerations (surface and subsurface)
5. cold weather construction (if appropriate)

6. other factors or properties which could affect the design or performance of the pavement system

K. Recommendations to alleviate or mitigate the impact of problems discussed in Item J above.

4.3. Subgrade Investigation

4.3.1 Field Investigation: The field investigation shall consist of boring soils to a depth of at least five feet below the bottom of the proposed asphalt pavement layer elevation for roads classified as Local or Collector. Borings shall extend 10 feet below the bottom of the proposed asphalt pavement layer elevation on Major Collector / Minor Arterial and Major Arterial roadways. In all cases borings shall be spaced no more than 250 feet apart, or a minimum of one boring for each section of street, unless otherwise required by Transportation and Engineering. The borings shall be checked for ground water at the time of drilling, and then 24-hours after the borings are completed. Samples shall be taken after overlot grading is completed and the subgrade is "rough cut" (1 to 2 feet of proposed elevation). Soil classifications shall be verified after installation of utilities.

Geological features within five feet of the existing ground surface, and all new roadways proposed in the Dipping Bedrock Area, require more detailed investigation including drilling and/or trenching. Every third bore hole shall be a minimum of 10 feet deep, regardless of the road classification.

California Drive samples shall be obtained from each boring within 12-18 inches of the final subgrade elevation.

4.3.2. Boring Profiles: Boring logs shall include the following:

a. Date, Strata Elevations, Depth of Boring.

b. Natural moisture content, Blow Count and Dry Density of each undisturbed sample.

c. Water table elevation.

4.3.3. Classification Testing: Each soil sample shall be tested according to AASHTO and/or the American Society for Testing Materials (ASTM) criteria to determine: Liquid Limit, Plastic Limit, Plasticity Index, and Percentage passing the U.S. Standard No. 200 sieve. Samples of sands and gravels shall require gradation analysis for classification determination.

These data shall be determined using the following methods:

a. Liquid Limit - AASHTO T 89 (ASTM D 4318)

b. Plastic Limit - AASHTO T 90 (ASTM D 4318)

c. Passing No. 200 - AASHTO T 11 (ASTM C 117)

d. Gradation - AASHTO T 27 (ASTM D 422)

The results of these tests shall be used to calculate the AASHTO Classification and Group Index using AASHTO M 145.

4.3.4. Soil Grouping: Soil samples collected in the field investigation can be combined to form soil groups. These groups shall be based upon the AASHTO Classification, Group Index and location within the area investigated. Groupings shall not consist of samples with different AASHTO Classifications (Note: There may be more than one group index within a given classification). Composite samples can be manufactured by combining representative, equal portions of each sample contained within the group and mixing to provide a uniform composite sample of the soil group. This shall be limited to group indices within the range of 7. Composite samples shall be subjected to Classification Testing as outlined in Section 4.3.3. Moisture-Density curves must be included for groups used in the design.

4.3.5. Subbase Support Testing: Individual subbase or composite samples shall be tested to determine the support value using either CBR (California Bearing Ratio) or Hveem Stabilometer (R-value) testing. These values shall be used in the design of pavement sections in accordance with the procedures outlined in Section 4.5. Tests shall be conducted in accordance with the following procedures:

4.3.5.1. CBR Tests: California Bearing Ratio tests shall be conducted in accordance with AASHTO T 193 with the following modifications:

a. Note 4 of AASHTO T 193 shall not apply. A 3- point CBR evaluation is required.

b. The compaction method used for the CBR test shall be determined by the soil classification.

c. Surcharge shall be calculated using a unit weight of 140 pcf for bituminous pavement and 135 pcf for untreated aggregate base course.

d. The design CBR value shall be determined from the CBR - Dry Density Curve and shall be the CBR value at 95 percent compaction.

e. In addition to the values requested in AASHTO T 193, Stress-Penetration curves for each sample, a CBR - Dry Density curve and Proctor Compaction test results shall be reported.

4.3.5.2. R-Value Tests: Hveem Stabilometer tests shall be conducted in accordance with AASHTO T 190. The design R-value shall be at 300 psi exudation pressure. The reported data shall consist of:

a. Dry density and moisture content for each sample.

b. Expansion pressure for each sample.

c. Exudation Pressure - corrected R-value curve showing the 300 psi design R-value.

4.4. Pavement Design Criteria

This section sets forth the parametric input data to be used for the design of pavements of various roadway classifications. If cohesive soil mitigation is required, the soil treatment shall extend from back of sidewalk to back of sidewalk.

4.4.1. Equivalent (18 Kip) Daily Load Applications (EDLA): The pavement design procedure in this chapter is intended to provide for a 20-year service life of pavement, given that normal maintenance is provided to keep roadway surface in an acceptable condition. EDLA and Design Traffic Number (DTN) are considered equivalent units based on 20-year design criteria and an 18 kip axle loading. All data and design nomographs in this chapter use EDLA units for pavement loading repetitions. Calculations shall be included, where applicable.

EDLA criteria for each Jefferson County roadway classification are given in Table 4.1.

Table 4.1 Recommended Equivalent (18 Kip) - Daily Load Applications (EDLA)

Classification	Class Modifier	EDLA Values
Local	Serving <50 D.U.	8
	Serving >50 D.U.	10
Collector	Residential	30
	Other	100
Major Collector/Minor Arterial	All	200
Principal Arterial	All	200

NOTE: Alternative EDLA values may be considered with justification provided by the Transportation Study, proposed land uses, and traffic analysis that defines proportion of truck vehicles, including construction truck traffic.

4.4.2. Design Serviceability: The following criteria shall be used for all Jefferson County roadways to be dedicated for public use and for all private street/roads and non-maintained streets/roads in County ROW:

Table 4.2 Serviceability Index

Roadway Classification	SI
Arterials	2.5
Collectors	2.5

Local	2.0

4.4.3. Minimum Pavement Layers: This paragraph provides the minimum acceptable pavement layers for public and private streets/roads in Jefferson County. These pavement layer thicknesses may be used for preliminary planning purposes. Final pavement designs must be based on actual subbase support test results. Table 4.3 lists these minimum thicknesses for each roadway classification.

Table 4.3 Minimum Pavement Sections

Road Classification	EDLA	Composite Section (inches)			Full Depth Asphalt (inches)
		Asphalt	Subbase		
			Base Course	Stabilized	
<50 D.U.	8	4	6	12	5
=>50 D.U.	10	4	6	12	5
Residential	30	4	6	12	5
Other	100	5	6	12	6
Major Collec-tor	200	5	6	12	7
Minor Arterial	200	5	6	12	7
Major Arterial	200	5	6	12	8

Regardless of the pavement layer design, all soils with an R-value less than 10, or PI greater than 15, shall be stabilized to a minimum of 12 inches below the bottom of the asphalt pavement layer, and shall be included in the depth of treatment.

Cohesive soil subbases shall be overexcavated and replaced with moisture conditioned fill. Minimum requirements for overexcavation are listed below in Table 4.3a.

Table 4.3a Minimum Overexcavation Requirement for Cohesive Soils

Plasticity Index	Depth of Overburden/Fill Treatment	
	Locals/Collectors	Major Collectors/Arterials
15-20	1 foot	2 feet
21-30	2 feet	3 feet
31-40	3 feet	4 feet

NOTES:

1. Road segments with isolated soil types may be designed separately for that individual segment.

2. Soil with (PI) over 40 shall be removed and wasted to a depth of five feet for any type of street.

3. In the Designated Dipping Bedrock Area, all bedrock shall be overexcavated to a depth of at least five (5) feet below the bottom of the proposed pavement layer. Where the bedrock is claystone, the top of the weathered claystone shall be considered as the top of bedrock. Should soil other than bedrock be found throughout the five (5) foot zone, it shall be overexcavated as shown in Table 4.3a.

4. The overexcavation areas shall be recompacted to 95% of maximum Standard Proctor Density (ASTM D-698) at 0 to +4% above optimum moisture content,. There shall be a minimum of 12 inches of soil stabilization below the bottom of the asphalt layer that is included in the total depth of overexcavation.

5. Overexcavation of overburden/fill below the stabilization section may be waived by Transportation and Engineering in areas where either previous overexcavation work during overlot grading has been validated or in cases where a thorough geotechnical investigation determines overexcavation is not warranted. Previous overexcavation work must be validated by compaction reports provided by the developer's geotechnical firm and in accordance with the Land Development Regulation (LDR).

4.4.4. Flexible Pavement Strength Coefficients: Table 4.4. contains standard design coefficients for various pavement materials. Non-standard design coefficients may be used only if approved in advance by Transportation and Engineering. In addition, design values must be verified by predesign mix test data and supported by daily construction tests; or, redesign values will be required.

Table 4.4 Strength Coefficients

Pavement Structure Component*	Strength Coefficients	(Limiting Test Criteria)
Conventional Materials		
Hot Mix Asphalt	0.40	1800 Lbs. Marshall Or R 90+)
Exist. Asphalt Pavement	0.30	(9-15 Yr)
	0.24	(>15 Yr)
Aggregate Base Course	0.12	(Cbr 80+ Or R 78+)
Exist. Aggregate Base Course	0.10	(Cbr 50+ Or R 69+)
Granular Subbase Course	0.07	(Cbr 15 Or R 50+)
Treated Materials		
Cement Treated Aggregate Base	0.23	(7 day, 650-1000 psi)
Lime Stabilized Subbase	0.14	(PI.<6, net swell <.5%, PH >12.3) Compressive Strength >/200 psi, per ASTM 5102-04, Procedure B
All Stabilized Subbase	0.14	Compressive Strength >/200 psi, per ASTM 5102-04, Procedure B

** The combination of one or more of the following courses placed on a subgrade to support the traffic load and distribute it to the roadbed.*

Structural Layers of a conventional flexible pavement design are defined below.

a) Surface Course: One or more layers of a pavement structure designed to accommodate the traffic load, the top layer of which resists skidding, traffic abrasion, and the disintegrating effects of climate. The top layer is sometimes called "Wearing Course.".

b) Base Course: The layer or layers of specified or selected material of designed thickness placed on a subbase or a subgrade to support a surface course. The use of base course is not accepted in areas that base course does not adequately drain from roadway system.

c) Subbase: The layer or layers of specified or selected material of designed thickness placed on a subgrade to support a base course, surface course or both.

d) Subgrade: Prepared and compacted soil extending to such a depth as to affect the structural design.

4.5. Pavement Design Procedure

4.5.1. Flexible Pavements: The following procedure should be used in determining the Structural Number (SN) of the pavement being designed:

4.5.1.1. Using the appropriate roadway classification, determine the corresponding EDLA (Table 4.1).

4.5.1.2. Determine the Serviceability Index (SI) of the roadway classification (Table 4.2).

4.5.1.3. Select the proper nomograph:

Example: Figure 4.1 Flexible Pavements with SI = 2.0

Example: Figure 4.2 Flexible Pavements with SI = 2.5

NOTE: Original nomographs required are available from Transportation and Engineering.

4.5.1.4. Using subgrade CBR or R-Value test results and EDLA, determine the SN from the appropriate design nomograph.

4.5.1.5. Once the Structural Number (SN) has been determined, the design thicknesses of the pavement structure can be determined

by the general equation:

SN = a1D1 + a2D2 + a3D3 + ...

where

a1 = Hot Mix Asphalt (HMA) strength coefficients

a2, a3, an = strength coefficients of additional pavement components

D1 = thickness of Hot Mix Asphalt (HMA) (inches)

D2, D3, Dn = thickness of additional pavement component sections

The strength coefficients for various components of the pavement structure are given in Table 4.4.

The component thickness selected must meet two conditions:

a. Total HMA thickness selected cannot be less than the minimum specified in Table 4.3. for the roadway classification.

b. The base course thickness selected cannot exceed 2.5 times the HMA thickness selected, with a maximum thickness of eight (8) inches.

4.5.1.6. The design must reference any mitigative measures required when the subbase and / or subgrade contains cohesive or expansive soils. Design reports recommending permeable layers such as untreated aggregate base course in the pavement system, must present the measures to be used to ensure adequate drainage of such layers, and to maintain segregation of the layers from the fine-grained soils. If cohesive or expansive soil mitigation is required, the soil stabilization shall extend from back of sidewalk to back of sidewalk. It is required that soils with R-values less than 10 or Plasticity Index greater than 15 be stabilized. Stabilization is for a minimum of the upper twelve (12) inches below the bottom asphalt pavement layer, and shall be included in the depth of treatment.

4.5.2 Rigid Pavements: This procedure has been deleted.

4.6. Material Specifications

The Specifications presented in this section are performance oriented. The County's objective in setting forth these Specifications is to achieve an acceptable quality of roadway structures. All sources for the mined or manufactured materials must be annually approved by Transportation and Engineering as having met the appropriate materials performance specifications. This approval is a condition of using those material sources for improvement construction. For the purpose of these Standards, improvements are all roadway improvements (both public and private), sidewalks, curbs and gutters, appurtenant drainage basins or structures, storm sewer and their access ways, other public works within Jefferson County Right-of-Way, and required stormwater detention structures built on private property and maintained by the property owner(s).

4.6.1. Violations of Approval Conditions

4.6.1.1. Random Testing. Transportation and Engineering may order random tests of materials used in County public improvements and for all private street/roads and non-maintained streets/roads in County ROW to verify compliance with material specifications. These tests are in addition to the requirements of the roadway inspection and testing procedures.

4.6.1.2. Any and all material used to construct public improvements that is not from a certified source, or that is from a certified source and fails one or more random material test, may be subject to complete removal as a condition of County acceptance of that public improvement. Additional tests will be required to confirm the existence and extent of the sub-standard material prior to the initiation of remedial action. The extent of the material to be removed will be at the discretion of Transportation and Engineering.

4.6.2. Use of Materials Not Listed in Section 4.6. Materials in this section and provided with a set of specifications are those deemed to be the primary structural materials commonly or typically used in public improvements. Ancillary public improvement materials such as manufactured paints and coatings, bonding agents, sealers, fabrics or gaskets, insulating materials, etc., should be in compliance with CDOT material specifications for the appropriate material employed. Alternative materials for construction may be proposed for

use. Decisions on acceptability of alternative materials will be made by Transportation and Engineering.

4.6.3. Material Specifications

4.6.3.1. Hot Mix Asphalt: This shall comply with material specifications for PG Binders and asphalt mixes in accordance with CDOT's most recent edition of Standard Specifications for Road and Bridge Construction, 702 and 703. This is hereby referred to as "CDOT Standard Specifications".

4.6.3.2. Stone Mastic Asphalt (SMA): SMA mix shall comply with CDOT Standard Specifications as referenced in Section 4.6.3.1. SMA shall be placed as a 2-inch top lift on all new arterial and collector roads and streets. Local roads and streets may be constructed with all HMA. New acceleration and deceleration lanes added to existing arterials or collectors shall match the existing asphalt mix, whether HMA or SMA.

4.6.3.3. Aggregate Base Course Material. This material shall consist of hard, durable particles or fragments of stone or gravel, crushed to required sizes, containing an appropriate quantity of sand or other finely-divided mineral matter which conforms to the requirements of AASHTO M 147, and to Section 703.03, CDOT Standard Specifications.

Specifications. In addition, the material must have an R-value of 78 or greater, or a CBR of 80+, and must be moisture stabilized. Moisture stability is determined by R-value testing which shows a drop of 12 points or less in R-value between exudation pressures of 300 psi and 100 psi.

Only aggregate from sources approved by the Transportation and Engineering shall be used.

Table 4.5 Aggregate Base Course Materials

Sieve Size	Mass Percent Passing Square Mesh Sieves	
	Class 5	Class 6
2”	100	
1”	95 - 100	100
3/4”	—	95
#4	30 - 70	30 - 65**
#8	—	25 - 55
#200*	03 - 15	03 - 12**
Liquid Limit (LL)	30 Max.	30 Max.

**ASTM (C117)*

***For gravel shoulders, No. 200 shall be 9-12 and No. 4 shall be 30-50.*

Base course may be used only where the base can daylight in barrow ditches or where the subgrade consists of material classifying as GM, GW, GP, SM, SW, or SP using the Unified Soil Classification System.

4.6.3.4. Cement Treated Aggregate Base Course. This material shall consist of a mixture of aggregate materials, Portland cement and water as outlined in Section 304 of the CDOT Standard Specifications. Acceptable aggregates include CDOT Classes 5 and 6. Other aggregates may be used, if previously approved by Transportation and Engineering.

The materials to be used in construction shall be tested and a mix design submitted to the Transportation and Engineering. As a minimum, the mix design report shall contain a description of material sources, gradations and Atterberg limits of aggregates, cement type, Proctor compaction curves and unconfined compressive strength results for each mix, strength versus cement content curves, a design mix and special construction procedures recommended. Testing shall be in accordance with appropriate AASHTO specifications.

Minimum in-place thickness for cement treated aggregate base course shall be twelve (12) inches.

To be approved, the mix shall have a seven-day compressive strength of at least 650 psi and no more than 1,000 psi. The minimum acceptable cement content shall be five percent by weight. Only mix designs approved by Transportation and Engineering shall be used. Approvals are required on a project basis, or an annual basis for suppliers, prior to issuing construction permits.

4.6.3.5. Lime Treated Subgrade: This Material consists of a mixture of native or imported soils, hydrated or quick lime and water as outlined by ASTM Specification C977, CDOT Standard Specification 307.

The materials to be used in construction shall be tested and a mix design submitted to Transportation and Engineering for approval. As a minimum, the mix design report shall contain a description of material sources, gradation and Atterberg limits of native soils, Atterberg limits, pH and five day, 100°F cure unconfined compressive test results for each mix, strength versus lime content curves, a design mix and special construction procedures recommended. Testing shall be in accordance with appropriate AASHTO methods.

To be approved, the mix shall meet the following requirements:

1. Minimum pH of 12.3 after completion of initial mixing.
2. Plasticity Index less than 6, per ASTM D4318.
3. Minimum hydrated lime of 5.0% dry weight, per ASTM D3.
4. Minimum unconfined compressive strength shall be 200 psi, per ASTM D1633.
5. Sulfate concentrations not to exceed .5%

Note: Field validation shall be required after soil blending occurs during construction.

Only mix designs approved by Transportation and Engineering shall be used. Approvals are required on a project basis prior to issuing construction permits. Minimum in-place thickness for this material shall be twelve (12) inches.

4.6.3.6. Lime/Fly-Ash Stabilized: This material consists of a mixture of native or imported soils, hydrated or quick lime, Class “C” Fly-Ash, and water as outlined by ASTM Specification C977, CDOT Section 307.

The materials to be used in construction shall be tested and a mix design submitted to the Transportation and Engineering for approval. As a minimum, the mix design report shall contain a description of material sources, gradation and Atterberg limits of native soils, Atterberg limits, pH and five-day unconfined compressive test results for each mix, strength versus lime/fly-ash content curves, a design mix and special construction procedures recommended. Testing shall be in accordance with appropriate AASHTO methods.

To be approved, the mix shall meet the following requirements:

1. Plasticity Index less than 6, per ASTM D4318.
2. Minimum unconfined compressive strength shall be 200 psi, per ASTM D1633.
3. Sulfate concentrations not to exceed .5%.

NOTE: Field validation may be required after soil blending occurs during construction.

Only mix designs approved by Transportation and Engineering shall be used. Approvals are required on a project basis prior to issuing construction permits. Minimum in-place thickness for this material shall be twelve (12) inches.

4.6.3.7. Cement Stabilized Subgrade. This material consists of a mixture of native or imported soils, Portland cement and water.

The materials to be used on construction shall be tested and a mix design submitted to Transportation and Engineering for approval. As a minimum, the mix design report shall contain a description of material sources, gradation and Atterberg limits of native soils, Atterberg limits, pH and five-day unconfined compressive test results for each mix, strength versus cement content curves, a design mix and special construction procedures recommended. Testing shall be in accordance with appropriate AASHTO methods.

To be approved, the mix shall meet the following requirements:

1. Minimum Portland cement of 3.0% dry weight per ASTM D3.
2. Minimum unconfined compressive strength shall be 200 psi, per ASTM D1633.
3. Sulfate concentrations not to exceed 0.5%.

NOTE: Field validation may be required after soil blending occurs during construction.

Only mix designs approved by Transportation and Engineering shall be used. Approvals are required on a project basis prior to issuing construction permits. Minimum in-place thickness for this material shall be twelve (12) inches.

Chapter 5

Construction Specifications and Standards

5.1 Construction Specifications

The Permittee agrees to adhere to all construction specifications set forth in the latest edition of the Jefferson County Land Development Regulation, the Jefferson County Transportation Design and Construction Manual and the Colorado Department of Transportation (CDOT) Standard Specifications for Road and Bridge Construction manuals.

5.1.1. Permits: All work performed within County Rights-of-Way and/or easements shall require the issuance of a street/road construction permit. Permits shall be obtained at the Jefferson County Transportation and Engineering office, located at 100 Jefferson County Parkway, Suite 3500, Golden, Colorado.

5.1.1.1. Any permit issued shall pertain only to construction within the County-owned Right-of-Way and is in no way considered a permit to enter on any private property adjacent to such Right-of-Way nor to alter or disturb any facilities or installations existing within the Right-of-Way which may have been installed, and are owned, by others.

5.1.1.2. Permits, when issued, shall be valid for a period of ninety (90) calendar days, and may be renewed for one (1) additional ninety (90) calendar day period, providing the renewal is obtained (renewal may be obtained by telephone) prior to the permit expiration date. Failure to obtain a renewal as stated herein will require obtaining a new permit and payment of applicable fees.

5.1.1.3. Any permit determined to be without an adequate bond as required in Section 5.1.2. below, shall be subject to immediate revocation by Transportation and Engineering.

5.1.2. Bonds: A non-cancellable permit bond shall be required for Right-of-Way Use and Construction Permits and License Agreements Section of the County Policies and Procedures for Streets and Roads.

5.1.3. General Specifications:

5.1.3.1. Any work done to a street/road or other County property under a permit shall result in the street/road or other property being returned to a condition equal to or better than original, within the limits of careful, diligent workmanship, good planning, and quality materials, with said work being accomplished in the least possible time and with the least disturbance to the normal functioning of the street/road or other property.

5.1.3.2. All backfill material, compaction, and resurfacing of any excavation made in the County property shall be done in accordance with specifications and standards approved by and on file with Transportation and Engineering.

5.1.4. Road Closures: Normally, only one side of a public street/road may be blocked at any given time. Should operating conditions require complete closure, advance approval of the closing of a public street/road must be obtained from Transportation and Engineering or advance approval of the closing of a private road must be obtained from Planning and Zoning. The permittee shall notify the appropriate fire protection district, the Jefferson County Sheriff's Department, and the Colorado State Patrol concerning exact location of

barricades and dates traffic will be impeded. Barricades shall be maintained by the responsible contractor.

5.1.5. Utility Installations:

5.1.5.1. Underground: All utility lines, including Cable TV, shall be installed a minimum of two (2) feet below ground surface, or proposed roadway elevation, whichever is lower. This requirement is applicable throughout the Right-of-Way, including ditch lines and/or borrow pits. Exceptions may be granted by Transportation and Engineering where warranted and upon prior written request and approval.

5.1.5.2. Overhead: A minimum ground clearance of 18 feet 0 inches shall be provided where overhead utility lines cross public roads and streets. The clearance shall be measured at the lowest point where the line crosses the traveled portion of the road and/or street.

5.1.6. Base Course: All aggregate base course shall meet CDOT Class 6 Specifications, or an acceptable base course predicated on specific site conditions as approved by Transportation and Engineering. Native material is unacceptable as base course.

5.1.7. All concrete shall be in conformance with the appropriate class as specified in Section 601 of the CDOT Standard Specifications. A combination cure-sealer shall be used for concrete flatwork. Provide adequate texture by means of a moderately heavy broom finish to surfaces prior to applying the cure-sealer. The product shall be Dayton Superior Cure &Seal LV 25% J20 UV or approved equal. Apply two coats per manufacturer's instructions to all exposed surfaces, with the second coat applied at right angles to the first for complete coverage. The temperature range of application is 35 to 90 degrees F. Concrete shall not be left exposed for more than one hour between the time finishing is completed and commencement of curing treatment.

5.1.7.1. Concrete may be placed by machine methods provided that all finish lines are within 1/8" ± tolerance of the lines shown on the plans. The flowline must be free draining.

5.1.7.2. One-half (1/2) inch expansion joint material shall be installed when abutting any existing concrete or a fixed structure.

5.1.7.3 Median Cover Material and Median Edging Patterned Concrete: Median cover material and median edging patterned concrete shall be colored concrete that is Davis color #5084 "Harvest Gold" or approved equal. The release agent shall be Concrete Coatings Stamp-TEK ™ liquid release or approved equal. The stamp pattern shall be Matcrete "UK Cobblestone" or equivalent. A combination cure-sealer containing silane shall be used for concrete flatwork. The cure-seal product shall be SpecChem Cure Shield EX or approved equal. Control joints are saw cut every 10 feet. Expansion joint material with a zip-strip shall be installed between the patterned concrete and the back of curb. Control joints and expansion joints shall be sealed with Sikaflex-2C or approved equal. Refer to STND-18 and STND-19 for details. Granular pre-emergent herbicide shall be placed in the areas that are to receive median cover.

5.1.7.4. Detectable Warnings on Concrete Curb Ramps: Detectable Warnings on concrete curb ramps shall be truncated domes of the dimensions shown on the plans. Domes shall be BRICK RED in color. Domes shall be prefabricated by the manufacturer as a pattern on embeddedable surface plates. Dome plates shall be set into wet concrete and shall not be glue or spray-on varieties. Detectable warning plates shall not be concrete pavers, masonry pavers, or cast-iron plates. Refer to STND-16 for details.

5.1.7.5. Waterproofing Membranes: Waterproofing membrane shall be placed on concrete bridge deck surfaces, and concrete box culverts per the waterproofing membrane detail. Surfaces to receive waterproofing membrane shall be thoroughly cleaned via sandblasting or high pressure water. The waterproofing membrane shall be a hot pour asphaltic material, with 55 pound (#55) minimum asphaltic based roll material immediately placed on top. Refer to STND-17 for details.

5.1.8.1 Storm Sewer Pipe: Within County Right-of-Way and/or easements, all storm sewer pipe shall be minimum Class II Reinforced Concrete Pipe (RCP) in accordance with ASTM C-76-03, C-506-02 or C-507-02 or HP Storm Pipe. Actual depth of cover, live load, and field conditions may require structurally stronger pipe. CSP and HDPE pipe, in accordance with manufacturer's specifications, are only permitted in privately owned and maintained installations and shall be located within County drainage easements.

5.1.8.2 All new or repaired storm sewer pipe and associated structures within County Right-of-Way and/or easements shall be constructed with trace wire and test locations. Installation shall be tested for operation and documented with Form Letter "T" in accordance

with Jefferson County Land Development Regulation Section 33. Test boxes shall be placed behind curb and gutter if sidewalk is detached, and behind sidewalk if attached. See details for the tracer wire and test box installation 28-1 through 28-3.

5.1.9. Culverts: Within County Right-of-Way and/or easements, all culverts shall conform to the Storm Drainage Design and Technical Criteria.

5.1.10. Traffic Control Devices

All traffic control devices shall conform to the MUTCD and be approved by Transportation and Engineering prior to installation. Conformance to the following minimum materials specifications or approved equal is required. Traffic signals shall conform to CDOT standards.

5.1.10.1. Signs, Sign Posts, and Anchors: Sign faces, posts and anchors shall conform with the following materials specifications. Non-standard signs, posts, and anchors will not be maintained by the County. Post anchors for sign installation after complete construction require approval by Transportation and Engineering.

5.1.10.1.1. Street Name Signs: Sign blanks shall be 6061 or 5052-H38 aluminum alloy 0.100 inches thick. Polyethylene plates (Polyplate) is not allowed. Facing shall be green, electrocut High-Intensity reflective sheeting with white High-Intensity Prismatic grade retroreflective letters and numerals. Refer to STND-12 for details.

5.1.10.1.2. Regulatory and Warning Signs: Sign blanks shall be 6061 or 5052-H38 aluminum alloy 0.100 inches thick. High-Intensity prismatic grade retroreflective sheeting shall be used for the background color, and letters and numerals for all regulatory and warning signs. Refer to STND-12 for details.

5.1.10.1.3. Sign Posts: All sign posts shall be two (2) inch by two (2) inch galvanized TELESPAR® (or equivalent) tube with 12 Gauge (0.105 inch wall thickness), and 7/16 inch pre-punched holes on one (1) inch centers, all sides over full length, ten (10) feet in length. U-posts are not allowed.

5.1.10.1.4. Sign Post Bases: All sign post anchors shall be anchored securely in the soil or concrete to create a breakaway system. All sign post anchors shall be 2.25 inch x 2.25 inch perforated square tubing, galvanized steel, TELESPAR ® (or equivalent), a minimum of 3 feet in length. Each tube section shall be 12 Gauge (0.105 inch wall thickness) with 7/16 inch diameter pre-punched holes on 1-inch centers, all sides over full length. The anchor tubing shall be twist resistant and allow mounting of a one-size smaller TELESPAR ® (or equivalent) sign post. The anchor shall be driven into the soil no less than 30 inches. The sign post shall be inserted 8 inches inside the anchor tubing and double bolted in place prior to covering. Each bolt shall be a Hex Head with a Washer and matching Hex Nut. Bolts shall be secured at the exposed top of the anchor base and placed at opposite tube sides, 90 degrees apart. Signs to be placed in concrete medians or islands shall have the anchor driven inside of a 6-inch Schedule 40 PVC sleeve, with the sleeve measuring the thickness of the concrete plus 1-inch, and secured to the post in the same fashion as described in 5.1.10.1.3. The PVC sleeve shall be embedded in the surrounding concrete when the concrete is placed. Sign post anchors driven in soil not within concrete medians or islands shall be anchored in the same fashion without the PVC sleeve. Refer to STND-13 for details.

5.1.10.2. Pavement Marking: Pavement marking materials shall be used as specified for the service life, type, and locations as identified below.

5.1.10.2.1. Temporary Application, Construction, or Detours: Waterborne paint (High Build) shall be used for short duration striping of lane lines, channelizing lines, edge (fog) lines, and centerlines. The same waterborne paint may be used for crosswalks and stop (bar) lines as deemed necessary. Stencil markings, such as symbols or arrows, shall not be placed for temporary use unless approved by the engineer.

5.1.10.2.2. Permanent Application: Epoxy paint shall be used for striping of lane lines, channelizing lines, edge (fog) lines, and centerlines. Preformed Thermoplastic Pavement Markings shall be used for crosswalk and stop (bar) line markings, railroad (RR) crossings, words, symbols, and arrows. The thickness of all Preformed Thermoplastic Pavement Markings shall be 125 mils. Preformed Plastic Marking Tape (Type I), may be used in lieu of Preformed Thermoplastic Pavement Markings, if approved by Transportation and

Engineering prior to installation. Preformed Plastic Marking Tape shall be 3M™ Stamark™ 5730 (White), 3M™ Stamark™ A270ES (White), or approved equivalent.

5.1.10.3. Curb Ramps: All required curb ramps shall conform to current CDOT M&S Standard Plans and be approved by Transportation and Engineering.

5.1.10.4. Bike Racks: All required bike racks shall conform to Association of Pedestrian and Bicycle Professionals "Essentials of Bike Parking: Selecting and Installing Bike Parking that Works".

5.2 Construction Standards

All construction within County Right-of-Way and/or easements shall be in conformance with current CDOT M & S Standards and the following County construction standards.

Standard Number	Description
1	Curb and Gutter
2	Combination Curb, Gutter and Sidewalk
3	6" Vertical Curb, Gutter and Attached Sidewalk
4	6" Vertical Curb, Gutter and Detached Sidewalk
5	Typical Intersection Crosspan
6	Driveway Section for 6" Vertical Curb and Gutter
7-1 and 7-2	Concrete Driveway Sections for Combination Curb, Gutter and Sidewalk (Type 2 and Type 3)
8	Driveway/Private Road Approaches =
9	Typical Median Designs
10	Concrete Joint Details
11	Raised Crossing Details
12	Speed Hump Installation
13	Asphalt Street/Road Patchback
14	Road and Street Name Signs
15	Sign Posts and Bases
16	Typical Arterial/Major Collector Street Lighting
17	Street Name Sign and Bracket on Traffic Signal Pole
18	Waterproofing Membranes for Concrete Box Culvert

19	Waterproofing Membranes for Bridge Deck
20	Median Cover Material Patterned Concrete
21	Median Edging Patterned Concrete
22	Zone 1 Foothills / Mountain Area Preliminary Pavement Design
23-1 and 23-2	Zone 2 Dipping Bedrock Area Preliminary Pavement Design Attached and Detached Sidewalks in ROW
24	Zone 3 Front Range Area Preliminary Pavement Design
25	Design Zone Preliminary Pavement Sections
26-1	Signal Poles Design Information
26-2	Signal Poles General Layout
26-3	Signal Poles Maximum Loading Information (1)
26-4	Signal Poles Maximum Loading Information (2)
26-5	Signal Poles Details (1)
26-6	Signal Poles Details (2)
26-7	Signal Poles Caisson Details (1)
26-8	Signal Poles Caisson Details (2)
26-9	Signal Poles Caisson Details (3)
26-10	Signal Pole and Mast Arm Mounting Details (1)
26-11	Signal Pole and Mast Arm Mounting Details (2)
26-12	Traffic Signal Pull Box
27-1, 27-2 and 27-3	Flashing Beacon and Sign Installations
28-1, 28-2, and 28-3	Utility Wire Installation Location – Storm Sewer

Chapter 6

Transportation Studies

6.1 Requirements for Transportation Studies (TS)

All traffic data collected must align with industry best practices to ensure consistency across the County. The below

criteria must be met:

- Locations for traffic data collection shall be determined at pre-application or equivalent meeting with Jefferson County Staff and cater to the unique circumstances of each development application. Developments with local impacts will have fewer intersections to analyze whereas regional impacts will require a greater number of intersections to be analyzed. Vehicle volumes must be collected for at least a 24-hour period on a Tuesday, Wednesday, or Thursday and shall not be collected during inclement weather events, holidays, or adjacent to County holidays (Thanksgiving, Christmas, New Years, etc.). Land uses with weekend peak-hour volumes shall collect at least one weekday and full weekend volumes.
- Bicycle and/or pedestrian volumes will be required in Activity Centers as defined by the Jefferson County Comprehensive Master Plan or with proposed land uses that foster active modes of transportation. Additional vulnerable roadway users, such as equestrians, children, or seniors will require special consideration if nearby land uses are conducive to a higher volume of vulnerable roadway users. Transportation & Engineering may request additional data collection or Measures of Effectiveness as identified in CDOT's Traffic Analysis and Forecasting Guidelines for unique site-specific or off-site conditions.

All traffic projections must use the latest addition of the ITE Trip Generation Manual.

6.1.1 The TS categories are as follows:

Transportation Information: Transportation Information shall be submitted for any development that generates fewer than 150 vehicle-trips per day. The submitted information will describe the proposed land use and estimate the expected number of daily vehicle trips. If submitting for a rezoning, provide a comparison of the existing land use and zoning to the most intense land use under the proposed zoning. If submitting for **a**ny other application type, provide a comparison of the existing land use compared to the proposed land use. This comparison shall be performed using the ITE Trip Generation Manual and/or by providing support for the expected vehicle usage of the site. The Transportation Information shall also describe any other relevant information that would impact transportation operations and safety.

Trip Generation Memorandum: A Trip Generation Memorandum (TGM) is required when the land uses proposed with a development are expected to generate between 150 and 800 vehicle-trips per day. The TGM should show a computation of trips generated from the proposed land use(s). The TGM for a proposed rezoning should also include a computational comparison of the maximum possible number of trips generated from the proposed land uses and the maximum possible trips generated from existing and allowed land uses. Include a table summarizing trip generation estimates.

Transportation Analysis: A Transportation Analysis (TA) is required during a rezoning to determine the amount and/or distribution of traffic generated from a proposed development that is expected to generate 800 average daily vehicle-trips or more. The TA should show a computational comparison of the maximum possible trips generated from the proposed land use(s) compared to the number of maximum possible trips generated from existing zoning. It should also include a percentage change in the average daily traffic (ADT) and peak hour traffic of adjacent roadways. The analysis should conceptually address potential onsite and offsite improvements that may be necessary to mitigate traffic impacts from the proposed development, including improvements that may already be required by County regulations.

Transportation Impact Study: A Transportation Impact Study (TIS) is required during a Site Development Plan (SDP) or Plat process when a proposed development is expected to generate 800 average daily vehicle-trips or more. While the trip generation from a proposed development is the main quantitative threshold, existing transportation issues such as a high crash location, complex intersection geometrics or other specific problems or deficiencies may also necessitate a TIS. The scope of the TIS should be agreed upon by the County and the applicant during the Preliminary Application process. The study should address any onsite and offsite improvements that may be necessary to mitigate traffic impacts from the proposed development. Required improvements may include the addition of traffic signals, turning lanes, and bicycle/pedestrian facilities, including any other improvements which may be suggested by the

study.

Letter of Conformance with an Approved TIS: If a development in the Site Development Plan process is expected to generate more than 800 new vehicle trips, and there is an approved TIS on file from the last 3 years for the overall or regional development, a letter of conformance describing that the land uses proposed in the development match those assumed in the overall TIS and a copy of that TIS are required. This letter of conformance must confirm all current County regulations are met.

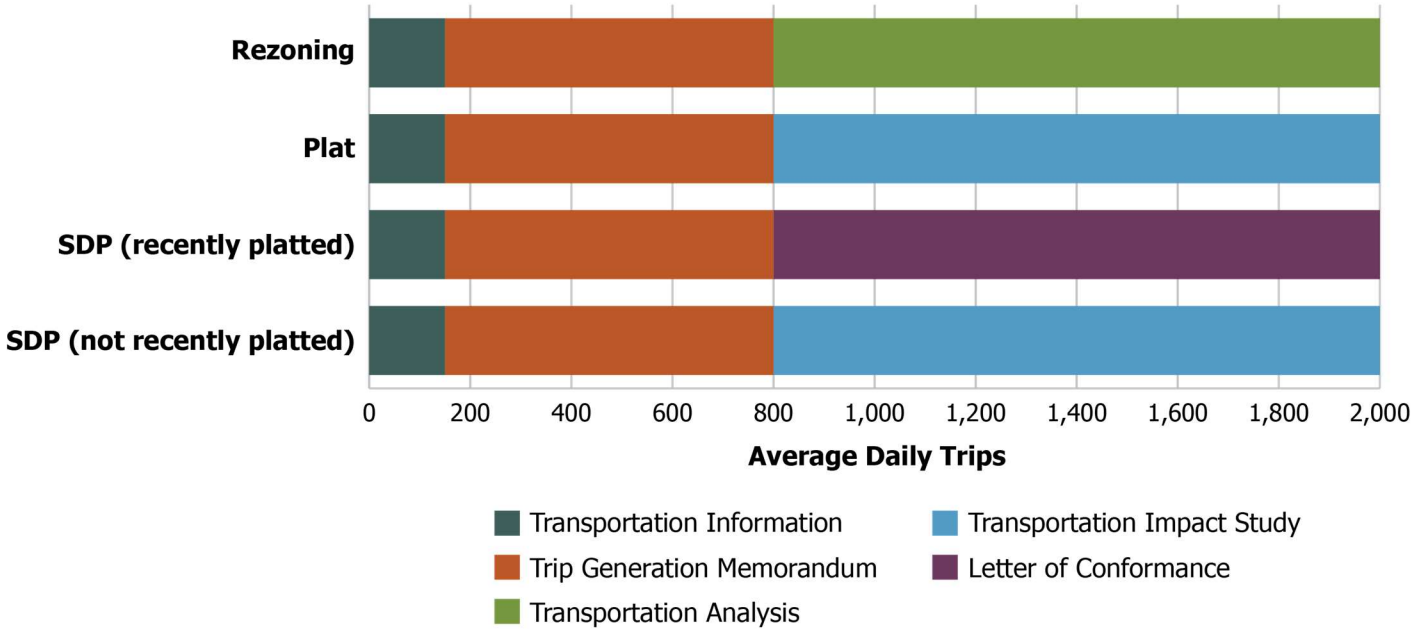

Transportation Information

6.2.1 Responsibility

General: The applicant is responsible for providing trip generation information, from the latest addition of the ITE Trip Generation Manual, when proposing a development generating below 150 vehicle trips.

Review Process: Transportation Information for a proposed development will undergo an iterative review process in accordance with the Land Development Regulation. The applicant shall provide a letter identifying changes to the Transportation Information with each re-submittal.

Certification: The Transportation Information should be prepared under the supervision of a qualified and experienced transportation professional who has training in traffic and transportation engineering or planning. Such supervision is not required if applicant has access to the ITE Trip Generation Manual.

6.2.2: Format

Transportation Information should be presented in tables, maps, and diagrams in lieu of a narrative, for clarity and ease of review. See Appendix A detailing the format for providing Transportation Information.

6.3 Trip Generation Memoranda

6.3.1 Responsibility

General: The applicant is responsible for providing trip generation computation when proposing a development generating between 150 and 800 vehicle trips.

Review Process: The TGM for a proposed development will undergo an iterative review process in accordance with the Land

Development Regulation. The applicant shall provide a letter identifying changes to the TGM with each re-submittal.

Certification: The TGM shall be prepared under the supervision of a qualified and experienced transportation professional who has specific training in traffic and transportation engineering or planning.

6.3.2 Format

The TGM data should be presented in tables, graphs, maps, and diagrams in lieu of a narrative, for clarity and ease of review. See Appendix A detailing the format for providing Trip General Memoranda.

6.4 Responsibility for Transportation Studies

General: The impacts from a proposed development as assessed in the TS are the primary responsibility of the applicant and their engineer.

Review Process: The TS for a proposed development will undergo an iterative review process in accordance with the Land Development Regulation. The applicant shall provide a letter identifying changes to the Transportation Study, if applicable.

Certification: The TS shall be prepared under the supervision of a qualified and experienced transportation professional who has specific training in traffic and transportation engineering and planning. All transportation operations and design work shall be completed under the supervision of an experienced professional in conformance with the State of Colorado requirements. The TS shall be signed and sealed by a registered professional engineer in the State of Colorado.

6.5Transportation Analyses

6.5.1 Responsibility

General: The applicant is responsible to demonstrate how transportation systems can accommodate the traffic generated by a proposed development or how the system can be improved to accommodate the traffic generated by the development.

Review Process: The TA for a proposed rezone will undergo an iterative review process in accordance with the Zoning Resolution. The applicant shall provide a letter identifying changes to the TA with each re-submittal.

Certification: The TA shall be prepared under the supervision of a qualified and experienced transportation professional who has specific training in traffic and transportation engineering or planning.

6.5.2 Format

Throughout the TA, data should be presented in tables, graphs, maps, and diagrams in lieu of a narrative, for clarity and ease of review. See Appendix A detailing the format for providing Transportation Analyses.

6.6 Transportation Impact Studies

6.6.1 Responsibility

General: The applicant and their engineer are responsible for mitigating the impacts from a proposed development as assessed in the TIS.

Review Process: The TIS for a proposed development will undergo an iterative review process in accordance with the Land Development Regulation. The applicant shall provide a letter identifying changes to the Transportation Study with each re-submittal of the TIS.

Certification: The TIS shall be prepared under the supervision of a qualified and experienced transportation professional who has specific training in traffic and transportation engineering and planning. All transportation operations and design work shall be completed under the supervision of an experienced professional in conformance with the State of Colorado requirements. The TIS shall be signed and sealed by a registered Professional Engineer in the State of Colorado.

6.6.2 Format

Throughout the TIS, data should be presented in tables, graphs, maps, and diagrams in lieu of a narrative, for clarity and ease of review. See Appendix A detailing the format for providing Transportation Impact Studies.

Definitions

AASHTO

American Association of State Highway and Transportation Officials, A Policy on Geometric Design of Highways and Streets, current edition.

ADT

Average Daily Traffic

All Weather Travel Surface

An all weather travel surface is defined as an improved surface that is designed to withstand all weather conditions for typical road use and able to support emergency vehicles. The surface is required to be constructed of concrete, asphalt, recycled asphalt or a minimum of 6-inches of class 6 road base. Axle Load

The total load transmitted by all wheels on a single axle extending across the full width of the vehicle. Tandem axles 40 inches or less apart shall be considered as a single axle.

California Bearing Ratio

A measure of the ability of a soil or aggregate to resist the transmission of a vertical load in a lateral direction.

CDOT

Colorado Department of Transportation

Dip of Natural Terrain

The dip of the natural terrain refers to the direction at which the existing ground surface slopes downward. The direction of the dip should be drawn perpendicular to the existing contour lines.

Emulsified Asphalt Treated Base

A base consisting of a mixture of mineral aggregate and emulsified asphalt spread on a prepared surface to support a surface course.

Equivalent Single Axle Loads (ESAL)

A numerical factor that expresses the relationship of a given axle load to another axle load in terms of their effect on a serviceability of a pavement structure. All axle loads are equated in terms of the equivalent number of repetitions of an 18,000 pound single axle.

18k EDLA

18,000 pound single axle Equivalent Daily Load Applications (explained in “Axle Load” and “ESAL” above).

Flexible Pavement

A pavement structure which maintains contact with and distributes loads to the subgrade and depends upon aggregate interlock, particle friction, and cohesion for stability.

Flowline

The transition point between the gutter and the face of the curb. For a cross or valley pan, it is the center of the pan. Where no curb exists, the flowline will be considered the edge of the outside traveled lane.

Grade

Rate or percent of change in slope, either ascending or descending from or along the highway. It is measured along the centerline of the highway or access.

Lime Treated Subgrade

Subgrade consisting of a mixture of soil, hydrated lime and water, usually mixed in place and placed to support a pavement structure.

MUTCD

The Manual on Uniform Traffic Control Devices and the Colorado Supplement, current editions.

Mountains

See "Mountains" definition in the Zoning Resolution.

Passing Sight Distance

The visibility distance required to allow drivers to execute safe passing maneuvers in the opposing traffic lane of a two-lane, two-way highway.

Pavement Structure

The combination of subbase, base course and surface course placed on a subgrade to support the traffic load and distribute it to the roadbed.

a. Subbase: The layer or layers of specified or selected material of designed thickness placed on a subgrade to support a base course.

b. Base Course: The layer or layers of specified or selected material of designed thickness placed on a subbase or subgrade to support a surface course.

c. Surface Course: The uppermost component of a pavement structure designed to accommodate the traffic load, the top layer of which resists skidding, traffic abrasion, and the disintegrating effects of climate. The top layer is sometimes called "Wearing Course".

Plains

See "Plains" definition in the Zoning Resolution.

Plant Mixed Bituminous Base

A base consisting of mineral aggregate and bituminous material, mixed in a central plant, laid and compacted while hot, on a subbase or a subgrade, to support a surface course.

Plant Mixed Bituminous Pavement

A combination of mineral aggregate and bituminous material mixed in a central plant, laid and compacted while hot.

Regional Factor

A numerical factor expressed as a summation of the values assigned for precipitation, elevation, and drainage. This factor is used to adjust the structural number.

Roads

Public or private Rights-of-Way within the Mountain Area or as otherwise designated within this MANUAL.

Serviceability Index

A number indicative of the ability of the pavement to serve traffic at any particular time in its design life.

Sidewalk

A portion of a street designated for pedestrians and other vulnerable roadway users, in accordance with state law.

Signal Progression

Progressive movement of traffic at a planned rate of speed through adjacent signalized locations within a traffic control system without stopping.

Soil Support Value

A number which expresses the relative ability of a soil or aggregate mixture to support traffic loads through the pavement structure.

Speed Change Lane

A separate lane for the purpose of enabling a vehicle entering or leaving a roadway to increase (acceleration lane) or decrease (deceleration lane) its speed to a rate at which it can more safely merge or diverge with through traffic.

Stabilometer "R" Value

A numerical value expressing the ability of a soil or aggregate to resist the transmission of vertical load in a lateral or horizontal direction.

Stopping Sight Distance

The minimum sight distance necessary to enable a vehicle traveling at or near the design speed to stop before reaching a stationary object in its path.

Storage Lane

Additional lane footage added to a deceleration lane to store the maximum number of vehicles likely to accumulate during critical periods without interfering with the through lanes.

Streets

Public or private Rights-of-Way within the Plains Area or as otherwise designated within this MANUAL.

Strength Coefficient

A factor used for expressing the relative strength of each layer in a pavement structure.

Structural Number

A number derived from an analysis of roadbed and traffic conditions. A Weighted Structural Number is a Structural Number which has been adjusted for environmental conditions. A Weighted Structural Number may be converted to pavement structure thickness through the use of suitable factors related to the type of material being used in the pavement structure.

Traffic Analysis Period

A common analysis period (usually 20 years) used in geometric design.

Untreated Base Course

A layer or layers of base course without treatment of any kind.

Vulnerable Roadway User

Roadway users that are not protected by a vehicle or other shield while on a roadway and is at a greater risk for involvement in a serious injury or fatal crash. Vulnerable roadway users include, but are not limited to, bicyclists, pedestrian, and equestrians; those using mobility devices such as wheelchairs; those using micromobility devices such as electric scooters; and other forms of rolling such as roller blades and skateboards.

Appendix A:

Transportation Studies Formatting

A.1 Transportation Information Format:

Introduction and Summary

The purpose of the Transportation Information should be clearly stated. This section should concisely summarize findings and conclusions.

Proposed Development

Provide a description of the project site including size, location, current land use, intensity, existing zoning, proposed zoning (if applicable), and access roadways.

Trip Generation Comparison Table

Provide a trip generation comparison table showing the traffic generated from existing land use(s) compared to the maximum potential trip generation for land uses associated with the proposed development. The latest edition of ITE's Trip Generation Handbook provides guidance on how to select between rates and equations when both are available. The national published data provided by ITE should be used as starting points in estimating the amount of traffic by a specific building type or land use. If no trip generation rates nor equations are available from ITE's Trip Generation Handbook, traffic counts from similar site(s) should be provided as a basis for trip generation estimates. If no site(s) with similar land uses are available, an analysis of the proposed land use based on the site's capacity may be considered.

Table 1: Rezone Transportation Information

Land Use Type /Zoning (Type)	**Land Use Type**	**ITE Code**	**Unit**	**Size**	**Vehicles per day**
Existing Land Use					
Total					
Existing Maximum* Zoning					
Total					
Proposed Maximum* Zoning					
Total					
Additional Trips (Proposed Zoning Total minus Existing Zoning Total)					

Table 2: Change in Land Use Transportation Information

Land Use Type	**Land Use Type**	**ITE Code**	**Unit**	**Size**	**Vehicles per day**
Existing Land Use					
Total					

Proposed Land Use					
Total					
Additional Trips (Proposed Land Use Total minus Existing Land Use Total)					

Findings

Provide a summary of findings.

A.2 Trip Generation Memoranda Format:

Introduction and Summary

The purpose of the TGM should be clearly stated. This section should concisely summarize findings and conclusions.

Proposed Development

Provide a description of the project site including size, location, current land use, intensity, existing zoning, proposed zoning, and access roadways.

Existing Conditions

Current traffic volume counts including a minimum of 24 hours of data should be collected to determine existing traffic conditions in the study area. If the most recent traffic counts available are 3 years old or older, new traffic counts shall be collected.

Trip Generation Comparison Table

Provide a trip generation comparison table showing the traffic generated from existing land use(s) compared to the maximum potential trip generation for land uses associated with the proposed development. The latest edition of ITE's Trip Generation Handbook provides guidance on how to select between rates and equations when both are available. The national published data provided by ITE should be used as starting points in estimating the amount of traffic by a specific building type or land use. If no trip generation rates nor equations are available from ITE's Trip Generation Handbook, traffic counts from similar site(s) should be provided as a basis for trip generation estimates. If no site(s) with similar land uses are available, an analysis of the proposed land use based on the site's capacity may be considered.

Findings

Provide a summary of findings, including the percentage increase in average daily traffic (ADT) on adjacent roadways from existing conditions to proposed.

C. Example Outline

Trip Generation Memo

[Development Title]

Case Number: XX-XXXXXX XX

Applicant Information

[Name]

[Address]

[Phone Number]

[Email]

Report Author

[Name]

[Address]

[Phone Number]

[Email]

Date of Original Report: XX-XX-XXXX

Date of Revision: XX-XX-XXXX

Purpose of Analysis

Introduction

The purpose of this Trip Generation Memo is to evaluate the potential impacts of the proposed development to the surrounding transportation network.

Project Overview

[Description of the project site including size, location, current land use, intensity, existing zoning, proposed zoning, access roadways, and proposed development phasing. Site plan should not be included in this analysis.]

Existing Roadway System

[Include a description of the study area roadways and intersections including current traffic counts.]

Projected Transportation Impact

Trip Generation

[Description of publication or methodology used to generate daily and peak hour traffic volumes for the proposed development; trip reduction and internal trip capture rates and pass-by trips not applicable]

Table 1: Trip Generation Summary Table

Trip Generation Summary Table											
Land Use Type /Zoning (Type)	**Land Use Type**	**ITE Code**	**Unit**	**Size**	**Vehicles per day**	**AM Peak**			**PM Peak**		
						In	Out	Total	In	Out	Total
Existing Land Use											
Total											
Existing Maximum* Zoning											
Total											
Proposed Maximum* Zoning											
Total											
Comparison Table											
Zoning Additional Trips (Proposed Zoning Total minus Existing Zoning Total)											

*Maximum potential trip generation based on the existing and proposed zoning

Findings

[Summarize existing land use/proposed intended land use and existing/proposed zoning trip generation and potential impacts to the

transportation network]

Existing Land Use/Proposed Intended Land Use

Existing Zoning/Proposed Zoning

Appendix

[Insert any data used in analysis:]

Trip Generation Calculations

Traffic Counts

A.3 Transportation Analysis Format:

Introduction and Summary

The purpose of the TA should be clearly stated. This section should contain an Executive Summary that concisely summarizes the principal findings, conclusions, and recommendations of the TA.

Proposed Development

Provide a description of the land, parcel size and location within the county. Include a vicinity map showing the location of the project site in relation to the surrounding transportation network. The offsite as well as site specific development should be described. This includes a discussion of location, proposed zoning, land use and intensity. A site plan is not necessary within a TA.

Existing Area Conditions

Limits of the study area should be described in this section. The limits shall be mutually agreed to between the applicant and the County. Roadways that provide access to the site are included in this section. Current traffic volume counts should be collected to determine existing traffic conditions in the study area. If the most recent traffic counts available are 3 years old or older, new traffic counts shall be collected. These counts should include average daily traffic within the study area.

Projected Traffic

The main component of the TA is estimating the amount of traffic being generated from a proposed development. A trip generation comparison table showing computational comparison of the maximum possible trips generated from the proposed land uses and the maximum possible trips generated from existing and allowed land uses shall be provided. The latest addition of ITE's *Trip Generation Handbook* provides guidance on how to select between rates and equations when both are available. The national published data provided by ITE should be used as starting points in estimating the amount of traffic by a specific building type or land use. If no trip generation rates nor equations are available from ITE's Trip Generation Manual, traffic counts from similar site(s) should be provided as a basis for trip generation estimates. If no site(s) with similar land uses are available, an analysis of the proposed land use based on the site's capacity may be considered. Include a table summarizing trip generation estimates. Calculate the percentage increase in average daily traffic with the proposed development over the existing traffic.

Findings and Recommendations

Summarize the proposed development, its impacts, and the possible mitigation strategies.

C. Example Outline

Rezoning Transportation Analysis

[Development Title]

Case Number: XX-XXXXXX RZ

Applicant Information

[Name]

[Address]

[Phone Number]

[Email]

Report Author

[Name]

[Address]

[Phone Number]

[Email]

Date of Original Report: XX-XX-XXXX

Date of Revision: XX-XX-XXXX

[Cert Number/Seal and Signature of Certified Transportation Professional (PE, AICP-CTP, ITE-PTP] (If applicable)

Purpose of Analysis

Introduction

The purpose of this Transportation Analysis is to evaluate the potential impacts of the proposed zoning to the surrounding transportation network. If the proposed zoning is approved, the Applicant will be required to submit a Transportation Impact Study to determine specific mitigation measures and must satisfy County Land Development Regulations (LDR) and Transportation Design and Construction Manual Roadway Templates at the time of Site Development Plan (SDP) and/or Preliminary and Final Plat (PF).

Project Overview

[Description of the project site including size, location, current land use, intensity, existing zoning, and proposed zoning. Site plan should not be included in this analysis.]

Study Area

[Description of the study area and impacted roadways and intersections. The study area limits should be described and mutually agreed to between the applicant and the county. The study area should not include roadways proposed interior to the development.]

Existing Roadway System

[Include a description of the study area roadways and intersections including existing traffic counts, lane geometry, posted speed limits, current traffic control at intersections, presence of pedestrian and bicycle infrastructure, availability of on-street parking, and whether a roadway is private or public.]

Projected Transportation Impact

Trip Generation

[Description of publication or methodology used to generate daily and peak hour traffic volumes for the proposed development; trip reduction and internal trip capture rates and pass-by trips not applicable during rezoning]

Table 1: Trip Generation Summary

Trip Generation Summary Table											
Land Use Type /Zoning (Type)	**Land Use Type**	**ITE Code**	**Unit**	**Size**	**Vehicles per day**	**AM Peak**			**PM Peak**		
						In	Out	Total	In	Out	Total
Existing Land Use											

Total											
Existing Maximum* Zoning											
Total											
Proposed Maximum* Zoning											
Total											
Comparison Table											
Zoning Additional Trips (Proposed Zoning Total minus Existing Zoning Total)											

*Maximum potential trip generation based on the existing and proposed zoning

Analysis

[Summarize existing land use/proposed intended land use and existing/proposed zoning trip generation and potential impacts to the transportation network. Provide the percentage increase in average daily traffic (ADT) on adjacent roadways from existing conditions to proposed. Level of Service (LOS) calculations are not required with a TA.]

Existing Land Use/Proposed Intended Land Use

Existing Zoning/Proposed Zoning

Recommendations

[Summarize the anticipated public improvements and strategies and/or recommendations to mitigate potential negative impacts to the transportation network in the study area]

Table 2: Anticipated Public Improvements

Summary of the anticipated public improvements per County Land Development Regulations (LDR) and Transportation Design and Construction Manual Roadway Templates (shoulders, sidewalks, curb and gutter, bicycle infrastructure, etc.) if the zoning is approved and the applicant proceeds to subsequent development processes.

Location	Improvements

Table 3: Potential Mitigation Strategies

Summary of potential strategies and/or recommendations that show an ability to mitigate traffic impacts from the proposed rezoning to the study area.

[List strategies that can address potential impacts of increased trip generation from the proposed zoning. Impacts should be those that are common for the location type and the level of trip generation increase. Recommendations should generally indicate if strategy is feasible at the location indicated.]

Location	Strategy	Recommendation

Appendix

[Insert any data used in analysis]

Trip Generation Calculations

Traffic Counts

A.4 Transportation Impact Study Format:

Introduction and Summary

The purpose of the TIS should be clearly stated. This section should contain an Executive Summary that concisely summarizes the principal findings, conclusions, and recommendations of the TIS.

Proposed Development

Provide a description of the land parcel size, general terrain features and location within the county. Include a vicinity map showing the location of the project site in relation to the surrounding transportation network. The offsite as well as site-specific development should be described. This includes a discussion of land use and intensity, location, site plan and zoning. As required, primary and secondary access to existing streets should be proposed. Construction phasing should be introduced and addressed in this section.

Existing Area Conditions

Limits of the study area should be described in this section. The limits shall be mutually agreed to between the applicant and the County, during the Preliminary Application process or prior to submittal. Roadways that provide access to the site as well as future roadways included in the study area are included in this section. Existing intersections within the study area as well as geometrics and traffic signals should be identified. The existing and proposed land uses of the site should be identified. Current traffic volume counts should be collected to determine existing traffic conditions in the study area. If the most recent traffic counts available are 3 years old or older, new traffic counts shall be collected. These counts should include average daily traffic and intersection peak hour turning movements within the study area.

Background Traffic

Background traffic growth estimates should be based on the most recent regional Travel Demand Model available. Overly conservative projections of background growth will not be accepted. If a growth model is not available for the study area, a reasonable growth rate considering area development potential shall be agreed upon by the applicant and the County during the Preliminary Application process. Growth rates above 2% per year will not be considered.

Trips generated by other approved developments within the study area, that were not included in the traffic counts collected, may be added to the background growth and referenced in the TIS. However, the combined background growth rate from area development and growth modelling shall not exceed an average of 2% per year.

Projected Traffic

One of the most critical elements of the TIS is estimating the amount of traffic being generated. The latest edition of ITE's Trip Generation Handbook provides guidance on how to select between rates and equations when both are available. The national published data provided by ITE should be used as starting points in estimating the amount of traffic by a specific building type or land use. If no trip generation rates nor equations are available from ITE's Trip Generation Manual, traffic counts from similar site(s) should be provided as a basis for trip generation estimates. If no site(s) with similar land uses are available, an analysis of the proposed land use based on the site's capacity may be considered. Include a table summarizing trip generation estimates.

Trip Distribution: The direction from which traffic will access the site can vary depending on many factors such as the type of proposed development and the area which it will attract traffic, surrounding land uses and population and conditions of the surrounding street system. Document the methods and assumptions made in this section.

Trip Assignment: The final product of this process is total project generated trips, by direction and turning movement, on each segment of the TIS area roadway network. The assignment should reflect the horizon years and consider future conditions of the roadway. Typically, the County uses a 3-year projected and 20-year projected traffic volume. Additional horizon years may be necessary depending on proposed phasing.

Internal Trips: Trips captured internally by a proposed development may be applicable depending on the land use. The

internal capture rates used should be based on the current version of the ITE's Trip Generation Handbook.

Pass-by trips: Trip generation analysis yields the number of vehicle trips that a site is expected to generate at its driveways. A percentage of their trips are simply diverted from trips already passing by on the adjacent roadway system. Pass by trips diverted from a roadway should be rechecked if they represent more than 15% of the traffic volume on that roadway. Pass-by trips shall still be applied to the site's driveways and any local roadways between the site and the roadway from which the trips are diverted. Pass-by trip reductions should not be made to the overall trip generation prior to trip assignment.

Transportation Analysis

Capacity analysis is required for each of the major street and site access locations (signalized and un-signalized) within the study area. A clearer understanding of both the transportation related implications of the project and the necessary improvements to ensure acceptable operating conditions should result from this section of the TS. In addition, the following County plans and program and factors shall be considered in the transportation analysis: Major Thoroughfare Plan, Bicycle Plan and Traffic Impact Fee Program.

Factors:

- Safety
- Neighborhood Impacts
- School Zone Traffic Control
- Traffic Control Needs
- Transit Needs or Impacts
- Transportation Demand Management
- Circulation Patterns
- On-site Parking Adequacy and Off-site Parking Facilities
- Pedestrian and Bicycle Movements/Continuity of Facilities
- Other vulnerable roadway users applicable to proposed or nearby land uses
- Service and Delivery Vehicle Access
- Emergency and Fire Apparatus Access

Transportation Safety: The initial review of existing conditions within the TIS area shall include analysis of crash data from the 3 most recent years available. Any intersection experiencing Level of Service of Safety (LOSS) III or IV, or above average crashes on the state-specific Safety Performance Functions, will need additional analysis. The proposed site plan should ensure that the internal circulation system and external access points improve pedestrian and bicyclist safety and minimize vehicle/pedestrian and vehicle/bicyclist conflict points. Additional vulnerable roadway users shall be considered if applicable to a proposed land use or adjacent to existing land uses.

Transportation Operations: Impacts on transportation operations shall be measured based on the definitions contained in the current version of the *Highway Capacity Manual (Transportation Research Board)*. For each analysis period studied (typically 3 and 20 year periods) and for each phase of the project a projected total traffic volume must be estimated for each critical intersection and roadway segment being analyzed. The projected total traffic volumes (consisting of the summation of existing traffic, background growth traffic, background development traffic and site traffic) will be used in the next step-capacity analysis of future conditions.

Signalized Intersections: Level of Service (LOS) is based on roadway system characteristics that include:

- traffic volume
- lane geometry
- percentage of trucks
- peak hour factor

- number of lanes
- signal progression
- ratio of green time to cycle time (G/C)
- roadway grades
- parking conditions
- bicycle and pedestrian flows

The LOS categories are established in the *Highway Capacity Manual*. In general, LOS ratings of A to D are acceptable for the overall intersection and individual movements while E & F ratings must be mitigated. There are a number of software programs that can determine highway capacity.

Unsignalized Intersections: LOS for multi-way stop controlled intersections and driveway intersections must be determined by computing or measuring control delay. Where capacity analysis shows a LOS of D or worse for the overall intersection or any individual movements, mitigation must be provided. Mitigation could be a traffic signal, roundabout, turn restriction, or other measure to improve LOS. An analysis must be completed to determine the proposed measure mitigates the failing LOS. Any proposed all-way stop intersection must be justified using MUTCD's guidance on multi-way stop applications. Any newly signalized intersections must be justified using MUTCD Warrant 2 (Four-Hour Vehicular Volume). Alternatively, Warrant 3 (Peak Hour Volume) may be evaluated only if the unusual cases as defined in the MUTCD apply.

Roundabouts: In cases where LOS analysis indicates that an unsignalized intersection is expected to be LOS D or worse, a roundabout will be assessed before consideration will be given to a proposed signalized or multiway stop intersection. Factors for consideration of a roundabout include:

- availability of right-of-way
- crash history or potential
- traffic volume
- lane geometry
- number of lanes
- roadway grades
- parking conditions
- bicycle and pedestrian flows
- level of service

Each proposed location for a roundabout will be evaluated on a case by case basis. The capacity of a roundabout must be evaluated, and appropriate analytical software programs shall be utilized.

Parking: Utilizing ITE's Parking Generation Manual as a starting point, provide an estimate of how much parking the proposed development will generate. Parking utilization rates from similar sites may aid in this analysis.

Queueing: Provide an analysis of projected 95th percentile queues to determine adequacy of existing and proposed turn lane storage lengths, and whether any through-queues block adjacent intersections.

Improvement Analysis

The improvements required to accommodate existing, background and site generated traffic are summarized in this section. Intersections serving the development should be analyzed first. The analysis should include the following steps:

- Identification of critical movements and corresponding intersection approaches.
- Determine if the intersection needs new types of traffic control such as roundabout, signalization or multi-way stop control.

- Evaluation of each critical movement under potential scenarios of adding lanes, altering signal phasing, signal timing or lane use.
- Evaluation of signal locations, phasing and timing, with particular emphasis on corridor signal progression.
- Evaluation of queue lengths for both turn and through lanes to ensure adequate storage space.
- Identification of potential improvements within the contexts of Right-of-Way availability, intersection spacing, signal progression, County design standards and practical feasibility.

Findings & Recommendations

Summarize the proposed development, its impacts, and the proposed mitigation measures.

C. Example Transportation Impact Study Outline

Transportation Study

[Development Title]

Case Number: XX-XXXXXX SD/PF

Applicant Information

[Name]

[Address]

[Phone Number]

[Email]

Report Author

[Name]

[Address]

[Phone Number]

[Email]

Date of Original Report: XX-XX-XXXX

Date of Revision: XX-XX-XXXX

[Seal and Signature of Colorado Professional Engineer]

Page Break

Executive Summary

Table of Contents

List of Figures

List of Tables

Purpose of Analysis

Proposed Development

Project Location

[Insert vicinity map showing the location of the project site in relation to the surrounding transportation network]

Project Overview

[Description of the site including size, location, land use, intensity, existing zoning, proposed zoning, access locations and proposed development phasing.]

Existing Area Conditions

[Include diagrams and narrative of traffic counts collected]

Background Traffic

[Include reference to source Travel Demand Model, any nearby developments considered, and diagrams of 3-year and 20-year projections]

Projected Traffic

Trip Generation

[Description of publication or methodology used to generate daily and peak hour traffic volumes for the proposed development including any trip reduction considerations, internal trip capture rates and pass-by trips as applicable]

Trip Generation Summary

[Table including land use, intensity, ITE Code, daily traffic volume, peak hour: in, out and total traffic volumes.]

Trip Distribution

Pass-by Trips (if applicable)

Trip Assignment

3-Year Horizon

20-Year Horizon

Transportation Analysis

Level of Service

[LOS diagrams at all study area intersections]

Safety

[LOSS Analysis]

Intersection Controls

[Roundabout analysis, signal- or all-way-stop-warrant analysis]

Parking

[Include parking generation and availability]

Queueing

[Queueing analysis at study area intersections]

Improvement Analysis

[Describe any improvements needed to mitigate impacts]

Conclusion and Recommendations

[Summarize the proposed development including site location, proposed accesses, and trip generation.]

Appendices

Site Plan

Traffic Counts

Growth Calculations

Nearby Development Trip Estimates*

Trip Generation Sheets

LOS Worksheets (Synchro or equivalent)

Roundabout Analysis*

Signal and/or All-Way Stop Warrants*

LOSS Worksheets

Parking Generation Sheets

Queueing Analysis Worksheets

Signal Progression Analysis*

*as applicable

LAND DEVELOPMENT REGULATION SECTION 15 – CLEAN COPY

Section 15 - Circulation

(orig. 7-12-05)

A. Planning Standards

1. Street/Road Standards: Plans for streets/roads shall be prepared in accordance with the Jefferson County Transportation Design and Construction Manual and shall be approved by Planning and Zoning prior to plat recordation. (am. 7-12-05; am. 5-20-08; am.11-24-15)

   a. Rights-of-Way for public streets/roads, easements for private streets/roads, and emergency access easements shall be granted, conveyed and transferred in accordance with the following: (reloc. 7-12-05; am. 7-17-18)

      (1) Public Street/Road System:

         (a) The fee simple property owner shall be required to dedicate rights-of-way for the following: (am. 7-12-05; am. 7-17-18)

            (a-1) Streets/roads shown on the current Major Thoroughfare Plan within or adjoining the subdivision. (reloc. 7-12-05)

            (a-2) Proposed public streets/roads within the subdivision. (reloc. 7-12-05)

            (a-3) Proposed public streets/roads that connect the subdivision to existing County, state or city maintained streets/roads. (reloc. 7-12-05)

            (a-4) Existing public streets/roads, not previously dedicated, that are within or adjoining the subdivision. The dedication requirement for adjoining streets shall be for the adjoining one-half of the street, and for any portion of the opposite one-half of the street which is under the ownership of the developer. (reloc. 7-12-05; am. 7-17-18)

            (a-5) Turn lanes, speed change lanes and tapers along adjoining property or properties required for construction and safe operation of intersections and new street/road facilities for the proposed subdivision. (reloc. 7-12-05)

         (b) Rights of way for public streets/roads within the boundaries of the subdivision shall be dedicated to Jefferson County in accordance with the Dedication Certificate provisions in the Final Plat Section of this regulation. (orig. 7-17-18)

         (c) Rights of way for public streets/roads exterior to the subdivision boundaries shall be conveyed to the County of Jefferson, in fee simple by general warranty deed, or another type of deed in a form acceptable to the Office of the County Attorney. Unless otherwise approved by the Office of the County Attorney, rights of way shall be free of all encumbrances, including, without limitation, liens, easements, and deeds of trust. (orig. 7-17-18)

      (2) Private Street/Road Systems:

         (a) The provision of access by private streets/roads shall only be permitted if the following applies: (reloc. 7-12-05)

            (a-1) The developer has taken all actions necessary to ensure perpetual access for the benefit of each lot, tract or parcel, and to ensure that the private street/road system within the subdivision is maintained. (reloc. 7-12-05; am. 5-20-08)

            (a-2) The developer has acquired sufficient rights, title, and interest in adjoining property to construct an exterior street/road system to connect the subdivision to public streets/roads to ensure perpetual access to each lot, tract or parcel, and establish permanent maintenance of the private streets/roads. (reloc. 7-12-05)

            (a-3) Access to adjoining properties is not necessary unless required pursuant to A.1.c.(5). (am. 7-12-05; am. 7-17-18)

         (b) Each private street/road within the subdivision boundary shall be designated as a "Utility, Drainage and Emergency Access Easement" on the plat. This Utility, Drainage and

Emergency Access Easement will be dedicated to Jefferson County in accordance with the Dedication Certificate provisions in the Final Plat Section of this regulation. (orig. 7-17-18)

(3) Exterior Emergency Access Easements:

(a) Emergency Access Easements shall be conveyed to Jefferson County for required exterior emergency access connections where the developer does not have the necessary rights to ensure perpetual access for the benefit of each lot, tract or parcel within the development boundary. (am. 7-17-18)

(b) Emergency Access Easements shall be conveyed to Jefferson County by easement deed in a form acceptable to the Office of the County Attorney. The following shall apply to the dedication of the Emergency Access Easements: (am. 7-17-18)

(b-1) The easement shall be for emergency and service vehicle access, and drainage and utility purposes. (orig. 7-17-18)

(b-2) The easement shall not obligate the County to provide maintenance services. (am. 7-17-18)

(b-3) The easement deed shall expressly state that it conveys to the County an easement for each of the following purposes: (i) passage of service vehicles and passage of all vehicles and pedestrians during an emergency; (ii) drainage; and (iii) utilities. (am. 7-12-05; am. 7-17-18)

(b-4) The easement shall be from the fee simple property owner or the owner of a prior easement that expressly provides that it can be assigned or conveyed to the County. (orig. 7-17-18)

(4) Public street/road right-of-way widths and private street/road easement widths shall be provided in accordance with the templates in the Transportation Design and Construction Manual. Additional rights-of-way/easements may be required at locations such as, but not limited to, round-abouts, interchanges, acceleration, deceleration, turn or climbing lanes, cut and fill slopes, sidewalks, trails, medians, traffic signs, and drainage structures, and for maintenance. (reloc. 7-12-05; am. 11-24-15; am. 7-17-18)

b. Street/Road Design

(1) Streets/roads, whether public or private, shall be designed in accordance with the current American Association of State Highway and Transportation Officials (AASHTO) Standards unless modified by the Jefferson County Transportation Design and Construction Manual. (reloc. 7-12-05; am 11-24-15)

(2) Paving of streets/roads within the proposed development and streets/roads connecting the proposed development with other County, state or city paved streets/roads shall be in accordance with the following: (reloc. 7-12-05; am. 12-5-06)

(a) New street/roads to be maintained by the County, state or city shall be constructed to the appropriate public street/road template standard, which includes paving. (orig. 12-5-06)

(b) Existing unpaved County maintained streets/roads shall be constructed to the appropriate public template standard (which includes paving) for a length that is equal to the development impact on the street/road system. For residential development, the development impact shall not exceed a maximum of 4% per lot. If the development impact to a street/road exceeds 80%, then paving for the entire length will be required. The impact on a street/road system will be determined using the following formulas. (reloc. 7-12-05; am. 12-5-06)

Development Impact (%) = Proposed ADT / (Existing ADT + Proposed ADT)

Paving Requirement = Length of Unpaved Section X Development Impact (%)

- Length of Unpaved Section is the distance from the development access point(s) to the paved street/road. (orig. 12-5-06)
- Proposed ADT is the number of trips generated by the proposed development. (orig. 12-5-06)

- Existing ADT is the number of actual trips on the street/road. Existing ADT shall be determined using a traffic counting device located on the gravel portion of the street/road immediately adjacent to the paved section. (orig. 12-5-06)

(c) Should the County choose to accept a cash-in-lieu of construction payment for the paving requirement, the required paving contribution shall be calculated using following:

- Appropriate public street/road template width
- Minimum 5" full depth asphalt surface
- Current County cost for asphalt in place at the development location

The County shall use the cash-in-lieu of construction monies for any improvement on the street/road as deemed necessary or desirable by the County. (orig. 12-5-06)

(d) All private roads and all non-maintained roads in County right-of-way shall be paved if the sum of the existing and proposed ADT on the roads exceeds 150. The paving requirement will apply to that portion of the roads that exceeds 150 ADT (reloc. 7-12-05; am. 12-5-06)

(e) All private streets shall be paved. (orig. 7-17-18)

c. Patterns: Street/road patterns shall be planned consistent with the dedication and design requirements and the following: (reloc. 7-12-05)

(1) Street/road patterns shall induce traffic flow appropriate to the function of the streets/roads. Long, straight and other local street alignments conducive to speeds in excess of 30 M.P.H. shall be avoided. In areas where that is not possible traffic calming measures such as bump outs, neckdowns shall be incorporated at approved intervals to effectively slow down design speeds. (reloc. 7-12-05; am. 7-17-18)

(2) Cul-de-sacs may be used when meeting the following criteria:

(a) Does not exceed 1 mile in length and serves no more than 30 existing plus proposed single family residential units (including platted lots) or obtain approval from Planning and Zoning for alternate standards that provide acceptable fire protection and safety mitigation measures concerning access and water. (orig. 11-24-15; am. 7-17-18; am. XX-XX-XX)

(b) Serves no more than 100 multi-family units or obtain approval from Planning and Zoning for alternate standards that provide acceptable fire protection and safety mitigation measures concerning access and water. (orig. 11-24-15; am. 7-17-18; am XX-XX-XX)

(c) Cul-De-Sac length is measured from the maximum street/road length of the developable lot within the proposed subdivision to the beginning of the cul-de-sac. (orig. 7-17-18)

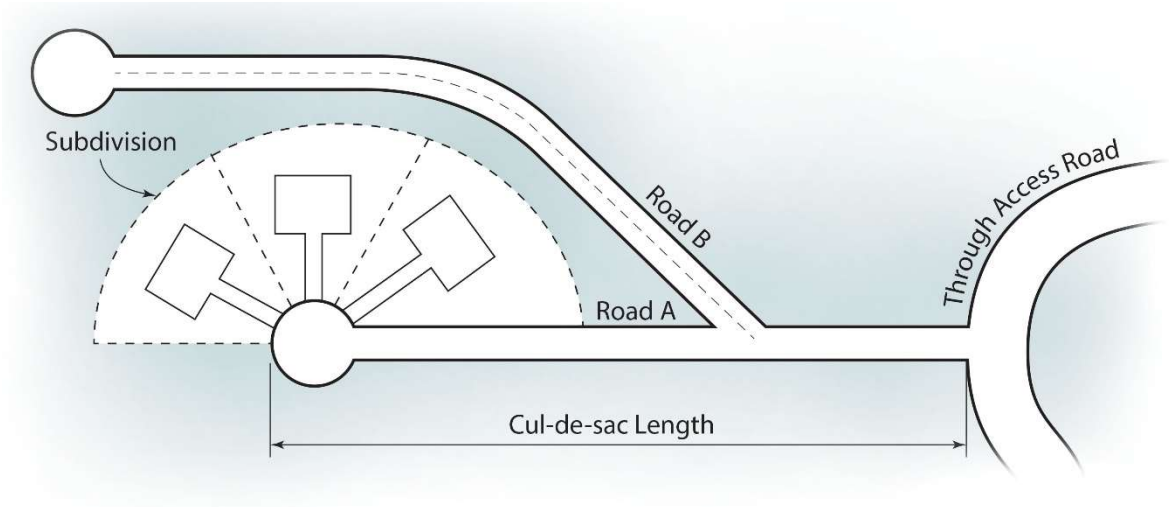

(3) Streets/roads shall be planned and designed to minimize grading and scarring of the terrain, and not create erosion and drainage problems. (reloc. 7-12-05)

(4) Streets/roads shall be continuous and conform in alignment and grade with existing, planned or platted streets/roads with which they are to connect. (reloc. 7-12-05)

(5) Streets/roads shall extend to the subdivision boundary lines as deemed necessary by Planning and Zoning for the connection with adjacent lands. Public streets/roads so extended shall be dedicated as collector streets/roads unless a template for a local street/road is approved by Planning and Zoning. Private streets/roads may be extended to the subdivision boundary provided said private streets/roads are equivalent to public streets/roads for the connection with adjacent lands, if approved by Planning and Zoning (reloc. 7-12-05; am. 5-20-08; am. 7-17-18)

(6) Streets/roads that extend to the boundary line shall be provided with a turn-around. Temporary portions of the turn-around shall be labeled as tracts to facilitate the ultimate reversion of the same. If lots are not dependent upon the extended streets/roads for access, the right-of-way, not including a turn-around, shall be dedicated, but construction of the extended street/road will not be required. (reloc. 7-12-05)

(7) Streets/roads shall intersect one another at right angles or as nearly at right angles as topography and other limiting factors permit. (reloc. 7-12-05)

(8) Intersection spacing shall conform to the Jefferson County Transportation Design and Construction Manual. (am. 7-12-05; am. 5-20-08; am. 11-24-15; am. 7-17-18)

(9) Traffic calming physical devices, such as speed bumps and raised crosswalks shall require approval from the fire protection district and conform to current County policies and procedures. All other traffic calming devices are considered non-physical devices, such as bumpouts, pedestrian refuges and the like, are allowed subject to approval by Planning and Zoning. (orig. 11-24-15)

(10) Subdivisions shall have a street/road system that provides primary and secondary access to existing County, state or city maintained streets/roads, except that secondary access is not required for developments with access provided it meets the cul-de-sac requirements as set forth in this Section. The minimum distance between the centerlines of the primary and secondary access streets/roads shall be in accordance with the spacing provision. The provision of emergency access in-lieu of secondary access shall only be permitted if the following applies: (am. 7-12-05; am. 11-24-15)

(a) Secondary full-time access is not needed for transportation operations and maintenance and level of service to provide appropriate vehicular access and circulation control. (am. 7-12-05; am. 7-17-18)

(b) The developer has taken or agrees to take all actions necessary to ensure that an emergency access has been dedicated to the County and that an emergency access system is maintained. (reloc. 7-12-05)

(c) The developer has taken or agrees to take all actions necessary to ensure that the emergency access will be closed always, except during emergency situations, to vehicle traffic. (reloc. 7-12-05)

(d) The applicable fire protection district has approved the plans for the emergency access facilities and appurtenances thereto. (reloc. 7-12-05)

(e) Access to adjoining properties is not required pursuant to A.1.c.(5) of this Section. (am. 7-12-05; am. 7-17-18)

(f) The emergency access street/road is designated as an "Emergency Access Easement" on the plat and the developer has complied with A.1.a.(2)(b) and A.1.a.(3) of this Section for any portion of the emergency access system exterior to the subdivision. (am. 7-12-05)

d. Names: Streets/roads shall be named in accordance with the following: (reloc. 7-12-05)

(1) Plains: Names of all streets shall be in full conformance with the metropolitan grid system as shown on the Official Jefferson County Base Maps. (reloc. 7-12-05)

(2) Mountains: Names of all roads shall be sufficiently different from previously adopted road names. (reloc. 7-12-05)

e. Street/Road Improvements: Street/road improvements shall be provided for the following: (reloc. 7-12-05)

(1) Streets/roads interior to the development. (reloc. 7-12-05)

(2) The adjoining one-half of contiguous arterial, collector and local streets/roads including streets/roads adjoining park and school lands created by the plat. (reloc. 7-12-05; am. 7-17-18; am. XX-XX-XX)

(3) If existing pavement on the opposite one-half of the street/road does not match with and tie to the required pavement section on the adjoining one-half, then a pavement overlay on part of the opposite one-half shall be required. If the existing pavement cross section is higher than the approved pavement cross section, then the existing pavement on the opposite one-half shall be adjusted or reconstructed to the approved height. (reloc. 7-12-05; am. 7-17-18)

(4) If the opposite side one-half of the street/road is not paved to current Jefferson County standards or does not exist, the developer shall be responsible for a 24-foot total pavement width plus the opposite side shoulder. If existing pavement on the opposite one-half of the street/road does not match with and tie to the required pavement section on the adjoining one-half, then a pavement overlay on part of the opposite one-half shall be required. If the existing pavement cross section is higher than the approved pavement cross section, then the existing pavement on the opposite one-half shall be adjusted or reconstructed to the approved height. (reloc. 7-12-05; reloc. 7-17-18)

(5) Street(s)/road(s) connecting the subdivision with existing Jefferson County, state or city maintained street(s)/road(s). The pavement width of the connecting street/road shall be the same as the street(s)/road(s) within the subdivision with which they connect. Shoulders shall be provided if curb/gutter and sidewalks are not required. (reloc. 7-12-05)

(6) ADA ramps shall be provided including the appropriate receiving ramp even if the entire construction is not adjoining the property. (orig. 7-17-18)

f. Applicants shall not be required to comply with A.1.e.(2), A.1.e.(3) and A.1.e.4 regarding adjoining street/road improvements when: (am. 7-12-05; am. 7-17-18)

(1) The proposed ADT is less than 50 where access is proposed to an existing paved street/road. (reloc. 7-12-05)

(2) The sum of the existing ADT plus the ADT from the proposed development will not exceed 150 where access is proposed to an existing gravel street/road. (reloc. 7-12-05)

2. Driveway Standards: Access from a street/road to 1 residential lot, tract, parcel or structure, or to 1 nonresidential lot, tract, parcel or structure shall meet or exceed the standards set forth below. Access to 2 or more residential or nonresidential lots, tracts, parcels or structures shall be provided by a street/road that conforms to the requirements of this Regulation. (am. 7-12-05; am. 5-20-08; am. 11-24-15)

a. Driveways within the lots/tracts shall be provided from the property line to the building site without: (reloc. 7-12-05)

(1) Creating erosion or drainage problems. (reloc. 7-12-05)

(2) Crossing sewage disposal leaching fields. (reloc. 7-12-05)

b. Driveway design shall facilitate all emergency vehicle movement. (reloc. 7-12-05)

c. Access shall be provided within residential and nonresidential areas to adjoining residential and nonresidential areas respectively as required by Planning and Zoning when such provisions would reduce or limit access onto a street/road. (am. 7-12-05; am. 4-4-06; am. 5-20-08; am. 12-21-10)

3. Curb and Gutter Standards: Curb and gutters or ditches shall be provided for subdivisions in the plains areas in accordance with the Jefferson County Transportation Design and Construction Manual and the following: (reloc. 7-12-05; am. 11-24-15)

a. 6” vertical curb and gutter (with detached sidewalk) or a 4-inch mountable curb and gutter (with attached or detached sidewalk) shall be provided along all local streets, unless otherwise approved by Planning and Zoning. (am. 7-12-05; am. 4-4-06; am. 12-21-10; am. 7-17-18)

b. A 6-inch vertical curb and gutter shall be provided along all collector and arterial streets and along

all streets adjoining public and semipublic tracts and multifamily and nonresidential lots. (reloc. 7-12-05)

c. Ditches may be provided along streets in lieu of curb and gutters where all of the following criteria are met: (reloc. 7-12-05)

(1) Streets are classified as local or collector (ADT less than 8,000). (reloc. 7-12-05; am. 7-17-18)

(2) Street grades are no less than 2 percent and no greater than 4 percent. (reloc. 7-12-05)

(3) Minimum lot frontage is 100 feet. (reloc. 7-12-05)

d. Planning and Zoning may approve roadside ditches in lieu of curb and gutter if it is determined that the curb and gutter cannot be designed to drain properly or if it will cause drainage problems in the area. (orig. 7-17-18)

4. Sidewalk Standards: Sidewalks shall be provided for developments in the Plains area in accordance with the Jefferson County Transportation Design and Construction Manual and the following: (reloc. 7-12-05; am 11-24-15; am. 7-17-18)

a. A 5-foot wide sidewalk (with combination curb and gutter) or a 5-foot wide detached sidewalk or trail shall be provided along local streets adjoining residential developments, unless otherwise approved by Planning and Zoning. (am. 7-12-05; am. 4-4-06; am. 12-21-10; am 11-24-15; am. 7-17-18)

b. A 5-foot attached or detached sidewalk shall be provided along all local and collector streets adjoining nonresidential and multifamily developments. (am. 7-12-05; am. 4-4-06; am. 12-21-10; am 11-24-15; am. 7-17-18)

c. A 6-foot wide detached sidewalk shall be provided along all minor arterial and major collector streets. (orig. 11-24-15)

d. An 8-foot wide detached sidewalk shall be provided along all principal arterial and parkway streets. (am. 7-12-05; am. 4-4-06; am. 11-24-15; am. 7-17-18)

e. Curb ramps shall be provided at all intersections. Mid-block ramps shall be provided at all "T" intersections. Mid block pedestrian ramps should be considered where there is an adjacent pedestrian path. (reloc. 7-12-05; am. 7-17-18)

f. Sidewalk easements shall be provided and dedicated when the sidewalk is not within a dedicated street right-of-way. (reloc. 7-12-05)

g. Adjacent bus stops shall be upgraded to comply with current RTD bus stop requirements. (orig. 7-17-18)

5. Traffic Signal Contributions:

a. A contribution toward a future traffic signal will be required if the following conditions are met:

(1) The development generates over 1000 average daily trips or 100 trips in a peak hour period; and (orig. 7-17-18)

(2) The Transportation Study indicates that an intersection internal, adjacent or within 500 feet of the development will satisfy the MUTCD Peak Hour Warrant or Four Hour-Warrant within 20 years. (orig. 7-17-18)

If the above conditions are met, then the applicant shall provide a contribution representing the proportional percentage of the site that is within 500 feet to the intersection requiring future traffic signal improvements. For illustrative purposes only, if the site is at the corner of one quadrant of the intersection the contribution shall be 25% of the traffic signal for the intersection. The contribution should be a cash-in-lieu payment, which will be returned to the applicant if conditions change or the traffic signal is no longer warranted within the original 20-year period. (orig. 7-17-18)

B. Construction Specifications

1. Street/Road and Curb/Gutter/Sidewalk Standards: Construction shall be in accordance with the approved Plans and meet the criteria of the Jefferson County Transportation Design and Construction Manual. (am. 7-12-05; am. 12-21-10; am. 11-24-15)

ZONING RESOLUTION SECTION 2 – CLEAN COPY

Section 2 - General Provisions and Regulations

(orig. 7-28-58; am. 2-6-84; am 7-1-03)

A. Amendment of Underlying Zones

Any amendment to any underlying conventional zone district, including the Planned Development Zone District, shall in no way supersede or except any existing or subsequently adopted overlay district. (orig. 6-15-76)

B. Modification of Lots or Structures

No lot, or any structure thereon, shall be modified in any way which will not conform to the applicable zone district regulations, except: (orig. 7-28-58; am. 9-6-77)

1. Where the Board of Adjustment, within its authority, grants a variance; or (orig. 7-28-58)
2. Where the Director of Planning and Zoning grants an administrative exception; or (orig.7-17-18)
3. Where a portion of property has been acquired by an authorized public entity. (orig. 7-28-58; am. 9-6-77)

C. Structures Per Lot

1. Every building shall be constructed and located on a single lot or combination of lots that have been merged, and no lot shall have more than 1 main building, except as otherwise provided by this Zoning Resolution. (orig. 7-28-58; am. 9-6-77; am. 3-26-13)
2. One or more main non-residential or multi-family structures per lot are allowed pursuant to the requirements of the Land Development Regulation or the Policies and Procedures Manual. (orig. 3-8-82; am. 6-14-88; am. 12-17-02)
3. Delineation of building envelopes is not required for accessory buildings, provided that all easements and applicable setbacks are observed. (orig. 6-14-88)
4. No structure shall be placed on a zone district line where such line crosses any portion of a property except where both zone districts would allow the use, and where both zone districts have the same setback limitations. (orig. 7-1-03)

D. Permit Requirements

1. Building Permit
   a. It shall be unlawful for any person, firm or corporation to erect, construct, reconstruct or structurally alter any building or other structure without first obtaining both of the following: (orig. 5-6-46; am. 12-26-62; am. 9-6-77; am. 8-6-80; am. 5-3-94)
      (1) Zoning approval from Planning and Zoning including payment of a nonrefundable processing fee in an amount established by the Board of County Commissioners. (orig. 5-3-94; am. 5-25-04; am. 5-20-08)
      (2) A Building Permit from Building Safety. (orig. 5-3-94; am. 5-25-04)
   b. A Building Permit shall not be issued unless the lot or parcel is a proper division of land in accordance with Section 30-28-101(10) et. seq. C.R.S., as amended, unless it is the result of a process that has been exempted from the term “subdivision” and “subdivided land” by the Board of County Commissioners. (orig. 4-20-10)
   c. A Building Permit shall not be issued unless the plans and the use conform to this Zoning Resolution and are approved by Planning and Zoning and Building Safety. (orig. 5-6-46; am. 12-26-62; am. 9-6-77; am. 5-25-04; am. 5-20-08)
   d. A Building Permit shall not be issued for properties with the following situations:
      (1) Multiple, unmerged lots or parcels are utilized in order to meet minimum zoning requirements for lot size or the Public Health requirements at the time of permit application; (orig. 6-15-04; am. 10-13-09; reloc. and am. 7-17-18)
      (2) Underlying setback(s) cannot be met from interior property line(s) and multiple lots are utilized as part of permit process; (orig. 6-15-04; reloc. 7-17-18)

(3) A well is located on a separate lot or parcel where multiple lots or parcels are required to meet minimum zoning requirements at the time of permit application; (orig. 6-15-04; reloc. 7-17-18)

(4) An accessory structure proposed on an adjoining lot where the primary structure is located on a separate lot; or (orig. 6-15-04, am. 10-25-05; reloc. 7-17-18)

(5) An Onsite Wastewater Treatment System is located on a separate lot or parcel where multiple lots or parcels are used in combination to meet minimum zoning requirements at the time of permit application. (orig. 6-15-04; am. 10-25-05; reloc. 7-17-18)

e. Any building, structure or use which is not in compliance with the plans or use approved by Planning and Zoning shall constitute a violation of this Zoning Resolution. (orig. 6 14 88; am. 5-25-04; am. 5-20-08)

f. The owner, at the time of issuance of the Building Permit, and the person to whom the permit is issued shall be responsible for compliance with all setback requirements set forth in this Zoning Resolution for the building or structure covered by the permit. (orig. 9-6-77)

g. An Improvement Location Certificate (ILC), stamped by a registered surveyor, licensed in the State of Colorado, shall be required as a site plan for all Building Permits for new or replacement structures, or modifications to the footprint of existing structures. (orig. 7-17-18; am. 1-28-25)

(1) However, an Improvement Survey Plat (ISP) shall be required in lieu of an ILC as a submittal item when reduced setbacks for the proposed structure were approved by either the Director of Planning and Zoning, or the Board of Adjustment. (orig. 7-17-18)

(2) The ILC must show the structure(s) on adjacent properties when the zone district specifies a minimum separation between buildings. (orig. 7-17-18)

h. Verification of Setbacks Requirements (orig. 7-17-18):

(1) A Setback Verification Form, certified by a registered surveyor, licensed in the State of Colorado, shall be submitted to Planning & Zoning upon completion of concrete/foundation form placement, and prior to sheathing for Building Permits under the following conditions: (orig. 7-17-18; am. 1-28-25)

(a) Where a planned setback for a detached accessory structure is less than 3 feet in the Plains areas or 5 feet in Mountain areas from the required setback for the applicable zone district; or (orig. 7-17-18)

(b) Where a planned setback for an addition to a primary structure is less than 3 feet in the Plains areas or 5 feet in Mountain areas from the required setback for the applicable zone district; or (orig. 7-17-18)

(c) Reduced setbacks for the proposed structure were approved by either the Director of Planning and Zoning, or the Board of Adjustment. (orig. 7-17-18)

(2) For Building Permits for new primary structures where a setback verification form is not required, and where a proposed setback is less than 3 feet in the Plains area or 5 feet in the Mountain areas from the required minimum setback for the applicable zone district, prior to the rough framing inspection, an Improvement Location Certificate, certified by a registered surveyor, licensed in the State of Colorado, shall be submitted to Planning & Zoning to verify that the required setbacks are being met. (orig. 7-17-18)

i. Fire Protection: A written statement from the appropriate fire protection district, indicating that the property, for which the Building Permit is applied for, is within the boundaries of the fire protection district, and will be served by said fire protection district. If the property is not located within a fire protection district, a written statement from a local government indicating that they will provide service to the property shall be required. (orig. 1-18-22; am. 1-28-25)

(1) The above written statement shall be submitted for new structures, additions of any size, accessory dwelling units, commercial permits and any changes that modify roads or gates. The following shall be exempted from this requirement: (Orig. 1-28-25)

(a) Residential interior remodels with no additional square footage, and; (orig. 1-28-25)

(b) Outdoor decks associated with residential structures. (orig. 1-28-25)

j. Access Standards: Before any Building Permit for a new dwelling, commercial building, industrial building, or other main building, or to replace an existing dwelling, commercial building, industrial building, or other main building, or for additional space of 400 square feet or more, measured cumulatively, may be issued, the applicant must meet the access requirements listed below. These access standards shall be deemed to be general standards that supersede conflicting provisions in any Official Development Plan. (orig. 9-6-77; am. 12-5-95; am. 12-17-02; am. 5-20-08, am. 4-20-10)

(1) Right of Access: Evidence must be submitted demonstrating that the applicant has a right of access to a county, state or city maintained street/road. If the applicant's property does not have direct access to a county, state or city maintained street/road, then the offsite portion of the access that connects to the county, state or city maintained street/road must be in conformance with one or more of the following: (orig. 12-5-95; am. 12-17-02; am. 7-1-03; am. 10-25-05; am. 5-20-08; am. 4-20-10)

(a) Right-of-way that has been dedicated and accepted by the county, the state or a city, but is not maintained by the county, the state or a city. (orig. 4-20-10)

(b) Right-of-way that has been dedicated to the county or the public, but has not been accepted by the county, and is not maintained by the county, the state or a city. (orig. 4-20-10)

(c) A recorded easement that gives the applicant a right of use. Planning and Zoning will review the access information provided by the applicant and information of public record, to determine the apparent right to use the access easement. Planning and Zoning is not making a legal determination as to the right of the use, only a determination that the access is sufficient for the issuance of a building permit. (orig. 4-20-10)

(d) A declared access from a recorded court decree that gives the applicant a right of use. (orig. 4-20-10)

(e) An existing access across privately owned property that has been declared a "road of record" by the Director of Planning and Zoning. The Director of Planning and Zoning's determination of a "road of record" is a determination of an apparent right to use the access for the purpose of issuing the building permit, not a legal determination as to the right of the use. The Director of Planning and Zoning may declare an access a "road of record" if it meets the following criteria: (orig. 4-20-10; am. 3-3-15)

(e-1) The access serving the parcel has been used for at least twenty (20) consecutive years. (orig. 4-20-10)

(e-2) The access does not cross property owned by a public entity or other entity over which prescriptive rights cannot be established. (orig. 4-20-10)

(e-3) The applicant has made a reasonable attempt to obtain an access easement or other acceptable legal right to use the access road and has been unsuccessful. (orig. 4-20-10)

(f) Any access right that is not identified above but is deemed sufficient by the County Attorney's Office for the purpose of issuing a building permit. An example of when this provision may be used would be when an access crosses property that is owned by a public entity or other entity over which prescriptive rights cannot be established, and a letter of authorization for such access road is provided by such entity. (orig. 4-20-10)

(2) Right of Access Width: The right of access width must comply with the roadway standards of the Transportation Design and Construction Manual. The Transportation Design and Construction Manual standards for widths of streets/roads and driveways is established based on the existing and/or potential use of the access system. (orig. 12-5-95; am. 12-17-02; am. 7-1-03; am. 10-25-05, am. 4-20-10; am. 11-24-15; am. 7-17-18; am XX-XX-XX)

(3) Physical Location of Access: The physical location of the access must closely align with the described limits of the right of access. If the right of access is based on a centerline description, then the centerline of the physical access shall be located along the centerline description. The evaluation of the physical location of the access shall be completed to a point where the street/road connects to a county, state or city maintained street/road. Planning and Zoning will review the physical location of the access based on documents provided by the applicant, information of public record and with the use of cartographic information. If necessary to locate and clarify access, a survey may be required. Planning and Zoning is not making a legal determination as to the location of the street/road with respect to the right of access. The provisions of this section do not apply if the right of access is a ”road of record”. The provisions of this section may be determined not to apply to an alternate right of access approved by the County Attorney’s Office. (orig. 4-20-10)

(4) Physical Standard of Access: The evaluation of the physical access shall be completed both on-site and off-site to a point where the street/road or driveway connects to a county, state or city maintained street/road. For the evaluation of the physical access standards, different requirements are established for the different building permit types as listed below: (orig. 12-5-95; am. 6-18-02; am. 12-17-02; am. 10-25-05; am. 5-20-08; am. 4-20-10; am. 11-24-15; am. XX-XX-XX)

(a) All Building Permits (except those for additions or non-habitable detached structures): The applicant’s design engineer must evaluate the access, and identify any necessary improvements to bring the access into compliance with the standards of the Transportation Design and Construction Manual. The Transportation Design and Construction Manual standards for streets/roads and driveways is established based on the existing and/or potential use of the access system. (orig. XX-XX-XX)

(b) Building Permits for additions, residential interior remodels, or non-habitable detached structures: The applicant shall provide a letter from the Fire Protection District indicating if the existing access is acceptable. The Fire Protection District may add conditions to the acceptance of access as deemed necessary. (orig. XX-XX-XX)

The Transportation Design and Construction Manual details the relief process for any street/road or driveway that cannot meet the applicable access standards. (orig. XX-XX-XX)

(5) Previous Review of Access: If the property for which the building permit is sought has gone through an approved Rezoning, Special Use, Plat, Exemption, Minor Adjustment, Site Development Plan, Grading Permit, or Notice of Intent subsequent to April 20, 2010, then the access verification that occurred during that process shall be deemed sufficient for the building permit process, unless the access being proposed for the building permit is not consistent with what was previously reviewed or the access standards of this section have been revised subsequent to the approval of the application. For Rezoning and Special Use applications, if the provisions of the Physical Standard of Access were not reviewed during the process, then those provisions must be satisfied prior to the issuance of the building permit. (orig. 4-20-10)

2. Miscellaneous Zoning Permit

a. It shall be unlawful for any person, firm or corporation to erect, construct, reconstruct, structurally alter any building or structure, and/or commence any of the following activities without first obtaining a Miscellaneous Zoning Permit. The permit shall be valid for one year, all work must be completed within this time frame or a new or renewal permit will be required. Planning and Zoning may request documentation to ensure compliance with the regulations. (orig. 5-3-94; am. 3-28-00; am. 5-25-04; am. 5-20-08; am. 3-26-13)

(1) Any structure not requiring a Building Permit, including but not limited to entry features, gazebos, retaining walls over 36 inches in height, decks less than 30 inches but greater than 12 inches in height, chicken coops, and beehives. (orig. 5-3-94; am 3-28-00; am. 12-17-02; am. 3-26-13; am 5-10-22)

(a) Mini-structures that are less than 200 square feet, 14 feet or less at the peak, and do not house livestock do not require a permit (orig. 5-10-22)

(2) Recreation facilities, including but not limited to tennis courts, swimming pools, playgrounds, and golf courses. (orig. 5-3-94; am. 7-17-18)

(3) Broadcasting and receiving devices, including but not limited to private satellite dishes over 18 inches in diameter, television and/or radio towers, cellular towers, antenna, and ham radio towers. (orig. 5-3-94; am. 3-28-00; am. 12-17-02)

(4) Temporary structures not requiring a Building Permit, including but not limited to sales and/or security trailers, temporary buildings and/or facilities, and mobile homes. Temporary uses and/or structures, including but not limited to fireworks stands, Christmas tree sale lots, parking lot sales and seasonal produce and/or flower stands. (orig. 5-3-94; am 5-10-22)

(5) Home occupations as outlined in the Home Occupations Section of this Zoning Resolution. (orig. 5-3-94; am. 3-26-13)

(6) Group living facility for more than 3 unrelated persons. (orig. 5-25-04)

(7) Any gate across access that serves a parcel or parcels, a tract or tracts, or a lot or lots. A Miscellaneous Zoning Permit issued for such purpose shall first be approved by the applicable fire protection district. Access through the gate shall be granted to beneficiaries of any easements and emergency service providers. (orig. 5-10-22)

(8) A noise barrier fence, maximum of 8 feet in height, may be constructed adjacent to right-of-way for an arterial or higher-class street or road. (orig. 7-1-03; am. 7-17-18; reloc. 5-10-22)

b. A Miscellaneous Zoning Permit shall not be issued unless the plans and the use conform to the provisions of this Zoning Resolution. (orig. 5-3-94)

c. The owner, at the time of issuance of a Miscellaneous Zoning Permit, and the person to whom the permit is issued shall be responsible for compliance with all the requirements set forth in this Zoning Resolution for the building, structure and/or activity covered by the permit. (orig. 5-3-94; am. 12-17-02)

3. Short-Term Rental Permit

a. It shall be unlawful for any person, firm or corporation to operate a short-term rental without obtaining an approved Short-Term Rental Permit. In addition, the following criteria must be met before the issuance of a Short-term Rental Permit: (orig. 1-1-12)

(1) The property owner shall notify each adjacent property owner in writing by certified mail of the name and contact information for the 24-hour local primary and secondary contacts. If such local contacts change, the property owner shall notify the adjacent property owners and the Jefferson County Planning and Zoning Division of the new local contacts' information in writing by certified mail within five (5) business days of the change in local contacts. (orig. 1-1-12)

(2) The dwelling shall be equipped with operable smoke alarms, fire extinguishers and carbon monoxide alarms. An operable carbon monoxide alarm shall be installed within fifteen (15) feet of the entrance to each room used for sleeping purposes. The smoke alarms shall be installed pursuant to the current International Building Code as adopted by the Jefferson County Division of Building Safety. (orig. 1-1-12)

(3) The proposed short-term rental shall provide a minimum of one (1) off street parking spaces, plus one (1) additional space per sleeping room. (orig. 1-1-12)

(4) Proof of adequate water and sewer. (orig. 1-1-12)

(5) Legal access in conformance with the access requirements of this Zoning Resolution. (orig. 1-1-12)

(6) Proof of Fire Protection. (orig. 1-1-12)

(a) Outdoor fires using wood or charcoal for fuel are always prohibited. (orig. 1-1-12)

(7) The property owner shall provide a current sales tax license for the short-term rental issued by the Colorado Department of Revenue. (orig. 1-1-12)

b. A permit for a short-term rental shall be obtained within thirty (30) days following review by the Board of Adjustment for approval or renewal of a special exception to allow a short-term rental of a single-family dwelling. The review of the Short-Term Rental Permit application will include but is not limited to: failure to comply with any conditions set by the Board of Adjustment on approval of the special exception for short-term rentals, complaints received by the Sheriff's Office for noise or improper parking, any active zoning violations or other impacts that cause the short-term rental to become

incompatible with the surrounding land uses. (orig. 1-1-12)

c. The owner at the time of issuance of a short-term rental permit and the person to whom the permit is issued shall be responsible for compliance with all the requirements set forth in this Zoning Resolution for the building, structure and/or activity covered by the permit. (orig. 1-1-12)

d. Once the short-term rental permit has been issued, the owner shall provide all rental dates to the Jefferson County Planning & Zoning Division. In turn, Planning & Zoning shall provide this information to the Jefferson County Assessor and the Colorado Department of Revenue. This report shall be filed quarterly. (orig. 1-1-12)

e. The property owner shall post the 24-hour local contact information as well as the Short-Term Renter Good Neighbor Brochure as created by the Planning and Zoning Division at a prominent location within the structure. In addition, the property owner shall provide each renter with a copy of the brochure at the time of occupancy. (orig. 1-1-12)

f. The County may revoke a Short-Term Rental Permit at any time for failure to comply with the provisions of this Zoning Resolution concerning short-term rentals and/or confirmed violation(s) of any federal, state, or local law, ordinance, or regulation. The decision of the County to revoke a Short-Term Rental Permit may be appealed to the Board of Adjustment. No short-term rental of the subject property may occur while an appeal is pending. (orig. 1-1-12)

4. Setback Criteria from Streets/Roads: Setbacks shall be measured from the private access easements, easements associated with public street/road templates set forth in the Jefferson County Transportation Design and Construction Manual or flow line/edge of pavement of public and private streets or roads, except where Planning and Zoning finds that the private access easement functions as a shared driveway, based upon criteria including the following: (orig. 3-15-82; am. 12-17-02; am. 5-20-08; am. 10-13-09; am. 3-3-15; am. 11-24-15; am. 7-17-18)

   a. Estimated current or projected average daily traffic (ADT); (orig. 3-15-82; am.10-13-09)

   b. Design and topography; (orig. 3-15-82)

   c. Providing connection between thoroughfares. (orig. 3-15-82)

   d. Number of properties served by the easement. (orig. 7-17-18)

   In the event the private access easement is determined to be functionally equivalent to a shared driveway, a minimum setback from the access easement of five (5) feet shall apply. (orig. 7-17-18)

5. General Setback Criteria:

   a. All setbacks shall be measured from the foundation or wall; however, eaves, roof overhangs, and fireplaces may protrude 24 inches into the setback. Underground counterforts and window wells may protrude into setbacks. (am. 7-17-18)

   b. The placement of improvements on any such zoned property may be further restricted by plat notes approved by the Board of County Commissioners in conjunction with an approved Plat, Exemption from Platting, or other process subject to the Land Development Regulations. (reloc. 7-17-18)

E. Zone District Boundaries

For purposes of determining zone district boundaries after vacation of a right of way dedicated or deeded to the County, the zoning applicable to the property abutting on either side of the right of way shall, after vacation, be deemed to extend to the centerline of such vacated right of way. (orig. 9-6-77)

F. Street/Road Setbacks

For purposes of measuring front, side and rear setbacks, all measurements shall be measured from the future right of way line when the street or road is designated on the "County Major Thoroughfare Plan". (orig. 7-28-58; am. 9-6-77; am. 12-17-02; am. 10-13-09)

G. Front Yard

1. On a through lot, the front yard requirements of the applicable zone district shall apply to each lot line fronting on a street. (orig. 5-6-46; am. 9-6-77)

2. Regardless of the location of, or the direction that any structure faces and regardless of where the main entryway into the structure is located, the front lot line of a lot shall be as indicated on the subdivision plat

or if not shown on a Subdivision Plat, it shall be determined by the main route of access into the property. (orig. 7-28-58; am. 9-6-77; am. 12-17-02)

3. Every part of the required front yard shall be open and unobstructed from its lowest point to the sky, except for landscaping and fencing not prohibited by the appropriate Section of this Zoning Resolution; and except for entry features with a minimum 14 foot height clearance. (orig. 5-6-46; am. 12-26-62; am. 9-6-77; am. 8-6-80; am. 12-17-02; am 7-17-18)

H. Side Yard

Every part of the required side yard shall be open and unobstructed from its lowest point to the sky, except for landscaping, accessories such as clothes lines, swing sets up to 8 feet in height and fencing not prohibited by the appropriate Section of this Zoning Resolution. (orig. 5-6-46; am. 9-6-77; am. 8-6-80; am. 12-17-02)

I. Rear Yard

Every part of the required rear yard shall be open and unobstructed from its lowest point to the sky, except for landscaping and accessories such as clothes lines, swing sets up to 8 feet in height and fencing not prohibited by the appropriate Section of this Zoning Resolution. (orig. 5-6-46; am. 9-6-77; am. 8-6-80; am. 12-17-02)

J. Fences

1. Fences shall meet the standards set forth in the Zoning Resolution and applicable County Regulations. (orig. 5-10-22)
2. A noise barrier fence, maximum of 8 feet in height, may be constructed adjacent to right-of-way for an arterial or higher-class street or road. (orig. 7-1-03; am. 7-17-18; reloc. 5-10-22)
3. Fences on corner lots must comply with vision clearance triangle requirements. (orig. 7-17-18; reloc. 5-10-22)
4. Fences more than 42 inches in height are allowed, subject to the following development standards:
   a. Side-to-street setback: Fence shall be set back to the edge of the sidewalk, or at least 10 feet from the flowline of adjacent streets if no sidewalk exists. (orig. 7-17-18; reloc. 5-10-22)
   b. Front setback: Fences shall be set back to the edge of the sidewalk, or at least 10 feet from the flowline of adjacent streets if no sidewalk exists, provided the applicable zone district allows fences in the front setback. (orig. 7-17-18; reloc 5-10-22)
   c. Fences shall maintain a 25'x25' sight triangle for all driveways, both on-site and off-site, which is measured from the edge of driveway and the flowline of street/road. (orig. 7-17-18; reloc. 5-10-22)

K. Rubbish

The outdoor storage of rubbish is prohibited unless expressly allowed by the applicable zone district. (orig. 5-20-08)

L. Height Regulation

1. The height limitations established for each zone district shall apply to flagpoles; and radio, television or microwave towers (including antennas), except as otherwise provided within this section. Noncommercial antenna installations for home use of radio or television are excluded. (orig. 6-14-88; am. 6-7-94; am. 12-17-02; am. 4-20-10)
2. The height limitations established for any zone district, except Planned Development, shall not apply to chimneys, stacks, water towers, grain elevators, silos, elevators, monuments, dome spires, belfries, hangars and accessory symbols of government, religious, fraternal and civic organizations when attached to the respective building. (orig. 5-6-46; am. 9-6-77; am. 6 14 88; am. 4-20-10)

M. Dangerous and/or Wild Animals

1. Notwithstanding any other provision of this Zoning Resolution and except as provided in paragraphs L.2. and L.3. below, no person shall own, possess, harbor, maintain or keep any of the following species of animals, other than wildlife in existing natural habitat, on any property within any zone district (other than as specified in the Agricultural-Two (A-2) and Agricultural Thirty-Five (A-35) Zone Districts) in the unincorporated area of Jefferson County. The restrictions within this section apply to the A-2 and A-35 Zone Districts, when the property is at least 10 acres in size, and the keeping of dangerous and wild animals is done in accordance with an approved Special Use. (orig. 8-1-78; am. 3-28-00; am. 12-17-02; am. 3-26-13)

a. Poisonous reptiles, species of nonpoisonous snakes which ordinarily grow to more than 6 feet in length when mature, and lizards belonging to the family Varanidae; (orig. 8-1-78)

b. Crocodilians; (orig. 8-1-78)

c. All species of non-human mammals except the following: (orig. 8-1-78)

(1) Domestic cat (Felis catus); (orig. 8-1-78)

(2) Chinchilla (Chinchilla laniger); (orig. 8-1-78)

(3) Domestic dog (Canis familiaris); (orig. 8-1-78)

(4) Domestic ferret (Mustela putoris furo); (orig. 8-1-78)

(5) Mongolian gerbil (Meriones unguicularus); (orig. 8-1-78)

(6) Guinea pig (Cavia porceilus); (orig. 8-1-78)

(7) Hamster (Mesocricetus auratus); (orig. 8-1-78)

(8) Domestic laboratory mouse (Mus domesticus); (orig. 8-1-78)

(9) Domestic rabbit (Oryctolagus cuniculus); (orig. 8-1-78)

(10) Domestic laboratory rat (Rattus rattus albino strain); (orig. 8-1-78)

(11) Squirrel monkey (Saimiri seinrous); (orig. 8-1-78)

(12) Owl monkey (Aotus trivirgatus); (orig. 8-1-78)

(13) Woolly monkey (Lagothrix lagothrica); (orig. 8-1-78)

(14) Pygmy Goat (Goatus Minimus); (orig. 7-17-18)

(15) Miniature Pig (Göttinger minipig); (orig. 7-17-18)

(14) Domestic livestock including, but not limited to the following: horses, cattle, sheep, goats, swine, mules, donkeys, burros, llamas, alpacas, emu, and ostrich. (orig. 8-1-78; am. 12-17-02)

2. For any property zoned Agricultural-Two (A-2) and Agricultural Thirty-Five (A-35), the owner thereof shall receive Special Use approval in order to be permitted to own, possess, harbor, maintain or keep any one or more animals of the species listed in paragraph L.1. above, where the ownership, possession, harboring, maintenance or keeping of such animal(s) is necessary to a use which is otherwise in compliance with the applicable zone district regulations and is specifically for one of the following purposes: (orig. 8-1-78; am. 12-17-02; am. 3-26-13)

a. To be used for scientific research or for production of scientific or commercial supplies or as breeding stock in connection with a business or other commercial operation or research facility established as a use upon the premises; or (orig. 8-1-78)

b. To be used for purposes of public commercial exhibition, whether as a profit or nonprofit operation, such as a permanent zoological gardens or a temporary or traveling menagerie, circus, rodeo or livestock show. (orig. 8-1-78)

3. For any property zoned Agricultural-Two (A-2) and Agricultural Thirty-Five (A-35), the owner thereof shall receive Special Use approval in order to be permitted to own, possess, harbor, maintain or keep any one or more animals of the species prohibited under paragraph L.1. above, where the applicant demonstrates a special interest and competency in caring for such an animal or animals, and where the applicant demonstrates to the satisfaction of the Planning Commission and the Board of County Commissioners that the health, safety and welfare of humans and domestic animals in the area and of the general public is adequately safeguarded. (orig. 8-1-78; am. 12-17-02; am. 3-26-13)

4. The application for a Special Use under paragraphs: L.2. and L.3. above, shall be made to the Planning Commission. If approved by the Planning Commission, the application shall proceed to the Board of County Commissioners, which must also approve the application for the Special Use to be permitted. (orig. 8-1-78; am. 12-17-02)

5. One criterion relevant to the determination of whether to approve the Special Use shall be the agreement by the applicant that proposed facilities for the keeping of such animal(s) will be constructed and maintained in accordance with the requirements of the Colorado Division of Wildlife. (orig. 8-1-78)

As a condition of the continued validity of any Special Use granted under paragraphs L.2 and L.3 above,

the applicant must at all times ensure that adequate safeguards for the health and security of both the animal(s) and humans and domestic animals in its (their) vicinity are provided, and must at all times be in compliance with all rules and regulations of the Colorado Division of Wildlife, including permit requirements; and, in addition, the applicant must at all times keep the animal(s) securely locked in the facilities approved by the Colorado Division of Wildlife which provide such adequate safeguards. (orig. 8-1-78)

N. Sexually Oriented Businesses

1. No person may operate or cause to be operated a sexually oriented business within 1,000 feet of any of the following, whether the use or zone district listed below is unincorporated Jefferson County, an adjacent county, or within an incorporated municipality. (orig. 7-8-97)
   a. A Religious Assembly. (orig. 7-8-97; am. 3-26-13)
   b. A school meeting all requirements of the compulsory education laws of the state. (orig. 7-8-97)
   c. The boundary of any zone district in which one of the primary uses is residential. (orig. 7-8-97)
   d. A dwelling unit (single or multiple). (orig. 7-8-97)
   e. A public park. (orig. 7-8-97)
   f. A licensed childcare center. (orig. 7-8-97)
   g. An establishment holding a liquor license. (orig. 7-8-97)
2. No person may operate or cause to be operated a sexually oriented business within 1,000 feet of another sexually oriented business. (orig. 7-8-97)
3. No person may cause or permit the operation, establishment or maintenance of more than one sexually oriented business within the same building or structure or portion thereof, such as in a shopping center. A sexually oriented business may include one or more types of sexually oriented business provided it has one address and is operated as a single business entity that has one sales tax license number. (orig. 7-8-97)
4. For the purposes of this section, the distance between any two sexually oriented businesses shall be measured in a straight line, without regard to intervening structures, streets, or political boundaries, from the closest exterior structural wall of each business. (orig. 7-8-97)
5. For purposes of this section, the distance between any sexually oriented business and any Religious Assembly, school, child care center, public park, establishment holding a liquor license, dwelling unit (single or multiple) or residential zone district shall be measured in a straight line, without regard to intervening structures or objects or political boundaries, from the closest exterior wall of the structure in which the sexually oriented business is located to the nearest property line of the premises of a Religious Assembly, school, child care center, an establishment holding a liquor license, or dwelling unit (single or multiple), or the nearest boundary of an affected public park or residential zone district, whichever is closest. (orig. 7-8-97; am. 3-26-13)
6. If two or more sexually oriented businesses are within 1,000 feet of one another and are otherwise in a permissible location, the sexually oriented business which was first established and continually operating at its particular location will be deemed to be in compliance with this Zoning Resolution and the later established business(es) will be deemed to be in violation of this Zoning Resolution. (orig. 7-8-97; am. 12-17-02)
7. A sexually oriented business lawfully operating is not rendered in violation of this Zoning Resolution by the subsequent location of a Religious Assembly, school, childcare center, dwelling unit (single or multiple), public park, establishment holding a liquor license, or residential zone district within 1,000 feet of the sexually oriented business. (orig. 7-8-97; 12-17-02; am. 3-26-13)
8. All sexually oriented business shall blacken their windows or arrange the business so that the interior of the business and its stock in trade cannot be viewed from the exterior of the business. (orig. 7-8-97)

O. Bars and Taverns

1. No establishment holding a liquor license may operate within 1000 feet of a sexually oriented business. (orig. 7-8-97)
2. For purposes of this section, the distance between any sexually oriented business and any establishment holding a liquor license shall be measured in a straight line, without regard to intervening structures or

objects or political boundaries, from the closest exterior wall of the structure in which the sexually oriented business is located to the nearest property line of the premises of an establishment holding a liquor license. (orig. 7-8-97)

P. Rural Cluster

Permitted uses, lot and building standards, and general requirements for specific zone districts may differ from the standards specified in this Zoning Resolution for applications undergoing a rural cluster land division. When the regulations of the rural cluster process, as contained in the Land Development Regulation, conflict with any provision of this Zoning Resolution, the provision of the rural cluster process shall control. (orig. 10-13-98; am. 12-17-02)

Q. Marijuana

1. Private Marijuana Clubs are prohibited in all zone districts as principal or accessory uses, regardless of whether any such use is operated for profit or not for profit. (orig. 4-14-14)
2. Cultivation or processing of marijuana is only allowed in an enclosed, locked structure located on a residential property which constitutes the primary residence of the cultivator/processor, and only for personal use of the cultivator/processor. No more than 6 plants may be grown on each residential property for each registered medical marijuana patient or adult age 21 or older, and in no case may more than 12 plants be grown on a residential property. Nothing in this section shall be construed to prohibit the cultivation or processing of medical marijuana by a primary caregiver for his or her patients, provided that any such primary caregiver does not exceed the limitations on number of plants set forth in this section and is growing the plants in accordance with applicable provisions of Article XVIII, Section 14 of the Colorado Constitution; C.R.S. § 25-1.5-106, as amended; and any applicable rules promulgated under state law. (orig. 4-14-14)

ZONING RESOLUTION SECTION 16 – CLEAN COPY

Section 16: Land Disturbance

(orig. 8-25-86; am. 9-24-91; am. 8-8-95; am. 10-12-04;
am. 4-20-10; am.11-20-12; am 6-1-19)

A. Purpose

The purpose of this section is to:

1. Protect the water quality of the County's drainageways and surface waters; (orig. 10-12-04; am. 12-6-22)
2. Protect life, property and the environment from loss, injury and damage by stormwater runoff, erosion, sediment transport, ponding, flooding, landslides, accelerated soil creep, settlement and subsidence, excessive dust, and other potential hazards caused by grading, construction activities, and denuded soils; (orig. 10-12-04)
3. Allow a temporary land use for land disturbance activities; and (orig. 8-25-86; am. 9-24-91; am. 3-23-99; am. 10-12-04)
4. Establish performance standards to:
   a. Define grading, drainage, erosion and sediment control, and waste disposal requirements; (orig. 10-12-04)
   b. Ensure mitigation of adverse impacts; and (orig. 10-12-04)
   c. Ensure the reclamation of disturbed land. (orig. 10-12-04)

B. General Provisions

1. Performance Standards:

   All Land Disturbance Activities must conform to the performance standards as detailed in this section. These standards apply whether or not a Land Disturbance Permit is required. (orig. 10-12-04; am. 12-6-22)

2. Activities Requiring a Land Disturbance Permit (Grading Permit or Notice of Intent):

   It shall be unlawful for any person, firm or corporation to do or authorize any land disturbance in the unincorporated area of Jefferson County without first obtaining a Land Disturbance Permit from the County to authorize temporary land disturbance activities unless specifically exempted by this section. The applicant, the landowner, and the contractor are responsible if a land disturbance activity is not in accordance with the performance standards, or if a land disturbance activity is undertaken beyond the scope of the Land Disturbance Permit without County approval. Land disturbance activities must be completed in compliance with the approved plans. (orig. 8-25-86; am. 9-24-91: 8-8-95; am. 3-23-99; am. 12-17-02; am. 10-12-04; am. 12-6-22)

   a. Land Disturbance Activities will require a Grading Permit if one the following apply: (orig. 10-12-04; am. 12-6-22)
      (1) The disturbed area is equal to or greater than 0.5 acres. (orig. 6-1-19; am. 12-6-22)
      (2) Land disturbance activities with or in advance of a building permit with less than 0.5 acres of land disturbance, where the applicant is requesting relief of a regulatory requirement, including all performance standards related to grading, drainage and circulation. (orig. 6-1-19; am. 12-6-22; reloc. XX-XX-XX)
      (3) 5,000 or more cubic yards of earthen material is stored on a property and the material is not actively being used on said property. An active use would be construction associated with an active building permit for a primary structure. (orig. 12-6-22)
   b. Land disturbance activities that require a Notice of Intent to be submitted with, or in advance of, a Building Permit application include the following: (orig. 10-12-04; am. 6-1-19; am. 12-6-22)
      (1) Land disturbance associated with new start building permits for primary structures. (orig. 6-1-19)
      (2) Land disturbance associated with access to detached living space where either the access does not exist or has not previously been approved as access to living space. (orig. XX-XX-XX)

This Notice of Intent process shall only apply to land disturbance activities that meet the regulatory requirements, including all performance standards related to grading, drainage and circulation. (orig. 6-1-19; am. 12-6-22; am. XX-XX-XX)

3. Activities exempt from the Requirement for a Grading Permit

Land disturbance activities that are exempt from Grading Permit requirements shall comply with the specific requirements, if any, listed in the applicable exemption provision below. In addition, land disturbance associated with activities listed within this exemption section must still be in compliance with the performance standards set forth in this section, unless specifically stated otherwise. The applicant, landowner and the contractor are responsible if land disturbance activity is not in accordance with these performance standards. The following land disturbance activities are permissible without obtaining a Grading Permit: (orig. 8-25-86; am. 9-24-91; am. 8-8-95; am. 3-23-99; am. 10-12-04; am. 4-20-10; am. 6-1-19; am. 12-6-22)

a. Projects which involve less than 0.5 acres of disturbed area. Individual lots in subdivision developments under the same ownership, involving less than 0.5 acres of disturbed area, shall not be considered separate projects if they are contiguous or within 0.25 mile of each other. Any series of related projects or connected projects on one site, which together exceed the 0.5 acre limitation shall be considered a single project and shall be required to obtain a Grading Permit. (orig. 9-24-91; am. 12-17-02; am. 10-12-04; am. 7-12-05; am. 11-24-15; am. 6-1-19)

b. Land disturbance work being done pursuant to and in conformance with an approved grading plan in conjunction with an approved recorded Plat, Site Development Plan, Minor Adjustment or Exemption from Platting. (orig. 8-25-86; am. 9-24-91; am. 8-8-95; am. 4-27-04; am. 10-12-04)

c. Tillage of agricultural land is exempt from all permit requirements. Agricultural uses of land zoned agricultural, other than tillage, which disturb greater than 0.5 acres is exempt from the filing requirements, provided a conservation plan for the proposed grading activities using the United States Department of Agriculture Soil Conservation Service standards is approved by the Jefferson Conservation District. A copy of the conservation plan shall be submitted to Planning and Zoning prior to the commencement of grading activities. The County may enforce the conditions of the conservation plan under the enforcement provisions of this section. (orig. 9-24-91; am. 8-8-95; am. 12-17-02; am. 4-27-04; am. 11-24-15; am. 6-1-19; am. 12-6-22)

d. Trenching incidental to the construction, maintenance and installation of approved underground pipelines, electrical or communication facilities, and drilling or excavation for approved wells if the total area of land disturbance is less than one acre. Construction activities associated with the installation of the onsite wastewater treatment system (OWTS) shall not be exempt. Construction of access required to complete the trenching or for future maintenance shall not be exempt. (orig. 8-25-86; am. 9-24-91; am. 8-8-95; am. 10-12-04; am. 4-20-10; am.11-20-12; am. 11-24-15; am. 12-6-22)

e. Land disturbance for utility installation or maintenance within a County owned or County maintained Right-of-Way if the total area of land disturbance is less than one acre. These activities require a County Right-of-Way and Construction Permit. (orig. 8-8-95; am. 10-12-04; am.11-20-12)

f. Land disturbance or excavations in accordance with plans incorporated in a mining permit, reclamation plan or sanitary landfill approved by the County. (orig. 8-25-86; am. 9-24-91; am. 12-17-02; am. 10-12-04)

g. County capital improvement or County maintenance projects within Right-of-Way or County property if the total area of land disturbance is less than one acre. (orig. 12-17-02; am. 10-12-04; am.11-20-12; am. 12-6-22)

h. Maintenance and cleaning of existing ditches, lakes, ponds, storm sewer system, and water storage reservoirs with a total area of land disturbance is less than one acre. (orig. 8-25-86; am. 10-12-04; am. 6-1-19)

i. Land disturbance for culvert installation or maintenance within a County owned, public ROW or County maintained Right-of-Way if the total area of land disturbance is less than one acre and the culvert is intended to convey stormwater only. (orig. 6-1-19)

j. Maintenance and resurfacing of existing streets/roads, runways, sidewalks/trail systems, parking lots/loading areas, and railroad beds. (orig. 9-24-91; am. 10-12-04)

k. Performance of emergency work necessary to prevent or mitigate an immediate threat to life or property when an urgent necessity arises. The person performing such emergency work shall notify Planning and Zoning promptly of the problem and work required. If the emergency work would not otherwise be exempt from a Grading Permit, a Grading Permit shall be obtained as soon as possible. (orig. 8-25-86; am. 9-24-91, 8-8-95; am. 4-27-04; am. 10-12-04; am. 5-20-08)

l. Enlargements to parking areas less than 0.5 acre larger than the original area of existing parking facilities for commercial, industrial and institutional uses. Stormwater detention and water quality must be provided for in accordance with the Storm Drainage Design and Technical Criteria Manual. (orig. 4-27-04; am. 10-12-04; am. 11-24-15; am. 6-1-19)

m. Land disturbance for natural surface trails that are less than one acre are exempt. Land disturbance over one acre associated with the construction of natural surface trails shall follow the procedure outlined below prior to commencement of any trail construction. The land disturbance associated with the construction of natural surface trails shall conform with the performance standards of this section and the current Jefferson County Natural Surface Trail Guide. (orig. 4-20-10; am.11-20-12; am. 11-24-15; am. 7-17-18)

(1) Plans are submitted showing the location and overall scope of the trail construction project, including a description of the proposed construction phasing. (orig. 4-20-10; am. 7-17-18)

(2) A detailed construction schedule is provided for each phase of the construction project. (orig. 4-20-10)

(3) The applicant proposes a construction guide that includes typical construction procedures that will be used during the construction of trails, including erosion and sediment control measures. (orig. 4-20-10)

(4) Planning and Zoning has reviewed the construction guide and has determined that the construction procedures will be sufficient to assure compliance with the grading performance standards of this section, and state or county erosion and sediment control standards. (orig. 4-20-10)

(5) The applicant shall stake the proposed trail alignment and shall coordinate a site visit with County Staff to review the alignment. If Staff identifies areas where trail alignment should be adjusted to assure conformance with the performance standards and the construction guide, then a new plan showing the new alignment shall be submitted. (orig. 4-20-10)

(6) The applicant agrees to implement the construction procedures identified within the guide and agrees that the county has the authority to inspect and require field alterations if the typical construction procedures identified in the guide are not being properly implemented. The applicant also agrees that failure to implement the construction standards of the guide or the field alterations directed by Planning and Zoning may result in the issuance of a zoning violation in accordance with this Resolution; and may result in the exemption from the grading permit requirements being revoked for future phases of the trail construction project. (orig. 4-20-10)

(7) The applicant submits the standard Grading Permit fee to cover the cost of the review and approval of the construction guide, and the inspection of each phase of the construction process. (orig. 4-20-10)

The procedures outlined in this section shall not apply to trail construction in special flood hazard areas that have been identified as a part of the Jefferson County Floodplain Overlay District. The appropriate floodplain development permit and grading permit will be required for construction activities occurring within special flood hazard areas. (orig. 4-20-10; am. 6-1-19)

n. Any work within State or Federal lands including Rights-of-Way and/or permanent easements held by said agencies. This exemption does not relieve these entities from completing a floodplain development permit in accordance with the Floodplain Overlay District Section of this regulation. (orig. 7-17-18)

o. Onsite disturbance through the Land Disturbance Permit may not be required for properties that are covered by a separate Municipal Separate Storm Sewer System (MS-4) permit through the State of Colorado, as determined by Planning & Zoning. (reloc. and am. 5-21-19)

4. Exemptions, Waivers, Variances and/or Exclusions

Any exclusions, exemptions, waivers, and variances included in the regulatory mechanism must comply with the terms and conditions of the MS4 Permit (COR090000). (orig. 6-1-19)

5. Denial of other Permits

   Building Permits or Certificate of Occupancy shall not be issued while an unresolved grading, drainage or floodplain violation is ongoing on the subject property or within a common plan of development. (orig. 8-25-86; am. 9-24-91, am. 8-8-95; am. 12-17-02; am. 7-17-18; am. 6-1-19; am. 12-6-22)

6. Permission of other Agencies or Owners

   The issuance of a Grading Permit or the submission of a Notice of Intent shall not relieve the applicant of the responsibility for securing other permits or approvals required by any other division or agency of Jefferson County or other public agency or for obtaining any easements or authorization to work within an existing easement or for removing or transporting earth materials on property not owned by the applicant. (orig. 8-25-86; am. 9-24-91; am. 8-8-95; am. 12-17-02; am. 4-27-04; am. 10-12-04; am. 12-6-22)

7. Construction and Permits

   For construction within County Right-of-Way, the Grading Permit or Notice of Intent must be accompanied by an Access Permit and/or a Right-of-Way Use and Construction Permit in accordance with plans approved by the County. For construction outside of County Right-of-Way, the Grading Permit must be accompanied by a Construction Permit in accordance with the plans approved by the County. The applicant shall obtain applicable permits from the County prior to commencing field work. All other applicable requirements shall be followed including the Transportation Design and Construction Manual. (orig. 8-8-95; am. 12-17-02; am. 10-12-04; am. 11-24-15; am. 7-17-18; am. 12-6-22)

8. Liability

   Neither the issuance of a Grading Permit nor the submission of a Notice of Intent under the provisions of this section nor compliance with the provisions hereof or with any conditions imposed in this section shall relieve the applicant from responsibility for damage to any person or property or impose any liability upon the County for damage to any person or property. (orig. 8-25-86; am. 12-17-02; am. 10-12-04)

9. Restricted Activities

   a. No blasting, processing, crushing, or off-site hauling or other similar treatment of a commercial mineral deposit may occur in the permit area. (orig. 9-24-91; am. 10-12-04)

   b. Any activity to construct any street/road to be dedicated to the County shall be undertaken pursuant to the Land Development Regulation and the Transportation Design and Construction Manual and in accordance with plans approved by the County. (orig. 9-24-91; am. 8-8-95; am. 3-23-99; am. 12-17-02; am. 10-12-04; am. 11-24-15)

   c. No Grading Permit shall be issued for any land disturbance activity which exceeds the minimal amount of grading necessary for the uses legally allowed at the time of permit application. Land disturbance activities for uses that require rezoning are unlawful. (orig. 8-8-95; am. 3-23-99; am. 10-12-04)

   d. When there is a grading plan approved in conjunction with a Plat, Site Development Plan, Minor Adjustment or an Exemption from Platting, it shall be unlawful to grade in a manner that is not consistent with the approved grading plan. (orig. 8-8-95; am. 3-23-99; am. 10-12-04; am. 7-17-18)

   e. Any construction or development activity in a drainage easement or tract must either be in compliance with the original approved drainage report or comply with the Storm Drainage Design and Technical Criteria. (orig. 10-12-04)

10. Grading Concurrent with Platting

    a. When a property is in a platting process, grading activities may commence prior to Plat approval by the Board of County Commissioners provided all of the following conditions are satisfied: (orig. 3-23-99; am. 10-12-04)

       (1) The zoning is final and recorded. (orig. 3-23-99)

       (2) The subdivision proposal has received approval by the Planning Commission or a recommendation of approval by the Planning Commission. (orig. 3-23-99; am. 10-12-04, am. 12-6-22)

(3) The grading and sediment and erosion control plans have received staff approval, either through the Final or Preliminary and Final Plat process. The grading plans shall not include permanent facilities such as curb, gutter, sidewalk, asphalt, etc. The installation of drainage facilities is allowed as approved by Planning and Zoning. (orig. 3-23-99; am. 10-12-04; am. 11-24-15)

(4) The Final Plat application has been received and accepted as complete by staff or the Planning Commission has recommended approval of the Preliminary and Final Plat. (orig. 3-23-99; am. 10-12-04; am. 11-24-15)

(5) Grading within a Floodplain Overlay District may be permitted if a Floodplain Development Permit has been issued. (orig. 3-23-99; am. 12-17-02; am. 10-12-04; am. 11-24-15; am. 7-17-18)

(6) No waivers or alternative standards/requirements or variances related to grading requirements are being requested or are necessary in conjunction with the Final or Preliminary and Final Plat application. (orig. 3-23-99; am. 10-12-04; am. 11-24-15)

(7) The applicant has submitted a letter to the County indicating a request to commence land disturbance activities prior to Final or Preliminary and Final Plat approval and acknowledging that grading prior to Platting is done at their own risk, that grading changes may be required upon Final or Preliminary and Final Plat approval, and that the County shall not be held responsible for changes emanating from or costs associated with any changes that may be required as a result of Final or Preliminary and Final Plat approval. (orig. 3-23-99; am. 12-17-02; am. 10-12-04; am. 11-24-15)

(8) A Performance Guarantee has been accepted by the County in accordance with the Land Development Regulation. (orig. 10-12-04)

b. When grading activities are authorized prior to Plat approval by the Board of County Commissioners, the grading shall comply with the Land Development Regulation and with any previously approved grading plans. (orig. 3-23-99; am. 12-17-02; am. 10-12-04; am. 11-24-15)

c. Any land disturbance activity permitted pursuant to this section may be subject to additional requirements or alterations depending on approval conditions imposed by the Board of County Commissioners during the Plat review. (orig. 3-23-99; am. 10-12-04)

11. Grading Concurrent with the Processing of a Site Development Plan or Minor Adjustment

a. When a property is in a Site Development Plan or Minor Adjustment process, grading activities may commence prior to approval by Planning and Zoning provided all of the following conditions are satisfied: (orig. 11-24-15; am. 7-17-18)

(1) The zoning is final and recorded. (orig. 11-24-15)

(2) The grading and sediment and erosion control plans have received staff approval. The grading plans shall not include permanent facilities such as curb, gutter, sidewalk, asphalt, etc. The installation of drainage facilities is allowed as approved by Planning and Zoning. (orig. 11-24-15)

(3) Grading within a floodplain overlay district may be permitted if a Floodplain Permit has been issued. (orig. 11-24-15; am. 7-17-18)

(4) No alternate standards/requirements or variances related to grading requirements are being requested or are necessary in conjunction with the Minor Adjustment or Site Development Plan application. (orig. 11-24-15)

(5) The applicant has submitted a letter to the County indicating a request to commence land disturbance activities prior to Minor Adjustment or Site Development Plan approval and acknowledging that grading prior to approval is done at their own risk, that grading changes may be required upon Minor Adjustment or Site Development Plan approval, and that the County shall not be held responsible for changes emanating from or costs associated with any changes that may be required as a result of Minor Adjustment or Site Development Plan approval. (orig. 11-24-15)

(6) A Performance Guarantee has been accepted by the County in accordance with the Land Development Regulation. (orig. 11-24-15)

b. When grading activities are authorized prior to Minor Adjustment or Site Development Plan approval

by Planning and Zoning, the grading shall comply with the Land Development Regulation and with any previously approved grading plans. (orig. 11-24-15; am. 7-17-18)

c. Any land disturbance activity permitted pursuant to this section may be subject to additional requirements or alterations depending on approval conditions imposed by Planning and Zoning during the Minor Adjustment or Site Development Plan review. (orig. 11-24-15; am. 7-17-18)

C. Submittal Requirements

The following submittal documents are required for Land Disturbance Permit Applications. (orig. 8-25-86; am. 7-17-18; am. 6-1-19)

1. An application form signed by the fee simple owner of the property or by the lessee, licensee or easement holder if the activity is to be undertaken pursuant to that interest. Grading Permit, Notice of Intent, and Natural Surface Trail application forms are available from Planning and Zoning. (orig. 10-12-04; am. 5-20-08; am. 6-1-19)
2. A cover letter describing the proposed activities. Not Required for Notice of Intent Applications. (orig. 10-12-04; am. 5-20-08; am. 6-1-19)
3. A nonrefundable application fee in an amount established by the Board of County Commissioners. (orig. 8-25-86; am. 9-24-91; am. 5-3-94)
4. A copy of the recorded deed for the parcel, tract or lot. (orig. 12-6-22)
5. Proof of Access in accordance with the Access Standards in the General Provisions and Regulations Section of this Zoning Resolution. (orig. 6-1-19)
6. A grading, erosion and sediment control plan in accordance with the Plans and Specifications of this Section. (orig. 8-25-86; am. 6-1-19)
7. A geologic and/or soils investigation report in accordance with the Plans and Specifications of this Section is required if there are any geological hazards including highly erodible soils or commercial mineral deposits within or immediately adjacent to the grading site or when the final cut or fill slopes are proposed to be steeper than 2H:1V or if infiltration is a component of the drainage system. (orig. 8-25-86; am. 9-24-91, 8-8-95; am. 12-17-02; am. 10-12-04; am. 6-1-19; am. 12-6-22)
8. A drainage report or drainage letter in conformance with the requirements of the Storm Drainage Design and Technical Criteria. (orig. 10-12-04; am. 11-24-15; am. 6-1-19; am. 12-17-19)
9. Construction plans, details and supporting calculations for retaining walls, if applicable, in accordance with the Performance Standards of this Section. For Notice of Intent Applications, the applicant will need to apply for a separate miscellaneous permit for retaining walls greater than 36 inches high. (orig. 10-12-04; am. 6-1-19)
10. Drainage Easements may be required to be dedicated to the County for all permanent control measures. The applicant shall provide a legal description and exhibit (signed and stamped by a Professional Land Surveyor) when applicable. Not Required for Notice of Intent Applications. (orig. 12-17-19)
11. A cost and/or quantity estimate (Exhibit A) in accordance with the Improvement Security requirements of this Section, for all the work associated with the project. Reference the example Exhibit A on the Planning and Zoning website. Not Required for Notice of Intent Applications. (orig. 10-12-04; am. 7-12-05; am. 7-17-18; am. 6-1-19; am.12-17-19; am. 12-6-22)

    Note: An improvements security may be required in accordance with the Security requirements of this Section. The typical improvement security will be a letter of credit or cash escrow. If required the improvement security will need to be submitted prior to approval of the Land Disturbance application. (orig. 10-12-04; am. 7-17-18; am. 6-1-19; 12-17-19)
12. A completed N-1 Form stating that the proposed construction and grading are in conformance with the Land Disturbance requirements of this Section and, if applicable, the approved overall grading plan for the subdivision. Only Required for Notice of Intent Applications. (orig. 6-1-19)

    Note: A completed N-2 Form is required prior to issuance of a Certificate of Occupancy. (orig. 6-1-19)

D. Procedures

1. Notice of Intent Procedures: A Notice of Intent (NOI) shall be submitted with, or in advance of, a building permit application for a primary structure that depicts the phased grading, erosion and sediment control measures for that lot/parcel. The NOI shall certify that the Plans are in conformance with the Jefferson

County Zoning Resolution (ZR), the Land Development Regulation (LDR), the Storm Drainage Design and Technical Criteria (SDDTC), and The Transportation Design and Construction Manual (TDCM). Any requests for relief of these standards shall require the submittal of a Grading Permit. If applicable, the NOI shall state that the project will be in conformance with the approved construction documents with that subdivision. A completed Form Letter N-1 stating that the proposed construction and grading are in conformance with the approved overall grading plan and Land Disturbance Performance Standards shall be submitted to Planning & Zoning prior to issuance of the Building Permit. Form Letter N-1 shall be completed by a Colorado registered professional engineer. (orig. 6-1-19; am. 12-6-22)

Process Steps	Processing Time Frames	
Process from Plan Submittal to Acceptance of NOI		
Plan Submittal Intake	7 calendar days (Staff confirms the land disturbance permit qualifies as an NOI and required submittal items have been received)	Example timeframe: 19 Days to acceptance of NOI if processing time frames are met. May take longer if issues arise.
Applicant Action is Required	Varies, 5 calendar days used for example timeframe	
Plan Resubmittal and NOI Acceptance	7 calendar days (Staff confirms required submittal items have been received)	
Final Close Out		
Permit Monitoring until submittal of N-2	2 years maximum	

Plan Submittal Intake

a. Sufficiency Review:

The applicant shall electronically submit all the applicable documents identified in the Submittal Requirements of this Section as a complete package, and not in a fragmentary manner for review by the Case Manager. (orig. 12-6-22)

The Case Manager shall have 7 calendar days to review the submittal and either accept the application or respond to the applicant explaining any deficiencies in the submittal documents (including the appropriate application fees). A submittal that is not complete in terms of the type of documents required will not be accepted. (orig. 12-6-22)

Resubmittal Sufficiency Review (if required): The Case Manager shall have 7 calendar days to review the resubmittal and either accept the application or respond to the applicant explaining any deficiencies in the submittal documents. (orig. 12-6-22)

Plan Resubmittal and NOI Acceptance:

b. The final documents shall be comprised of the Submittal Requirements of this Section. (orig. 12-6-22)

The applicant shall have a maximum of 180 calendar days to respond to the comments from the case manager, or the application will be considered withdrawn. The applicant will then have to file a new application with the required fees and documents. The Director of Planning and Zoning may extend this 180-calendar day maximum response deadline for additional 180 calendar day periods if, in his/her opinion, the delay in response is for good cause. (orig. 12-6-22)

c. The Case Manager shall have 7 calendar days to review the resubmitted documents and shall accept the application if it is complete in form and has all the required information described in the Notice of Intent N-1 Form that provides certification from a Colorado registered professional engineer stating that the submitted plans are in conformance with the Jefferson County Zoning Resolution (ZR), the Land Development Regulation (LDR), the Storm Drainage Design and Technical Criteria (SDDTC), the Transportation Design and Construction Manual (TDCM), and the notes, restrictions and supporting documents of any associated approved Preliminary and Final Plat. The owner, contractor or engineer shall also certify that the specified control measures will be installed prior to land disturbance and that control measures will be adequately maintained throughout the process and shall sign the N-1 Form. (orig. 12-6-22)

Permit Monitoring:

d. Once the work associated with the accepted Notice of Intent is complete, the applicant shall submit a completed N-2 Form which provides certification from a Colorado registered professional engineer stating that all grading work was completed in conformance with the final accepted Grading, Erosion and Sediment Control (GESC) Plan, Drainage Report and N-1 submitted with the project application. If amendments to the accepted plans were made resulting in grading activities that were not completed in conformance with the final accepted plans, then the N-2 Form shall be submitted in conformance with the Amendments procedure of this Section. (orig. 12-6-22)

Permit Limitations:

e. The permit shall be limited to work shown on the approved plans. Such plans shall contain guidelines, conditions, and/or restrictions as are necessary to comply with the performance standards. At any time during the plan review or in the event unforeseen conditions arise during completion of the project, the County may require revision of the plans as necessary to ensure compliance with the performance standards. (orig. 12-6-22)

Amendments:

f. Modifications to the final accepted plans requires submittal of the revised plans and the completed N-2 Form which provides certification from a Colorado registered professional engineer stating that deviations from the accepted plans have occurred and that the revised plans and work has been completed in conformance with the Jefferson County Zoning Resolution (ZR), the Land Development Regulation (LDR), the Storm Drainage Design and Technical Criteria (SDDTC), the Transportation Design and Construction Manual (TDCM), and the notes, restrictions and supporting documents of any associated approved Preliminary and Final Plat. If the appropriate certification cannot be provided and the modifications to the plans do not conform to the Jefferson County Standards and Regulations for land disturbance permits described in this section, revised plans shall be submitted and reviewed by Planning & Zoning through an Administrative Review process where requests for relief from standards will be evaluated. (orig. 12-6-22)

Validity:

g. The acceptance of plans and specifications by the County shall not be construed as an approval of any violation of the provisions of this section or of any other applicable laws, rules or regulations and shall not prevent the County from thereafter requiring the correction of errors in said plans and specifications or from preventing work being carried on thereunder in violation of this section or any other applicable law, rule or regulation. The issuance of a Land Disturbance Permit prior to any Plat approval shall in no way bind the Planning Commission or the Board of County Commissioners in the approval or denial of a Plat application, and the applicant's grading activities are at the applicant's risk. (orig. 12-6-22)

Time Limits:

h. The work associated with the permit shall be completed within 2 years of the date of acceptance unless an extension has been granted by Planning and Zoning. A request for an extension shall be submitted in writing no later than 10 calendar days prior to the expiration of the permit. Planning and Zoning may grant an extension to the permit up to 1 year. Additional extensions may be granted by Planning and Zoning to allow the establishment of permanent erosion and sediment control measures. (orig. 12-6-22)

2. Grading Permit Procedures: If the applicant complies with all given time frames, submits a complete Grading Permit application and complies with all requirements of this regulation, the estimated time to reach the Determination Phase of the process is 66 calendar days from the date of the 1st referral, depending on the amount of disturbance for the proposed grading activity. (orig. 5-20-08; am. 7-17-18; am. 6-1-19; am. 12-6-22)

Process Steps	Processing Time Frames	
Steps prior to 1st Referral		
Sufficiency Review and Referral Distribution or Deficiency Response	7 calendar days	
Resubmittal Sufficiency Review (if necessary)	7 calendar days	
Process from 1st Referral to Determination		
1st Referral and Staff Response	21 calendar days (14	Example timeframe: 66

	day referral, 7 days for Staff response)	Days to determination if processing time frames are met. May take longer if issues arise.
Applicant's Response to 1st Referral	Varies, 14 calendar days used for example timeframe	
Sufficiency Review and Referral Distribution	7 calendar days	
2nd Referral and Staff Response	14 calendar days (7 day referral, 7 days for Staff response)	
Submittal of Final Documents by applicant	Varies - 10 calendar days used for example timeframe	
Determination		
Determination	7 days	

If an applicant is going to request relief from a standard in the Regulations, then a request for relief of the standard may be submitted for consideration. In order to avoid processing delays, it is recommended that a request for relief from a standard be submitted early in the development process. Requests for relief of a standard are subject to different specific processing timeframes, which may add to the length to the processing of the development application. (orig. 5-20-08; am. 7-17-18; am. 6-1-19)

Notification is required at the time of the 1st Referral in accordance with the notification provisions of this section. (orig. 6-1-19)

Proof of Access: The Director of Planning and Zoning may allow the 1st Referral to be sent without meeting the access criteria proof of access requirements, if in his/her opinion the circumstances related to proving access should be finalized during the processing of the application. (orig. 4-20-10; am. 12-21-10; am. 6-1-19)

Steps Prior to 1st Referral

a. Sufficiency Review and Referral Distribution (1st Referral):

The applicant shall electronically submit all the applicable documents identified in the Submittal Requirements of this Section as a complete package, and not in a fragmentary manner for review by the Case Manager.

The Case Manager shall have 7 calendar days to review the submittal and either send the application out on referral or respond to the applicant explaining any deficiencies in the submittal documents (including the appropriate referral fees). A submittal that is not complete in terms of the type of documents required will not be sent out on referral. (orig. 7-17-18; am. 12-6-22)

Resubmittal Sufficiency Review (if required): The Case Manager shall have 7 calendar days to review the resubmittal and either send the application out on referral or respond to the applicant explaining any deficiencies in the submittal documents. (orig. 7-17-18; am. 12-6-22)

Process from 1st Referral to Determination

b. 1st Referral and Staff Response:

The referral agencies shall have 14 calendar days to respond in writing to the application. An extension of no more than 30 calendar days may be agreed to by the applicant. (orig. 5-20-08; am. 7-17-18; am. 6-1-19)

The Case Manager shall have 7 calendar days, after the end of the referral period, to provide the applicant with a Staff response inclusive of other referral responses. The response from the Case Manager will include an opinion as to whether the case should proceed forward to the Final Documents phase or if revised documents should be submitted for a subsequent referral process. (orig. 5-20-08; am. 7-17-18)

c. Applicant's Response to 1st Referral:

For the application to be processed in accordance with the example timeframe in the table above, the applicant shall have 14 Calendar days to address in writing any issues identified by the Case Manager or any referral agency and resubmit revised documents for the 2nd referral. (orig. 5-20-08; am. 7-17-18)

Regardless of the example timeframe, the applicant shall have a maximum of 180 calendar days to respond to the referral comments or the application will be considered withdrawn. The applicant will

then have to file a new application with the required fees and documents. The Director of Planning and Zoning may extend this 180 calendar day maximum response deadline for additional 180 calendar day periods if, in his/her opinion, the delay in response is for good cause. (orig. 5-20-08; am. 12-21-10; am. 7-17-18)

d. Sufficiency Review and Referral Distribution (2nd Referral):

The Case Manager shall have 7 calendar days to review the submittal and either send the application out on referral or respond to the applicant explaining any deficiencies in the submittal documents. A submittal that is not complete in terms of the type of documents required will not be sent out on referral. All resubmittal documents shall be submitted as a complete package, and not sent in a fragmentary manner. (orig. 7-17-18; am. 12-6-22)

Resubmittal Sufficiency Review (if required): The Case Manager shall have 5 calendar days to review the resubmittal and either send the application out on referral or respond to the applicant explaining any deficiencies in the submittal documents. (orig. 7-17-18)

e. 2nd Referral and Staff Response:

The referral agencies shall have 7 calendar days to respond in writing to the 2nd referral. An extension of no more than 30 calendar days may be agreed to by the applicant. (orig. 5-20-08; am. 7-17-18)

The Case Manager shall have 7 calendar days after the end of the referral period to provide the applicant with a Staff response inclusive of referral agency responses. The response from the Case Manager will include an opinion as to whether the case should proceed forward to the Final Documents phase or if revised documents should be submitted for a subsequent referral process. (orig. 7-17-18)

f. Applicant's Response to 2nd Referral Comments:

The applicant shall have a maximum of 180 calendar days to respond to the referral comments, or the application will be considered withdrawn. The applicant will then have to file a new application with the required fees and documents. The Director of Planning and Zoning may extend this 180 calendar day maximum response deadline for additional 180 calendar day periods if, in his/her opinion, the delay in response is for good cause. (orig. 5-20-08; am. 12-21-10; am. 7-17-18)

g. Additional Referrals and Responses:

For the 3rd Referral, and for any subsequent referrals thereafter, the processing of the application shall follow the same steps identified above in the Sufficiency Review and Referral Distribution (2nd Referral) process, the 2nd Referral and Staff Response process and the Applicant's Response to 2nd Referral process. (orig. 5-20-08; am. 7-17-18)

h. Final Documents:

The final documents shall be comprised of the stamped and signed grading plans and other final documents as identified by the Case Manager. In addition to submitting the final documents electronically, the applicant shall submit hard copies of the plans as specified in the case managers response to the last referral. (orig. 5-20-08; am. 6-1-19)

The applicant shall have a maximum of 180 calendar days to respond to the comments from the case manager, or the application will be considered withdrawn. The applicant will then have to file a new application with the required fees and documents. The Director of Planning and Zoning may extend this 180-calendar day maximum response deadline for additional 180 calendar day periods if, in his/her opinion, the delay in response is for good cause.

i. Determination:

The Case Manager shall have 7 calendar days to review the Final Documents and shall approve, conditionally approve or deny the application. An application shall be approved if it is complete in form, has all required information, includes appropriate control measure for all stages of construction, including final stabilization, the control measures meet the requirements of the MS4 Permit and the provisions of this section. Otherwise, it shall be denied. Any approval or denial shall be in writing with the reasons for denial specifically identified. Annotations on the plans shall be considered sufficient detail of the reasons for denial. (orig. 8-25-86; am. 9-24-91; am. 8-8-95; am. 12-17-02; am. 4-27-04; am. 10-12-04; am. 6-1-19).

j. Request for Reconsideration:

If an application is denied or conditionally approved, the applicant may request in writing, within 21 calendar days after the decision, a reconsideration of the decision by Planning and Zoning. The request for reconsideration shall state specific reasons or changes for the reconsideration. Planning and Zoning shall act upon the request for reconsideration within 10 working days of its receipt. Failure to act shall constitute denial of the request for reconsideration. No appeal to the Board of Adjustment shall be permitted unless a request for reconsideration was previously filed and denied. (orig. 8-25-86; am. 9-24-91; am. 8-8-95; am. 12-17-02; am. 4-27-04; am. 5-20-08)

k. Appeals:

If Planning and Zoning denies the request for reconsideration, the applicant may submit a written appeal to the Board of Adjustment. The appeal must be received by the secretary of the Board of Adjustment within 30 calendar days of the date of denial. (orig. 8-25-86; am. 9-24-91; am. 8-8-95; am. 12-17-02; am. 4-27-04; am. 10-12-04; am. 12-14-04; am. 5-20-08)

l. Permit Limitations:

The permit shall be limited to work shown on the approved plans. Such plans shall contain guidelines, conditions, and/or restrictions as are necessary to comply with the performance standards. At any time during the plan review or in the event unforeseen conditions arise during completion of the project, the County may require revision of the plans as necessary to ensure compliance with the performance standards. (orig. 8-25-86; am. 9-24-91; am. 8-8-95; am. 3-23-99; am. 12-17-02; am. 10-12-04; am. 5-20-08)

m. Amendments:

Modifications to the approved plans are subject to an Administrative Review process. Modifications shall comply with the Plans and Specifications requirements and the performance standards as outlined in this Section, unless relief is granted through the appropriate process. (orig. 8-25-86; am. 3-23-99; am. 10-12-04; am. 7-17-18; am. 6-1-19)

n. Validity:

The approval of plans and specifications shall not be construed as an approval of any violation of the provisions of this section or of any other applicable laws, rules or regulations and shall not prevent the County from thereafter requiring the correction of errors in said plans and specifications or from preventing work being carried on thereunder in violation of this section or any other applicable law, rule or regulation. The issuance of a Grading Permit prior to any Plat approval shall in no way bind the Planning Commission or the Board of County Commissioners in the approval or denial of a Plat application, and the applicant's grading activities are at the applicant's risk. (orig. 8-25-86; am. 9-24-91; am. 8-8-95; am. 12-17-02; am. 10-12-04)

2. Grading Permit Inspections

a. Upon approval by Planning and Zoning, the approved plans will be referred to an Engineering Inspector for permit issuance. (orig. 10-12-04: am. 5-20-08; am. 4-20-10; am. 7-17-18)

b. The County may inspect the site and perform any necessary tests from time to time to ensure compliance with the permit conditions. (orig. 7-17-18).

c. Final inspections shall confirm that the completed structural and/or non-structural water quality control measure operates in accordance with the approved plans. (orig. 6-1-19)

d. All applicable development sites must have operational permanent water quality control measures at the completion of the site. In the case where permanent water quality control measures are part of future phasing, the permittee must have a mechanism to ensure that all control measures will be implemented, regardless of completion of future phases or site ownership. In such cases, temporary water quality control measures must be implemented as feasible and maintained until removed or modified. All temporary water quality control measure must meet one of the design standards in the MS4 Permit. For the purpose of this section, completion of a site or phase shall be determined by the issuance of a certificate of occupancy, use of the completed site area according to the site plan, payment marking the completion of a site control measure, the nature of the selected control measure or equivalent determination of completion as appropriate to the nature of the site. (orig. 6-1-19)

e. Time Limits: The work associated with the permit shall be completed within 2 years of the date of permit issuance, unless an extension has been granted by Transportation and Engineering. A

request for an extension shall be submitted in writing no later than 10 calendar days prior to the expiration of the permit. Transportation and Engineering may grant an extension to the permit up to 1 year. Additional extensions may be granted by Transportation and Engineering to allow the establishment of permanent erosion and sediment control measures. (orig. 8-25-86; am. 9-24-91; am. 8-8-94; am. 3-23-99; am. 12-17-02; am. 10-12-04: am. 5-20-08; am. 10-13-09; am. 7-17-18)

E. Plans and Specifications

1. Grading, Erosion and Sediment Control Plan

The proposed grading, erosion and sediment control plan and specifications shall demonstrate compliance with the performance standards and shall be prepared on sheets 24 inches by 36 inches, or as otherwise approved by Planning and Zoning, and stamped and signed by a Colorado registered professional engineer. (orig. 8-25-86; am. 9-24-91; am. 10-12-04; am. 7-17-18; am. 6-1-19)

For graded areas between 0.5 and one acre, the County may waive the requirement for a topographic map and the requirement that the grading plans be prepared, stamped and signed by a Colorado registered professional engineer, where the applicant demonstrates an engineered grading plan and/or topographic map is not necessary to comply with the performance standards set forth herein. (orig. 9-24-91; am. 8-8-95; am. 12-17-02; am. 10-12-04; am. 7-17-18; am. 6-1-19)

The grading, erosion and sediment control plan shall include the following unless waived or exempted by Planning and Zoning herein. (orig. 8-25-86; am. 9-24-91; am. 10-12-04; am. 7-17-18; am. 6-1-19)

a. A map which shows the items listed below. Acceptable map scales are 1 inch to 10, 20, 30, 40, 50, 60 or 100 feet. (orig. 8-25-86; am. 9-24-91; am. 10-12-04)

(1) A vicinity map (not to scale) indicating the location of the site relative to the principal roads, lakes or dams, and watercourses in the area. (orig. 8-25-86; am. 9-24-91)

(2) A title block which includes the title of the Grading Plan, purpose and nature of the grading project and, if applicable, states the use of earth material to be removed from the site. The name of the engineer who prepared the plans should also be included in the title block. (orig. 8-25-86; am. 9-24-91)

(3) The complete site boundary and locations of any easements and Rights-of-Way traversing and adjacent to the property, appropriately labeled and dimensioned. (orig. 8-25-86)

(4) The location of existing roads, buildings, wells, pipelines, watercourses and other structures, facilities and features of the sites, and the location of all improvements on adjacent land within 50 feet of the site's boundary. (orig. 8-25-86)

(5) The location and nature of known or suspected highly erodible soils or geologic hazard areas. (orig. 8-25-86; am. 9-24-91)

(6) A topographic map which shows the affected area. The map shall show affected areas outside the permit boundaries, such as drainages. Contour lines shall be at 5-foot intervals or at an interval of greater detail if necessary to accurately show topographic features and drainage patterns, and the configuration of the ground before and after grading. The existing and final contours shall be shown at 2-foot intervals for subdivisions within the plains area and contours at 5-foot intervals for subdivisions within the mountain areas including the method utilized to obtain all contour intervals. Contours shall be accurate to within one-half (1/2) contour interval and elevations shall be based on United States Geologic Survey (USGS) sea level datum. Except for access permits, USGS quad maps shall not be accepted as evidence for topographic contours. (orig. 8-25-86; am. 9-24-91; am. 3-23-99; am. 10-12-04; reloc. 12-6-22)

(7) The location, extent and finished surface slopes of all final cut and fill lines. (orig. 8-25-86)

(8) The 100-year flood plain boundaries. (orig. 8-25-86)

(9) The location of any existing or proposed flood control facilities, wells or Onsite Wastewater Treatment System in the vicinity of the permit area. Temporary access to the well and Onsite Wastewater Treatment System shall be depicted. (orig. 8-25-86; am. 9-24-91; am. 7-17-18; am. 6-1-19)

(10) The location where any earth materials and topsoil will be stockpiled. Include estimated stockpile volume. If the stockpile will reach into adjacent properties, approval from the property owner shall be required. (orig. 8-25-86; am. 9-24-91; am. 7-17-18)

(11) The north arrow, the scale, and the date. (orig. 8-25-86)

(12) The general location and character of vegetative cover on the site and the location of all major rock outcrops. (orig. 8-25-86; am. 9-24-91)

b. Typical cross sections (not less than two) of all existing and proposed graded areas taken at intervals not exceeding 200 feet and at locations of maximum cuts and fills where such cuts and/or fills exceed 10 feet in height. (orig. 8-25-86; am. 9-24-91)

c. A table of the volume of cut, volume of fill, volume of material to be exported offsite, the steepest proposed slopes, the total area of land disturbance, the existing impervious area, the proposed impervious area (total impervious area for the site) and the area of land disturbance treated by a water quality control measure per the SDDTC. An example of this table is shown below and the table shall be placed on page 1 of the plan set. (orig. 8-25-86; am. 9-24-91; am. 6-1-19; am. 12-6-22)

Total Area of Land Disturbance	acres
Volume of Cut	cy
Volume of Fill	cy
Volume of Material to be Exported Offsite	cy
Existing Impervious Area	acres
Proposed Impervious Area	acres
Area of Land Disturbance Treated by a Permanent Water Quality Control Measure	acres
Steepest Proposed Slope	H:V

d. The projected schedule of operations, including the following dates. The schedule dates must correspond to the permitted construction timeframe following approval: (orig. 8-25-86; am. 12-6-22)

(1) Commencement of work, including days and hours of operation. (orig. 8-25-86; am. 9-24-91)

(2) Start and finish of rough grading. (orig. 8-25-86)

(3) Completion of work in any watercourse. (orig. 8-25-86)

(4) Completion of grading, erosion and sediment control measures (Best Management Practices, BMP's). (orig. 8-25-86; am. 10-12-04; am. 6-1-19; am. 12-6-22)

(5) Maintenance schedule for grading, erosion and sediment control BMP's. (orig. 9-24-91; am. 10-12-04; am. 6-1-19)

(6) Completion of any required landscaping. (orig. 8-25-86)

e. The proposed grading, erosion and sediment control plan shall include permanent and, if applicable, temporary erosion and sediment control BMP's. The plans shall identify all structural and non-structural control measures for the applicable construction activities. The plan must contain installation and implementation specifications or a reference to the document with installation and implementation specifications for all structural control measures. A narrative description of non-structural control measures must be included in the plan. Revegetation plans shall include the seed mixture(s) including species and variety, type of seedbed preparation and method of seeding, seeding rates, seeding dates, type and application rates of fertilizer and mulch, and irrigation facilities and methods if applicable. Seed mix shall be based on the Jefferson Conservation District recommendations and/or a Planning and Zoning approved alternative. Seeding alone is not erosion control until vegetation is established. Seeding shall be combined with applicable erosion control structural BMP's until vegetation is established. (orig. 9-24-91; am. 10-12-04; am. 7-12-05; am. 7-17-18; am. 6-1-19)

f. At a minimum, initial and final construction phases are required for all grading, erosion and sediment

control plans. (orig. 7-17-18)

g. Clearly and legibly show BMPs on the plan and include standard notes and associated details for the BMPs shown on said plan. (orig. 7-17-18; am. 6-1-19)

h. If a Grading Permit Application requires an Improvement Security, a detailed improvements list is required. If the Grading Permit Application does not require an Improvement Security, the quantity of each erosion and sediment control BMP shall be provided. (orig. 6-1-19; am. 12-17-19; am. 12-6-22)

2. Soil/Geologic Investigation Report

If a soils and/or geologic investigation report is required by the County, it shall be prepared and signed by a qualified professional geologist or Colorado registered professional engineer. The report shall contain all the following as they may be applicable to the subject site: (orig. 8-25-86; am. 9-24-91; am. 8-8-95; am. 12-17-02; am. 10-12-04)

a. A site map showing the topographic features of the site and locations of all soil borings and test excavations. (orig. 8-25-86)

b. A classification of the soil types, laboratory test data, and consequent evaluation regarding the distribution and nature of existing soils. (orig. 8-25-86; am. 9-24-91)

c. A description of the geology of the site and adjacent areas when pertinent to the site. (orig. 8-25-86)

d. A suitably scaled map and cross sections showing all identified areas of historic or potential instability within and adjacent to the permit area. An evaluation of the stability of natural slopes and any proposed cut and fill slopes. (orig. 8-25-86; am. 9-24-91)

e. A description of known or inferred groundwater or excessive moisture conditions. (orig. 8-25-86; am. 9-24-91)

f. A description of the soil and geologic investigative techniques employed. (orig. 8-25-86)

g. A log for each soil boring and test excavation showing elevation at ground level and the depth of each soil or rock strata. (orig. 8-25-86)

h. Recommendations for grading procedures and specifications, including methods for excavation and subsequent placement of fill. (orig. 8-25-86)

i. Recommendations for mitigation of geologic hazards and constraints. (orig. 8-25-86; am. 12-6-22)

j. The time of year the field work was done and a list of references and other supportive data. (orig. 8-25-86)

k. Soil parameters to be used in the design of retaining walls. (orig. 9-24-91; am. 12-6-22)

l. Infiltration testing shall be completed for each control measure that utilizes infiltration. At least two tests per control measure are required. The testing shall be at an appropriate elevation and location to adequately evaluate the underlying strata. A Factor of Safety of 2 shall be applied to the final infiltration rate to account for infiltration degradation over time (orig. 12-6-22)

3. Materials Handling Plan

The proposed materials handling plan shall include BMP's for controlling waste and spill prevention and containment. (orig. 10-12-04)

F. Performance Standards for All Land Disturbance Activities

1. Control measures must prevent pollution or degradation of state waters. Control measures must also be appropriate for the specific construction activity, the applicable pollutant sources, and phase of construction. Appropriate control measures must be implemented prior to the start of construction activity, must control potential pollutants during each phase of construction, and must be continued through final stabilization. Appropriate structural control measures must be maintained in operational condition. (orig. 6-1-19)

2. Control measures must be selected, designed, installed, implemented, and maintained to provide control of all potential pollutants, such as but not limited to sediment, construction site waste, trash, discarded building materials, concrete truck washout, chemicals, sanitary waste, and contaminated soils in

discharges to the MS4 and/or waterways. At a minimum pollutant sources associated with the following activities (if part of the applicable construction activity) must be addressed: (orig. 6-1-19; am. 12-6-22)

a. Land disturbance and storage of soils. (orig. 6-1-19)

b. Vehicle tracking. (orig. 6-1-19)

c. Loading and unloading operations. (orig. 6-1-19)

d. Outdoor storage of construction site materials, building materials, fertilizers, and chemicals

e. Bulk storage of materials. (orig. 6-1-19)

f. Vehicle and equipment maintenance and fueling. (orig. 6-1-19)

g. Significant dust or particulate generating processes. (orig. 6-1-19)

h. Routine maintenance activities involving fertilizers, pesticides, detergents, fuels, solvents, and oils. (orig. 6-1-19)

i. Concrete truck/equipment washing, including the concrete truck chute and associated fixtures and equipment. (orig. 6-1-19)

j. Dedicated asphalt and concrete batch plants. (orig. 6-1-19)

k. Other areas or operations where spills can occur. (orig. 6-1-19)

l. Other non-stormwater discharges including construction dewatering not covered under the Construction Dewatering Discharges general permit and wash water that may contribute pollutants to the MS4 and/or waterways. (orig. 6-1-19)

3. No Impedance to Natural Water Flow

a. No work shall be done which may obstruct, impede or interfere with the flow of storm water in overland flows, natural drainageways, unimproved channels or watercourses, or improved ditches, channels or canals in such a manner as to cause flooding that adversely impacts adjacent and downstream properties. Any activity taking place in an area zoned Floodplain Overlay District shall meet the requirements of the Floodplain Overlay District section of this Zoning Resolution. (orig. 8-25-86; am. 9-24-91; am. 12-17-02; am. 7-17-18)

b. Construction equipment shall be kept out of watercourses except when necessary to perform work on the approved plans. Where in-channel work is designated on approved plans, precautions shall be taken to stabilize the work area during construction to minimize erosion. The channel, including bed and banks, shall be stabilized immediately after in-channel work is completed. (orig. 9-24-91; am. 6-1-19)

c. Where a drainageway will be crossed by construction vehicles regularly during construction, a temporary crossing shall be provided. A permit may be required from the U.S. Army Corps of Engineers and the Environmental Protection Agency prior to any disturbance in waters of the United States or federally regulated wetlands. (orig. 9-24-91; am. 12-17-02; am. 10-12-04)

4. Excavation

Excavations shall be constructed and/or protected so that they are stable and do not endanger life or property. (orig. 8-25-86; am. 9-24-91)

5. Excavation Slope

a. The slope of cut surfaces of permanent excavations shall not be steeper than 2 horizontal to 1 vertical (approximately 25 degrees). Steeper slopes may be permitted for grading permits with the approval of the County, provided it can be adequately demonstrated in a soils/geologic report that such slopes are stable and will not undergo accelerated erosion. The County may require the excavation to be made with a cut face flatter in slope than 2 horizontal to 1 vertical (2H:1V) if soils/geologic information submitted shows that flatter slopes are necessary for stability, adequate revegetation or maintenance. Cut slopes shall be rounded into the existing terrain to produce a contoured transition from cut face to natural ground. (orig. 8-25-86; am. 9-24-91; am. 8-8-95; am. 12-17-02; am. 6-1-19)

b. The slope of cut surfaces which are 5 feet in height or less and are in competent bedrock may be steeper than 2H:1V, but shall be no steeper than 1 1/2H:1V. Steeper slopes may be permitted for grading permits with the approval of the County, provided it can be adequately demonstrated in a soils/geologic report that such slopes are stable and will not undergo accelerated erosion. (orig. 9-

24-91; am. 8-8-95; am. 12-17-02; am. 6-1-19)

6. Fill Placement

   Completed fills shall be stable masses of well-integrated material bonded to adjacent materials and to the materials on which they rest. Proper drainage and other appropriate measures shall be taken to ensure continuing integrity of fills. Earth materials shall be used which have no more than minor amounts of organic substances. (orig. 8-25-86)

7. Fill Compaction

   The County will require fills to be compacted to a minimum of 90 percent of maximum density as determined by ASTM D1557 unless prior approval by the County has been granted. ASTM D698 may be used for clays with a high plasticity index. The standard for fill compaction shall not apply to fills of less than 50 cubic yards which are placed on natural terrain with a slope flatter than 5H:1V, are less than 5 feet in depth, are not intended to support structures, and do not obstruct a drainage course. (orig. 8-25-86; am. 9-24-91; am. 8-8-95; am. 12-17-02; am. 10-12-04; am. 7-17-18)

8. Ground Preparation for Fill Placement

   The ground surface shall be prepared to receive fill by removing vegetation, topsoil, and other unsuitable materials. (orig. 8-25-86)

9. Fill Slopes

   The slope of all permanent fills shall not be steeper than 2H:1V. Steeper slopes may be permitted for grading permits with the approval of the County, provided it can be adequately demonstrated in a soils/geologic report that such slopes are stable and will not undergo accelerated erosion. (orig. 8-25-86; am. 9-24-91; am. 8-8-95; am. 12-17-02; am. 6-1-19)

10. Driveways and Private Streets/Roads

    a. All street, road and driveway construction shall meet the Transportation Design and Construction Manual standards. (orig. 12-17-02; am. 10-12-04; am. 11-24-15)

    b. For private streets/roads and driveways including turnarounds the maximum allowable vertical disturbance from the toe of fill to the top of cut measured perpendicular to the existing contours shall be 25 feet in vertical height. Planning and Zoning may approve vertical disturbance heights greater than 25 feet for grading permits where it is determined that slopes shall be sufficiently stabilized and restored to be congruent with surrounding conditions to the maximum extent practicable and the alignment of the driveway has been placed in the optimal location to allow for minimal disturbance. (am. 7-17-18; am. 6-1-19)

       Relief for grading permits will also be considered if the applicant demonstrates that the proposed grading plan results in less overall land disturbance and that the relief is necessary to comply with the Preservation of Existing Terrain and Vegetation and Impact Mitigation Standards below. In determining whether to approve or disapprove the request, all technical evaluations, relevant factors, standards specified in other sections, and whether the applicant has adequately addressed the provisions of this Zoning Resolution shall be considered. (orig. 8-8-95; am. 11-12-02; am. 12-17-02; am. 7-1-03; am. 10-12-04; am. 3-26-13; am. 11-24-15; am. 7-17-18; am. 6-1-19)

       (1) Parking areas adjacent to building structures and drainage facilities not a part of the streets/roads will not be considered as vertical disturbance. (reloc. 7-17-18)

    c. Widths (including shoulders) of driveways and private streets/roads shall conform to the Transportation Design and Construction Manual. (orig. 8-8-95; am. 11-12-02; am. 11-24-15)

11. Protection of Adjacent Structures

    Foundations or flatwork which may be affected by any excavation shall be underpinned or otherwise protected against settlement and shall be protected against lateral movement. Fills or other surcharge loads shall not be placed adjacent to any building or structure unless such building or structure is capable of withstanding the additional loads caused by such fill or surcharge. (orig. 8-25-86)

12. Setbacks

    a. Setbacks for all grading, erosion and sediment control activities shall be at least 7 feet from property boundaries and at least 25 feet from off-site occupied structures. Planning and Zoning may waive setback requirements for land disturbance provided it can be adequately demonstrated that activities

occurring within setback limitations will not adversely affect adjacent property or structures. A letter prepared by a Colorado registered professional engineer will be required that addresses the following:(orig. 8-25-86; am. 9-24-91; am. 8-8-95; am. 3-23-99; am. 4-27-04; am. 5-20-08; am. 6-1-19; am. 12-6-22)

i. Identify any potential issues caused by grading, erosion and sediment control activities relating to existing infrastructure, drainage patterns or visual and safety impacts. (orig. 12-6-22)

ii. Provide justification and rationale demonstrating that there will be no adverse impacts to adjacent property owners as a result of the proposed land disturbance. (orig. 12-6-22)

b. Grading for streets/roads and driveways is exempt from setback requirements if it can be adequately demonstrated that grading activities will not adversely affect adjacent properties or structures in terms of, but not limited to, runoff and slope stability. (orig. 9-24-91; am. 7-17-18)

13. Stormwater

Any required drainage and infiltration structures and devices shall be designed and constructed in accordance with standards and criteria established in the Storm Drainage Design and Technical Criteria and as listed below. (orig. 8-25-86; am. 9-24-91; am. 12-17-02; am. 10-12-04; am. 7-17-18; am. 6-1-19)

a. Drainage Structures and Devices: All drainage facilities shall be designed to carry surface and subsurface water to the nearest adequate street, storm drain, and natural watercourse or other juncture. (orig. 8-25-86)

b. Water Accumulation: All finished areas shall be graded and drained such that water will not pond or accumulate except where the end use is a pond, reservoir infiltration area or structure or detention basin. Drainage shall be affected in such a manner that it will not cause erosion or endanger the stability of any cut or fill slope or any building or structure. (orig. 8-25-86; am. 9-24-91; am. 10-12-04; am. 7-17-18)

c. Protection of Adjoining Property: When surface drainage is discharged onto any adjoining property, it shall be discharged in such a manner that it will not cause an increased hazard to the stability of any cut and fill slope or any building or structure. (orig. 8-25-86; am. 9-24-91)

d. Subsurface Drainage: Cut and fill slopes shall be provided with subsurface drainage as necessary for stability. (orig. 8-25-86)

14. Erosion and Sediment Control

The following shall apply to the control of erosion and sediment from land disturbance activities: (orig. 8-25-86; am. 10-12-04)

a. To the maximum extent practicable and in conformance with F.1., above, implementation of the erosion and sediment control plan shall precede grading activities. (orig. 9-24-91; am. 10-12-04; am. 12-6-22)

b. Upon completion of land disturbance activities, disturbed areas, except for rock cuts and fills, shall be stabilized by adequate vegetative cover consisting of at least 70% of pre-existing vegetation conditions or other permanent soil erosion control measures which prevent accelerated erosion. (orig. 8-25-86; am. 9-24-91; am. 10-12-04; am. 7-17-18)

(1) Cuts and fills accomplished for all roads, driveways and other vehicular access shall be stabilized with adequate vegetative cover or other permanent soil erosion control measures which prevent accelerated erosion, unless the cut is in competent bedrock. (orig. 9-24-91)

(2) No project shall cause accelerated or increased off-site erosion. (orig. 9-24-91; am. 10-12-04)

c. To the maximum extent practicable, sediment caused by accelerated soil erosion shall be removed from runoff water before leaving the site. (orig. 9-24-91; am. 10-12-04)

d. All land disturbing activities shall be designed, constructed, and phased in such a manner as to minimize the exposure of disturbed areas and to prevent accelerated soil erosion to the maximum extent practicable. (orig. 9-24-91; am. 10-12-04)

e. Cut and fill slopes shall be stabilized, and surface water damage to cut and fill slopes shall be prevented. (orig. 8-25-86)

f. Fugitive dust emissions shall be controlled using the best available control technology as defined by

the Colorado Department of Public Health and Environment as of the date of permit issuance. (orig. 8-25-86; am. 9-24-91)

g. All temporary and permanent soil erosion and sediment control practices shall be maintained and repaired as needed to assure continued performance of their intended function in accordance with the details in the approved grading plans. (orig. 9-24-91; am. 10-12-04; am. 7-17-18)

h. All topsoil, where physically practicable, shall be salvaged and no topsoil shall be removed from the site except as set forth in the approved plans. Topsoil and overburden shall be segregated and stockpiled separately. Topsoil and overburden shall be redistributed within the graded area after rough grading to provide a suitable base for areas which will be seeded and planted. Runoff from the stockpiled area shall be controlled to prevent erosion and resultant sedimentation of receiving water. (orig. 8-25-86; am. 9-24-91)

i. Runoff shall not be discharged from the site in quantities or at velocities substantially above those which occurred before land disturbance except into drainage facilities whose design has been specifically approved by the County prior to the permit approval. (orig. 8-25-86; am. 3-23-99; am. 12-17-02; am. 10-12-04)

j. The landowner and/or contractor shall take reasonable precautions to ensure that vehicles do not track or spill earth materials on to streets/roads and shall immediately remove such materials if this occurs. (orig. 8-25-86; am. 12-17-02; am. 10-12-04)

k. Should an increase in sediment discharge occur or become imminent, the landowner and/or contractor shall immediately take all necessary steps to control such discharge. The landowner and/or contractor shall take prompt action to resolve emergency problems. (orig. 8-25-86; am. 12-17-02; am. 10-12-04)

l. Permanent or temporary soil stabilization measures shall be applied to disturbed areas within 14 days after final grade is reached on any portion of the site. Soil stockpiles shall be permanently or temporarily stabilized within 14 days if the stockpile is not being actively utilized for construction purposes. Soil stabilization measures shall be applied within 14 days to disturbed areas which may not be at final grade, but will be left dormant for longer than 60 days. (orig. 9-24-91; am. 7-17-18)

15. Geologic, Floodplain, Wildfire, and Dipping Bedrock Hazards

Any activity taking place in an area zoned Geologic Hazard Overlay District or Floodplain Overlay District, or Wildland Urban Interface Overlay District, or Dipping Bedrock Overlay District shall meet the requirements of the appropriate sections of this Zoning Resolution. Land disturbance activities shall not create or aggravate unstable slopes, rockfall, landslide, or subsidence hazards or increase the risk of wildfire, flooding, or dipping bedrock hazards. (orig. 8-8-95; am. 3-23-99; am. 10-12-04: am. 10-4-22)

16. Preservation of Existing Terrain and Vegetation and Impact Mitigation

a. Grading for cut and fill slopes shall not result in a staircase effect, except that retaining walls are permitted per paragraph “e.” below. The edges of graded areas shall blend into the surrounding natural terrain/topography and contour of the land. (orig. 8-8-95; am. 11-12-02)

b. The proposed grading shall occur in such a manner that it avoids, to the extent practicable, all rock outcroppings, existing trees over 6 inches in caliper, vegetation over 8 feet in height, and riparian, wetland and critical wildlife areas. If from the original documentation and/or field investigation it appears that a less impactive alternative exists, the County may require the grading plan to be revised. (orig. 8-8-95; am. 12-17-02)

c. Excess material shall be graded in a manner which is similar to the natural topography and shall not be cast over the side of cut or fill slopes. (orig. 8-8-95; am. 11-12-02)

d. Cut slopes that are in rock and are intended to be left exposed shall be graded to obtain a natural looking appearance, to the extent possible, in form to blend with surrounding terrain. (orig. 8-8-95; am. 11-12-02; am. 10-12-04)

e. Retaining walls shall not exceed a maximum height of twelve (12) feet and shall be faced with stone or constructed with textured earth colored material that is identified in the grading plan. If a series of retaining walls is required, the horizontal distance between walls shall be a minimum of 4 feet. The minimum distance between walls shall be increased to 6 feet if either wall exceeds 8 feet in height. Retaining walls greater than 36 inches in height shall be constructed in accordance with the design prepared by a Colorado registered professional engineer. The design may require consultation with

a geotechnical engineer, shall consider such factors as expansive soils, steep slopes and vehicles or structures near the walls, and shall include the following: (orig. 8-8-95; am. 11-12-02; am. 12-17-02; am. 7-1-03; am. 10-12-04; am. 7-17-18)

(1) Construction plans indicating how the proposed wall height will vary along its length. (orig. 10-12-04)

(2) Details with elevations showing top and bottom of wall for critical points along the wall length. (orig. 10-12-04)

(3) Supporting calculations that demonstrate an adequate factor of safety (minimum 1.5) for bearing capacity, overturning, sliding, and internal stability, including surcharge loads due to sloping backfill, adjacent vehicles and structures. When global stability analysis is required the minimum factor of safety is 1.3 for both the temporary and permanent conditions. (orig. 10-12-04; am. 12-6-22)

f. The site shall be designed to use existing topography and existing vegetation to screen site disturbance. (orig. 8-8-95; am. 10-12-04)

g. Revegetation plans shall be similar to existing vegetation and feature the prominent use of plants which are indigenous to the area or as approved by the County. Seeding methods such as hydroseeding, drilling, seeding and raking in, or other seeding method may be required when necessary to quickly and effectively establish a groundcover for areas where other types of seeding may be ineffective. (orig. 8-8-95; am. 11-12-02; am. 10-12-04)

h. Any permanent erosion control and drainage improvements that are installed, as a result of land disturbance activities shall be designed to complement and blend with the natural topography of the land. (orig. 8-8-95; am. 10-12-04)

i. Where possible, turnouts shall be provided with the narrowest permissible road to minimize the extent of land disturbance. (orig. 11-12-02; am. 10-12-04)

j. When the grading operations encounter remains of prehistoric people's dwelling sites, remains, or artifacts of historical, paleontological or archaeological significance, the operations shall be temporarily discontinued. The developer shall notify Planning and Zoning, and the developer shall promptly contact the proper authorities to determine the disposition thereof. If required by state or federal authorities, the developer shall preserve the area of historical, paleontological or archaeological significance for a maximum period of 30 days to allow authorities to excavate and recover the items of significance. (reloc. 12-6-22)

17. Materials handling BMP's are required. At a minimum, BMP's shall include controlling waste such as discarded building materials, concrete truck washout, chemicals, litter and sanitary waste, as applicable. In addition, spill prevention and containment BMP's for construction materials, waste and fuel shall be provided, as applicable. (orig. 10-12-04)

18. Maximum allowable height of a temporary stockpile is 50 feet measured from existing grade. The setback of the stockpile measured from the abutting property line to the edge of the stockpile is 2 multiplied by the height of the stockpile. The edge of the stockpile shall be no closer than the grading setback (7 feet from the abutting property line). The slope shall not exceed 3H:1V unless otherwise approved by Planning and Zoning for grading permits based on existing site conditions and topographic constraints. The temporary stockpile shall remain in place no longer than two years unless otherwise approved by Planning and Zoning for grading permits based on site conditions and construction duration. (orig. 11-24-15; am. 7-17-18; am. 6-1-19; am. 12-6-22)

G. Improvement Security

1. As a condition for the issuance of a Grading Permit, the County may require an improvement security in an amount necessary to ensure compliance with the performance standards in the event of default on the part of the applicant or of denial of the case by the Board of County Commissioners. Grading Permits associated with single family attached, detached or duplex residential structures with an active building permit will not require an improvement security. An improvement security is required for improvements in the Right-Of-Way or for improvements which may affect Right-Of-Way. (orig. 8-25-85; am. 9-24-91; am. 8-8-95; am. 3-23-99; am. 12-17-02; am. 7-1-03; am. 10-12-04; am. 10-13-09; am. 6-1-19; am. 12-17-19; am. 12-6-22)

a. Except for rough grading, the amount of the security shall be 100 percent of the cost of all grading

erosion and sediment control items plus 100% of the cost of the work required for public streets/roads and for private streets/roads. The amount of security for rough grading shall be 25 percent of the total cost of rough grading for all lands within the mountains and 10 percent for all lands within plains of the County. A contingency amount equivalent to 10 percent of the total cost of all work shall be added to the security amount. (orig. 3-23-99; am. 12-17-02; am. 7-17-18)

b. The improvement security shall be in the form of cash escrow or a letter of credit. (am. 3-23-99)

c. The improvement security shall remain in effect until final inspections have been made, where required, and all grading work has been accepted by the County. Final acceptance of warranted Public Improvements shall conform to the Jefferson County Land Development Regulation. Upon final acceptance of improvements or warranted Public Improvements, securities will be released. (orig. 8-25-85; am. 9-24-91; am. 8-8-95; am. 12-17-02: am. 5-20-08)

2. Any letter of credit or deposit required pursuant to this section shall be payable to the Board of County Commissioners of Jefferson County and shall be for a minimum of 2 year. (orig. 8-25-86; am. 8-8-95; am. 10-12-04; am. 5-20-08)

H. Permit Completion and Closeout

1. Notice of Intent

a. A completed Form Letter N-2 stating that the final construction and grading are in conformance with the approved overall grading plan and Notice of Intent shall be submitted to Planning & Zoning prior to issuance of the Certificate of Occupancy. Form Letter N-2 shall be completed by a Colorado registered professional engineer. (orig. 6-1-19)

2. Grading Permit

a. The conditions of approval as specified in the approval letter and/or approved plan set. (orig. 8-25-86; am. 6-1-19)

b. Jefferson County staff confirms that the completed control measure operates in accordance with the approved site plan. (orig. 6-1-19)

c. The Certificate of Occupancy for residential structures will be issued once the Grading Permit certification is accepted and the Grading Permit is closed by Jefferson County staff. (orig. 6-1-19)

I. Release of Security for Grading Permits

1. Upon completion of the following, the improvement and/or maintenance securities will be released, and/or a Certificate of Compliance will be issued. (orig. 8-25-86; am. 9-24-91; am. 8-8-95; am. 12-17-02; am. 7-17-18; am. 6-1-19)

a. Applicable provisions of this section. (orig. 8-25-86)

b. The conditions of approval of the Grading Permit. (orig. 8-25-86; am. 6-1-19)

c. Final stabilization of the site, which can include established vegetation, that will prevent accelerated erosion and other erosion control measures, where required. A uniform vegetative cover with a density of at least 70 percent of pre-disturbance levels shall be considered adequate vegetative cover for erosion control measures. (orig. 8-25-86; am. 9-24-91; am. 12-17-02; am. 7-1-03; am. 10-12-04)

d. Receipt of proof of compaction, where the compaction standard applies. Compaction tests shall be taken under the direct supervision of a geotechnical engineer. The geotechnical engineer or his designated representative shall observe grading activities on a full-time basis and shall take sufficient compaction test to enable the engineer to determine that the site is ready for the intended uses and shall so state on the compaction report. Compaction reports shall be signed and sealed and dated by a Colorado registered professional engineer. Compaction reports shall include the moisture density curves, location of test sites, soil types(s), density results, type of test and if a failing test, retesting of the site. The engineer shall provide a complete set of all test and observations and a report stating that the grading activities have been completed in substantial conformance with the approved grading plan, the requirements of this section, and the Land Development Regulation. (orig. 9-24-91; am. 3-23-99; am. 10-12-04)

2. An as-built plan is required by the County for the following:

a. Land disturbance activities that occur in a Floodplain Overlay District.

b. Large fills (greater than 1000 cubic yards).

c. Retaining walls as designated on the approved plans.

d. The construction deviates from the approved plans.

e. Permanent non-structural and structural water quality control measures including dimensions, volume calculations and overall compliance with approved plans.

f. Other activities as required by Performance Guarantee and Warranty Section of the Land Development Regulation. Orig. 9-24-91; am. 8-8-95; am. 12-17-02; am. 10-12-04; am. 7-17-18)

3. Upon completion and acceptance of all items listed on the list of improvements and associated costs, the project performance guarantee may be reduced to the amount shown on the Exhibit A for adequate revegetation and temporary erosion and sediment control. Revegetation means that a density of at least 70 percent of the pre-disturbance levels or equivalent permanent methods have been employed. (orig. 12-17-02; am. 10-12-04)

4. However, upon failure to complete the work, failure to comply with all of the terms of the permit or failure of the erosion and sediment control measures to function properly, the County may perform the required work or cause it to be done and collect from the permittee or surety all costs incurred, including administrative and inspection costs. Any unused portion of a deposit shall be refunded to the permittee after deduction by the County of the cost of the work. (orig. 8-25-86; am. 10-12-04; am. 7-17-18)

J. Enforcement

1. Inspections

The County may inspect the site and perform any necessary tests from time to time to ensure compliance with the permit conditions. (orig. 9-24-91; am. 8-8-95; am. 3-23-99)

2. Suspension and Revocation of Permit

The County may suspend, limit or revoke a permit for violation of any provision of this section, violation of the permit or misrepresentations by permit holder, his agents or his employees or independent contractors under contract with the permittee for a Notice of Intent or Grading Permit for an individual lot or within a common plan of development. The decision of the County to suspend, limit or revoke a permit may be appealed to the Board of Adjustment. No work shall be performed while an appeal is pending except as authorized by the County. (orig. 8-25-86; am. 9-24-91; am. 8-8-95; am. 12-17-02; am. 6-1-19)

3. Enforcement Response

a. The escalation process for enforcement actions includes verbal warnings, written notifications, revocation of permits, denial of plan review, withholding of permits, withholding inspections, stop work orders, issuance of zoning violations (civil process), issuance of illicit discharge violations (civil process), fines associated with the illicit discharge violation and/or using the performance guarantee to hire a separate contractor to complete the work. The escalation process does not have to occur in that order. (orig. 6-1-19; am. 12-6-22)

b. The escalation process for chronic and recalcitrant violators of control measure requirements includes verbal warnings, written notifications, revocation of permits, denial of plan review, withholding of permits, withholding inspections, stop work orders, issuance of zoning violations (civil process), issuance of illicit discharge violations (civil process), fines associated with the illicit discharge violation and/or using the performance guarantee to hire a separate contractor to complete the work. The escalation process does not have to occur in that order. (orig. 6-1-19; am. 12-6-22)

3. Court Action

Nothing in this section shall be construed to prevent the Attorney's Office, at their discretion, from filing a court action based upon a violation or potential violation of this section. (orig. 3-23-99)

4. Right of Entry

Whenever necessary to enforce the provisions of this section the County can enter the premises at all reasonable times to perform any duty imposed by this section. If such entry is refused, the County shall

have recourse to every remedy provided by law to secure entry. If a Land Disturbance Permit is suspended or revoked, or if a Stop Work Order has been issued, the County shall have the right to enter the site to complete the work allowed under the grading permit. (orig. 8-25-86; am. 9-24-91; am. 8-8-95; am. 3-23-99; am. 12-17-02; am. 10-12-04; am. 7-17-18)

5. Stop Work Orders

   When any work is being performed which is not in compliance with an approved permit and/or the provisions of this section or any other applicable law, rule or regulation, the County can order the work stopped by serving written notice on any personnel engaged in performing the work. Such person shall immediately stop such work until authorized by the County to proceed. If there are no persons present on the premises, the notice may be posted in a conspicuous place and the notice shall state the nature of the violation. The notice shall not be removed until the violation has been vacated or authorization to remove the notice has been issued. Failure to comply with any Stop Work Order is a violation of the Zoning Resolution, the Grading Permit and/or the Notice of Intent. (orig. 8-25-86; am. 9-24-91; am. 8-8-95; am. 3-23-99; am. 12-17-02; am. 10-12-04; am. 7-17-18)

6. Violations of Other Regulations

   Violations of this section may also cause violations of other State and/or Federal regulations and result in additional fines and penalties. (am. 10-12-04)

STORM DRAINAGE DESIGN AND TECHNICAL CRITERIA – CLEAN COPY

Jefferson County
Storm Drainage Design & Technical Criteria

JEFFERSON COUNTY, COLORADO PLANNING AND ZONING DIVISION

Revision Dates

The Storm Drainage Design and Technical Criteria was prepared by WRC Engineering, Inc. in May 1987 and was adopted by the Board of County Commissioners of Jefferson County, Colorado, and has since been amended on the following dates:

March 19, 1996

May 12, 1998

May 27, 2003

November 25, 2003

October 13, 2009

October 1, 2013 (Temporary Regulation Amendment)

April 1, 2014

November 24, 2015

July 17, 2018

June 1, 2019

December 17, 2019

XXXXX XX, XXXX

Jefferson County Planning and Zoning Division

100 Jefferson County Parkway, Suite 3550, Golden, Colorado 80419

303-271-8700 • http://planning.jeffco.us

Table of Contents

Chapter 1 General Provisions

1.1 Short Title
1.2 Jurisdiction
1.3 Purpose and Effect
1.4 Enactment Authority
1.5 Amendment and Revisions
1.6 Enforcement Responsibility
1.7 Review and Approval
1.8 Alternative Standard Requests & Minor Variation Requests
1.9 Interpretation
1.10 Relationship to Other Standards
1.11 Abbreviations

Chapter 2 Drainage Planning Submittal Requirements

2.1 Introduction
2.2 Phase I Drainage Report
2.3 Phase II Drainage Report
2.4 Phase III Drainage Report
2.5 Abridged Drainage Report
2.6 Exception to The Requirement for a Drainage Report
2.7 Construction Plans
2.8 As-Built Drawings and Final Acceptance Certificate

Chapter 3 Drainage Policy

3.1 Introduction
3.2 Basic Principles
3.3 Regional and Local Planning
3.4 Planning and Design

Chapter 4 Floodplain Regulations

4.1 Introduction

Chapter 5 Rainfall

5.1 Introduction
5.2 Jefferson County Rainfall Zones
5.3 Colorado Urban Hydrograph Procedure Design Storms
5.4 Time-Intensity-Frequency Curves

Chapter 6 Runoff

6.1 Introduction
6.2 Rational Method
6.3 Colorado Urban Hydrograph Procedure
6.4 Storm Flow Analysis

Chapter 7 Open Channels

7.1 Introduction
7.2 Channel Types
7.3 Flow Computation
7.4 Design Standards for Major Drainageways
7.5 Design Standards for Small Drainageways
7.6 Street/Roadside Ditches
7.7 Channel Rundowns

Chapter 8 Storm Sewers

8.1 Introduction
8.2 Construction Materials
8.3 Hydraulic Design
8.4 Vertical Alignment
8.5 Horizontal Alignment
8.6 Pipe Size
8.7 Manholes
8.8 Checklist

Chapter 9 Storm Sewer Inlets

9.1 Introduction
9.2 Standard Inlets
9.3 Inlet Hydraulics
9.4 Inlet Spacing
9.5 Inlet Capacity

Chapter 10 Streets/Roads

10.1 Introductions
10.2 Function of Streets in the Drainage System
10.3 The Allowable use of Streets/Roads as a Drainage System
10.4 Hydraulic Evaluation

Chapter 11 Culverts

11.1 Introduction
11.2 Culvert Hydraulics
11.3 Culvert Design Standards
11.4 Design Example
11.5 Culvert Sizing Criteria
11.6 Checklist

Chapter 12 Hydraulic Structures

12.1 Introduction
12.2 Conduit Outlet Structures
12.3 Channel Grade Control Structures (Check And Drop Structures)
12.4 Bridges
12.5 Irrigation Ditch Crossings

Chapter 13 Storm Water Quality Management Control

13.1 Introduction
13.2 Temporary Erosion Control for Construction Activities
13.3 Permanent Controls for Storm Water Quality Management

Chapter 14 Detention

14.1 Introduction
14.2 Detention Methods
14.3 Design Criteria
14.4 Design Standards for Open Space Detention
14.5 Design Standards for MPLD
14.6 Design Standards for Parking Lot Detention
14.7 Design Standards for Underground Detention
14.8 Design Standards for Combined Detention Ponds

Appendix

Checklist
Standard Forms

Standard Details

List of Tables

201 Drawing Symbol Criteria and Hydrology Review
501 Design Point Rainfall Values
502 CUHP Design Storms for Jefferson County (A-D)
503 Time-Intensity-Frequency Tabulation
701 Street/Roadside Ditch Capacities
801 Storm Sewer Alignment and Size Criteria
802 Energy Loss Coefficient Bends at Manholes
803 Manhole and Junction Losses
901 Standard Inlets
1001 Allowable Use of Streets/Roads for Minor Storm Runoff
1002 Allowable Use of Streets/Roads for Major Storm Runoff
1003 Allowable Flow Depths for Standard Street Templates
1004 Allowable Cross Street Flow
1005 Allowable Culvert Overtopping
1101 Hydraulic Data for Culverts
1102 Culvert Rating Example
1301 Possible Sources of Pollutants in Storm Water
1401 Weir Flow Coefficients

List of Figures

501 Rainfall Zones
502 Time-Intensity-Frequency Curves (A-D)
701 Roughness Coefficient for Grassed Channels
702 Street/Roadside Ditch Sections
703 Trickle Channel Details
704 Channel Rundown Details
801 Hydraulic Properties Circular Pipe
802 Hydraulic Properties Horizontal Elliptical Pipe
803 Hydraulic Properties Arch Pipe
901 Inlet Design Example - Minor Storm
1401 Detention Pond Outlet Configurations
1402 Detention Pond Details
1403 Weir Design Example
1404 Outlet Design Example
1405 Underground Detention
1406 Pond Forebay with Dissipator
1407 Embankment Protection Details and Rock Sizing Chart
1408 Mountain Porous Landscape Design

Chapter 1 - General Provisions

1.1 Short Title

These regulations together with all future amendments will be known as the "Jefferson County Storm Drainage Design and Technical Criteria" (hereafter called *CRITERIA*) as referenced in the Jefferson County Land Development Regulation (hereafter called *LDR) and Jefferson County Zoning Resolution (hereafter called ZR)*.

1.2 Jurisdiction

These *CRITERIA* will apply to all land within the unincorporated areas of the County, including any public lands. These *CRITERIA* will apply to all facilities constructed on County ROW, easements dedicated for public use, and to all privately owned and maintained drainage facilities, including but not limited to detention ponds, water quality facilities, storm sewers, inlets, manholes, culverts, swales and channels.

1.3 Purpose and Effect

Presented in these *CRITERIA* are the minimum design and technical criteria for the analysis and design of storm drainage facilities. All subdivisions, rural clusters, rezonings, site development plans, site approvals, land disturbance permits or any other proposed development or construction submitted for approval under the provisions of the *LDR* will include adequate storm drainage system analysis and appropriate drainage system design. Such analysis and design will meet or exceed the criteria set forth herein. Options to the provisions of these *CRITERIA* may be suggested by the applicant. The applicant will have the burden of showing that the options are equal or better. Policies and technical criteria not specifically addressed in these *CRITERIA* will follow the provisions of the Mile High Flood District (hereafter called MHFD) "Urban Storm Drainage *Criteria Manual*" (hereafter called *Manual*). The applicant is also referred to the Colorado Department of Transportation Standard Plans for additional design details not covered in these *CRITERIA* or the *Manual*. Drainage facilities in place or under construction at the time of *CRITERIA* adoption will be accepted without regard to the provisions of these *CRITERIA*.

1.4 Enactment Authority

The *LDR* has been adopted pursuant to the authority conferred within: Article 28 of Title 30 (County Planning); Article 2 of Title 43 (State, County and City Highway Systems); Article 20 of Title 29 (Land Use Control and Conservation); and other applicable sections of the CRS, as amended. As part of the authority provided by which the County promulgates the *LDR*, these *CRITERIA* are adopted by resolution.

The *LDR* refers to these *CRITERIA* being the source of County policy, guidelines, criteria and submittal requirements for storm water management issues during the development process.

1.5 Amendment and Revisions

These policies and criteria may be amended as new technology is developed and/or if experience gained in the use of these *CRITERIA* indicates a need for revision. Amendments and revisions will be made by resolution.

1.6 Enforcement Responsibility

It will be the duty of the Board of County Commissioners acting through Planning and Zoning to enforce the provisions of these *CRITERIA*.

1.7 Review and Approval

The County will review all drainage submittals for general compliance with these *CRITERIA*. An approval by the County does not relieve the owner, engineer or designer from responsibility of ensuring that the calculations, plans, specifications, construction and record drawings comply with these *CRITERIA*.

Per Colorado Revised Statute 32-11-221, improvements in or improvements that directly outfall to drainageways within the MHFD boundary must meet the requirements of MHFD's Maintenance Eligibility Program. Where this is the case, the County will refer submittals to MHFD and design, construction and revegetation must be approved by MHFD.

1.8 Alternative Standard Requests & Minor Variation Requests

Alternative Standard Requests of these *CRITERIA* will be reviewed and approved in accordance with the applicable sections in the *LDR and ZR*. Any exclusions, exemptions, waivers, and variances shall comply with the terms and conditions of the MS4 permit.

1.9 Interpretation

In the interpretation and application of the provisions of these *CRITERIA*, the following will govern:

1.9.1 In its interpretation and application, the provisions will be regarded as the minimum requirements for the protection of the public health, safety, comfort, convenience, prosperity and welfare of the residents of the County.

1.9.2 Whenever a provision of these *CRITERIA* and any other provisions of the *LDR* or any provision in any law, ordinance, resolution, rule or regulation of any kind, contain any restriction covering any of the same subject matter, whichever restrictions are more restrictive or impose higher standards of requirements will govern.

1.9.3 These *CRITERIA* will not abrogate or annul any permits or approved drainage reports, construction plans, easements or covenants issued before the effective date of these *CRITERIA*.

1.10 Relationship to Other Standards

These *CRITERIA* are consistent with the MHFD criteria. If special districts impose a more stringent criteria, this difference is not considered a conflict. If the State or Federal Government imposes stricter criteria, standards or requirements, these will be incorporated into the County's requirement after due process and public hearing(s) needed to modify the County's regulations and standards.

1.11 Abbreviations

As used in these *CRITERIA*, the following abbreviations will apply:

ASP	Aluminized Steel Pipe
BMPs	Best Management Practice(s)
CDOT	Colorado Department of Transportation
CRS	Colorado Revised Statute
CMP	Corrugated Metal Pipe
CSP	Corrugated Steel Pipe
CSPA	Corrugated Steel Pipe Arch
CUHP	Colorado Urban Hydrograph Procedure
EURV	Excess Urban Runoff Volume
FEMA	Federal Emergency Management Agency
FHAD	Flood Hazard Area Delineation
FIRM	Flood Insurance Rate Map
HDPE	High Density Polyethylene Pipe
HP	High Performance Polypropylene Pipe
JCD	Jefferson Conservation District
MDCIA	Minimized Directly Connected Impervious Area
MHFD	Mile High Flood District
MPLD	Mountain Porous Landscape Detention
NOAA	National Oceanic and Atmospheric Administration
RCP	Reinforced Concrete Pipe
ROW	Right-of-Way
USDCMUSDC	Urban Storm Drainage Criteria Manual (Manual)

Chapter 2 - Drainage Planning Submittal Requirements

2.1 Introduction

Drainage reports and plans, construction drawings, specifications and as-built information will be submitted and approved as required by the *LDR* and Building Permit Procedure. All submitted reports will be clearly and cleanly reproduced. Photostatic copies of charts, tables, nomographs, calculations or any other referenced material will be legible. Washed out, blurred or unreadable portions of the report are unacceptable and could warrant resubmittal of the report. The submittal will include a declaration of the type of report submitted (i.e., Phase-I, Phase-II or Phase-III). Incomplete or absent information may result in the report being rejected for review.

A pre-application consultation is suggested of all applicants for all processing steps of the *LDR*. The applicant will consult with Planning and Zoning for general information regarding regulations, required procedures, possible drainage problems and specific submittal requirements.

2.2 Phase I Drainage Report

For development processes that require the submittal of a Phase I Drainage Report, a Phase I Report which complies with the requirements of Section 2.2 must be submitted by the developer or owner.

This report will review at a conceptual level the feasibility and design characteristics of the proposed development. The Phase I Drainage Report will be in accordance with the following outline and contain the applicable information listed:

2.2.1 Phase I Report Contents

The following is an outline of the minimum Phase I Drainage Report requirements.

I. General Location and Description
   A. Location
      1. Vicinity map
      2. City, County, State Highway and local streets within and adjacent to the site or the area to be served by the drainage improvements
      3. Township, range, section, 1/4 section
      4. Major drainageways and facilities
      5. Names of surrounding developments
   B. Description of Property
      1. Area in acres
      2. Ground cover (type of ground cover and vegetation)
      3. Major drainageways
      4. Existing major irrigation facilities such as ditches and canals
      5. Proposed land use
      6. Floodplains delineated by FHAD studies or on FEMA FIRM maps
      7. Significant geologic features

II. Drainage Basins and Sub-Basins
   A. Major Basin Description
      1. Reference and include maps of major drainageway planning studies such as FHAD reports, major drainageway planning reports and FIRMs.
      2. Major basin drainage characteristics, existing and planned land uses within the basin, as defined by Planning and Zoning
      3. Identification of all nearby irrigation facilities which will influence or be influenced by the local drainage
   B. Sub-Basin Description
      1. Discussion of historic drainage patterns of the property in question
      2. Discussion of on-site and off-site drainage flow patterns and impact on development under existing and fully developed

basin conditions as defined by Planning and Zoning

III. Drainage Facility Design

A. General Concept

1. Discussion of concept and typical drainage patterns
2. Discussion of compliance with off-site runoff considerations
3. Discussion of anticipated and proposed drainage patterns
4. Discussion of the content of tables, charts, figures, plates or drawings presented in the report

B. Specific Details (Optional Information)

1. Discussions of drainage problems encountered and solutions at specific design points
2. Discussion of detention storage and outlet design
3. Discussion of maintenance and access aspects of the design
4. Discussion of impacts of concentrating the flow on the downstream properties

C. Specific Details (Required for any proposed modifications to the Floodplain Overlay District)

1. Discussion on whether the floodplain modification will affect off-site property
2. Discussion of the design of the modified watercourse, in conformance with MHFD and County requirements
3. Discussion of the location of the modified watercourse and reason for modifications
4. Discussion of any State and Federal permits that are required for the modification of the watercourse
5. Hydraulic and hydrologic calculations for the 100-year storm demonstrating that the modified watercourse will maintain the flood carrying capacity
6. Discussion of the maintenance requirements and identification of the organization responsible for maintenance
7. A developer and engineer's certifications as required for a Phase III Drainage Report

IV. References

Reference all criteria, master plans and technical information used in support of concept.

2.2.2 Phase I Drawing Contents

(a) General Location Map: Drawings may be 24" x 36" or 22" x 34". A map will be provided in sufficient detail to identify drainage flows entering and leaving the development and general drainage patterns. The map should be at a scale of 1" = 1000' to 1" = 4000' and show the path of all drainage from the upper end of any off-site basins to the defined major drainageways. The map should identify any major facilities from the property (i.e., development, irrigation ditches, existing detention facilities, culverts, storm sewers) along the flow path to the nearest major drainageway.

Basins and divides are to be identified and topographic contours are to be included.

(b) Floodplain Information: A copy of applicable FHAD and/or FIRM maps showing the location of the subject property will be included with the report as outlined in Section 2.2.1. All major drainageways (see Section 3.2.5) will have the floodplain defined and shown on the report drawings.

(c) Drainage Plan: Map(s) of the proposed development at a scale of 1" = 20' to 1" = 100' on a 24" x 36" or 22" x 34" drawing will be included. The plan should show the following:

1. Existing topographic contours at 2-foot maximum intervals. In mountain areas, the maximum interval is 5 feet. The contours should extend a minimum of 100 feet beyond the property lines

2. All existing drainage facilities

3. Approximate flooding limits based on available information

4. Conceptual major drainage facilities including detention basins, storm sewers, swales, riprap and outlet structures in the detail consistent with the proposed development plan

5. Major drainage boundaries and sub-boundaries

6. Any off-site feature influencing development

7. Proposed flow directions and, if available, proposed contours

8. Legend to define map symbols

9. Title block in lower right corner

2.3 Phase II Drainage Report

The purpose of the Phase II Drainage Report is to identify and/or refine conceptual solutions to the problems which may occur on-site and off-site as a result of the development. For development processes that require the submittal of a Phase II Drainage Report, a Phase II Drainage Report which complies with the requirements of Section 2.3 must be submitted by the developer or owner. The report will be prepared by or supervised by an engineer licensed in Colorado. The report will contain a certification sheet as follows:

> "This report (*plan*) for the Phase II drainage design of (*name of Development*) was prepared by me (*or under my direct supervision*) in accordance with the provisions of Jefferson County Storm Drainage Design and Technical Criteria and was designed to comply with the provisions thereof. I understand that Jefferson County does not and will not assume liability for drainage facilities designed by others."
>
> _____
>
> Registered Professional Engineer
>
> State of Colorado No. _____
>
> (*Affix Seal*)

2.4 Phase III Drainage Report

The purpose of the Phase III Drainage Report is to provide final drainage design for a project including design details for drainage facilities.

For development processes that require the submittal of a Phase III Drainage Report, a Phase III Report which complies with the requirements of Sections 2.3 and 2.4 must be submitted by the developer or owner. If applicable, the Phase III Drainage Report must address comments made during review of the Phase II Report.

The report will be prepared by or under the direction of an engineer licensed in Colorado, certified as shown below in for the Phase III report. The report must contain a developer and engineer certification sheet as follows:

> "This report (plan) for the Phase III drainage and water quality design of (name of Development) was prepared by me (*or under my direct supervision*) in accordance with the provisions of Jefferson County Storm Drainage Design and Technical Criteria and was designed to comply with the provisions thereof. I understand that Jefferson County does not and will not assume liability for drainage facilities designed by others."
>
> _____
>
> Registered Professional Engineer
>
> State of Colorado No. _____
>
> (*Affix Seal*)
>
> "(Owner/Applicant) hereby certifies that the drainage facilities for (Name of Development) will be constructed according to the design presented in this report. I understand that Jefferson County does not and will not assume liability for drainage facilities designed or reviewed by my engineer. I also understand that Jefferson County relies on the representations of others to establish that drainage facilities are designed and built in compliance with applicable guidelines, standards or specifications. Review by Jefferson County can therefore in no way limit or diminish any liability which I or any other party may have with respect to the design or

construction of such facilities."

(Owner/Applicant)_____

By: _____

Date _____

The Phase III Drainage Report will be prepared in accordance with the outline shown in Section 2.4.1. The report drawings will follow the requirements presented in Section 2.4.2 below.

Three (3) signed and stamped original copies of the approved Phase III Drainage Plan and Report will be submitted to the County for signature and retention in their files.

2.4.1 Phase II and Phase III Report Contents

The Report will be in accordance with the following outline and contains the applicable information listed:

I. General Location and Description
   A. Location
      1. Vicinity map
      2. Township, range, section, 1/4 section
      3. Local streets within and adjacent to the subdivision with ROW width shown
      4. Major drainageways, facilities and easements within and adjacent to the site
      5. Names of surrounding developments
   B. Description of Property
      1. Area in acres
      2. Ground cover (type of trees, shrubs, vegetation, general soil conditions, topography and slope)
      3. National Resources Conservation Service (NRCS) soils classification map and discussion
      4. Major drainageways
      5. General project description
      6. Irrigation facilities
      7. Proposed land use

II. Drainage Basins and Sub-Basins
   A. Major Drainage Basins
      1. On-site and off-site major drainage basin characteristics and flow patterns and paths
      2. Existing and proposed land uses within the basins if known
      3. Discussion of all drainageway planning or floodplain delineation studies that affect the major drainageways, such as FHAD Studies and Outfall System Planning studies
      4. Discussion of the condition of any channel within or adjacent to the development, including existing conditions, need for improvements and impact on the proposed development
      5. Discussion of the impacts of the off-site flow patterns and paths, under fully developed conditions
      6. Identification of all irrigation facilities within the basin which will influence or be influenced by the local drainage
   B. Sub-Drainage Basins
      1. On-site and off-site minor drainage basin characteristics and flow patterns and paths under historic and developed conditions
      2. Existing and proposed land uses within the basins
      3. Discussion of irrigation facilities that will influence or be impacted by the site drainage
      4. Discussion of the impacts of the off-site flow patterns and paths, under fully developed conditions

III. Drainage Design Criteria
   A. Regulations: Discussion of the optional provisions selected or the deviation from the *CRITERIA*, if any, and its justification

B. Development Criteria Reference and Constraints

1. Discussion of previous drainage studies (i.e., project master plans) for the site in question that influence or are influenced by the drainage design and how the plan will affect drainage design for the site
2. Discussion of the effects of adjacent drainage studies
3. Discussion on drainageways and storage facilities and how they interrelate to water rights
4. Discussion of the drainage impact of site constraints such as streets, utilities, light rail rapid transit, existing structures and development or site plan

C. Hydrological Criteria

1. Identify design rainfall
2. Identify runoff calculation method
3. Identify detention discharge and storage calculation method
4. Identify design storm recurrence intervals
5. Discussion and justification of other criteria or calculation methods used that are not presented in or referenced by these *CRITERIA*

D. Hydraulic Criteria

1. Identify various capacity references
2. Discussion of other drainage facility design criteria used that are not presented in the *CRITERIA*

E. Waivers from CRITERIA

1. Identify provisions by section number for which a waiver is requested
2. Provide justification for each waiver requested

IV. Drainage Facility Design

A. General Concept

1. Discussion of concept and typical drainage patterns
2. Discussion of compliance with off-site runoff considerations
3. Discussion of the content of tables, charts, figures, plates or drawings presented in the report
4. Discussion of anticipated and proposed drainage patterns. Discuss how runoff is conveyed off-site to nearest adequate drainage facility. Discuss flow path and downstream capacity

B. Specific Details

1. Discussion of drainage problems encountered and solutions at specific design points
2. Discussion of detention storage and outlet design
3. Discussion of storm water quality facilities
4. Discussion of maintenance access and aspects of the design
5. Discussion of easements and tracts for drainage purposes, including the conditions and limitations for use

C. Stormwater Storage Facilities

1. Discuss detention pond designs, including release rates, storage volumes and water surface elevations for the EURV and emergency overflow conditions, outlet structure design, emergency spillway design, etc
2. Discuss pond outfall locations and design, including method of energy dissipation
3. Discuss how runoff is conveyed from all pond outfalls and emergency spillways to the nearest major drainageway, including a discussion of the flow path and capacity downstream of the outfall to the nearest major drainageway
4. Discuss maintenance aspects of the design and easements and tracts that are required for stormwater storage purposes

D. Water Quality Enhancement BMPs

1. Discuss the design of all structural water quality BMPs, including tributary areas, sizing, treatment volumes, design features, etc.
2. Discuss how runoff is conveyed from all pond outfalls to the nearest adequate drainage facility, including a discussion of the flow path and capacity downstream
3. Discuss the operation and maintenance aspects of the design and easements and tracts that are required for stormwater quality enhancement purposes

E. Additional Permitting Requirements

1. Section 404 of the Clean Water Act
2. The Endangered Species Act
3. Other local, state or federal requirements

V. Conclusions

A. Compliance with Standards

1. *CRITERIA*
2. Major Drainageway Planning Studies
3. *Manual*

B. Drainage Concept

1. Effectiveness of drainage design to control damage from storm runoff
2. Influence of proposed development on the Major Drainageway Planning Studies recommendation(s)

VI. References

Reference all criteria and technical information used.

VII. Appendices

A. Hydrologic Computations

1. Land use assumptions regarding adjacent properties
2. Initial and major storm runoff at specific design points
3. Historic and fully developed runoff computations at specific design points
4. Hydrographs at critical design points
5. Time of concentration and runoff coefficients for each basin

B. Hydraulic Computations

1. Open channel design
2. Detention area/volume capacity and outlet capacity calculations; depths of detention basins
3. Water Quality Capture Volume Calculations which may include grass swale and buffer calculations (Required for Phase III)
4. Downstream/outfall system capacity (including design storm) to major drainage system. Include a solution to mitigate downstream capacity problems from the development. See Section 3.3.3 for more information
5. Downstream/outfall system capacity for internal, adjoining and connecting major drainageways. Include a solution to mitigate downstream capacity problems from within and adjoining the development. See Section 3.3.3 for more information
6. Emergency spillway sizing calculations
7. Stabilization and grade control improvements and calculations for ditches and drainageways.
8. Energy dissipation at pipe outfalls
9. Culvert capacities (*Required for Phase III*)
10. Storm sewer capacity, including energy grade line (EGL) and hydraulic grade line (HGL) elevations (*Required for Phase III*)
11. Actual street capacity as calculated using the MHFD Spreadsheet. Compare with allowable depths listed in Chapter 10 (*Required for Phase III*)
12. Storm inlet capacity including inlet control rating at connection to storm sewer (*Required for Phase III*)
13. Check and/or channel drop design (*Required for Phase III*)

2.4.2 Phase II and Phase III Drawing Contents

A. Historic Drainage Conditions Plan: All drawings will be 24” x 36” or 22” x 34”in size. The plan should include the following:

1. A map in sufficient detail to identify drainage flows entering and leaving the development and general drainage patterns. The map should be at a scale of 1” = 1000’ to 1” = 4000’ and show the path of all drainage from the upper end of any off-site basins to the defined major drainageways (see Drainage Policy). The map will identify any major construction (i.e., development, irrigation ditches, existing detention facilities, culverts, storm sewers) along the entire path of drainage. Basins and divides are to be identified and topographic contours are to be included.

2. Boundary of the proposed development at a scale of 1” = 20’ to 1” = 100’

3. Existing floodplain limits for all major drainageways (see Section 3.2.3)

4. Existing contours at 2-foot maximum intervals. In mountain areas, a maximum interval of 5 feet may be used if approved by Planning and Zoning. The contours should extend a minimum of 100 feet beyond the property lines

5. Property lines and easements with purposes noted

6. Existing drainage facilities and structures, including irrigation ditches, street/roadside ditches, crosspans, drainageways, gutter flow directions and culverts. All pertinent information such as material, size, shape, slope and location should also be included

7. Overall historic drainage area boundary and drainage sub-area boundaries

8. Definition of flow path leaving the development through the downstream properties ending at a major drainageway or adequate drainage facility

9. Legend to define map symbols (*see Table 201 for symbol criteria*)

10. Title block in lower right hand corner

B. Developed Drainage Conditions Plan: Map(s) of the proposed development at a scale of 1" = 20' to 1" = 100' on a 24" x 36" or 22" x 34" drawing will be included. The plan will show the following:

1. Boundary of the proposed development at a scale of 1" = 20' to 1" = 100'.

2. Existing and proposed contours at 2-feet maximum intervals. In mountain areas, the maximum interval is 5 feet. The contours should extend a minimum of 100 feet beyond the property lines.

3. Property lines and easements with purposes noted.

4. Streets, indicating ROW width, flowline width, curb type, sidewalk and approximate slopes.

5. Existing drainage facilities and structures, including irrigation ditches, street/roadside ditches, crosspans, drainageways, gutter flow directions and culverts. All pertinent information such as material, size, shape, slope and location will also be included.

6. Overall drainage area boundary and drainage sub-area boundaries.

7. Proposed type of street flow (i.e., vertical or combination curb and gutter), street/roadside ditch, gutter, slope and flow directions and crosspans.

8. Proposed storm sewers and open drainageways, including inlets, manholes, culverts and other appurtenances, including riprap protection.

9. Proposed outfall point for runoff from the developed area and facilities to convey flows to the final outfall point without damage to downstream properties.

10. Proposed storm water quality facilities.

11. Routing and accumulation and flows at various critical points for the initial storm runoff listed on the drawing using the format shown in Table 201.

12. Routing and accumulation of flows at various critical points for the major storm runoff listed on the drawing using the format shown in Table 201.

13. Volumes and release rates for detention storage facilities and information on outlet works.

14. Location and elevations of all existing and proposed floodplains affecting the property.

15. Location and (if known) elevations of all existing and proposed utilities affected by or affecting the drainage design.

16. Routing of on-site and off-site drainage flow through the development.

17. Definition of flow path leaving the development through the downstream properties ending at a major drainageway or adequate drainage facility.

18. Legend to define map symbols (see Table 201 for symbol criteria).

19. Title block in lower right hand corner.

20. Detention Pond Summary as shown in Table 201.

2.5 Abridged Drainage Report

When an application is under the threshold to require stormwater detention, Planning and Zoning will accept an abridged drainage report in lieu of a Phase III Drainage Report. The Abridged Drainage Report shall include the following:

1. The standard engineer's and developer's certifications in Section 2.4.

2. Calculations demonstrating that the site meets the requirements in Section 3.3.6 and 3.3.7 to not require stormwater detention and water quality.

3. Narrative and supporting calculations (as needed) demonstrating that the project will be designed to carry surface and subsurface water to the nearest adequate street/roadside ditch, storm drain and/or natural watercourse.

4. Hydraulic and hydrologic calculations for any required and existing drainage structures to demonstrate that they meet the relevant provisions in these *CRITERIA*. If no drainage structures are proposed, information shall be included stating as such.

5. Calculations for any drainageways that impact the property and determination of the required easement width and location.

6. Any other Phase III Drainage Report requirements that impact the property as necessary.

2.6 Drainage Letter

When the application is under the threshold to require stormwater detention, and no stormwater features are proposed, Planning and Zoning will accept a Drainage Letter in the following format.

1. Narrative of the proposed land disturbance activity to include lot size, total impervious area and the proposed use.

2. Statement that all performance standards and applicable regulations are being met.

3. Letter signed and stamped by a Professional Engineer

2.7 Exception to the Requirement for a Drainage Report

Planning Engineering will accept a letter from the applicant stating that there will be no new construction in lieu of a drainage report if all of the following conditions are met:

1. No increase in impervious area and no new construction.

2. The existing facilities on the site were constructed legally.

3. There are no drainageways that impact the property.

2.8 Construction Plans

Where drainage improvements are to be constructed, the final construction plans (24" x 36" or 22" x 34") will be submitted with the Phase III Drainage Report. Approval of the final construction plans by Planning and Zoning is a condition of issuing the construction permits. Four (4) copies of the approved plans will be submitted to the County for file. The plans for the drainage improvements will include but are not limited to:

1. Storm sewers, inlets, outlets and manholes with pertinent elevations, dimensions, type and horizontal control indicated.

2. Culverts, end sections and inlet/outlet protection with dimensions, type, elevations and horizontal control indicated.

3. Channels, ditches and swales (including side/rear yard swales) with lengths, widths, cross-sections and erosion control (i.e. riprap, concrete, grout) indicated.

4. Checks, channel drops, erosion control facilities.

5. Detention pond grading, trickle channels, outlets, forebay, micropool, overflow weir and landscaping.

6. Water Quality/Detention pond cross-section including a 100-year water surface elevation, EURV elevations, micropool, forebay, outlet structure and 1-foot freeboard.

7. Stormwater quality facilities.

8. Other drainage related structures and facilities (including, alternative water quality BMP's, underdrains and sump pump lines).

9. Maintenance access considerations.

10. Overlot grading and erosion and sedimentation control plan (refer to the ZR, Land Disturbance).

11. The hydraulic grade line and energy grade line for all storm sewers will be shown on the profile sheets and calculation included in the Phase III Drainage Report.

The information required for the plans will be in accordance with sound engineering principles, these *CRITERIA* and the County requirements for subdivision designs. Construction documents will include geometric, dimensional, structural, foundation, bedding, hydraulic, landscaping and other details as needed to construct the storm drainage facility. The approved Phase III Drainage Plan will be included as part of the construction documents for all facilities affected by the drainage plan. Construction plans will be signed by a registered professional engineer as being in accordance with the County approved drainage report/drawings.

2.9 As-Built Drawings and Final Acceptance Certificate

As-built drawings for drainage facilities and grading will be submitted in accordance with the Development Agreements, Warranties and Guarantees Section of the *LDR*.

Table 201

Drawing Symbol Criteria and Hydrology

Review Table

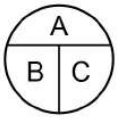

A = Basin Designation
B = Area in Acres
C = Composite Runoff Coefficients

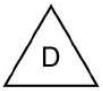

D = Design Point Designation

– – – – Basin Boundary

Summary Runoff Table

(To be placed on drainage plan)

Design Point	Contributing Area (Acres)	Runoff 5 year (CFS)	Peak 100 year (CFS)
XX	XX • XX	XX • X	XX • X

Detention Pond Summary

Pond Number	5-year Detention Volume	100 year Detention Volume	Water Quality Volume	Total Volume	5-Year Release Rate	100-year Release Rate	100-Year Water Elevation
1	X,XXX	X,XXX	X,XXX	X,XXX	X.X	X.X	XXX.X
2	X,XXX	X,XXX	X,XXX	X,XXX	X.X	X.X	XXX.X
3	X,XXX	X,XXX	X,XXX	X,XXX	X.X	X.X	XXX.X
4	X,XXX	X,XXX	X,XXX	X,XXX	X.X	X.X	XXX.X

Chapter 3 - Drainage Policy

3.1 Introduction

The provisions for adequate drainage are necessary to preserve and promote the general health, welfare and economic wellbeing of the County. Drainage is a regional feature that affects all governmental jurisdictions and all parcels of property. This characteristic of drainage makes it necessary to formulate a program that balances both public and private involvement. Overall coordination and master planning must be provided by the governmental units most directly involved, but drainage must be integrated at a regional level.

When planning drainage facilities, certain underlying principles provide direction for the effort. These principles are made operational through this set of policy statements. The application of the policy in turn is facilitated by technical criteria and data.

3.2 Basic Principles

3.2.1 Multi-Purpose Resource

The county encourages the use of stormwater runoff as a multi-purpose resource and to require space allocation for appropriate drainage facilities in the planning of new developments.

Stormwater runoff is a resource that is a subsystem of urbanization. This subsystem should be multi-purpose to satisfy the demands placed on water within urban development. The stormwater resource has the potential for a beneficial use if it is compatible with adjacent land uses and Colorado Water Law. Examples of beneficial use include groundwater infiltration and use in landscape features.

The planning of drainage facilities must be included in the development process. The provision for adequate drainage becomes a competing use for space along with other land uses. If adequate provision is not made in a land use plan for the drainage requirements, storm water runoff will conflict with other land uses and will result in water damages and will impair or even disrupt the functioning of other urban systems.

Drainage facilities can fulfill other purposes aside from just drainage. Facilities that are not typically designed for drainage, such as recreational areas and parking lots, can frequently be designed to provide water quantity and quality benefits.

Elimination or reduction in the size of detention and/or retention facilities is preferred where acceptable groundwater infiltration methods are used.

3.2.2 Water Rights

The county requires that analysis of impacts on water rights be included in the planning and design of proposed drainage facilities.

When the drainage sub-system interferes with existing water rights, the value and use of the water rights are affected. Drainageways and storage facilities frequently interrelate with water rights, which must be addressed when planning new facilities to preserve their integrity.

3.2.3 Major Drainageway

The county defines a major drainageway as any drainage flow path with a tributary area of 130 acres or more.

3.3 Regional and Local Planning

3.3.1 Post Development Flow Conditions

The county encourages infiltration and for post development flow conditions to be in a manner and quantity (flow rate) as to not do more harm than the predevelopment flow within the drainage basin, unless the owner/developer can obtain approval and/or easements from the affected property owner(s).

Colorado follows the modified civil law rule that the owner of upstream property possesses a natural easement on land downstream for drainage of surface water flowing in its natural course. Natural drainage conditions can be altered by the owner of the upstream land provided the water is not sent down in a manner or quantity to do more harm to the downstream land than formerly. During the development process, if water is allowed to flow into the development in its historic manner and quantity and is discharged in the historic manner and quantity, the alterations are generally acceptable. When the development alters the natural drainage into the development in a manner

or quantity that results in more harm to the downstream land, it may violate the modified civil law rule. Likewise, if the development does not return the drainage to the natural drainage conditions or does so in a manner or quantity that results in more harm, it may violate the modified civil law rule. Development proposals that violate the modified civil law rule will not be approved unless the owner/developer obtains approvals and/or easements from the affected property owner(s).

3.3.2 Master Planning

The county requires that new developments comply with adopted regional drainage master plans.

As set forth in Section 3.2.1, drainage planning is required for all new developments. In recognition that drainage boundaries are non-jurisdictional, the County participates in the preparation of regional basin-wide master plans. These plans define major drainage facilities, including those that are required public improvements for new developments.

3.3.3 Drainage Problem Areas

The county requires offsite analysis and drainage facilities for development in a drainage problem area. A drainage problem area is an area where there is no downstream outfall to a street, roadside ditch, open channel or storm sewer that meets the relevant requirements in these CRITERIA. The offsite analysis will address downstream conditions at every point along the project site boundaries where storm-water runoff will exit the property.

The county allows stormwater retention in drainage problem areas only if there is no other viable option, in the opinion of Planning and Zoning, available to resolve the drainage impact from the development. Stormwater retention facilities must be designed to meet these CRITERIA (storage).

There are areas within the County where significant drainage problems exist. Any new development in those areas may compound the existing drainage problems. Depending on specific details of the drainage problem, the following techniques for reducing or eliminating negative impacts have been used successfully:

- Over-detention with reduced release rates
- Downstream improvements to the drainage system
- Reduction of impervious area
- Infiltration water quality BMPs
- Stormwater retention

3.3.4 Public Improvements

The county requires the construction of improvements to the local drainage system and the major drainageway as defined by the approved Phase III Drainage Report and plan for all development.

Public improvements associated with drainage may include improvements to both the local drainage system and the major drainageway. The local drainage system consists of curb and gutter, inlets and storm sewers, culverts, bridges, swales, ditches, channels, detention/re-tention areas and other drainage facilities required to convey the minor and major storm runoff to the major drainageway. The major drainageway system consists of channels, storm sewers, bridges, detention/retention areas and other facilities serving more than the development or property in question, that may be impacted by the development.

3.3.5 Basin Transfer

The county does not allow the inter-basin transfer of storm drainage runoff and to maintain the historic drainage path within the drainage basin. The transfer of drainage from basin to basin is a viable alternative only in certain instances and will be reviewed on a case-by-case basis. When basin transfer is permitted, the plan must achieve historic flow conditions at the confluence of the basins and meet the requirements of post development flow conditions.

Colorado drainage law recognizes the inequity of transferring the burden on managing storm drainage from one location or property to another. Liability questions also arise when the historic drainage continuum is altered. The diversion of storm runoff from one basin to another should be avoided unless specific and prudent reasons justify and dictate such a transfer. Prior to selecting a solution, alternatives should be reviewed. Planning and design of stormwater drainage systems should not be based on the premise that problems can be transferred from one location to another.

3.3.6 Stormwater Runoff Detention

The county requires that stormwater detention and/or retention be provided for all developments except as described below. The required minimum volume and maximum release rates will be determined in accordance with the requirements of these CRITERIA. Detention/retention volumes may be reduced with the incorporation of impervious area reduction methods identified in the stormwater quality section. Regional detention and/or retention ponds may be used in satisfying storage requirements only if it can be demonstrated that the pond(s) has adequate storage capacity and that the pond(s) has been designed and constructed in accordance with the requirements of these CRITERIA.

When an application is under the threshold to require stormwater detention, Planning and Zoning will accept an Abridged Drainage Report or Drainage Letter in lieu of a Phase III Drainage Report. The thresholds are as follows:

1. For single family residential development with lot sizes less than 2.5 acres, cumulative impervious areas including the structures, streets/roads/driveways (paved or unpaved) and parking areas, will not total more than 10,000 square feet. The development proposal will restrict the allowable impervious area at the time of building permit issuance so that the maximum impervious area established is not exceeded.

2. For other residential development, with lot sizes greater than 2.5 acres, cumulative impervious areas including the structures, streets/roads/driveways (paved or unpaved) and parking areas, will not total more than 20,000 square feet. The development proposal should restrict the allowable impervious area at the time of building permit issuance so that the maximum impervious area established is not exceeded.

3. For residential lots adjacent to or abutting a drainageway, detention is not required if it can be proven to have no adverse effect to downstream property owners and have sufficient capacity to handle the additional flows. At a minimum, water quality shall be addressed in accordance with this regulation.

4. For all other development with lot sizes less than 2.5 acres, cumulative impervious areas including the structures, streets/roads/driveways (paved or unpaved) and parking areas, will not total more than 10,000 square feet. The development proposal will restrict the allowable impervious area at the time of building permit issuance so that the maximum impervious area established is not exceeded.

5. For existing Roadway projects where improvements are limited due to vacant land.

6. For all Trail projects.

If the proposal is meeting these thresholds, the applicant must submit an Abridged Drainage Report or Drainage Letter as identified in Sections 2.5 and 2.6 of these CRITERIA. The Abridged Drainage Report must address water quality as specified in the Stormwater Quality section below.

3.3.7 Stormwater Quality

The county requires BMPs to reduce stormwater quality pollution caused by development, unless it meets the criteria as noted in the procedure below. Regional water quality facilities may be used in satisfying the BMP requirements only if it can be demonstrated that the facility provides the required water quality capture volume and that the facility has been designed and constructed in accordance with the requirements of these CRITERIA.

Land development and human activities affect both the quantity and the quality of stormwater discharged to receiving waters. Development increases the volume of stormwater and the pollutants leaving the project property. To remove pollutants, the collection and conveyance infrastructure must be supplemented with collection and infiltration BMPs. The increase in impermeable areas such as rooftops, parking lots and paved areas decreases the opportunity for stormwater to infiltrate and percolate into the ground, and the absence of vegetation allows for increased flow velocity and sediment erosion.

To mitigate the negative effects of land development on stormwater quality, stormwater quality improvement BMPs are required. Refer to the *Manual* for BMPs and design specifications.

A project shall not be required to provide a Step 1 and/or Step 2 BMP per the Stormwater Quality Management Chapter of this CRITERIA if the following are met:

1. Detention and/or retention is not required per Section 3.3.6.

2. The project disturbs less than one acre of ground or 1 acre per mile for linear projects.

3. The project is not part of a larger common plan of development or sale.

A common plan of development or sale is a site where multiple separate and distinct construction activities may be taking place at different times on different schedules, but still under a single plan. Examples include:

1. Phased projects and projects with multiple filings or lots, even if the separate phases or filings/lots will be constructed under separate contracts or by separate owners (e.g., a development where lots are sold to separate builders).

2. A development plan that may be phased over multiple years but is still under a consistent plan for long-term development.

3. Projects in a contiguous area, up to 1/4 mile, that may be unrelated but still under the same contract, such as construction of a building extension and a new parking lot at the same facility.

Requests for relief of permanent water quality control measures for projects within the Jefferson County MS4 area will not be considered for projects that include land disturbance of one acre or greater except as listed below as an exclusion.

MS4 Exclusion Procedure:

Planning and Zoning may grant an administrative exclusion of the requirement for permanent water quality control measures associated with projects if one of the following apply:

(A) “Pavement Management Sites”: Sites, or portions of sites, for the rehabilitation, maintenance, and reconstruction of roadway pavement, which includes roadway resurfacing, mill and overlay, white topping, black topping, curb and gutter replacement, concrete panel replacement, and pothole repair. The purpose of the site must be to provide additional years of service life and optimize service and safety. The site also must be limited to the repair and replacement of pavement in a manner that does not result in an increased impervious area and the infrastructure must not substantially change. The types of sites covered under this exclusion include day-to-day maintenance activities, rehabilitation, and reconstruction of pavement. “Roadways” include roads and bridges that are improved, designed or ordinarily used for vehicular travel and contiguous areas improved, designed or ordinarily used for pedestrian or bicycle traffic, drainage for the roadway, and/or parking along the roadway. Areas primarily used for parking or access to parking are not roadways.

(B) Excluded Roadway Redevelopment: Redevelopment sites for existing roadways, when one of the following criteria is met:

1) The site adds less than 1 acre of paved area per mile of roadway to an existing roadway, or

2) The site does not add more than 8.25 feet of paved width at any location to the existing roadway.

(C) Excluded Existing Roadway Areas: For redevelopment sites for existing roadways, only the area of the existing roadway is excluded from the requirements of an applicable development site when the site does not increase the width by two times or more, on average, of the original roadway area. The entire site is not excluded from being considered an applicable development site for this exclusion. The area of the site that is part of the added new roadway area is still an applicable development site.

(D) Aboveground and Underground Utilities: Activities for installation or maintenance of underground utilities or infrastructure that does not permanently alter the terrain, ground cover, or drainage patterns from those present prior to the construction activity. This exclusion includes, but is not limited to, activities to install, replace, or maintain utilities under roadways or other paved areas that return the surface to the same condition.

(E) Non-Residential and Non-Commercial Infiltration Conditions: This exclusion does not apply to residential or commercial sites for buildings. This exclusion applies to applicable development sites for which post-development surface conditions do not result in concentrated stormwater flow during the 80th percentile stormwater runoff event. In addition, post-development surface conditions must not be projected to result in a surface water discharge from the 80th percentile stormwater runoff events. Specifically, the 80th percentile event must be infiltrated and not discharged as concentrated flow. For this exclusion to apply, a study specific to the site, watershed and/or MS4 must be conducted. The study must show rainfall and soil conditions present within the permitted area; must include allowable slopes, surface conditions, and ratios of impervious area to pervious area; and the permittee must accept such study as applicable within its MS4 boundaries.

(F) Sites with Land Disturbance to Undeveloped Land that will Remain Undeveloped: Jefferson County may exclude sites with land disturbance to undeveloped land (land with no human-made structures such as buildings or pavement) that will remain undeveloped.

(G) Stream Stabilization Sites: Jefferson County may exclude stream stabilization sites.

(H) Trails: Jefferson County may exclude bike and pedestrian trails. Bike lanes for roadways are not included in this exclusion, unless attached to a roadway that qualifies under another exclusion in this section.

3.3.8 Floodplain Management

The county requires developments that impact floodplains to comply with the floodplain regulations of the ZR and LDR.

Although in many circumstances it may be desirable to leave the floodplain in its natural state, it is evident that development in areas encumbered by floodplains often results in alterations within the floodplain limits. The County has adopted floodplain regulations as part of its ZR and the *LDR*. These regulations should be referenced when alterations within floodplains are proposed.

3.3.9 Operations and Maintenance

The county requires that maintenance access be provided to all storm drainage facilities to assure continuous operational capability of the system. The property owner is responsible for the maintenance of all drainage facilities including inlets, pipes, culverts, channels, ditches, hydraulic structures and detention basins located on their land unless modified by the development improvements agreement. Should the owner fail to adequately maintain said facilities, the county will have the right to enter said land for the purposes of operations and maintenance. All such maintenance costs will be assessed to the property owner. Where floodplains or major drainageway improvements, are in whole or in part within the MHFD boundary, the approval by MHFD is required to assure MHFD maintenance eligibility.

An important part of all storm drainage facilities is the continued maintenance of the facilities to ensure they will function as designed. Maintenance responsibility lies with the owner of the land, except as modified by specific agreement. Maintenance responsibility will be delineated on Plats and Final Development Plans. Maintenance access for detention ponds must be adequate for maintenance and be shown on the Plats and Final Development Plans.

3.3.10 Drainage Easement Requirements

Drainage easements are required for all onsite drainage facilities and for offsite drainage facilities in accordance with Section 3.3.1. All drainage easements must be dedicated to Jefferson County in a form acceptable to the County Attorney's office and must be shown on plats and/or final development plans. The county has the right to access drainage easements, and the right, but not the obligation, of construction and/or maintenance within drainage easements. Drainage easements will be kept clear of obstructions by the property owner/homeowners association/owners association or equivalent entity to the flow and/or obstructions to maintenance access.

The easement requirements are indicated on the following table.

	Drainage Facility	Drainage Easement Width
1.	Storm Sewer/Subsurface Groundwater Collection System Mains /Interceptor	
	(a) Underdrains less than 36" dia.	20'
	(b) Underdrains equal to or greater than 36" dia.	Twice the pipe invert depth with sewer placed within the middle third of the easement (minimum width = 20')
2.	Open Channel/Swales	
	(a) Q_{100} less than 1 cfs	5' minimum
	(b) Q_{100} greater than or equal to 1 cfs and/or less than or equal to 20 cfs	15' minimum
	(c) Q100 greater than 20 cfs	15' minimum (must accommodate Q_{100} plus one foot of freeboard and required access)
3.	Detention/Retention/Water Quality Ponds/MPLDs/water quality features	As required to contain storage or encompass the water quality feature and associated facilities plus adequate maintenance access to the pond or feature and around perimeter.
4.	Along Side Lot Lines for Single-family Residential Subdivisions as required.	5' minimum, centered on the lot line.

3.3.11 Storage Facilities

The policy of the county is to:

1. Restrict development to areas outside of the reservoir's high-water line created by the design flood for the emergency spillway.

2. Restrict development to areas outside of the high-water line created by the breach of a dam (excepting existing Class 1 classified dams). If the development proposal is to improve the existing dam to a Class 1 classification, plans must be approved by the reservoir owner and dam safety branch of the Colorado Division of Water Resources. The improvements to the dam must be completed, inspected

and approved prior to any building permit within the boundary of the plat. All construction plans required to improve a dam to a class 1, as indicated above, is the responsibility of the developer

3. Require developments downstream of a Class 2 dam to have the dam safety branch of the Colorado Division of Water Resources determine if the proposed development is within the high-water line created by the breach of dam. For developments downstream of a Class 3 or Class 4 dam, a breach of dam study may be required to determine the limits of the breach of dam if the dam safety branch of the Colorado Division of Water Resources does not have the information available. The dam safety branch of the Colorado Division of Water Resources must approve the required study.

4. Restrict development to areas outside emergency spillway paths, beginning at the dam and proceeding to the point where the flood water returns to the natural drainage course.

The problem of dam safety and the related hazard of the emergency spillways has been brought to the attention of the public by nationwide dam failures, and is the subject of a National Dam Safety Program by the federal government. Jurisdictional dams are classified by the State Engineer as high, moderate, low or Class 1 to Class 4 structures depending on conditions downstream. Dams are classified as high hazard or Class 1 structures when, in the event of failure, there is a potential loss of life. Dams presently rated as low to moderate or Class 2 to Class 4 hazard structures may be changed to higher hazard rating if development occurs within the potential path of flooding due to a dam breach. In this case, the reservoir owners would be liable for the cost of upgrading the structure to meet the higher hazard classification.

3.3.12 Inadvertent Detention Storage

The county does not assume any reduction in peak flows for inadvertent stormwater storage created by embankments with undersized culverts when calculating downstream flows, unless such detention is covered by agreement with the county and is designed and constructed in accordance with these CRITERIA.

The county does not assume any reduction in peak flows for inadvertent stormwater storage due to privately owned non-flood-control reservoirs. For publicly owned water storage reservoirs, with the approval of the owner, only detention storage above the spillway crest can be used in the calculation of downstream flows.

3.3.13 Irrigation Facilities

The policies of the county are as follows:

1. To require development to direct storm runoff into historic and natural drainageways and avoid discharging into irrigation ditches, unless the discharge is approved by the ditch company or equivalent entity.

2. Whenever development will alter patterns of the storm drainage into irrigation ditches by increasing flow rates, volumes or changing points of concentration, the written consent from the ditch company or equivalent entity is required.

3. The discharge of runoff into the irrigation ditch will be approved only if such discharge is consistent with an adopted master drainage plan and is in the best interest of the county.

4. Whenever irrigation ditches cross major drainageways within the developing area, the developer is required to design and construct the appropriate structures to separate storm runoff from ditch flows subject to the condition noted in Policy 3 above.

5. Whenever physical modifications and/or relocation of irrigation ditches are proposed in conjunction with development, written consent from the ditch company or equivalent entity will be submitted. Relocated irrigation ditches will not be placed in public Rights-of-Way except for crossings of public Right-of-Way that are at right angles or as close to right angles as possible.

6. If storm water is carried within an irrigation ditch, a drainage easement will be dedicated to the county and will meet the easement width set forth in Section 3.3.10 of these CRITERIA. An irrigation ditch easement will be dedicated within the development boundary at the discretion of the ditch company or equivalent entity. The irrigation ditch easement agreement will address the relinquishment of any irrigation ditches that will be abandoned within the development boundary.

7. If an irrigation ditch is abandoned or terminated by the ditch company or equivalent entity, said ditch is deemed to be a natural drainageway. Modifications or alterations to the abandoned or terminated ditch are only allowed subject to approval by Jefferson County in accordance to these CRITERIA.

8. To assume that an irrigation ditch does not intercept the storm runoff from the upper basin and that the upper basin is tributary to the basin area downstream of the ditch. The physical aspects of a bermed irrigation ditch structure within a development will be analyzed to

determine any drainage impacts of new development.

There are many irrigation ditches and reservoirs in the county area. The ditches and reservoirs have historically intercepted the storm runoff from the rural and agricultural type basins, generally without major problems. With urbanization of the basins, however, the storm runoff has increased in rate, quantity and frequency, as well as changes in water quality. The irrigation facilities can no longer be utilized indiscriminately as drainage facilities and, therefore, policies have been established to achieve compatibility between urbanization and the irrigation facilities.

In evaluating the interaction of irrigation ditches with a major drainageway for the purpose of basin delineation, the ditch should not be utilized as a basin boundary due to the limiting flow capacity of the ditch. The ditches will generally be flowing full or near full during major storms; therefore, the tributary basin runoff would flow across the ditch.

Irrigation ditches are designed with flat slopes and limited carrying capacity, which decreases in the downstream direction. As a general rule, irrigation ditches cannot be used as an outfall point for the storm drainage system because of these physical limitations. In addition, certain ditches are abandoned after urbanization and could not be successfully utilized for storm drainage.

In certain instances, irrigation ditches have been successfully utilized as outfall points for the initial drainage system, but only after a thorough hydrological and hydraulic analysis. Since the owner's liability from ditch failure increases with the acceptance of storm runoff, the responsibility must be clearly defined before a combined system is approved.

3.4 Planning and Design

3.4.1 Minor and Major Drainage System

The county requires that all development include the planning, designing and implementation for both the minor and major drainage systems.

The county requires that all minor drainage systems be sized without accounting for peak flow reductions from on-site detention, unless otherwise approved by Planning and Zoning.

Every urban area has two separate and distinct drainage systems, whether or not they are actually planned or designed. One is the Minor Drainage System and the other is the Major Drainage System, which are combined to form the Total Drainage System.

The Major Drainage System is designed to convey runoff from the 100-year recurrence interval flood to minimize health and life hazards, damage to structures and interruption to traffic and services. Major storm flows can be carried in the urban street system (within acceptable depth criteria), channels, storm sewers and other facilities.

The Minor Drainage System is designed to transport the runoff from five-year frequency events with a minimum disruption to the urban environment. Minor storm drainage can be conveyed in the curb and gutter area of the street or street/roadside ditch (subject to street classification and capacity) by storm sewer, channel or other conveyance facility.

3.4.2 Storm Runoff

The county allows storm runoff to be determined by either the Rational method or the Colorado Urban Hydrograph Procedure (CUHP), within the limitations as set forth in these CRITERIA. For basins larger than 160 acres, the peak flows and volumes will be determined by CUHP.

3.4.3 Streets

The county allows the use of streets for drainage within certain limitations as defined in these CRITERIA.

Streets are an integral part of the urban drainage system and may be used for transporting storm runoff up to design limits. The engineer should recognize that the primary purpose of streets is for traffic, and therefore the use of streets for storm runoff must be restricted.

3.4.4 Floodproofing Existing Structures

The county encourages the floodproofing of existing structures not in conformance with the adopted floodplain regulations by utilizing the criteria presented in the "Homeowners Guide to Retrofitting, FEMA".

Floodproofing can be defined as those measures which reduce the potential for flood damages to existing properties within a floodplain. The floodproofing measures can range from elevating structures to intentional flooding of noncritical building spaces to minimize structural

damages. Floodproofing measures are only a small part of good floodplain management which encourages wise floodplain development to minimize the adverse effects of floods.

Chapter 4 - Floodplain Regulations

As set forth in the Floodplain Overlay District of the ZR and the *LDR*, the regulation of floodplains is necessary to preserve and promote the general health, welfare and economic well-being of the region.

Chapter 5 - Rainfall

5.1 Introduction

Presented in this section are the design rainfall data to be used with the CUHP and the Rational Method. All hydrological analysis within the jurisdiction of these *CRITERIA* will utilize the rainfall data presented herein for calculating storm runoff.

The design storms and time intensity frequency curves for the County were developed using the rainfall data and procedures presented in the *Manual* and are presented herein for convenience.

5.2 Jefferson County Rainfall Zones

5.2.1 Description of the Zones

A review of the isopluvial maps presented in the NOAA Atlas 14 for Colorado shows that Jefferson County can be divided into four rainfall zones. Within each zone, the precipitation values for various return periods and duration storms up to 0.4 inch within a small area of the County. These zones are delineated on Figure-501 and are discussed below:

Zone 1: Covers the area from the east Jefferson County line to the 6000-foot contour at the foothills boundary. The point rainfall values in this zone vary less than 0.4 inch for return periods from 2-year to 100-year and for storm durations from 1 hour to 6 hours.

Zone IIA: Covers the area from the 6000-foot contour to the 7500-foot contour and generally represents the foothills of the front range. The point rainfall values in this zone decrease from east to west by less than 0.3 inch for the storm durations and return periods noted.

Zone IIB: Covers the area from the 7500-foot contour to a line defined by the South Platte drainage basin tributary to the town of South Platte. The point rainfall values in this zone decrease from east to west by less than 0.4 inch.

Zone III: Covers the area tributary to the South Platte River at the town of South Platte and is bounded on the south and west by the County lines. The point rainfall values in this zone vary by less than 0.4 inch.

5.2.2 Selecting the Rainfall Zone

Since some of the drainage basins will include areas from more than one zone, the following criteria will be used to select the design rainfall and intensity date. Basin area refers to the actual basin or sub-basin for which storm runoff information is being calculated and not necessarily the entire watershed area.

a. If 50 percent or more of the basin area lies in a given zone, the data for that zone will be used.

b. For those basins within three rainfall zones, the zone data with the largest basin area will be used.

5.3 Colorado Urban Hydrograph Procedure Design Storms

For drainage basins less than five square miles, a two-hour storm distribution without area adjustment of the point rainfall values will be used for the CUHP. For drainage basins between five and ten square miles, a two-hour storm distribution is used but the incremental rainfall values are adjusted for the large basin area in accordance with suggested procedures in the NOAA Atlas 14 for Colorado. The adjustment is an attempt to relate the average of all point values for a given duration and frequency within a basin to the average depth over the basin for the same duration and frequency. For drainage basins between ten and twenty square miles, a three-hour storm duration with adjustment for area will be used. The distribution for the last hour was obtained by uniformly distributing the difference between the two and three-hour point rainfall values. The adjustment for area was obtained from the NOAA Atlas for Colorado. The incremental rainfall distributions for all basin areas up to 20 square miles are presented in Table 502A through Table 502D.

5.4 Time-Intensity-Frequency Curves

The Time-Intensity-Frequency curves for each zone were developed by distributing the one-hour point rainfall values (Table 501) using the factors obtained from the NOAA Atlas 14 presented below:

Factors for Durations of Less Than One Hour

Duration (minutes)	5	10	15	30
Ratio to one-hour depth	0.29	0.45	0.57	0.79

Source: NOAA Atlas 2, Volume III, Colorado 1973

The point values were then converted to intensities and plotted on Figure 502. The data are also presented in Table 503.

Table 501
Design Point Rainfall Values

One-Hour Point Rainfall (In.)					
County Zone	2-Year	5-Year	10-Year	50-Year	100-Year
Jefferson I	1.02	1.42	1.68	2.32	2.66
Jefferson IIA	0.95	1.33	1.57	2.17	2.48
Jefferson IIB	0.85	1.19	1.39	1.93	2.20
Jefferson III	0.73	1.06	1.26	1.79	2.06

Table 502A
CUHP Design Storm for Zone I - Incremental Rainfall Depth/Return Period

	Basins Less Than 5 Sq. Miles					Basins Between 5 and 10 Sq. Miles					Basins Between 10 and 20 Sq. Miles				
Time*	2-Yr**	5-Yr**	10-Yr**	50-Yr**	100-Yr**	2-Yr**	5-Yr**	10-Yr**	50-Yr**	100-Yr**	2-Yr**	5-Yr**	10-Yr**	50-Yr**	100-Yr**
5	0.02	0.03	0.03	0.03	0.03	0.02	0.03	0.03	0.03	0.03	0.02	0.03	0.03	0.03	0.03
10	0.04	0.05	0.06	0.08	0.08	0.04	0.05	0.06	0.08	0.08	0.04	0.05	0.06	0.08	0.08
15	0.09	0.12	0.14	0.12	0.12	0.09	0.12	0.14	0.12	0.12	0.09	0.12	0.14	0.12	0.12
20	0.16	0.22	0.25	0.19	0.21	0.16	0.21	0.24	0.19	0.21	0.15	0.20	0.23	0.19	0.21
25	0.26	0.36	0.42	0.35	0.37	0.24	0.35	0.40	0.34	0.36	0.23	0.32	0.38	0.32	0.33
30	0.14	0.18	0.20	0.58	0.67	0.14	0.17	0.19	0.56	0.64	0.13	0.16	0.18	0.52	0.60
35	0.06	0.08	0.09	0.28	0.37	0.06	0.08	0.09	0.24	0.36	0.06	0.08	0.09	0.25	0.33
40	0.05	0.06	0.07	0.19	0.21	0.05	0.06	0.07	0.19	0.21	0.05	0.06	0.07	0.19	0.21
45	0.03	0.05	0.06	0.12	0.16	0.03	0.05	0.06	0.12	0.16	0.03	0.05	0.06	0.12	0.16
50	0.03	0.05	0.05	0.12	0.13	0.03	0.05	0.05	0.12	0.13	0.03	0.05	0.05	0.12	0.13
55	0.03	0.04	0.05	0.07	0.11	0.03	0.04	0.05	0.07	0.11	0.03	0.04	0.05	0.07	0.11
60	0.03	0.04	0.05	0.07	0.11	0.03	0.04	0.05	0.07	0.11	0.03	0.04	0.05	0.07	0.11
65	0.03	0.04	0.05	0.07	0.11	0.03	0.04	0.05	0.07	0.11	0.03	0.04	0.05	0.07	0.11
70	0.02	0.04	0.05	0.06	0.05	0.02	0.04	0.05	0.06	0.05	0.02	0.04	0.05	0.06	0.05
75	0.02	0.03	0.05	0.06	0.05	0.02	0.03	0.05	0.06	0.05	0.02	0.03	0.05	0.06	0.05
80	0.02	0.03	0.04	0.04	0.03	0.02	0.03	0.04	0.04	0.03	0.02	0.03	0.04	0.04	0.03
85	0.02	0.03	0.03	0.04	0.03	0.02	0.03	0.03	0.04	0.03	0.02	0.03	0.03	0.04	0.03
90	0.02	0.03	0.03	0.03	0.03	0.02	0.03	0.03	0.03	0.03	0.02	0.03	0.03	0.03	0.03
95	0.02	0.03	0.03	0.03	0.03	0.02	0.03	0.03	0.03	0.03	0.02	0.03	0.03	0.03	0.03
100	0.02	0.02	0.03	0.03	0.03	0.02	0.02	0.03	0.03	0.03	0.02	0.02	0.03	0.03	0.03
105	0.02	0.02	0.03	0.03	0.03	0.02	0.02	0.03	0.03	0.03	0.02	0.02	0.03	0.03	0.03
110	0.02	0.02	0.03	0.03	0.03	0.02	0.02	0.03	0.03	0.03	0.02	0.02	0.03	0.03	0.03
115	0.01	0.02	0.03	0.03	0.03	0.01	0.02	0.03	0.03	0.03	0.02	0.02	0.03	0.03	0.03
120	0.01	0.02	0.02	0.03	0.03	0.01	0.02	0.02	0.03	0.03	0.01	0.02	0.02	0.03	0.03
125											0.01	0.02	0.02	0.03	0.03
130											0.01	0.02	0.02	0.03	0.03
135											0.01	0.02	0.02	0.03	0.03
140											0.01	0.02	0.02	0.02	0.03
145											0.01	0.01	0.02	0.02	0.03
150											0.01	0.01	0.01	0.02	0.02
155											0.01	0.01	0.01	0.02	0.02
160											0.01	0.01	0.01	0.02	0.02
165											0.01	0.01	0.01	0.01	0.02
170											0.01	0.01	0.01	0.01	0.01
175											0.01	0.01	0.01	0.01	0.01
180											0.01	0.01	0.01	0.01	0.01
Total	1.17	1.61	1.89	2.68	3.05	1.15	1.58	1.85	2.61	3.00	1.25	1.69	1.98	2.79	3.16

* *Time in minutes*

** *Rainfall in inches*

Table 502B

CUHP Design Storm for Zone IIA - Incremental Rainfall Depth/Return Period

	Basins Less Than 5 Sq. Miles					Basins Between 5 and 10 Sq. Miles					Basins Between 10 and 20 Sq. Miles				
Time*	2-Yr**	5-Yr**	10-Yr**	50-Yr**	100-Yr**	2-Yr**	5-Yr**	10-Yr**	50-Yr**	100-Yr**	2-Yr**	5-Yr**	10-Yr**	50-Yr**	100-Yr**
5	0.02	0.03	0.03	0.03	0.02	0.02	0.03	0.03	0.03	0.02	0.02	0.03	0.03	0.03	0.02
10	0.04	0.05	0.06	0.08	0.07	0.04	0.05	0.06	0.08	0.07	0.04	0.05	0.06	0.08	0.07
15	0.08	0.12	0.13	0.11	0.11	0.08	0.12	0.13	0.11	0.11	0.08	0.12	0.13	0.11	0.11
20	0.15	0.20	0.24	0.17	0.20	0.14	0.20	0.23	0.17	0.20	0.14	0.18	0.21	0.17	0.20
25	0.24	0.33	0.39	0.33	0.35	0.23	0.32	0.38	0.31	0.33	0.22	0.30	0.35	0.29	0.32
30	0.13	0.17	0.19	0.54	0.62	0.12	0.17	0.18	0.52	0.60	0.12	0.15	0.17	0.49	0.56
35	0.06	0.08	0.09	0.26	0.35	0.06	0.08	0.09	0.25	0.33	0.06	0.08	0.09	0.23	0.31
40	0.05	0.06	0.07	0.17	0.20	0.05	0.06	0.07	0.17	0.20	0.05	0.06	0.07	0.17	0.20
45	0.03	0.05	0.06	0.11	0.15	0.03	0.05	0.06	0.11	0.15	0.03	0.05	0.06	0.11	0.15
50	0.03	0.05	0.05	0.11	0.12	0.03	0.05	0.05	0.11	0.12	0.03	0.05	0.05	0.11	0.12
55	0.03	0.04	0.05	0.07	0.10	0.03	0.04	0.05	0.07	0.10	0.03	0.04	0.05	0.07	0.10
60	0.03	0.04	0.05	0.07	0.10	0.03	0.04	0.05	0.07	0.10	0.03	0.04	0.05	0.07	0.10
65	0.03	0.04	0.05	0.07	0.10	0.03	0.04	0.05	0.07	0.10	0.02	0.04	0.05	0.07	0.10
70	0.02	0.04	0.05	0.05	0.05	0.02	0.04	0.05	0.05	0.05	0.02	0.04	0.05	0.05	0.05
75	0.02	0.03	0.05	0.05	0.05	0.02	0.03	0.05	0.05	0.05	0.02	0.03	0.05	0.05	0.05
80	0.02	0.03	0.04	0.04	0.03	0.02	0.03	0.04	0.04	0.03	0.02	0.03	0.04	0.04	0.03
85	0.02	0.03	0.03	0.04	0.03	0.02	0.03	0.03	0.04	0.03	0.02	0.03	0.03	0.04	0.03
90	0.02	0.03	0.03	0.03	0.03	0.02	0.03	0.03	0.03	0.03	0.02	0.03	0.03	0.03	0.03
95	0.02	0.03	0.03	0.03	0.03	0.02	0.03	0.03	0.03	0.03	0.02	0.03	0.03	0.03	0.03
100	0.02	0.02	0.03	0.03	0.03	0.02	0.02	0.03	0.03	0.03	0.02	0.02	0.03	0.03	0.03
105	0.02	0.02	0.03	0.03	0.03	0.02	0.02	0.03	0.03	0.03	0.02	0.02	0.03	0.03	0.03
110	0.02	0.02	0.03	0.03	0.03	0.02	0.02	0.03	0.03	0.03	0.02	0.02	0.03	0.03	0.03
115	0.01	0.02	0.03	0.03	0.03	0.01	0.02	0.03	0.03	0.03	0.02	0.02	0.03	0.03	0.03
120	0.01	0.02	0.02	0.03	0.03	0.01	0.02	0.02	0.03	0.03	0.01	0.02	0.02	0.03	0.03
125											0.01	0.02	0.02	0.02	0.02
130											0.01	0.01	0.02	0.02	0.02
135											0.01	0.01	0.01	0.02	0.02
140											0.01	0.01	0.01	0.02	0.02
145											0.01	0.01	0.01	0.02	0.02
150											0.01	0.01	0.01	0.02	0.02
155											0.01	0.01	0.01	0.01	0.02
160											0.01	0.01	0.01	0.01	0.02
165											0.00	0.01	0.01	0.01	0.01
170											0.00	0.01	0.01	0.01	0.01
175											0.00	0.00	0.01	0.01	0.01
180											0.00	0.01	0.00	0.01	0.01
Total	1.12	1.55	1.83	2.516	2.86	1.09	1.54	1.80	2.46	2.80	1.15	1.59	1.87	2.57	2.93

* *Time in minutes*

** Rainfall in inches

Table 502C

CUHP Design Storm for Zone IIB - Incremental Rainfall Depth/Return Period

	Basins Less Than 5 Sq. Miles					Basins Between 5 and 10 Sq. Miles					Basins Between 10 and 20 Sq. Miles				
Time*	2-Yr**	5-Yr**	10-Yr**	50-Yr**	100-Yr**	2-Yr**	5-Yr**	10-Yr**	50-Yr**	100-Yr**	2-Yr**	5-Yr**	10-Yr**	50-Yr**	100-Yr**
5	0.02	0.02	0.03	0.03	0.03	0.02	0.02	0.03	0.03	0.03	0.02	0.02	0.03	0.03	0.03
10	0.03	0.04	0.05	0.07	0.07	0.03	0.04	0.05	0.08	0.07	0.03	0.04	0.05	0.07	0.07
15	0.07	0.10	0.11	0.10	0.10	0.07	0.10	0.11	0.12	0.10	0.07	0.10	0.11	0.10	0.10
20	0.14	0.18	0.21	0.15	0.18	0.13	0.17	0.20	0.19	0.18	0.12	0.16	0.19	0.15	0.18
25	0.21	0.30	0.35	0.28	0.31	0.20	0.29	0.33	0.34	0.30	0.19	0.27	0.31	0.26	0.28
30	0.12	0.15	0.17	0.46	0.55	0.11	0.15	0.16	0.56	0.53	0.11	0.14	0.15	0.43	0.50
35	0.05	0.07	0.08	0.22	0.31	0.05	0.07	0.08	0.24	0.30	0.05	0.07	0.08	0.21	0.28
40	0.04	0.05	0.06	0.15	0.18	0.04	0.05	0.06	0.19	0.18	0.04	0.05	0.06	0.15	0.18
45	0.03	0.04	0.05	0.10	0.14	0.03	0.04	0.05	0.12	0.14	0.03	0.04	0.05	0.10	0.14
50	0.03	0.04	0.04	0.10	0.11	0.03	0.04	0.04	0.12	0.11	0.03	0.04	0.04	0.10	0.11
55	0.03	0.04	0.04	0.06	0.09	0.03	0.04	0.04	0.07	0.09	0.03	0.04	0.04	0.06	0.09
60	0.03	0.04	0.04	0.06	0.09	0.03	0.04	0.04	0.07	0.09	0.03	0.04	0.04	0.06	0.09

65	0.03	0.04	0.04	0.06	0.09	0.03	0.04	0.04	0.07	0.09	0.03	0.04	0.04	0.06	0.09
70	0.02	0.04	0.04	0.05	0.04	0.02	0.04	0.04	0.06	0.04	0.02	0.04	0.04	0.05	0.04
75	0.02	0.03	0.04	0.05	0.04	0.02	0.03	0.04	0.06	0.04	0.02	0.03	0.04	0.05	0.04
80	0.02	0.03	0.03	0.03	0.03	0.02	0.03	0.03	0.04	0.03	0.02	0.03	0.03	0.03	0.03
85	0.02	0.03	0.03	0.03	0.03	0.02	0.03	0.03	0.04	0.03	0.02	0.03	0.03	0.03	0.03
90	0.02	0.03	0.03	0.03	0.03	0.02	0.03	0.03	0.03	0.03	0.02	0.03	0.03	0.03	0.03
95	0.02	0.03	0.03	0.03	0.03	0.02	0.03	0.03	0.03	0.03	0.02	0.03	0.03	0.03	0.03
100	0.02	0.02	0.03	0.03	0.03	0.02	0.02	0.03	0.03	0.03	0.02	0.02	0.03	0.03	0.03
105	0.02	0.02	0.03	0.03	0.03	0.02	0.02	0.03	0.03	0.03	0.02	0.02	0.03	0.03	0.03
110	0.02	0.02	0.03	0.03	0.03	0.02	0.02	0.03	0.03	0.03	0.02	0.02	0.03	0.03	0.03
115	0.01	0.02	0.02	0.03	0.03	0.01	0.02	0.02	0.03	0.03	0.01	0.02	0.02	0.03	0.03
120	0.01	0.02	0.02	0.03	0.03	0.01	0.02	0.02	0.03	0.03	0.01	0.02	0.02	0.03	0.03
125											0.01	0.01	0.02	0.02	0.02
130											0.01	0.01	0.02	0.02	0.02
135											0.01	0.01	0.02	0.02	0.02
140											0.01	0.01	0.01	0.02	0.02
145											0.01	0.01	0.01	0.01	0.02
150											0.01	0.01	0.01	0.01	0.01
155											0.01	0.01	0.01	0.01	0.01
160											0.00	0.01	0.01	0.01	0.01
165											0.00	0.01	0.01	0.01	0.01
170											0.00	0.00	0.01	0.01	0.01
175											0.00	0.00	0.01	0.01	0.01
180											0.00	0.00	0.01	0.01	0.01
Total	1.03	1.40	1.60	2.21	2.60	1.00	1.38	1.56	2.61	2.56	1.05	1.43	1.67	2.31	2.66

* *Time in minutes*

** Rainfall in inches

Table 502D

CUHP Design Storm for Zone III - Incremental Rainfall Depth/Return Period

	Basins Less Than 5 Sq. Miles					Basins Between 5 and 10 Sq. Miles					Basins Between 10 and 20 Sq. Miles				
Time*	2-Yr**	5-Yr**	10-Yr**	50-Yr**	100-Yr**	2-Yr**	5-Yr**	10-Yr**	50-Yr**	100-Yr**	2-Yr**	5-Yr**	10-Yr**	50-Yr**	100-Yr**
5	0.01	0.02	0.03	0.02	0.02	0.01	0.02	0.03	0.02	0.02	0.01	0.02	0.03	0.02	0.02
10	0.03	0.04	0.05	0.06	0.06	0.03	0.04	0.05	0.06	0.06	0.03	0.04	0.05	0.06	0.06
15	0.06	0.09	0.10	0.19	0.09	0.06	0.09	0.10	0.09	0.09	0.06	0.09	0.10	0.09	0.09
20	0.12	0.16	0.19	0.14	0.16	0.11	0.16	0.18	0.14	0.16	0.11	0.14	0.17	0.14	0.16
25	0.18	0.27	0.32	0.27	0.29	0.18	0.26	0.31	0.26	0.28	0.16	0.24	0.29	0.24	0.26
30	0.10	0.14	0.15	0.45	0.52	0.10	0.13	0.14	0.43	0.50	0.09	0.13	0.14	0.41	0.47
35	0.05	0.06	0.07	0.21	0.29	0.05	0.06	0.07	0.20	0.28	0.05	0.06	0.07	0.19	0.26
40	0.04	0.05	0.05	0.14	0.16	0.04	0.05	0.05	0.14	0.16	0.04	0.05	0.05	0.14	0.16
45	0.02	0.04	0.05	0.09	0.13	0.02	0.04	0.05	0.09	0.13	0.02	0.04	0.05	0.09	0.13
50	0.02	0.04	0.04	0.09	0.10	0.02	0.04	0.04	0.09	0.10	0.02	0.04	0.04	0.09	0.10
55	0.02	0.03	0.04	0.06	0.08	0.02	0.03	0.04	0.06	0.08	0.02	0.03	0.04	0.06	0.08
60	0.02	0.03	0.04	0.06	0.08	0.02	0.03	0.04	0.06	0.08	0.02	0.03	0.04	0.06	0.08
65	0.02	0.03	0.04	0.06	0.08	0.02	0.03	0.04	0.06	0.08	0.02	0.03	0.04	0.06	0.08
70	0.01	0.03	0.04	0.04	0.04	0.01	0.03	0.04	0.04	0.04	0.01	0.03	0.04	0.04	0.04
75	0.01	0.03	0.04	0.04	0.04	0.01	0.03	0.04	0.04	0.04	0.01	0.03	0.04	0.04	0.04
80	0.01	0.02	0.03	0.03	0.02	0.01	0.02	0.03	0.03	0.02	0.01	0.02	0.03	0.03	0.02
85	0.01	0.02	0.02	0.03	0.02	0.01	0.02	0.02	0.03	0.02	0.01	0.02	0.02	0.03	0.02
90	0.01	0.02	0.02	0.03	0.02	0.01	0.02	0.02	0.03	0.02	0.01	0.02	0.02	0.03	0.02
95	0.01	0.02	0.02	0.03	0.02	0.01	0.02	0.02	0.03	0.02	0.01	0.02	0.02	0.03	0.02
100	0.01	0.02	0.02	0.03	0.02	0.01	0.02	0.02	0.03	0.02	0.01	0.02	0.02	0.03	0.02
105	0.01	0.02	0.02	0.03	0.02	0.01	0.02	0.02	0.03	0.02	0.01	0.02	0.02	0.03	0.02
110	0.01	0.02	0.02	0.03	0.02	0.01	0.02	0.02	0.03	0.02	0.01	0.02	0.02	0.03	0.02
115	0.01	0.02	0.02	0.03	0.02	0.01	0.02	0.02	0.03	0.02	0.01	0.02	0.02	0.03	0.02
120	0.01	0.01	0.02	0.03	0.02	0.01	0.01	0.02	0.03	0.02	0.01	0.01	0.02	0.03	0.02
125											0.01	0.01	0.01	0.01	0.02
130											0.01	0.01	0.01	0.01	0.01
135											0.01	0.01	0.01	0.01	0.01
140											0.01	0.01	0.01	0.01	0.01
145											0.01	0.01	0.01	0.01	0.01
150											0.01	0.01	0.01	0.01	0.01

155											0.01	0.01	0.01	0.01	0.01
160											0.01	0.01	0.01	0.01	0.01
165											0.01	0.01	0.01	0.01	0.01
170											0.00	0.00	0.01	0.01	0.01
175											0.00	0.00	0.00	0.01	0.01
180											0.00	0.00	0.00	0.00	0.01
Total	0.80	1.23	1.44	2.09	2.32	0.79	1.21	1.41	2.05	2.28	0.85	1.26	1.48	2.11	2.34

* *Time in minutes*

** Rainfall in inches

Table 503

Time-Intensity-Frequency Tabulation

Duration		5 Min		10 Min		15 Min		30 Min		60 Min	
Duration Factors		0.29		0.45		0.57		0.79		1.00	
County Zone	Frequency	Depth**	Intensity*	Depth**	Intensity*	Depth**	Intensity*	Depth**	Intensity*	Depth**	Intensity*
Jefferson I	2-Yr	0.30	3.55	0.46	2.75	0.58	2.33	0.81	1.61	1.02	1.02
	5-Yr	0.41	4.94	0.64	3.83	0.81	3.24	1.12	2.24	1.42	1.42
	10-Yr	0.49	5.85	0.76	4.54	0.96	3.83	1.33	2.65	1.68	1.68
	50-Yr	0.67	8.07	1.04	6.26	1.32	5.29	1.83	3.67	2.32	2.32
	100-Yr	0.77	9.26	1.20	7.18	1.52	6.06	2.10	4.20	2.66	2.66
Jefferson IIA	2-Yr	0.28	3.31	0.43	2.57	0.54	2.17	0.75	1.50	0.95	0.95
	5-Yr	0.39	4.63	0.60	3.59	0.76	3.03	1.05	2.10	1.33	1.33
	10-Yr	0.46	5.46	0.71	4.24	0.89	3.58	1.24	2.48	1.57	1.57
	50-Yr	0.63	7.55	0.98	5.86	1.24	4.95	1.71	3.43	2.17	2.17
	100-Yr	0.72	8.63	1.12	6.70	1.41	5.65	1.96	3.92	2.48	2.48
Jefferson IIB	2-Yr	0.25	2.96	0.38	2.30	0.48	1.94	0.67	1.34	0.85	0.85
	5-Yr	0.35	4.14	0.54	3.21	0.68	2.71	0.94	1.88	1.19	1.19
	10-Yr	0.40	4.84	0.63	3.75	0.79	3.17	1.10	2.20	1.39	1.39
	50-Yr	0.56	6.72	0.87	5.21	1.10	4.40	1.52	3.05	1.93	1.93
	100-Yr	0.64	7.66	0.99	5.94	1.25	5.02	1.74	3.48	2.20	2.20
Jefferson III	2-Yr	0.21	2.54	0.33	1.97	0.42	1.66	0.58	1.15	0.73	0.73
	5-Yr	0.31	3.69	0.48	2.86	0.60	2.42	0.84	1.67	1.06	1.06
	10-Yr	0.37	4.38	0.57	3.40	0.72	2.87	1.00	1.99	1.26	1.26
	50-Yr	0.52	6.23	0.81	4.83	1.02	4.08	1.41	2.83	1.79	1.79
	100-Yr	0.60	7.17	0.93	5.56	1.17	4.70	1.63	3.25	2.06	2.06

* *Depth in Inches*

** Intensity/hour

Figure 501
Rainfall Zones in Jefferson County

Rainfall Zone III extends to the southern boundary of Jefferson County.

Time-Intensity Frequency Curves

Figure 502A
Zone I

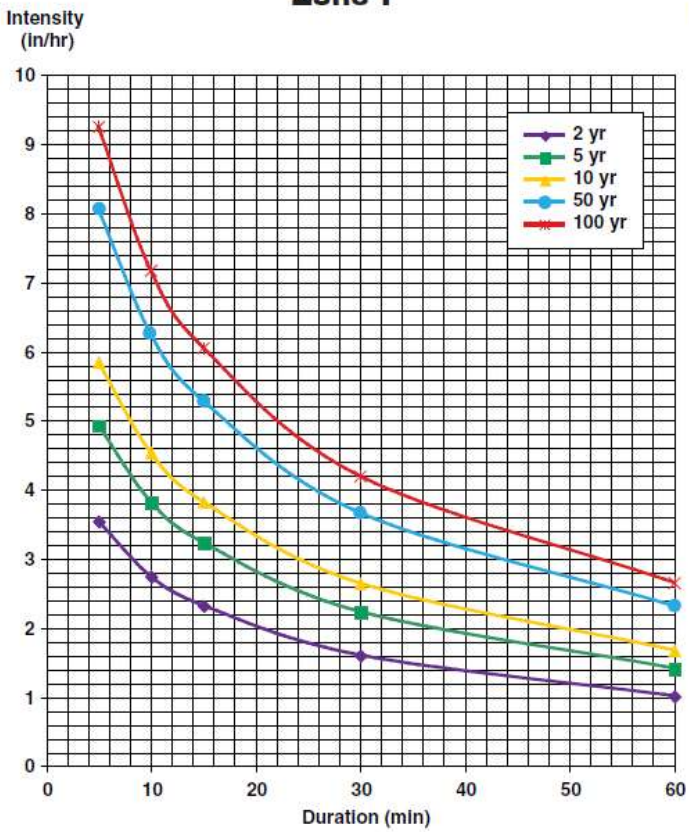

Figure 502B
Zone IIA

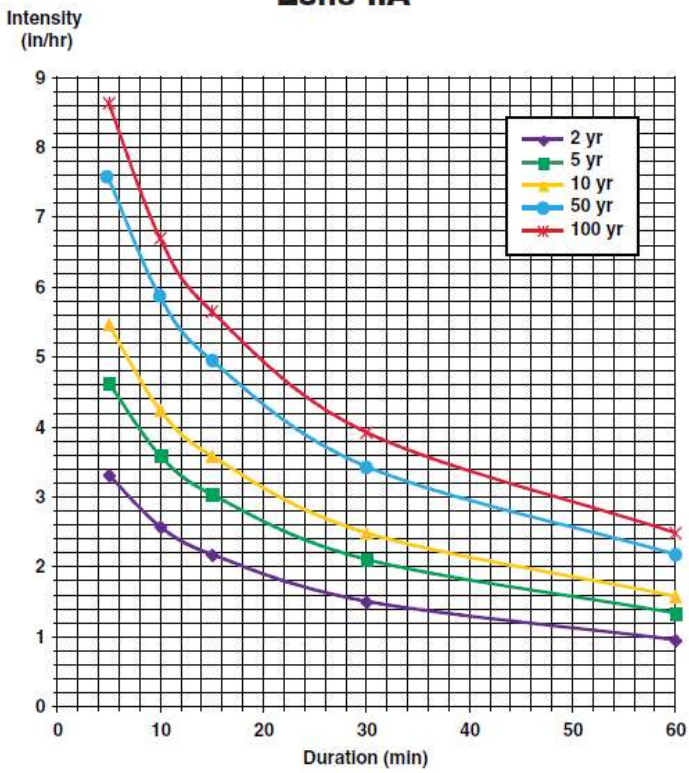

Figure 502C
Zone IIB

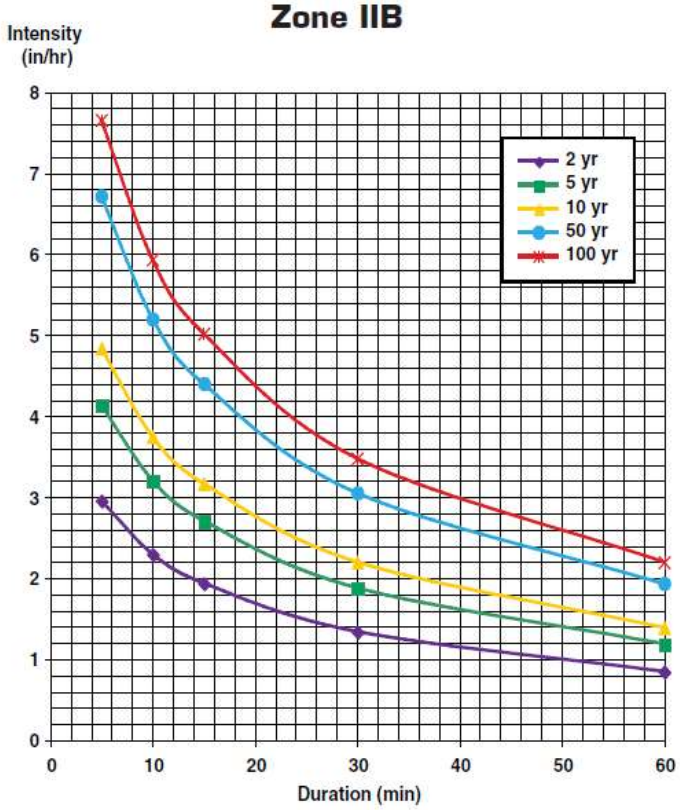

Figure 502D
Zone III

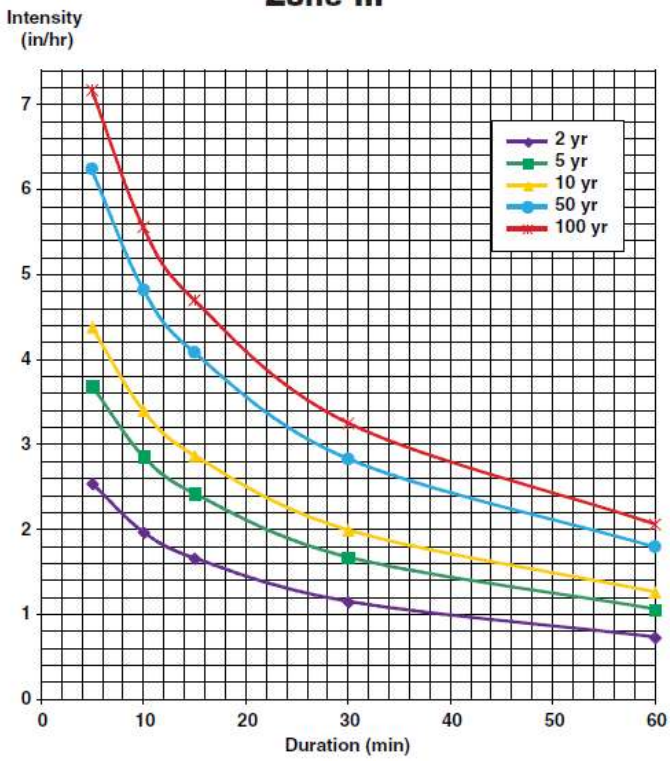

Chapter 6 - Runoff

6.1 Introduction

This chapter presents the criteria and methodology for determining the storm runoff design peaks and volumes to be used in the County in the preparation of storm drainage studies, plans and facility design. The details of the rainfall/runoff models are presented in the *Manual*. The specific input data requirements and modifications to the procedures are presented in this chapter.

6.2 Rational Method

The Rational Method, in widespread use in the Denver Region, will continue to be utilized for the sizing of storm sewers and for determining runoff magnitude from unsewered areas. The limit of application of the Rational Method is approximately 160 acres. It has been concluded that, for tributary basins in excess of 160 acres, the cost of the drainage works justifies significantly more study, thought and judgment on the part of the engineer than is permitted by the Rational Method. When the urban drainage basin exceeds 160 acres, the CUHP method represents better practice and must be used.

The procedures for the Rational Method, as explained in the *Manual*, Volume1, "Runoff", must be followed in the preparation of drainage reports and storm drainage facility designs in the County.

Standard forms and spreadsheets are available in the *MHFD Manual*. The most current versions of these software programs may be obtained through the District's web site (www.udfcd.org).

6.3 Colorado Urban Hydrograph Procedure

CUHP was originally developed for the Denver area at the time the *Manual* was prepared. The method may be used for basins as small as five acres. However, CUHP is required for watershed areas larger than 160 acres. The procedures for CUHP, as explained in the *Manual* will be followed in the preparation of drainage reports and storm drainage facility designs in the County. The design storms to be used with the CUHP method are presented in Tables 502A-D.

6.4 Storm Flow Analysis

When determining the design storm flows, the engineer should follow criteria and guidelines to assure that minimum design standards and uniformity of drainage solutions are maintained throughout the County. The information presented herein will be used by the engineer in the development of design storm runoff.

6.4.1 Onsite Flow Analysis

When analyzing the flood peaks and volumes, the engineer should use the proposed fully developed land use plan to determine runoff coefficients. In addition, the engineer should take into consideration the changes in flow patterns (from the undeveloped site conditions) caused by the proposed street alignments. When evaluating surface flow times, the proposed lot grading will be used to calculate the time of concentration or the CUHP parameters.

6.4.2 Offsite Flow Analysis

The analysis of offsite runoff is dependent on the development status and whether the tributary offsite area lies within a major drainageway basin as defined in Section 3.2.3. In all cases, the minor system is designed for the fully developed minor storm runoff (Section 3.4.1) without the benefits of onsite detention. In some cases, credit is given for detention for the design of the major system (Section 3.3.12).

6.4.2.1 Tributary Area Within a Major Drainageway Basin

(a) Where the offsite area is undeveloped, the runoff will be calculated assuming the basin is fully developed as defined by Planning and Zoning. If this information is not available, then the runoff will be calculated using the coefficients defined in the runoff chapter of the *Manual*. The most current versions of these software programs may be obtained through the District's web site (www.udfcd.org).

(b) Where the offsite area is fully or partially developed, the storm runoff will be based upon the existing platted land uses and topographic features. No credit will be given for onsite detention in the offsite area for any design frequency.

6.4.2.2 Tributary Area Not Within a Major Drainageway Basin

(a) Where the offsite area is undeveloped, the minor system runoff will be calculated assuming the basin is fully developed as defined by Planning and Zoning. If this information is not available, then the runoff will be calculated using the coefficients defined in the runoff chapter of the *Manual*. The most current versions of these software programs may be obtained through the District's web site (www.udfcd.org). The major system runoff (i.e., 10-year and 100-year) may be calculated assuming the historic runoff rates computed in accordance with procedures described in Chapter 14 of these *CRITERIA*.

(b) Where the offsite area is fully or partially developed, the storm runoff will be based on the existing platted land uses and topographic features, unless onsite detention in the offsite area has been constructed and accepted by the County. However, no credit will be given for onsite detention in the offsite area for the minor system design, unless otherwise approved by Planning and Zoning.

Chapter 7 - Open Channels

7.1 Introduction

This chapter addresses the technical criteria for the hydraulic evaluation and hydraulic design of open channels in the County. The information presented herein is considered to be a minimum standard. In many instances, special design or evaluation techniques will be required. Except as modified herein, all open channel criteria will be in accordance with the *Manual* and *Open Channel Hydraulics, Chow*, Ven T., McGraw-Hill, Inc., New York, New York, 1959

7.2 Channel Types

The channels in the County area are defined as natural or artificial. Natural channels include all water courses that have occurred naturally by the erosion process such as Clear Creek, Bear Creek, South Platte River, Ralston Creek, Dutch Creek, Van Bibber Creek, Big Dry Creek and Lena Gulch. Artificial channels are those constructed or developed by human effort.

7.2.1 Natural Channels

The hydraulic properties of natural channels vary along the channel reach and can be either controlled to the extent desired or altered to meet given requirements. The initial decision to be made regarding natural channels is whether or not the channel is to be protected from erosion due to high velocity flows or protected from excessive silt deposition due to low velocities.

Many natural channels in urbanized and to-be-urbanized areas have mild slopes, are reasonably stable and are not in a state of serious degradation or aggradation. However, if a natural channel is to be used for carrying storm runoff from an urbanized area, the altered nature of the runoff peaks and volumes from urban development will cause erosion. Detailed hydraulic analysis will be required for natural channels in order to identify the erosion tendencies. Some onsite modifications of the natural channel, such as grade control structures, may be required to assure a stabilized condition.

The investigations necessary to assure that the natural channels will be adequate are different for every waterway. The engineer must prepare cross sections of the channel, define the water surface profile for the minor and major design flood, investigate the bed and bank material to determine erosion tendencies and study the bank slope stability of the channel under future conditions of flow. Supercritical flow does not normally occur in natural channels, but calculations must be made to assure that the results do not reflect supercritical flow.

7.2.2 Grass Lined Channels

Grass lined channels are the most desirable of the artificial channels. The grass will stabilize the body of the channel, consolidate the soil mass of the bed, check the erosion on the channel surface and control the movement of soil particles along the channel bottom. The channel storage, the lower velocities and the greenbelt multiple-use benefits obtained create significant advantages over other artificial channels.

The presence of grass in channels creates turbulence which results in loss of energy and increased flow retardance. Therefore, the designer must give full consideration to sediment deposition and to scour, as well as hydraulics. Unless existing development within the County restricts the availability of ROW, only channels lined with grass will be considered acceptable for major drainageways.

For the purposes of these *CRITERIA*, sandy soils are defined as non-cohesive sands classified as SW, SP or SM in accordance with the Unified Soil Classification System.

7.2.3 Composite Channels

Composite channels are a type of grass-lined channel with a distinct low-flow channel that is vegetated with a mixture of wetland and riparian species. Design of composite channels will be in accordance with the *Manual*.

7.2.4 Bioengineered Channels

Bioengineered channels are a type of grass-lined channel that utilize vegetative components and other natural materials in combination with structural measures to construct natural-like channels that are stable and resistant to erosion. Design of bioengineered channels will be in accordance with the *Manual*.

7.2.5. Concrete Lined Channels

Concrete lined channels for major drainageways will be permitted only where ROW restrictions within existing development prohibit grass

lined channels or any other channel lining type. The lining must be designed to withstand the various forces and actions which tend to overtop the bank, deteriorate the lining, erode the soil beneath the lining and erode unlined areas, especially for the supercritical flow conditions.

If the project constraints suggest the use of a concrete channel for a major drainageway, the applicant will present the concept with justification to Planning and Zoning for consideration of a waiver from these *CRITERIA*.

A Design Report is required for approval of a concrete lined channel. The contents of such report will be determined by Planning and Zoning. On the as-built drawings, the engineer will be required to certify that the concrete used in the lining was tested and meets the accepted specifications.

7.2.6. Rock Lined Channels

Riprap lined channels are generally discouraged and will be permitted only in areas of existing development where ROW for major drainageways is limited and such limitation prohibits the use of grass lined channels. The advantage of rock lining a channel is that a steeper channel grade and steeper side slopes can be used. Rock linings (i.e., revetments) are permitted as a means of controlling erosion for natural channels. The disadvantages are the large initial cost of construction and the high maintenance costs due to vandalism.

If the project constraints suggest the use of riprap lining for a major drainageway, then the engineer must present the concept, with justification, to Planning and Zoning for consideration of a waiver from these *CRITERIA*. The design of rock-lined channels will be in accordance with the *Manual*.

7.3 Flow Computation

Uniform flow and critical flow computations will be in accordance with the *Manual*.

7.4 Design Standards for Major Drainageways

These standards cover the design of major drainageways as defined by the policy of Section 3.2.3. The design standards for open channels cannot be presented in a step-by-step fashion because of the wide range of design options available to the design engineer. Certain planning and conceptual design criteria are particularly useful in the preliminary design of a channel. These *CRITERIA*, which have the greatest effect on the performance and cost of the channel, are discussed below.

7.4.1 Natural Channels

The design criteria and evaluation techniques for natural channels are:

1. The channel and overbank areas will have adequate capacity for the 100-year storm runoff.

2. Natural channel segments shall be designed to have a calculated Froude number of 0.6 for non-cohesive soils or those with poor vegetation and a maximum of 0.8 for vegetated cohesive soils for the 100-year flood peak.

3. The water surface profiles will be defined so that the floodplain can be zoned and protected.

4. Filling of the Floodplain Overlay District reduces valuable channel storage capacity and tends to increase downstream runoff peaks.

5. Roughness factors (n), which are representative of unmaintained channel conditions, will be used for the analysis of water surface profiles.

6. Roughness factors (n), which are representative of maintained channel conditions, will be used to determine velocity limitations.

7. Structures may be required to control erosion for both the major and the minor storm runoff and should appear as natural features by imitating surrounding vegetation and natural materials. Where possible, locate structures at principal grade changes to minimize cost of retaining structures, reduce perceived scale and appearance of mass and bulk and use existing land forms of the site. All check drops, dams or structures should, whenever feasible, use natural materials to integrate with natural landscape characteristics.

8. Plan and profile drawings of the floodplain will be prepared. Appropriate allowances for known future bridges or culverts, which can raise the water surface profile and cause the floodplain to be extended, will be included in the analysis. The applicant will contact Planning and Zoning for information on future bridges and culverts.

9. Preserve, maintain or enhance natural waterway channel boundaries and alignment in their natural condition as landscape and visual amenities, focal points for development projects and to help define “edges” in and around communities. Preserve vegetation groups, rock outcroppings, terrain form, soil, waterways and bodies of water.

With most natural waterways, erosion control structures should be constructed at regular intervals to decrease the thalweg slope and to control erosion. However, these channels should be left in as near a natural condition as possible. For that reason, extensive modifications should not be undertaken unless they are found to be necessary to avoid excessive erosion with subsequent deposition downstream.

The usual rules of freeboard depth, curvature and other rules which are applicable to artificial channels, do not apply for natural channels. All structures constructed along the channel will be elevated a minimum of one foot above the 100-year water surface. There are significant advantages which may occur if the designer incorporates into his planning the overtopping of the channel and localized flooding of adjacent areas which are laid out and developed for the purpose of being inundated during the major runoff peak.

If a natural channel is to be utilized as a major drainageway for a development, then the applicant will meet with Planning and Zoning to discuss the concept and to obtain the requirements for planning and design documentation. Approval of the concept and design will be made in accordance with the requirements of Chapter 2 of these *CRITERIA*.

7.4.2 Grass Lined Channels

Key parameters in grass lined channel design include velocity, slopes, roughness coefficients, depth, freeboard, curvature, cross section shape and lining materials. Other factors such as water surface profile computation, erosion control, drop structures and transitions also play an important role. A discussion of these parameters is presented below.

1. Flow Velocity

The maximum normal depth velocity for the 100-year flood peak will not exceed 5.0 feet per second for grass lined channels. The Froude number (turbulence factor) will be less than 0.8 for grass lined channels. Grass lined channels having a Froude number greater than 0.8 are not permitted. The minimum velocity, wherever possible, will be greater than 2.0 feet per second for the minor storm runoff.

2. Longitudinal Channel Slopes

Grass lined channel slopes are dictated by velocity and Froude number requirements. Where the natural topography is steeper than desirable, drop structures will be utilized to maintain design velocities and Froude numbers.

3. Freeboard

Except where localized overflow in certain areas is desirable for additional ponding benefits or other reasons, the freeboard for the 100-year flow will be as follows:

$$HFB = 0.5 + \frac{V^2}{2g}$$

where

HFB = freeboard height (feet)

V = average channel velocity (fps)

g = acceleration of gravity = 32.2 ft/sec^2

The minimum freeboard will be 1.0 foot.

---

4. Curvature (Horizontal)

The center line curvature will have a radius twice the top width of the design flow but not less than 100 feet.

5. Roughness Coefficient

The variation of Manning's "n" with the retardance and the product of mean velocity and hydraulic radius, as presented in Figure 701, will be used in the capacity computation.

Retardance curve C will be used to determine the channel capacity, since a mature channel (i.e., substantial vegetation with minimal pervious maintenance) will have a higher Manning's "n" value. However, a recently constructed channel will have minimal vegetation and the retardance will be less than the mature channel. Therefore, retardance curve D will be used to determine the limiting velocity in a channel.

6. Cross Sections

The channel shape may be almost any type suitable to the location and to the environmental conditions. Often the shape can be chosen to suit open space and recreational needs. The limitations within which the design must fall for the major storm design flow include:

a. Trickle Channel

The base flow will be carried in a trickle channel except for sandy soils (see Section 7.2.2). The minimum capacity will be 1.0 percent to 3.0 percent of the 100-year flow but not less than 1 cfs. Trickle channels will be constructed of concrete or other approved materials to minimize erosion, to facilitate maintenance and to aesthetically blend with the adjacent vegetation and soils. Recommended trickle channel sections are presented on Figure 703. The minimum trickle channel width will be four feet.

An alternative trickle channel treatment is of greater capacity with natural bottom and appropriate riparian vegetation types and mix along edges to reduce erosion and create wetland area. Channel alignment should vary in character with a meandering quality. Drop structures should be included where necessary and appear as natural features.

b. Main Channel

A main channel is required for sandy soils. The side slopes must be 4:1 or flatter. The depth of the main channel is not included in the normal depth limitation. A main channel can also be used for non-sandy soils.

c. Bottom Width

The minimum bottom width will be consistent with the maximum depth and velocity criteria. The minimum bottom width will be four feet or the trickle channel width when trickle channel is required.

d. Easement/ROW Width

The minimum easement/ROW width will include freeboard and a 12-foot wide maintenance access road.

e. Flow Depth

The maximum design depth of flow (outside the trickle channel area and main channel area for sandy soils) for the 100-year flood peak will be limited to 5.0 feet in grass lined channels.

f. Maintenance Access Road

A maintenance access road will be provided along the entire length of all major drainageways with a minimum width of 12 feet. The County may require the road to be surfaced with six inches of Class 2 road base or concrete slab.

g. Side Slopes

Main channel side slopes will be 4 (horizontal) to 1 (vertical) or flatter.

7. Vegetation

The grass lining for channels will be in accordance with the *Manual*.

Vegetation and landform variations are encouraged to enhance the aesthetic quality within channels as long as the functional factors mentioned below are not compromised. It is recognized that channel capacity will be increased to accommodate an increase in plant

material types and densities and variation of landform. Overstory canopy trees are allowed outside of high hazard areas.

If extensive modification or disruption is necessary, rehabilitate channel corridor to conform to or improve upon predevelopment conditions. The stream form and vegetative character should appear as it would occur under long-term natural processes. Alternative techniques that can be used to achieve these include: varying the slope and edge of channel; the use of river rock for riprap; replanting appropriately sized riparian vegetation; and introducing meandering character on flat areas and pools and rocks in steeper areas. A concentration of plant materials should be included where drainages intersect arterial streets, when feasible, to maintain and enhance visual access from roadways.

The distance on each side of any flowing or intermittent stream channel should be large enough to ensure its use as an active and passive recreational and visual amenity.

8. Erosion Control

The requirements for erosion control for grass lined channels will be as defined in the *Manual*. The design of conduit outlet structures will be in accordance with the *Manual*.

9. Water Surface Profiles

Computation of the water surface profile will be presented for all open channels utilizing standard backwater methods, taking into consideration losses due to changes in velocity of channel cross section, drops, waterway openings or obstructions. The energy gradient will be shown on all drawings.

7.5 Design Standards for Small Drainageways

These standards cover the design of channels that are not classified as a major drainageway in accordance with the policy of Section 3.2.3. Additional flexibility and less stringent standards are allowed for small drainageways.

7.5.1 Natural Channels

The design criteria and evaluation techniques for natural channels are:

1. The channel and overbank areas will have adequate capacity for the 100-year storm runoff.

2. Natural channel segments shall be designed to have a calculated Froude number of 0.6 for non-cohesive soils or those with poor vegetation and a maximum of 0.8 for vegetated cohesive soils for the 100-year flood peak.

3. Roughness factors (n), which are representative of unmaintained channel conditions, will be used for the analysis of water surface profiles.

4. Roughness factors (n), which are representative of maintained channel conditions, will be used to determine velocity limitations.

5. Erosion control structures, such as check drops or check dams, may be required to control flow velocities, including the minor storm runoff.

6. Plan and profile drawings will be prepared showing the 100-year water surface profile, floodplain and details of erosion protection, if required.

7.5.2 Grass Lined Channels

Key parameters in grass lined channel design include velocity, slopes, roughness coefficients, depth, freeboard, curvature, cross section shape and lining materials. Other factors such as water surface profile computation, erosion control, drop structures and transitions also play an important role. A discussion of these parameters is presented below.

1. Flow Velocity

The maximum normal depth velocity for the 100-year flood peak will not exceed 7.0 feet per second for grass lined channels (see Section 7.2.2). The Froude number (turbulence factor) will be less than 0.8 for grass lined channels. Grass lined channels having a Froude number greater than 0.8 are not permitted. The minimum velocity, wherever possible, will be greater than 2.0 feet per second for the minor storm runoff.

2. Longitudinal Channel Slopes

Grass lined channel slopes are dictated by velocity and Froude number requirements. Where the natural topography is steeper than desirable, drop structures will be utilized to maintain design velocities and Froude numbers.

3. Freeboard

A minimum freeboard of 1 foot will be included in the design for the 100-year flow. For swales (i.e., small drainageways with a 100-year flow less than 20 cfs), the minimum freeboard requirements are 6 inches.

4. Curvature (Horizontal)

The centerline curvature will have a minimum radius twice the top width of the design flow but not less than 50 feet. The minimum radius for channels with a 100-year runoff of 20 cfs or less will be 25 feet.

5. Roughness Coefficient

The variation of Manning's "n" with the retardance (curve "C") and the product of mean velocity and hydraulic radius, as presented in Figure 701, will be used in the computation of capacity and velocity.

6. Cross Sections

The channel shape may be almost any type suitable to the location and to the environmental conditions. The section may also be simple V-Section for swales (i.e., Q100 less than 20 cfs). The limitations on the cross section are as follows:

a. Trickle Channel

The base flow (except for swales) will be carried in a trickle channel for non-sandy soils. The minimum capacity will be from 1.0 percent to 3.0 percent of the 100-year flow but not less than 1 cfs. The trickle channel can be constructed of concrete, rock, cobbles or other suitable materials. For sandy soils, a main channel is required in accordance with Section 7.4.2.6(b). Factors to be considered when establishing the need for trickle channels are: drainage slope, soil type and upstream impervious area. For 100-year runoff peaks of 20 cfs or less, trickle channel requirements will be evaluated for each case. Trickle channels help preserve swales crossing residential property.

b. Easement/ROW Width

The minimum easement/ROW width will include freeboard and should include a maintenance access.

c. Flow Depth

The maximum design depth of flow (outside the trickle channel area and main channel area for sandy soils) for the 100-year flood peak will be limited to 5 feet in grass lined channels.

d. Side Slopes

Main channel side slopes will be 4 (horizontal) to 1 (vertical) or flatter. Side slopes for channels with 100-year runoff peaks of 20 cfs or less will be 3 (horizontal) to 1 (vertical) or flatter.

7. Grass Lining

The grass lining for channels will be in accordance with the *Manual*.

8. Erosion Control

The requirements for erosion control for grass lined channels will be as defined in the *Manual*. The design of conduit outlet structures will be in accordance with the *Manual*.

9. Hydraulic Information

Calculations of the capacity, velocity and Froude numbers will be submitted with the construction drawings.

10. Design Example

Grass-lined channel for a watershed area under 130 acres in area.

100-year flow = 30 cfs

Slope = 2%

Side Slopes = 4:1

Find the minimum easement width and the required open channel cross-section.

Channel Cross Section

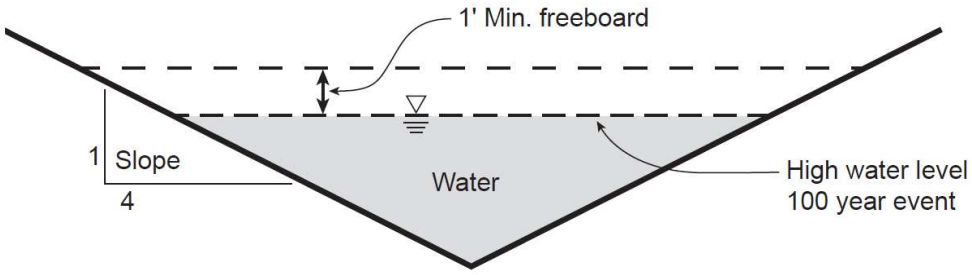

Step 1: (Determine Manning' n for both the (C) and (V) curves)

To determine the Manning's n, Figure 701 will be used. To find the V*R-value, an estimated value will have to be used to start the process. We will estimate that V*R is about 2, which would give us a Manning's n of .05. If this estimated number is not between the (V) and (C) curves, the calculations will need to be run with the Manning's n that is computed from the graph. Using the Manning's equation Q= 1.49/n (AR2/3S1/2), the following information is obtained:

Normal Depth = 1.49'

Velocity (V) = 3.38 feet/sec

Hydraulic Radius (R) = .722

V*R = 2.44

Manning's n (V) = .043

Manning's n (C) = .051

(From Figure 701)

Our estimate for the Manning's n was .050, which is in-between the actual (V) and (C) values; therefore, no further iterations are necessary.

Step 2: (Check limiting velocity and Froude Number with the Manning's n value from the (V) curve).

Using a Manning's n of .043, the following information is calculated from the Manning's equation:

Normal depth = 1.41'

Velocity = 3.79 ft/sec (under 5 ft/sec OK)

Hydraulic Radius (R) = .722

Flow cross-sectional area (A) = 7.92 ft^2

Top Width (T) = 11.26'

Hydraulic Depth (D) = A/T = .7033'

Calculate the Froude Number from the equation Fr = V/(G*D).5

V = average velocity (ft/sec)

G = acceleration of gravity = 32.2 ft/sec^2

D = Hydraulic Depth = A/T

The Froude number is calculated to be .796, which is under the maximum of .8.

Step 3: Use the channel capacity design curve (C curve to determine how wide the drainage easement has to be).

Using the Manning's equation with a Manning's n of .051 from the previously calculated C curve, the following were calculated:

Depth = 1.50'

Depth with required freeboard = 2.5'

Required width of channel = 20'

Minimum easement width for maintenance = must accommodate Q100 plus one foot of freeboard and required access

Setback from property line as defined in the ZR

The cross-section shown below would be acceptable:

Channel Cross Section Near Property Line

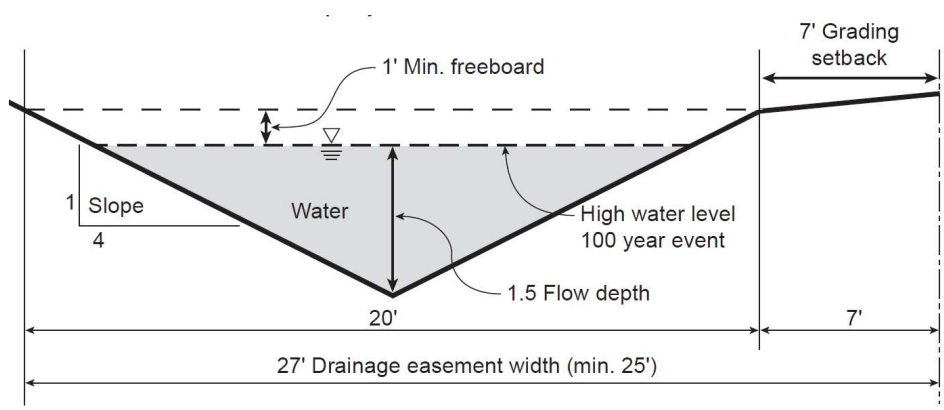

7.5.3 Concrete Lined Channels

The criteria for the design and construction of concrete lined channels is presented below:

1. Hydraulics

a. Freeboard

Adequate channel freeboard above the designed water surface will be provided and will not be less than that determined by the following:

$$HFB = 2.0 + 0.025\,V\,(d)^{1/3}$$

where

HFB = freeboard height (feet)
V = velocity (fps)
d = depth of flow (feet)

Freeboard will be in addition to superelevation, standing waves and/or other water surface disturbances. These special situations are to be addressed in a Design Report to be submitted with the construction drawings and specifications (Section 2.7).

Concrete side slopes will be extended to provide freeboard.

b. Superelevation

Superelevation of the water surface will be determined at all horizontal curves, and design of the channel section adjusted accordingly.

c. Velocities

Flow velocities will not exceed 18 fps during the 100-year flood.

2. Concrete Materials

A Design Report will be prepared as stated in Section 7.2.5. The minimum concrete material specifications are as follows:

a. Cement type: sulphate resistant.

b. All concrete will meet CDOT Class B specifications.

c. Maximum water-cement ratio: 0.50 (six gals. per sack).

d. Admixtures: All proposed admixtures will be discussed in the Design Report.

3. Concrete Lining Section

a. All concrete lining will have a sufficient thickness to withstand the structural and hydraulic loads.

b. The side slopes will be a maximum of 2 (vertical) to 1 (horizontal), or a structurally reinforced wall if steeper.

4. Concrete Joints

a. Expansion/contraction joints will be installed where new concrete lining is connected to a rigid structure or to existing concrete lining which is not continuously reinforced.

b. Longitudinal joints, where required, will be constructed on the sidewalls at least one foot vertically above channel invert.

c. All joints will be designed to prevent differential movement.

d. Construction joints are required for all cold joints and where the lining thickness changes.

5. Concrete Finish

The surface of the concrete lining will be provided with a wood float finish. Excessive working or wetting of the finish will be avoided.

6. Concrete Curing

All concrete will be cured by the application of a liquid membrane-forming curing compound (white pigmented) upon completion of the concrete finish.

7. Reinforcement steel (where used)

a. Steel reinforcement will be minimum grade-40 deformed bars. Wire mesh will not be used.

b. Ratio of longitudinal steel area to concrete cross sectional area will be greater than 0.005.

c. Ratio of transverse steel area to concrete cross sectional area will be greater than 0.0025.

d. Additional steel as needed if a retaining wall structure is used.

8. Earthwork

The following areas will be compacted to a least 95 percent of maximum density as determined by ASTM D-698 (Standard Effort):

a. The 12 inches of subgrade immediately beneath concrete lining (both channel bottom and side slopes).

b. Top 12 inches of maintenance road.

c. Top 12 inches of earth surface within 10 feet of concrete channel lip.

d. All fill material.

9. Bedding

Provide six inches of granular bedding equivalent in gradation to 3/4" concrete aggregate (*Standard Specifications for Road & Bridge Construction*, CDOT, Current printing, Section 703.02, No. 67) under channel bottom and side slopes.

10. Underdrain

Longitudinal underdrains will be provided on 10-foot centers and will daylight at the check drops. A check valve or flap gate will be provided at the outlet to prevent backflow into the drain. Weep holes will be provided in vertical wall sections of the channel.

11. Safety Requirements

a. A fence will be installed, as approved by Planning & Zoning, to prevent access wherever the 100-year channel flow depths exceed three feet.

7.5.4 Riprap Lined Channels

The criteria for the design and construction of riprap lined channels will be in accordance with the *Manual*.

Riprap lined channels will be designed for a turbulence factor (Froude number) less than 0.8 for the 100-year flood peaks. The riprap will be designed and constructed in accordance with Section 12.2, "Conduit Outlet Structures" of these *CRITERIA*. Freeboard requirements will be in accordance with the standards for grass lined channels defined in Section 7.4.2.3 of these *CRITERIA*.

7.6 Street/Roadside Ditches

The criteria for the design of street/roadside ditches is similar to the criteria for grass lined channels with modifications for the special purpose of minor storm drainage. The criteria is as follows (refer to Figure 702):

1. Capacity

Street/Roadside ditches will have adequate capacity for the minor storm runoff peaks. Capacity will be as defined in Table 701. Where the storm runoff exceeds the capacity of the ditch, a storm sewer system will be required.

2. Flow Velocity

The maximum velocity for the major storm flood peak will not exceed 5 feet per second

3. Curvature

The minimum radius of curvature will be 25 feet.

4. Roughness Coefficient

Manning's "n" values presented in Figure 701 will be used in the capacity computation for street/roadside ditches.

5. Grass Lining

The grass lining will be in accordance with the *Manual*. Alternative seed mixes may be required by Planning and Zoning as recommended by the JCD.

6. Cross Culvert Location

The surface drainage in a street/roadside ditch will not be carried in excess of 500 feet before being discharged into a natural drainageway. Grade changes of greater than 2% will require a cross culvert. The final location of culverts may be slightly altered by existing field conditions encountered during installation. Culverts will be installed at the slope of the natural terrain.

7. Major Drainage Capacity

The capacity of street/roadside ditches for major drainage flow is restricted by the maximum flow depth allowed at the street crown (Section 3.4.4). However, the flow spread should not extend outside the street ROW.

7.7 Channel Rundowns

A channel rundown is used to convey storm runoff from the bank of a channel to the invert of an open channel or drainageway. The purpose of the structure is to minimize channel bank erosion from concentrated overland flow. The design criteria for channel rundowns is as follows:

7.7.1 Cross-Sections

Typical cross-sections for channel rundowns are presented in Figure 704.

7.7.2 Design Flow

The channel rundown will be designed to carry a minimum of the minor storm runoff or 1 cfs, whichever is greater.

7.7.3 Flow Depth

The maximum depth at the design flow will be 12 inches. Due to the typical profile of a channel rundown beginning with a flat slope and then dropping steeply into the channel, the design depth of flow will be the computed critical depth for the design flow.

7.7.4 Outlet Configuration

The channel rundown outlet will enter the drainageway at the trickle channel flowline. Erosion protection of the opposite channel bank will be provided by a 24-inch layer of grouted Type-L riprap. The width of this riprap erosion protection will be at least three times the channel rundown width or pipe diameter. Riprap protection will extend up the opposite bank to the minor storm flow depth in the drainageway or 2 feet, whichever is greater.

Table 701

Street/Roadside Ditch Capacities

Ditch Slope	Ditch Type 1		Ditch Type 2		Ditch Type 3 *(Private Road Only)*	
	Capacity CFS	Velocity FPS	Capacity CFS	Velocity FPS	Capacity CFS	Velocity FPS
2%	26	4.2	36	4.16	1.9	0.95
2.50%	31	5	42	4.89	2.5	1.25
3.00%	32	5	40	5	3.2	1.6
3.50%	30	5	37	5	4	2
4.00%	28	5	33	5	4.8	2.4
5.00%	21	5	26	5	6	3.1
6.00%	17	5	22	5	8	4
7.00%	15	5	19	5	8	5
8.00%	13	5	16	5	7	5
10.00%	11	5	13	5	6	5
12.00%	9	5	11	5	5	5

... *Permitted on all mountain roads and local and collector streets*
... *Only permitted on private and public roads in the mountains*
... *Only permitted on private roads in the mountains*
... *Only permitted on private roads where the natural terrain bears between south 60 east and south 45 west*

Figure 701

Roughness Coefficients for Grassed Channels

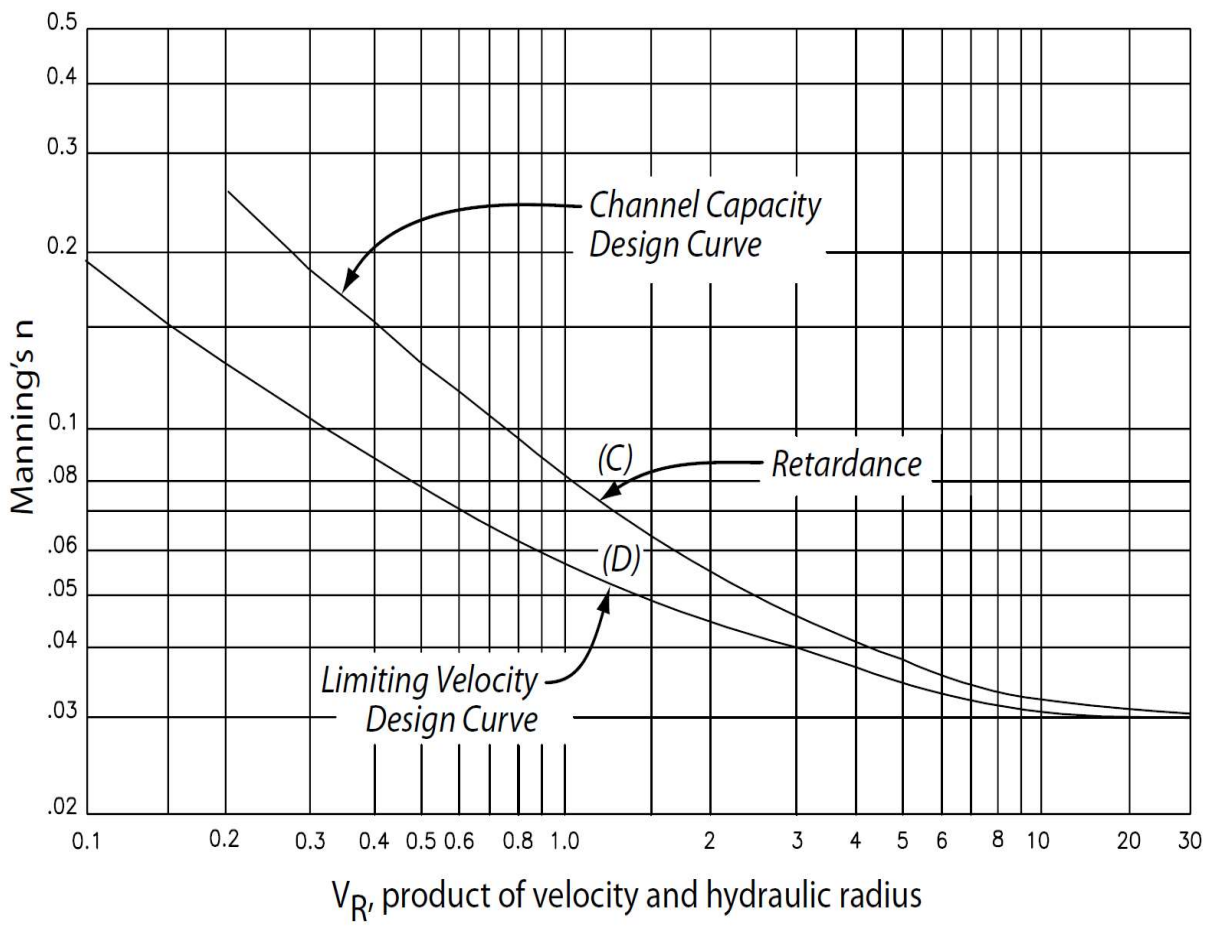

Reference: Handbook of Channel Design for Soil and Water Conservation, *U.S. Department of Agriculture, Soils Conservation Service, No. SCS-TP-61 March, 1947, Rev. June, 1954.*

Figure 702
Street / Roadside Ditch Sections

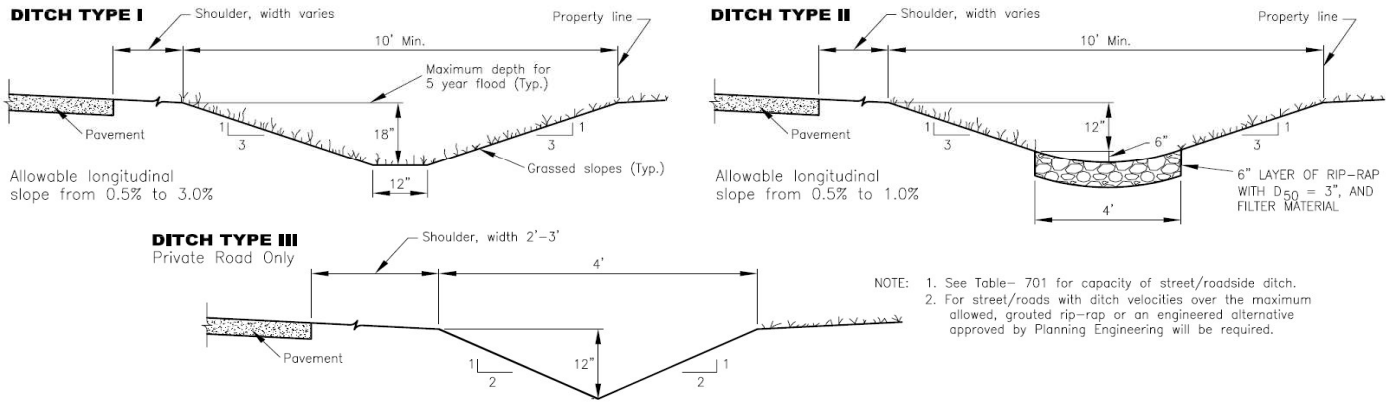

Figure 703
Trickle Channel Details

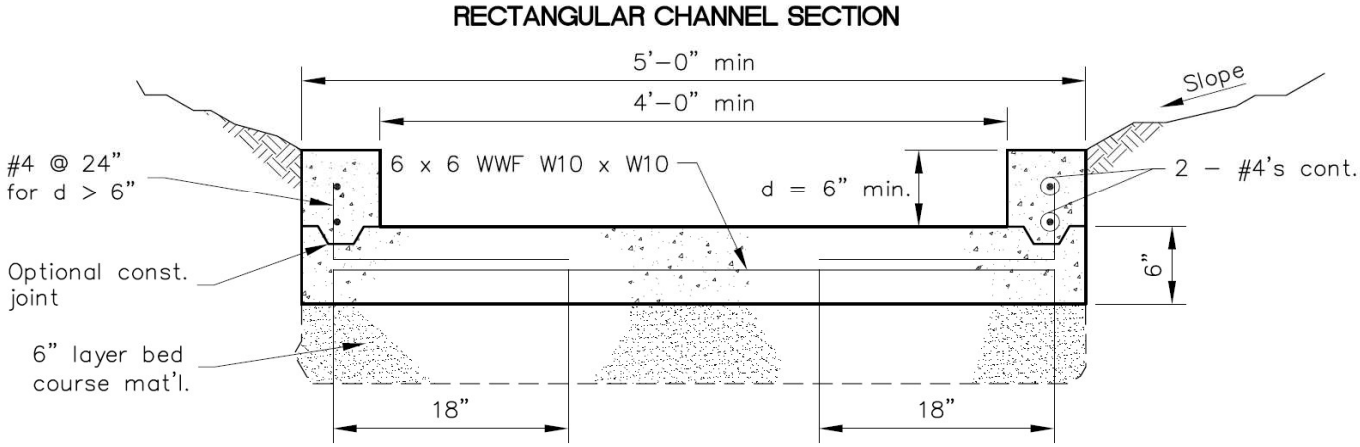

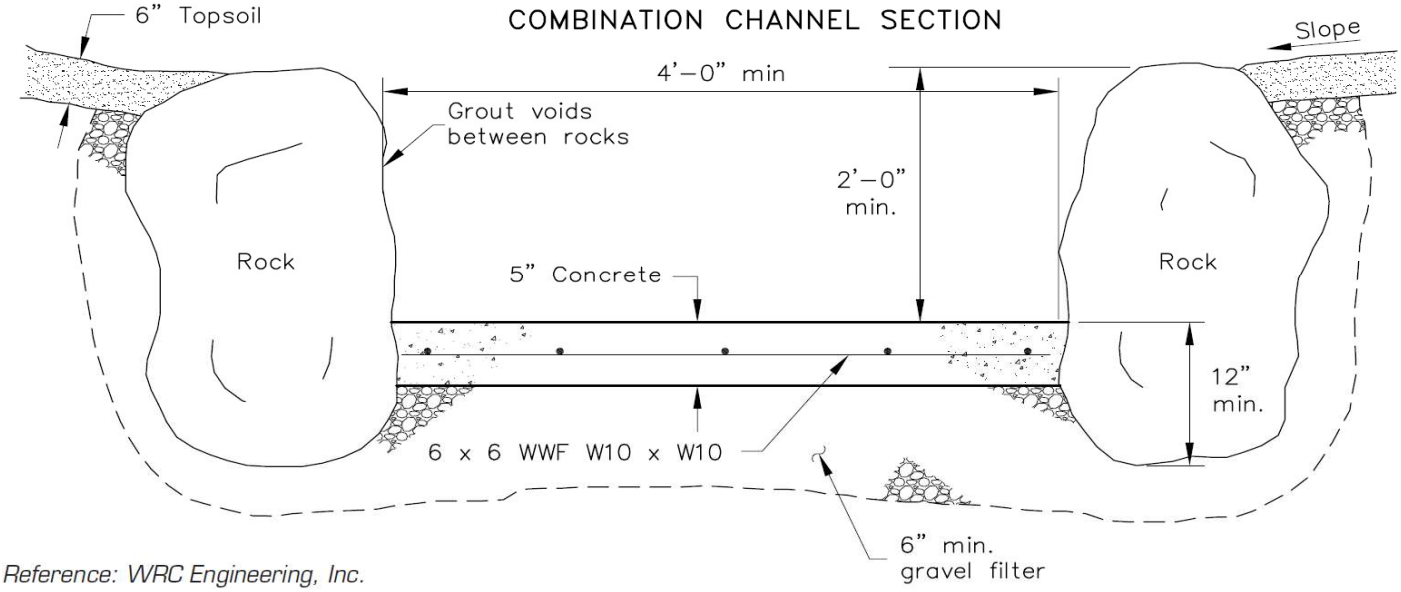

Reference: WRC Engineering, Inc.

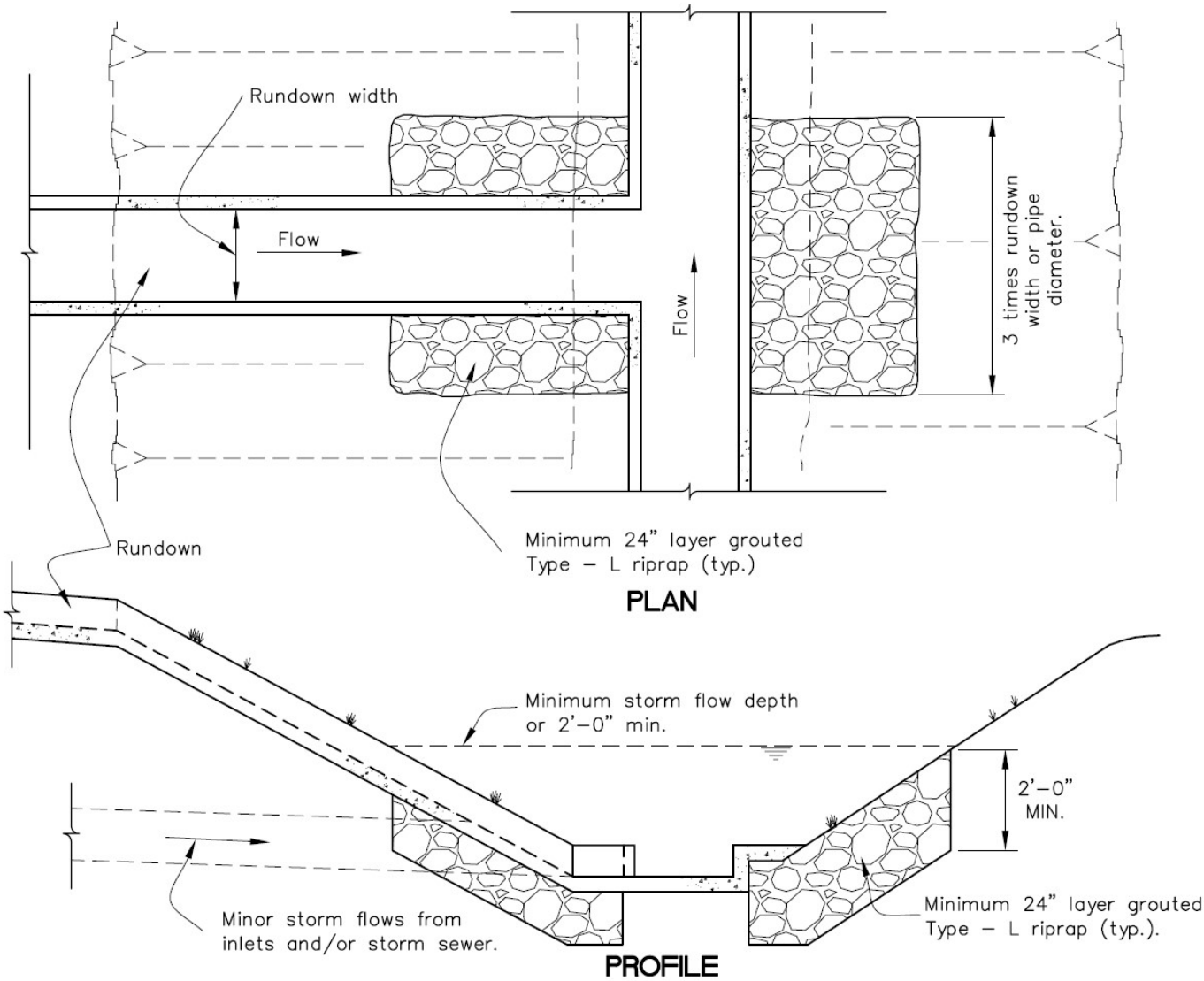
Rundown width
Flow
Flow
3 times rundown width or pipe diameter.
Rundown
Minimum 24" layer grouted Type – L riprap (typ.)
PLAN
Minimum storm flow depth or 2'–0" min.
2'–0" MIN.
Minor storm flows from inlets and/or storm sewer.
Minimum 24" layer grouted Type – L riprap (typ.).
PROFILE

Chapter 8 - Storm Sewers

8.1 Introduction

Storm sewers are a part of the Minor Drainage System, and are required when the other parts of the minor system, primarily curb, gutter and street/roadside ditches no longer have capacity for additional runoff.

Except as modified herein, the design of storm sewers will be in accordance with the "Streets, Inlets and Storm Drain" Chapter of the *Manual*. The user is referred to the *Manual* and other references cited for additional discussion and basic design concepts.

Stormwater Quality Considerations: The use of grass swales to promote infiltration is highly encouraged; since replacing storm sewer with grass swales is not always reasonable, storm sewer is still an integral part in many drainage system designs.

A number of Excel-based workbook tools are offered by UDFCD on their website (www.UDFCD.org).

8.2 Construction Materials

RCP, in accordance with ASTM C76-03, C506-02 or C507-02, and HP Pipe, in accordance with manufacturer specifications, are the only materials acceptable for use in storm sewer construction within County ROW. The minimum class of pipe will be Class II; however, the actual depth of cover, live load and field conditions may require structurally stronger pipe. CSP and HDPE pipe, in accordance with manufacturer's specifications, are only permitted in privately owned and maintained installations.

8.3 Hydraulic Design

Storm sewers will be designed to convey the minor storm flood peaks without surcharging the sewer. The design of the storm sewer must be checked to show that the hydraulic grade line is below the ground elevation during the major storm. To ensure that this objective is achieved the hydraulic and energy grade line calculated by accounting for pipe friction losses and pipe form losses. Total hydraulic losses will include friction, expansion, contraction, bend and junction losses. The methods for estimating these losses are presented in the following sections. The final energy grade line must be at or below the proposed ground surface if the major storm exceeds the allowable street capacity.

8.3.1 Pipe Friction Losses

The Manning's "n" values to be used in the calculation of storm sewer capacity and velocity are presented below:

Pipe Roughness Coefficients

Manning's n-value		
Sewer Type	Capacity Calculation	Velocity Calculation
RCP	0.015	0.011
CSP	0.026	0.021
HDPE/HP	0.012	0.010

8.3.2 Pipe Form Losses

Generally, between the inlet and outlet structures of the storm sewer system, the flow encounters a variety of configurations in the flow passageway such as changes in pipe size, branches, bends, junctions, expansions and contractions. These shape variations impose losses in addition to those resulting from pipe friction. Form losses are the result of fully developed turbulence and can be expressed as follows:

$$HL = K \frac{V^2}{2g}$$

where

HL = head loss (feet)

K = loss coefficient

V = average flow velocity (feet per second)

g = gravitational acceleration (32.2 ft/sec2)

The following is a discussion of a few of the common types of form losses encountered in sewer system design.

1. Bend Losses

The head losses for bends, in excess of that caused by an equivalent length of straight pipe, may be expressed by the relation

$$HL = Kb \frac{V^2}{2g}$$

in which Kb is the bend coefficient. The bend coefficient has been found to be a function of, (a) the ratio of the radius of curvature of the bend to the width of the conduit, (b) deflection angle of the conduit, (c) geometry of the cross section of flow, and (d) the Reynolds number and relative roughness. A table showing the recommended bend loss coefficient is presented below.

Energy Loss Coefficients - Bends

Case I-Conduit on 90 degree curves	
θ	K_b
90	0.25
60	0.20
45	0.18
30	0.14

Note 1: Head loss applied at P.C. for length
Note 2: Applies only to pipe 48" or greater

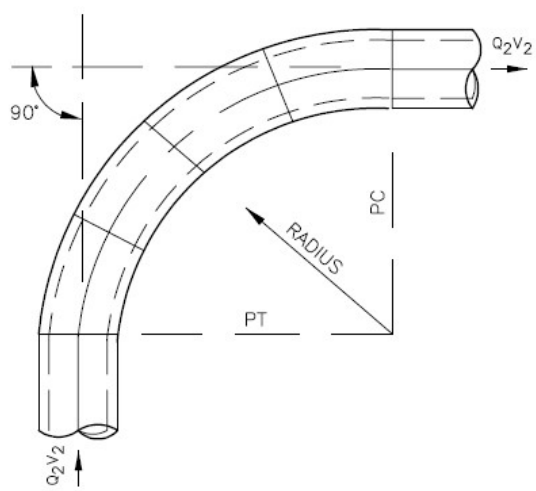

2. Junction and Manhole Losses

The loss coefficient Kb for bends at manholes is presented in Table 802. A junction occurs where one or more branch sewers enter a main sewer, usually at manholes. The hydraulic design of a junction is in effect the design of two or more transitions, one for each flow path. Allowances should be made for head loss due to the impact and junctions. The head loss for a straight through manhole or at an inlet entering the sewer is calculated from the following equation. The head loss at a junction can be calculated from:

$$HL = \frac{V2^2}{2g} - Kj \frac{V1^2}{2g}$$

where V2 is the outfall flow velocity and V1 is the inlet velocity. The loss coefficient, Kj, for various junctions is presented in Table 803.

8.3.3 Storm Sewer Outlets

When the storm sewer system discharges into the Major Drainageway System (usually an open channel), additional losses occur at the outlet in the form of expansion losses. For a headwall and no wingwalls, the loss coefficient Ke = 1.0 for a flared-end section the loss coefficient is approximately 0.5 or less.

8.3.4 Partially Full Pipe Flow

When a storm sewer is not flowing full, the sewer acts like an open channel, and the hydraulic properties can be calculated using open channel techniques (refer to Chapter 7). For convenience, charts for various pipe shapes have been developed for calculating the hydraulic properties (Figures 801, 802, 803). The data presented assumes that the friction coefficient, Manning's "n" value, does not vary throughout the depth.

8.4 Vertical Alignment

The sewer grade will be such that a minimum cover is maintained to withstand AASHTO HS-25 loading on the pipe. The minimum cover depends upon the pipe size, type and class and soil bedding condition, but will be not less than 1 foot at any point along the pipe.

The minimum clearance between storm sewer and water main, either above or below, will be 12 inches. Concrete encasement of the water line will be required for clearance of 12 inches or less.

The minimum clearance between storm sewer and sanitary sewer, either above or below, will also be 12 inches. In addition, when a sanitary sewer main lies above a storm sewer, or within 18 inches below, the sanitary sewer will have an impervious encasement or be constructed of structural sewer pipe for a minimum of 10 feet on each side of where the storm sewer crosses.

8.5 Horizontal Alignment

Storm sewer alignment may be curvilinear for pipe with diameters of 48 inches or greater but only when approved in writing by Planning & Zoning. The applicant must demonstrate the need for a curvilinear alignment. The limitations on the radius for pulled-joint pipe are dependent on the pipe length and diameter, and amount of opening permitted in the joint. The maximum allowable joint pull will be ¾ inches. The minimum parameters for radius type pipe are shown in Table 801. The radius requirements for pipe bends are dependent upon the manufacturer's specifications.

8.6 Pipe Size

The minimum allowable pipe size for storm sewers is dependent upon a practical diameter from the maintenance standpoint. The length of the sewer also affects the maintenance and, therefore, the minimum diameter. Table 801 presents the minimum pipe size for storm sewers.

8.7 Manholes

Manholes or maintenance access ports will be required whenever there is a change in size, direction, elevation, grade or where there is a junction of two or more sewers. A manhole may be required at the beginning and/or at the end of the curved section of storm sewer. The maximum spacing between manholes for various pipe sizes will be in accordance with Table 801. The required manhole size will be as follows:

Manhole Size

Sewer Diameter	Manhole Diameter
15" to 18"	4'
21" to 42"	5'
48" to 54"	6'
60" and larger	CDOT M-604-20, Page 2 of 3

Larger manhole diameters or a junction structure may be required when sewer alignments are not straight through or more than one sewer line goes through the manhole.

8.8 Checklist

To aid the designer and reviewer, the following checklist has been prepared:

1. Calculate energy grade line (EGL) and hydraulic grade line (HGL) for all sewers and show on the construction drawings or on a separate copy of the plans submitted with the construction drawings.

2. Account for all losses in the EGL calculation including outlet, form, bend, manhole and junction losses. Refer to Water Surface and Energy Grade Line Calculations for a Storm Sewer - Worksheet 801.

3. Provide adequate erosion protection at the outlet of all sewers into open channels.

4. Check for minimum pipe cover.

5. Check for adequate clearance with other utilities.

Table 801

Storm Sewer Alignment and Size Criteria

Minimum Pipe Diameter

Type	Minimum Pipe Diameter	Minimum Cross-sectional area
Main trunk	18 inch	1.77 sq. feet
Lateral from the inlet	15 inch	1.23 sq. feet

Note: Minimum size of the lateral will also be based upon a water surface inside the inlet at a minimum distance of 1 foot below the grate or throat.

Diameter of Pipe	Maximum Allowable Distance between Manholes and/or Cleanouts
15” to 36”	400 feet
42” and larger	500 feet

Minimum Radius for Radius Pipe

Diameter of Pipe	Minimum Radius of Curvature
48” to 54”	28.5 feet
57” to 72”	32.0 feet
78” to 108”	38.0 feet

Reference: Urban Storm Drainage Criteria Manual*, DRCOG, 1969*

Table 802

Energy Loss Coefficients - Bends at Manholes

Reference: Modern Sewer Design, *AISI, Washington D.C., 1980*

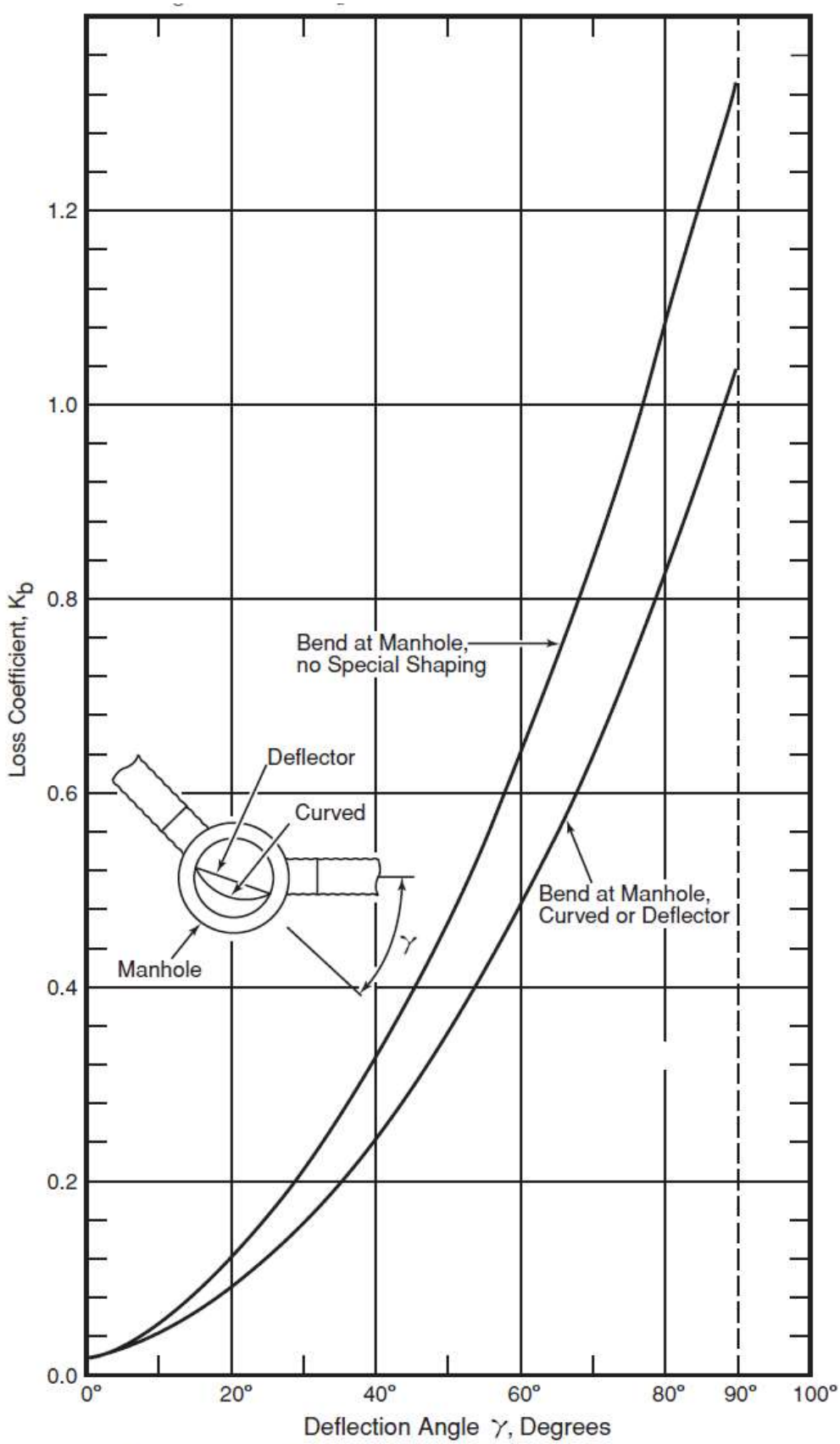

Note: Head loss applied at outlet of manhole.

Table 803

Manhole and Junction Losses

Reference: APWA Special Report No. 49*, 1981*

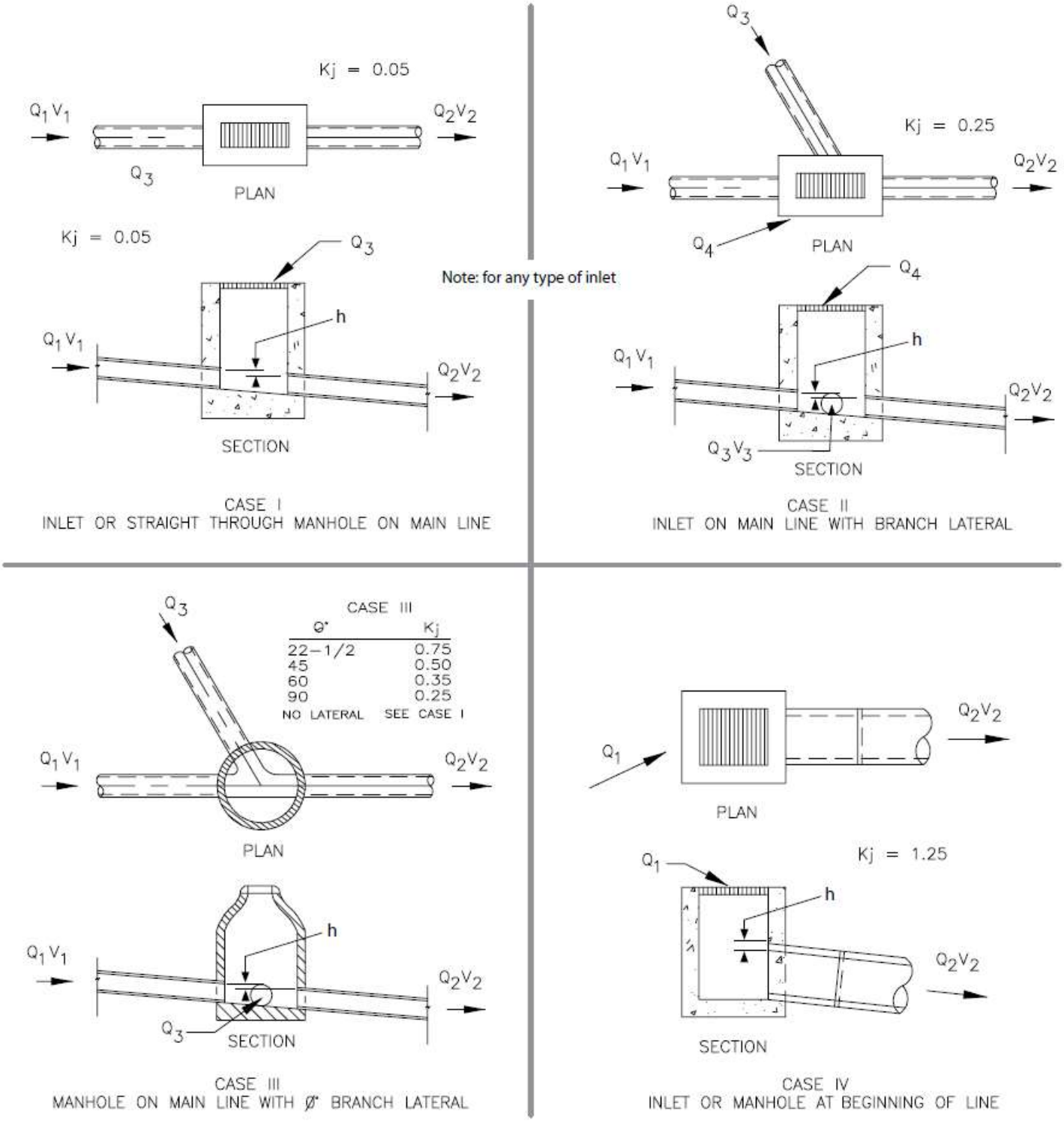

Figure - 801

Hydraulic Properties of Circular Pipe
Reference: Concrete Pipe Design Manual *ACPA, 1970*

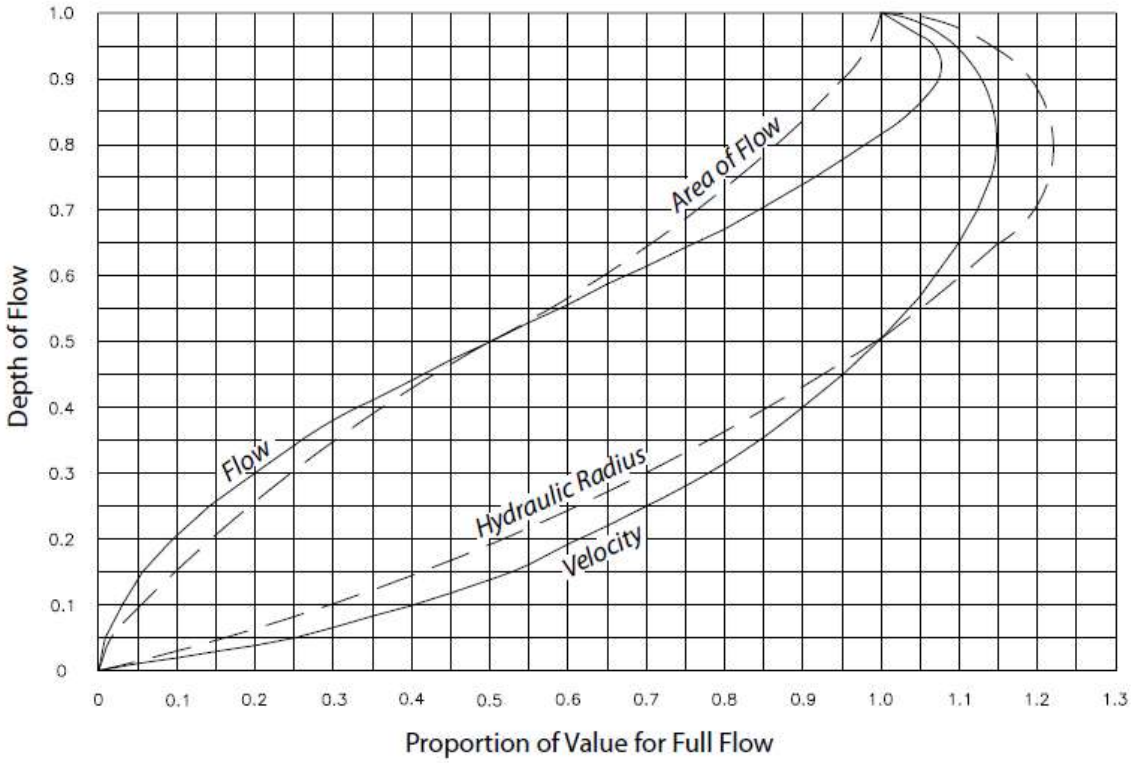

Figure 802

Hydraulic Properties Horizontal Elliptical Pipe
Reference: Concrete Pipe Design Manual *ACPA, 1970*

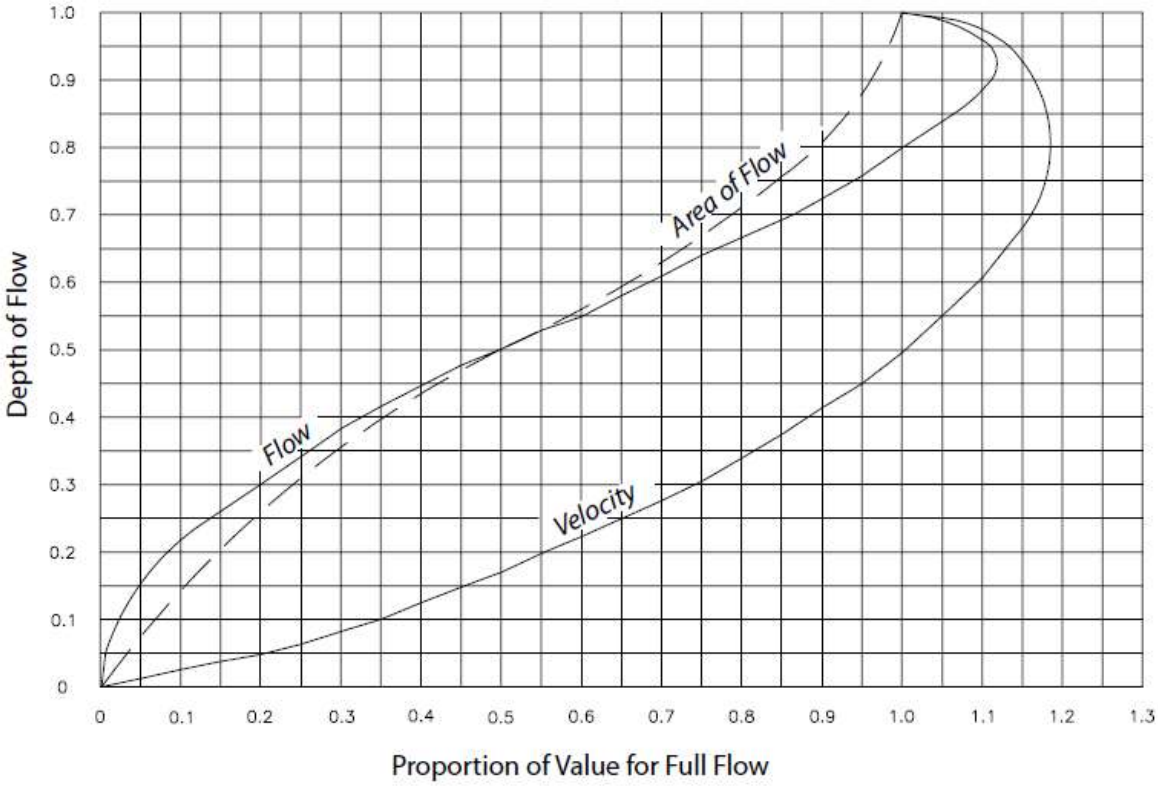

Figure 803

Hydraulic Properties of Arch Pipe

Reference: Concrete Pipe Design Manual *ACPA, 1970*

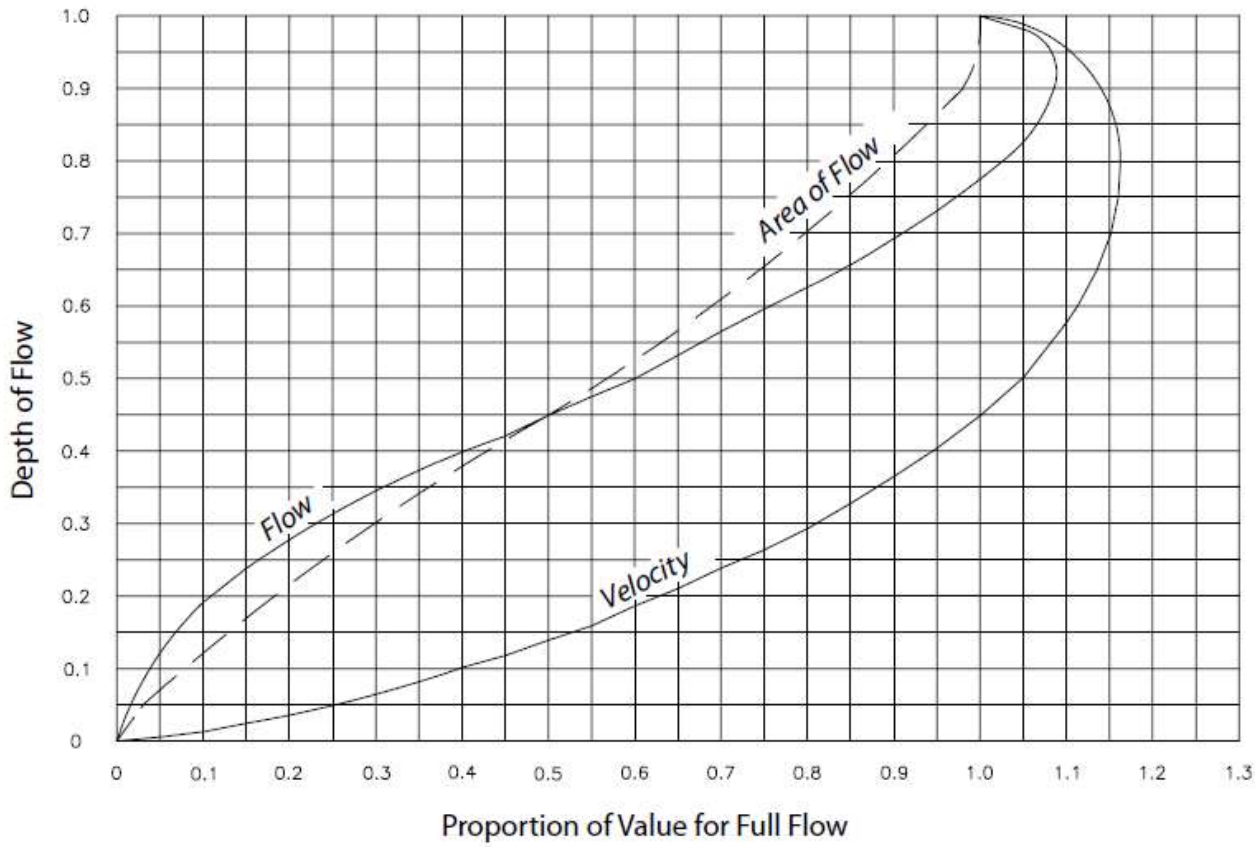

Worksheet 801

Water Surface and Energy Grade Line Calculations for a Storm Sewer

Pipe Material_____

Manning's n_____

Station	Invert	Pipe Dia.	W.S. Elev.	Pipe Shape	Area	¢	Velocity	Flow Rate	H_v	Energy Grade Line	S_f	Avg. S_f	Length	H_f	H_b	H_j	H_m	H_t	Total Loss
	(ft)	(in)	(ft)		(ft^2)		(fps)	(cfs)	(ft)	(ft)			(ft)	(ft)	(ft)	(ft)	(ft)	(ft)	(ft)

$¢ = (2g(n^2))$ $S_f = (¢H_v)$

2.21 $R^{1.33}$

Chapter 9 - Storm Sewer Inlets

9.1

There are four types of inlets: curb opening, grated, combination and slotted inlets. Inlets are further classified as being on a continuous grade or in a sump. The term “continuous grade” refers to an inlet so located that the grade of the street has a continuous slope past the inlet and, therefore, ponding does not occur at the inlet. The sump condition exists whenever water is restricted or ponds because the inlet is located at a low point. A sump condition can occur at a change in grade of the street from positive to negative, or at an intersection due to the crown slope of a cross street.

Presented in this chapter are the criteria and methodology for design and evaluation of storm sewer inlets in the County. Except as modified herein, all storm sewer inlet criteria will be in accordance with the *Manual*. A number of Excel-based workbook tools are offered by UDFCD on their website (www.UDFCD.org).

9.2 Standard Inlets

The standard inlets permitted for use in the County are:

Table 901

Standard Inlets

Inlet Type	Standard Detail	Permitted Use
Curb Opening Inlet Type R	Standard M-604-12 SD-1 (In *Criteria*)	All street types
Grated Inlet Type C	CDOT M-604-10	All streets/roads with a roadside or median ditch
Grated Inlet Type 13	CDOT M-604-13	Private drives, alleys or parking areas
Combination Inlet Type 13	SD-2 (In *Criteria*)	All street types
Slotted Inlet	Provide Manufacturer’s Specifications	Private drives, alleys or parking areas
Median Inlet	SD-3 (In *Criteria*)	In medians

9.3 Inlet Hydraulics

The procedures and basic data used to define the capacities of the standard inlets under various flow conditions were obtained from the *Manual*, “Streets/Inlets/Storm Sewers”. The procedure consists of defining the amount and depth of flow in the gutter, selecting the appropriate inlet type and determining the theoretical flow interception by the inlet. To account for effects which decrease the capacity of the various types of inlets, such as debris plugging, pavement overlaying and variations in design assumptions, the theoretical capacity calculated for the inlets is reduced to the allowed capacity by applying a clogging factor.

9.4 Inlet Spacing

The optimum spacing of storm inlets is dependent upon several factors including traffic requirements, contributing land use, street slope and distance to the nearest outfall system. The suggested sizing and spacing of the inlets is based upon the interception rate of 70% to 80%. This spacing has been found to be more efficient than a spacing using 100% interception rate. Using the suggested spacing only, the most downstream inlet in a development would be designed to intercept 100% of the flow. Also, considerable improvements in over-all inlet system efficiency can be achieved if the inlets are located in the sumps created by street intersections.

9.5 Inlet Capacity

The hydraulic capacity of an inlet is dependent on the type of inlet and the location (on a continuous grade or in a sump).

For the continuous grade condition, the capacity of the inlet is dependent upon many factors including gutter slope, depth of flow in the gutter, height and length of curb opening, street cross slope and the amount of depression at the inlet. In addition, all of the gutter flow will not be intercepted and some flow will continue past the inlet area (inlet carryover). The amount of carryover must be included in the drainage facility evaluation as well as in the design of the inlet (see Figure 901 for example).

The capacity of the inlet in a sump condition is dependent on the inlet geometry and the depth of ponding above the inlet.

1. Use the Urban Drainage workbook tool (most current versions) to calculate the selected inlet capacity.
2. Calculate design peak flow, including local peak flow and carryover flow, if applicable.
3. Determine street/gutter geometry:

(a) Allowable depth to gutter flowline, H

(b) Gutter width, W

(c) Gutter depression, a

(d) Street transverse slope, s_x

(e) Street longitudinal slope, s_o

(f) Manning's roughness, n (0.016)

(g) Maximum water spread, T

4. Determine inlet geometry:

(a) Inlet type

(b) Length of a single unit, L_O (5.00' for Type R, 3.27' for Type 13, 3.27' for combination)

(c) Width of a grate, W_O (n/a for Type R, 1.88' for Type 13,1.88' for combination)

(d) Height of curb opening, H (6" for Type R, n/a for Type 13, 6" for combination)

(e) Local depression, a_{local} (3" for Type R, 0" Type 13, 2" for combination)

(f) Angle of throat, theta (63.4^0 for Type R, n/a for Type 13, 90^0 for combination)

(g) Side width for depression pan, W_P (3.00' for Type R, n/a for Type 13, 2.00' for combination)

(h) Number of units, N_O

5. Determine inlet design coefficients, as applicable

(a) Clogging factor for a grate, C_0-G (0.5)

(b) Clogging factor for a curb opening, C_0-C (0.1)

(c) Clogging factor for a slotted inlet, C_0 (0.5)

(d) Area opening ratio for a grate, A (0.6)

(e) Grate orifice coefficient, C_d-G (0.67)

(f) Grate weir coefficient, C_w-G (3.00)

(g) Curb opening orifice coefficient, C_d-C (0.67)

(h) Curb opening weir coefficient, C_w-C (2.30)

(i) Slotted inlet orifice coefficient, C_d-S (0.80)

(j) Slotted inlet weir coefficient, C_w-S (2.48)

Figure 901
Inlet Design Example - Minor Storm

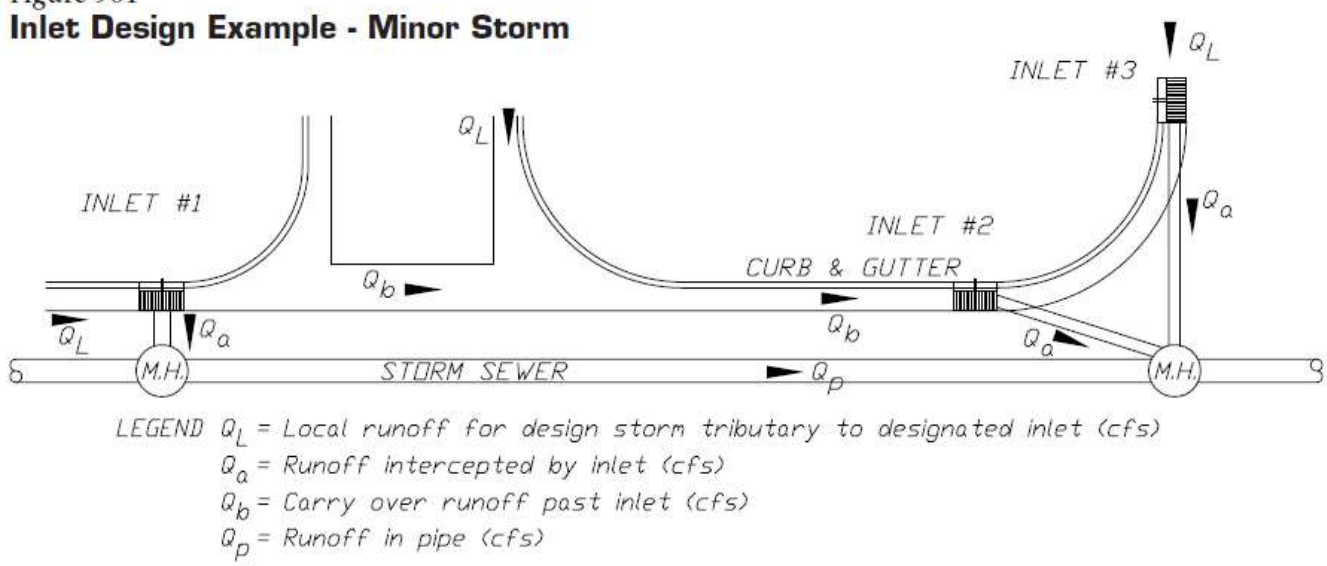

Chapter 10 – Streets/Roads

10.1 Introduction

The criteria presented in this chapter will be used in the evaluation of the allowable drainage encroachment within streets/roads. The review of all submittals will be based on the criteria herein and the Manual, "Street, Inlets and Storm Drain" chapter. A number of Excel-based workbook tools are offered by UDFCD on their website (www.UDFCD.org).

10.2 Function of Streets/Roads in the Drainage System

Streets and roads, specifically the curb and gutter or the street/roadside ditches, are part of the Minor Drainage System. When the drainage in the street/road exceeds allowable limits, a storm sewer system (Chapter 9) or an open channel (Chapter 7) is required to convey the excess flows. The streets/roads are also part of the Major Drainage System when they carry floods in excess of the minor storm also subject to certain limitations. However, the primary function of streets/roads is for traffic movement and, therefore, the drainage function is subservient and must not interfere with the traffic function of the street/road.

Design criteria for the collection and moving of runoff water on streets/roads is based on a reasonable frequency and magnitude of traffic interference. That is, depending on the character of the street/road, certain traffic lanes can be fully inundated once during the minor design storm return period. However, during lesser intense storms, runoff will also inundate traffic lanes but to a lesser degree. The primary function of the streets/roads for the Minor Drainage System is therefore to convey the nuisance flows quickly and efficiently to the storm sewer or open channel drainage without interference with traffic movement. For the Major Drainage System, the function of the streets/roads is to provide an emergency passageway for the flood flows with minimal damage.

10.3 The Allowable Use of Streets/Roads as a Drainage System

The streets in the County are classified as arterial/parkway, collector and local, according to the average daily traffic (ADT) for which the street is designed. The larger the ADT, the more restrictive the allowable drainage encroachment into the driving lanes. The limits of storm runoff encroachment for each classification is shown in the following tables:

Table 1001

Allowable Use of Streets/Roads for Minor Storm Runoff

Street/Road Classification	Maximum Allowable Street/Road Encroachment
Major Collector/Arterial/Parkway	No curb overtopping. Flow spread must leave at least two 10-foot lanes free of water, 10 feet each side of the street/road crown/median.
Collector	No curb overtopping. Flow spread must leave at least one 10-foot lane free of water, 5 feet either side of the street/road crown.
Local	No curb overtopping for 6-inch vertical curb. Flow may spread to the back of sidewalk for a combination curb, gutter and sidewalk.

Table 1002

Allowable Use of Streets/Roads for Major Storm Runoff

Street/Road Classification	Maximum Allowable Street/Road Encroachment
Major Collector/Arterial/Parkway	Flow may spread to the back of sidewalk or to the top of curb if there is no sidewalk. To allow for emergency vehicles, the depth of water will not exceed 6 inches at the street crown or 12 inches at the gutter flowline whichever is more restrictive.
Local/Collector	Flow may spread to the back of sidewalk or to the top of curb if there is no sidewalk. The depth of water at the gutter flowline will not exceed maximum allowable depth or 12 inches.

Table 1003

Allowable Flow Depths for Standard Street Templates

The allowable flow depths presented in this table are based on the maximum allowable encroachment in Tables 1001 and 1002 and the standard templates. Allowable flow depths must be calculated for any modifications to the standard templates.

Street Classification	Allowable Minor Storm Flow Depth	Allowable Major Storm Flow Depth
Principal Arterial or Parkway (94' Flowline to Flowline with raised median)	6"	9.4"
Principal Arterial or Parkway (94' Flowline to Flowline without raised median)	6"	9.4"
Minor Arterial (70' Flowline to Flowline with raised median)	5.4"	9.4"
Minor Arterial (70' Flowline to Flowline without raised median)	6"	9.4"

Major Collector (49 feet flowline to flowline with raised median)	6"	9.4”
Major Collector (49’ feet flowline to flowline without raised median)	6"	9.4”
Collector (with detached sidewalk)	4.7”	8.4”
Collector (with attached sidewalk)	4.7”	7.1”
Local (34’ Flowline to Flowline, 6” vertical curb and detached sidewalk)	6”	8.4”
Local (34’ Flowline to Flowline, combination curb, gutter, sidewalk)	5”	5”
Local (28’ Flowline to Flowline, vertical curb and detached sidewalk)	6”	8.4”
Local (28’ Flowline to Flowline, combination curb, gutter, sidewalk)	5”	5”

Table 1004

Allowable Cross Street Flow

Street/Road Classification	Minor Drainage System Maximum Depth	Major Drainage System Maximum Depth
Major Collector/Arterial/Parkway	None	None
Collector	None	12" depth at gutter flowline or edge of pavement if no gutter
Local	6" depth in *cross pan or gutter flowline	12" depth at gutter flowline or edge of pavement if no gutter

**Cross-pans are prohibited on arterial streets/roads. Cross-pans are allowed on collector and local streets/roads only at locations where traffic stops are intended at intersections and no storm sewer is present.*

Table 1005

Allowable Culvert Overtopping

Street/Road Classification	Minor Drainage System Maximum Depth	Major Drainage System Maximum Depth*
Major Collector/Arterial/Parkway	None	None. Minimum clearance between the low chord or culvert crown and the energy grade line is 6 inches for basins less than 2 square miles, 1 foot for basins up to 10 square miles and 2 feet for basins greater than 10 square miles.
Collector/Local/Driveway	None	12" depth at gutter flowline or edge of pavement if no gutter. The maximum headwater depth is 1.5 times the culvert height.
Local Mountains/ Driveway Mountains	None	Overtopping depth for the 100-year storm event is 12” unless approved by Planning and Zoning

**The regulations set forth in the ZR, also apply for culvert crossings that are within the Floodplain Overlay District.*

10.4 Hydraulic Evaluation

10.4.1. Allowable Gutter Capacity

The allowable gutter capacity is calculated using the modified Manning’s formula. This equation is the basis of the UD-Inlet spreadsheet.

$Q = R(0.56)(Z/n)S^{1/2} d^{8/3})$

Where

Q = discharge in cfs

$Z = 1/S_x$, where S_x is the street transverse slope(ft/ft)

d = depth of water at face of curb (feet)

S_o = street longitudinal slope(ft/ft)

n = Manning’s roughness coefficient

R = reduction factor (*Manual*, Figure ST-2)

A Manning's n-value of 0.016 will be used for the calculations at all street slopes. The allowable gutter capacity is computed by multiplying the theoretical street capacity by the appropriate reduction factor. The purpose of the reduction factor is for public safety.

The allowable gutter capacity will need to be reduced for non-symmetrical street sections. Street capacity calculations will be submitted to the County at critical locations of the non-symmetrical streets.

10.4.2 Street/Road with Roadside Ditches

Some streets/roads are characterized by street/roadside ditches rather than curbs and gutters. The capacity is limited by the depth in the ditch and the maximum flow velocity. Refer to Section 7.6 for the design and capacity of street/roadside ditches.

Chapter 11 – Culverts

11.1 Introduction

A culvert is defined as a conduit for the passage of surface water under a, street/road, driveway, railroad, canal or other embankment (except detention outlets). Culvert design involves both hydraulic and structural design considerations. This chapter sets forth only the hydraulic aspects of culvert design.

Culverts may be constructed with many shapes and materials. The most commonly used shape is circular. Other shapes include elliptical, arch and box. The most common culvert materials are concrete and steel. The material selected for a culvert is dependent upon factors such as durability, strength, roughness, bedding, water-tightness and abrasion and corrosion resistance.

11.2 Culvert Hydraulics

The procedures and basic data to be used for the hydraulic evaluation of culverts in the County will be in accordance with the *Manual*, "Culverts," except as modified herein. The reader is also referred to the many texts covering the subject for additional information.

11.3 Culvert Design Standards

11.3.1 Construction Material and Pipe Size

Within the County ROW, culverts will be constructed from corrugated steel or concrete. Other materials for construction outside of County ROW will be subject to approval by Planning and Zoning.

The minimum pipe size for culverts within a public ROW will be 18 inches diameter round culvert or will have a minimum cross-sectional area of 1.6 ft2 for arch shapes. Driveway culverts will be sized to pass the minor storm ditch flow capacity without overtopping the driveway. The minimum size culvert will be an 18" x 11" CSPA (15" equivalent round pipe) with flared end sections. Larger sizes may be required by Planning and Zoning as determined by the required culvert capacity calculations. Culverts crossing a drainageway will be sized to pass a 10-year storm without street overtopping. Using future developed conditions for the 100-year runoff, the allowable street overtopping will be determined based on Table 1005.

11.3.2 Inlet and Outlet Configuration

Within the County, all culverts for drainageways are to be designed with headwalls or with flared-end sections at the inlet. Flared-end sections are only allowed on corrugated steel pipes with diameters of 42-inches (or equivalent) or less. No multiple barrel installations will be allowed unless warranted by special conditions as approved by Planning and Zoning.

Headwalls, wingwalls and flared-end sections should be designed and constructed to use the existing landforms of the site and blend with the natural landscape.

Additional protection in the form of riprap will also be required at the outlet due to the potential scouring velocities. Refer to Section 12.2.

11.3.3 Hydraulic Data

When evaluating the capacity of a culvert, the following data will be used:

a. Roughness Coefficient - Table 1101.

b. Entrance Loss Coefficients - Table 1101.

c. Capacity Curves - There are many charts, tables and curves in the literature for the computation of culvert hydraulic capacity. To assist in the review of the culvert design computations and to obtain uniformity of analysis, one of the following design aids will be used:

Urban Storm Drainage Criteria Manual, Denver, Colorado, latest revision

HY8 Culvert Analysis Version 6.1, U.S. Federal Highway Administration, Washington, D.C.

d. Design Forms - Standard Form SF-3 is to be used for determining culvert capacities. A sample computation is discussed in Section 11.4 and shown on Table 1102.

11.3.4 Velocity Considerations

In design of culverts, both the minimum and maximum velocities must be considered. A minimum velocity of flow is required to assure a self-cleansing condition of the culvert. A minimum velocity in the culvert of 3-fps at the outlet is recommended.

The maximum velocity is dictated by the channel conditions at the outlet. If the outlet velocities are less than 7-fps for grassed channels, then the minimum amount of protection is required due to the eddy currents generated by the flow transition. Higher outlet velocities will require substantially more protection. A maximum outlet velocity of 12-fps is recommended with erosion protection. If the culvert outlet velocity is greater than 12-fps, an energy dissipator will be required. Refer to Sections-12.2 for protection requirements at culvert outlet.

11.3.6 Cross Culvert Location

The surface drainage in a street/roadside ditch will not be carried in excess of 500 feet before being discharged into a natural drainageway. Grade changes of greater than 2% will require a cross culvert. The final location of culverts will be determined by existing field conditions encountered during installation. Culverts will be installed at the slope of the natural terrain.

11.3.7 Structural Design

As a minimum, all culverts will be designed to withstand an HS-25 loading (unless otherwise approved by Planning & Zoning) in accordance with the design procedures of AASHTO, “Standard Specifications for Highway Bridges,” and with the pipe manufacturer’s recommendation.

11.3.8 Trashracks

Trashracks may be required at the entrance of culverts for some installations as loading (unless otherwise approved by Planning & Zoning), such as areas with potential for significant debris, or in areas where public access is likely. Installation of trashracks prevents debris from entering culverts.

The following criteria will be used for design of trashracks for storm drainage applications:

1. Materials

All trashracks will be constructed with smooth steel pipe with a minimum 1.25 inches outside diameter. The trashrack ends and bracing should be constructed with steel angle sections. All trashrack components will have a corrosion protective finish.

2. Trashrack Design

The trashracks will be constructed without cross-braces (if possible) in order to minimize debris clogging. The trashrack will be designed to withstand the full hydraulic load of a completely plugged trashrack based on the highest anticipated depth of ponding at the trashrack. The trashrack will also be hinged and removable for maintenance purposes. The clear opening at the bottom should be 9 to 12 inches to permit debris at low flow to go through.

3. Bar Spacing

The steel pipe bars will be spaced with a clear opening of 4 ½ to 5 inches. In addition, the entire rack will have a minimum clear opening area (normal to the rack) at the design flow depth of four times the culvert opening area.

4. Trashrack Slope

The trashrack will have a longitudinal slope of no steeper than 3 horizontal to 1 vertical for maintenance purposes.

5. Hydraulics

Hydraulic losses through trashracks will be computed using the following equation:

$H_T = 0.11\ (TV/D)2(\text{Sin } A)$

where:

H_T = Head Loss through Trashrack (feet)

T = Thickness of Trashrack Bar (inches)

V = Velocity Normal to Trashrack (fps)

D = Center-to-Center Spacing of Bars (inches)

A = Angle of Inclination of Rack with Horizontal

This equation will apply to all racks constructed normal to the approach flow direction. The velocity normal to the trashrack will be computed considering the rack to be 50 percent plugged.

This equation is a modification of the equation presented in *Design Standards No. 3 - Canals and Related Structures*, U.S. Department of the Interior, Bureau of Reclamation, Denver, Colorado. The modification consists of changing the computed head loss from inches to feet and eliminating the factor which accounts for approach flow directions other than normal to the trashrack.

Safety Grates will be required when it is not possible to "see daylight" from one end of the culvert to the other, the culvert is less than 42 inches in diameter, or conditions within the culvert (bends, obstructions, vertical drops) or at the outlet are likely to trap or injure a person.

11.4 Design Example

The procedure recommended to evaluate existing and proposed culverts is based on the procedures presented in HEC-5, *Hydraulic Charts for the Selection of Highway Culverts* HEC No. 5, USDOT, FHWA. The methodology consists of evaluating the culvert headwater requirements, assuming both inlet control and outlet control. The rating which results in the larger headwater requirements is the governing flow condition.

A sample calculation for rating an existing culvert is presented in Table 1102. The required data are as follows:

Culvert size, length and type (48" CMP, L = 150', n = .024).

Inlet, outlet elevation and slope (5540.0, 5535.5, so = 0.030).

Inlet treatment (flared end-section).

Low point elevation of embankment (EL = 5551.9).

Tailwater rating curve (see Table 1102, Column 5).

From the above data, the entrance loss coefficient, K2, and the n-value are determined. The full flow Q and the velocity are calculated for comparison. The rating then proceeds in the following sequence:

Step 1: Headwater values are selected and entered in column 3. The headwater to pipe diameter ratio (Hw/D) is calculated and entered in column 2. If the culvert is other than circular, the height of the culvert is used.

Step 2: For the Hw/D ratios, the culvert capacity is read from the rating curves (Section-11.3.3) and entered into column 1. This completes the inlet condition rating.

Step 3: For outlet condition, the Q values in column 1 are used to determine the head values (H) in column 4 from the appropriate outlet rating curves (Section-11.3.3).

Step 4: The tailwater depths (Tw) are entered into column 5 for the corresponding Q values in column 1 according to the tailwater rating curve (i.e., downstream channel rating computations). If the tailwater depth (Tw) is less than the diameter of the culvert (D), column 6 and 7 are to be calculated (go to Step 5). If Tw is more than D, the tailwater values in column 5 are entered into column 8 for the ho values

and proceed to Step 6.

Step 5: The critical depth (dc) for the corresponding Q values in column 1 are entered into column 6. The average of the critical depth and the culvert diameter is calculated and entered into column 7 as the h_o values.

Step 6: The headwater values (H_w) are calculated according to the equation:

$$H_w = H + h_o - LS_o$$

where H is from column 4, and h_o is from column 8 (for Tw>D) or the larger value between column 5 and column 7 (for Tw<D). The values are entered into column 9.

Step 7: The final step is to compare the headwater requirements (columns 9 and 3) and to record the higher of the two values in column 10. The type of control is recorded in column 11, depending upon which case gives the higher headwater requirements. The headwater elevation is calculated by adding the controlling Hw (column 10) to the upstream invert elevation. A culvert rating curve can then be plotted from the values in columns 12 and 1.

To size a culvert crossing, the same form can be used with some variations in the basic procedures. First, a design capacity is selected and the maximum allowable headwater is determined. An inlet type (i.e., headwall) is selected, and the invert elevations and culvert slope are estimated based upon site constraints. A culvert type is then selected and first rated for inlet control and then for outlet control. If the controlling headwater exceeds the maximum allowable headwater, a different culvert configuration is selected and the procedure repeated until the desired results are achieved.

11.5 Culvert Sizing Criteria

11..5.1 Culverts within Drainageways

The sizing of a culvert is dependent upon two factors, the street classification and the allowable street overtopping. The allowable street overtopping for the various street classifications is set forth in Section 10.3. In addition to this policy, a criteria requiring that no street overtopping occur for a 10-year frequency storm has been established. Therefore, as a minimum design standard for street crossings, the following procedure will be used:

1. Using the future developed conditions 100-year runoff, the allowable street overtopping will be determined from overflow rating curves developed from the street profile crossing the waterway.

2. The culvert is then sized for the difference between the 100-year runoff and the allowable overtopping.

3. If the resulting culvert is smaller than that required to pass the 10-year flood peak without overtopping, the culvert will be increased in size to pass the 10-year flow.

The CRITERIA is considered a minimum design standard and must be modified where other factors are considered more important. For instance, if the procedure still results in certain structures remaining in the 100-year floodplain, the design frequency may be increased to lower the floodplain elevation. Also, if only a small increase in culvert size is required to prevent overtopping, then the larger culvert is recommended.

11..5.2. Cross Culverts and Driveway Culverts within Street/Roadside Ditches

Minimum sizing of culverts is delineated in Section 11.6 of these CRITERIA. As a minimum, cross culverts and driveway culverts shall be designed to accommodate the ditch capacity.

11.6 Checklist

To aid the designer and reviewer, the following checklist has been prepared:

1. Minimum culvert size within the public ROW, such as cross tubes, is 18-inch diameter round or equivalent for other shapes.

2. Minimum culvert size for street/roadside ditches at driveways is 15-inch diameter round or equivalent for other shapes.

3. Headwalls, wingwalls or flared end sections required for all culverts in accordance with these CRITERIA.

4. Check outlet velocity and provide adequate protection.

5. Check structural requirements.

Table 1101

Hydraulic Data for Culverts

Pipe Roughness Coefficients

Manning's n-value	
Sewer Type	Capacity Calculation
RCP	0.015
CSP	0.026
HDPE/HP	0.012

(D) Culvert Entrance Losses

	Type of Entrance	Entrance Coefficient, Ke
Pipe		
	Headwall	
	Grooved edge	0.20
	Rounded Edge (0.15D radius)	0.15
	Rounded edge (0.25D radius)	0.10
	Square edge (cut concrete and CMP)	0.40
	Headwall & 45° Wingwall	
	Grooved edge	0.20
	Square edge	0.35
	Headwall with Parallel Wingwalls Spaced 1.25D apart	
	Grooved edge	0.30
	Square edge	0.40
	Projecting entrance	
	Grooved edge RCP	0.25
	Square edge RCP	0.50
	Sharp edge, thin wall CMP	0.90
	Flared-end Section	0.50
Box, Reinforced Concrete		
	Headwall Parallel to Embankment (no wingwalls)	
	Square edge of 3 edges	0.50
	Rounded on 3 edges to radius of 1/12 barrel dimension	0.20
	Wingwalls at 30° to 75° to barrel	
	Square edged at crown	0.40
	Crown edge rounded to radius of 1/12 barrel dimension	0.20
	Wingwalls at 10° to 30° to barrel	
	Square edged at crown	0.50
	Wingwalls parallel (extension of sides)	
	Square edged at crown	0.70

Note: The entrance loss coefficients are used to evaluate the culvert or sewer capacity operating under outlet control.

Reference: Handbook of Steel Drainage and Highway Construction Products*, AISI 1991*

Table 1102

Standard Form SF-3 Culvert Rating

Project: *Design Example* **Location:** *Jefferson County* **Station:** *2+00*

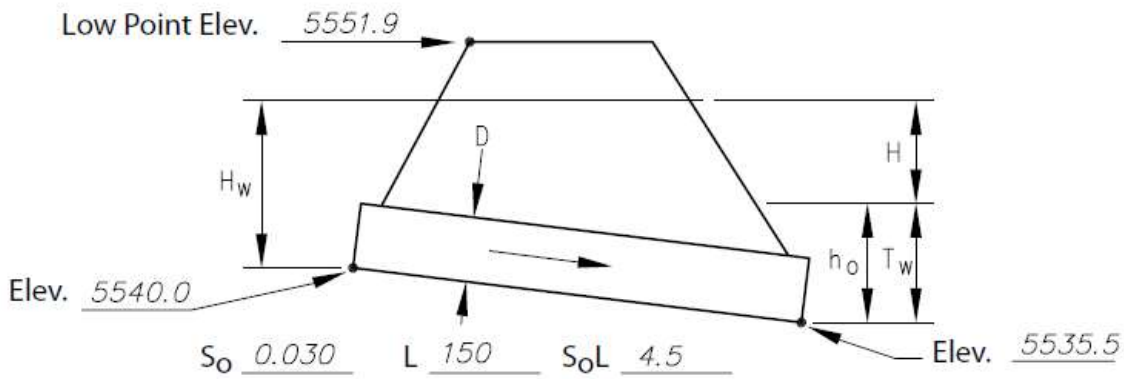

Culvert Data

Type: 48" CMP n: 0.024

Inlet: Flared End Section Q_{Full}: 13.5

K_e 0.5 K_{Full}: 10.7

Outlet Control Equations

1. $H_w = H + h_o - LS_o$
2. For $T_w < D$, $h_o = \frac{d_c + D}{2}$ or T_w (whichever is greater)
3. For box culvert: $d = 0.315(Q/B)^{2/3} \leq D$
   (for any other shapes see HEC-5)

	Inlet Control		Outlet Control						Cont.	Control	Elev.
					$T_o < D$		$T_o > D$				
Q	$\frac{H_c}{D}$	H_w	H	T_w	D_c	$\frac{D_c + D}{2} = h_o$	H_o	H_w	H_w		
1	2	3	4	5	6	7	8	9	10	11	12
70	1.0	4	1.9	1.5	2.5	3.3		0.7	4	Inlet	5544.0
115	1.5	6	5.5	2.0	3.0	3.5		4.5	6	Inlet	5546.0
145	2.0(3)	8	8.9	2.5	3.4	3.7		8.1	8.1	Outlet	5548.8
170(1)	2.5(3)	10	12.5	3.0	3.7	3.9		11.9	11.9	Outlet	5551.9
195(2)	3.0(3)	12	16.0	3.5	4.0	4.0		15.5	15.5	Outlet	5555.5

Outlet Velocity, V = Q/A = 170 cfs/12.8 ft.^{2} = 13.5 fps

Notes:

(1) Culvert capacity
(2) Road overtopping
(3) Example only

Chapter 12 - Hydraulic Structures

12.1 Introduction

Hydraulic structures are used in storm drainage work to control the flow of the runoff. The energy associated with flowing water has the potential to create damage to the drainage works, especially in the form of erosion. Hydraulic structures, which include Conduit Outlet Structures, energy dissipators, check structures, bridges and irrigation ditch crossings, all control the energy and minimize the damage potential of storm runoff.

The criteria to be used in the design of hydraulic structures will be in accordance with the *Manual*. The specific criteria to be used with the modifications for the County are presented herein.

12.2 Conduit Outlet Structures

Outlet protection designed for the 100 year storm event is required for all storm-sewer and culvert locations. The design of Conduit Outlet Structures will be in accordance with the *Manual*.

12.3 Channel Grade Control Structures (Check and Drop Structures)

As discussed in chapter, “Open Channels,” there is a maximum permissible velocity for major design storm runoff in grass lined channels. One of the more common methods of controlling the flow velocity is to reduce the channel invert slope, which requires a check drop to make up for the elevation difference occurring when the channel slope is reduced.

The design criteria for the check and drop structures will be in accordance with the *Manual*.

12.4 Bridges

The design of bridges within the County will be in accordance with the *Manual*. The design capacity of the bridge will be determined by the method presented in Section 11.5 of these *CRITERIA*.

12.5 Irrigation Ditch Crossings

Any proposed development in the vicinity of the ditches or canals that crosses or utilizes the canal for surface drainage or proposes to make any modifications to the existing topography which alters and/or affects water quality and drainage patterns to the ditch will have the plans approved by the ditch company prior to approval by the County.

Chapter 13 - Stormwater Quality Management

13.1 Introduction

The intent of this Chapter is to present minimum criteria for the implementation and use of BMPs in order to achieve the goal of mitigated stormwater quality during construction and after construction. Compliance with these *CRITERIA* does not require water quality monitoring by the individual developer, or quantitative descriptions of pollutant load removal. Instead, a performance-based approach is required for erosion, sediment and pollutant transport control. Individual methods must be selected and implemented to best fit the conditions and requirements of each site.

The quality of stormwater runoff from developed lands and urbanized areas can be impacted by some or all of the sources and pollutants shown in Table 1301. Stormwater quality control methods and techniques have been developed for two distinct phases of urbanization: the initial construction period of land disturbing activities and the ongoing response of the urban system to rainfall and runoff events. Site planning and engineering for developing lands must provide controls for both phases of urbanization. The general objectives for each of these two phases of urbanization are discussed in this chapter.

Table 1301

Possible Sources of Pollutants in Stormwater

Source	Contaminant
Vehicles, Machinery and Industrial Activities	Metals, Lubricants, Solvents, Paints
Lawn Care, Gardening	Pesticides, Herbicides, Fertilizers, Sediments
Household Chemicals	Paints, Solvents, Detergents, Disinfectants, Cleaners, Chlorine
General Population	Litter, Trash, Debris
Pets and Animals	Fecal Matter, Organic Wastes
Parking Lots	Oil, Grease, Automotive Fluids, Sediments
Construction	Soil and Sediment Particles

13.2 Temporary Erosion Control for Construction Activities

Construction activities that disturb the natural soil and vegetation have the potential to increase soil erosion and sediment movement. The disturbed, loose soil is easily eroded by the forces of rainfall, concentrated runoff and wind.

Erosion and sediment control practices are required, to the maximum extent practicable, on all developing sites. These practices are required to prevent disturbed soils from leaving the site and to maintain stormwater quality at a level comparable to the historic runoff conditions that existed prior to the construction activities.

Site planning and design must meet all of the objectives for stormwater quality control. Design and performance information for a variety of erosion and sediment control measures that are currently in practice or recommended for use in the region is presented in detail in the *Manual*.

The Land Disturbance Section of the ZR describes the submittal requirements and specifications for grading and erosion control plans and the minimum performance standards for site grading and erosion and sediment control.

13.3 Permanent Controls for Stormwater Quality Management

13.3.1 Objectives for Permanent Stormwater Quality Control

Jefferson County requires that land undergoing development activities incorporate BMPs to achieve the objectives of permanent stormwater quality control. The following principles and objectives of stormwater quality BMPs will be used by the County to determine if adequate controls have been proposed during the site design and development process:

Minimize, to the maximum extent practicable, impacts of stormwater on receiving waters. An effective level of urban pollutant removal should be accomplished by the selected BMPs.

The site's physical constraints need to be considered. Select and design BMPs to work within the conditions on the site.

Economic impacts of the selected BMPs must be considered. Controls must be evaluated for installation (construction) costs and for future operation and/or maintenance costs.

Multi-use benefits should be incorporated within stormwater quality features whenever possible. Land intensive BMPs, such as detention/retention ponds and vegetative strips should be designed to incorporate recreational and aesthetic features such as open space and landscape values whenever possible.

Opportunities for participation in master-planned regional facilities have been considered. The County will be contacted to determine if regional facilities for stormwater quality control may be available to the planned site.

13.3.2 BMPs for Permanent Control

The Four-Step Process described in the *Manual*, is required for selecting structural BMPs in developing areas. Selection of a BMP must include consideration of long-term function and maintenance design expectations, an estimate of annual maintenance costs and maintenance schedule, the source of funding and anticipated life of the structural BMP.

Step 1. Employ Runoff Reduction Practices

To reduce runoff peaks and volumes from urbanizing areas, employ a practice generally termed "minimizing directly connected impervious areas" (MDCIA). The principal behind MDCIA is twofold – to reduce impervious areas and to route runoff from impervious surfaces over grassy areas to slow down runoff and promote infiltration. The benefits are less runoff, less stormwater pollution and less cost for drainage infrastructure.

a. Reduce "Actual" Impervious Area

- Replace regular pavement with permeable interlocking concrete pavement (PICP) and reinforced grass pavement.
- Replace storm sewer or hard surface swales with grass swales

b. Reduce "Effective" Impervious Area

- Direct runoff from impervious surfaces to grass buffers or grass swales
- Replace curb and gutter with grass swales
- Direct stormwater from parking lot(s) into an infiltration and/or water quality BMP prior to conveyance to the stormwater detention and water quality pond

Step 2. Provide Water Quality Capture Volume (WQCV)

A fundamental requirement for any site addressing stormwater quality is to provide WQCV. One or more of the many types of water quality basins, each draining slowly to provide for long-term settling of sediment particles, may be selected (*Manual*, Chapter 4, Treatment BMP's).

- Permeable Pavement Systems
- Bioretention (Rain Garden or Porous Landscape Detention)
- Extended Detention Basin
- Sand Filter Basin
- Constructed Wetland Basin
- Underground Practices
- Retention Pond

Step 3. Stabilize Drainageways

Drainageway erosion, natural and manmade, can be a major source of sediment and associated constituents, such as phosphorus. Natural drainageways are often subject to bed and bank erosion when urbanizing areas increase the frequency, rate and volume of runoff. It is important that drainageways adjacent to or traversing development sites be stabilized. One of three basic methods of stabilization

may be selected.

- Constructed Grass or Riprap
- Stabilized Natural Channel
- Constructed Wetland Channel

Step 4. Implement Industrial and Commercial BMPs

If the development includes industrial or commercial uses, the need for specialized BMPs must be considered.

- Covering Storage and Handling Areas
- Spill Containment and Control

Other BMPs

Manufactured devices such as water quality vaults and inlets, infiltration trenches and oil/grease separators, may be considered when stormwater quality is not required in accordance with Section 3.3.7 and site constraints do not allow for full implementation of Step 1 and Step 2 BMPs.

13.3.3 Minimum Design Criteria

It is expected that the BMPs designed for each site will vary depending on land use, extent of development, redevelopment constraints and the physical characteristics of the site (soils, slope and runoff).

The County will evaluate the adequacy and appropriateness of the proposed BMPs based on their fulfillment of the previously stated objectives, as well as the satisfaction of the following minimum design criteria:

1. A site specific Stormwater Quality Control Plan and associated hydraulic calculations will be incorporated in the Phase III Drainage Report and plan describing: the type of BMPs selected and associated hydraulic calculations, a construction and implementation schedule and a description of long term maintenance requirements and responsibilities.

2. The design of sites will incorporate one or more BMPs from Step 1 and Step 2 designed to capture and treat the calculated EURV as defined in the *Manual*.

When incorporating Excess Urban Runoff Volume (EURV) into a stormwater quantity detention basin, the capacity will be based on the following:

Onstream WQCV and EURV facilities are not recommended unless they are designed as regional facilities. If a non-regional WQCV and EURV facility is placed onstream, it must be designed to serve the upstream watershed based on current development conditions.

3. The design of sites will incorporate one or more BMPs from Steps 3 and 4 depending on the planned use of the site and the proximity to drainageways.

4. Design criteria for manufactured devices are dependent on the specific device. The appropriateness of a device will be considered on a case-by-case basis.

5. Non-residential projects which include more than the required number of parking spaces will be required to employ one or more Step 1 BMPs to limit the effective impervious area which would result from the minimum required number of parking spaces as determined by the ZR.

6. Permanent erosion protection and stabilization measures will be provided for all disturbed areas.

13.3.4 Control Measure Requirements

The control measures for applicable development sites shall meet one of the following base design standards listed below:

(A) WQCV Standard: The control measure(s) is designed to provide treatment and/or infiltration of the WQCV and:

1) 100% of the applicable development site is captured, except Jefferson County staff may exclude up to 20%, not to exceed 1 acre, of the applicable development site area when Jefferson County staff has determined that it is not practicable to capture runoff from portions of the site that will not drain towards control measures. In addition, the applicant must provide documentation that the implementation of a separate control measure for that portion of the site is not practicable (e.g., driveway access that drains directly to street).

2) Evaluation of the minimum drain time shall be based on the pollutant removal mechanism and functionality of the control measure implemented. Consideration of drain time shall include maintaining vegetation necessary for operation of the control measure (e.g., wetland vegetation).

(B) Pollutant Removal Standard: The control measure(s) is designed to treat at a minimum the 80th percentile storm event. The control measure(s) shall be designed to treat stormwater runoff in a manner expected to reduce the event mean concentration of total suspended solids (TSS) to a median value of 30 mg/L or less.

1) 100% of the applicable development site is captured, except Jefferson County staff may exclude up to 20% not to exceed 1 acre of the applicable development site area if Jefferson County staff has determined that it is not practicable to capture runoff from portions of the site that will not drain towards control measures. In addition, Jefferson County staff must also determine that the implementation of a separate control measure for that portion of the site is not practicable (e.g., driveway access that drains directly to street).

(C) Runoff Reduction Standard: The control measure(s) is designed to infiltrate into the ground where site geology permits, evaporate, or evapotranspire a quantity of water equal to 60% of what the calculated WQCV would be if all impervious area for the applicable development site discharged without infiltration. This base design standard can be met through practices such as green infrastructure. “Green infrastructure” generally refers to control measures that use vegetation, soils, and natural processes or mimic natural processes to manage stormwater. Green infrastructure can be used in place of or in addition to low impact development principles.

(D) Applicable Development Site Draining to a Regional WQCV Control Measure: The regional WQCV control measure must be designed to accept the drainage from the applicable development site. Stormwater from the site must not discharge to a water of the state before being discharged to the regional WQCV control measure. The regional WQCV control measure must meet the requirements of the MS4 Permit.

(E) Applicable Development Site Draining to a Regional WQCV Facility: The regional WQCV facility is designed to accept drainage from the applicable development site. Stormwater from the site may discharge to a water of the state before being discharged to the regional WQCV facility. Before discharging to a water of the state, at least 20 percent of the upstream imperviousness of the applicable development site must be disconnected from the storm drainage system and drain through a receiving pervious area control measure comprising a footprint of at least 10 percent of the upstream disconnected impervious area of the applicable development site. The control measure must be designed in accordance with a design manual identified by the permittee. In addition, the stream channel between the discharge point of the applicable development site and the regional WQCV facility must be stabilized.

The regional WQCV facility must meet the following requirements:

1) The regional WQCV facility must be implemented, functional, and maintained following good engineering, hydrologic and pollution control practices.

2) The regional WQCV facility must be designed and maintained for 100% WQCV for its entire drainage area.

3) The regional WQCV facility must have capacity to accommodate the drainage from the applicable development site.

4) The regional WQCV facility be designed and built to comply with all assumptions for the development activities planned within its drainage area, including the imperviousness of its drainage area and the applicable development site.

5) Evaluation of the minimum drain time shall be based on the pollutant removal mechanism and functionality of the facility. Consideration of drain time shall include maintaining vegetation necessary for operation of the facility (e.g., wetland vegetation).

6) The regional WQCV facility shall meet the requirements in the MS4 Permit for the regional WQCV facility consistent with requirements and actions for control measures.

7) The regional WQCV facility must be subject to Jefferson County's authority consistent with requirements and actions for a Control Measure in accordance with the MS4 Permit.

8) Regional Facilities must be designed and implemented with flood control or water quality as the primary use. Recreational ponds and reservoirs may not be considered Regional Facilities. Water bodies listed by name in surface water quality classifications and standards regulations (5 CCR 1002-32 through 5 CCR 1002-38) may not be considered regional facilities.

(F) Constrained Redevelopment Sites Standard:

1) Applicability: The constrained redevelopment sites standard applies to redevelopment sites meeting the following criteria:

(a) The applicable redevelopment site is for a site that has greater than 75% impervious area, and

(b) Jefferson County staff has determined that it is not practicable to meet any of the design standards in the MS4 Permit, or

(c) Jefferson County staff determination shall include an evaluation of the applicable redevelopment sites ability to install a control measure without reducing surface area covered with the structures.

2) Constrained Redevelopment Sites Design Standard: The control measure(s) is designed to meet **one** of the following:

(a) Provide treatment of the WQCV for the area captured. The captured area shall be 50% or more of the impervious area of the applicable redevelopment site. Evaluation of the minimum drain time shall be based on the pollutant removal mechanism and functionality of the control measure implemented,

(b) The control measure(s) is designed to provide for treatment of the 80th percentile storm event. The control measure(s) shall be designed to treat stormwater runoff in a manner expected to reduce the event mean concentration of total suspended solids (TSS) to a median value of 30 mg/L or less. A minimum of 50% of the applicable development area including 50% or more of the impervious area of the applicable development area shall drain to the control measure(s). This standard does not require that 100% of the applicable redevelopment site area be directed to control measure(s) as long as the overall removal goal is met or exceeded (e.g., providing increased removal for a smaller area), or

(c) Infiltrate, evaporate, or evapotranspirate, through practices such as green infrastructure, a quantity of water equal to 30% of what the calculated WQCV would be if all impervious area for the applicable redevelopment site discharged without infiltration.

13.3.5 Site Plan Requirements

(A) Site Plan Requirements: Site plans that include control measures for the applicable development sites must include the following:

1) Design details for all structural control measures implemented to meet the requirements of the MS4 Permit.

2) A narrative reference for all non-structural control measures for the site, if applicable. "Non-structural control measures" are control measures that are not structural control measures, including control measures that prevent or reduce pollutants being introduced to water or that prevent or reduce the generation of runoff or illicit discharges.

3) Documentation of operation and maintenance procedures to ensure the long term observation, maintenance, and operation of the control measures. The documentation shall include frequencies for routine inspections and maintenance activities.

4) Documentation regarding easements or other legal means for access of the control measure sites for operation, maintenance, and inspection of control measures.

(B) Site Plan Review: The site plan review shall include the following minimum requirements designed to prevent inadequate control measures from being implemented or modified:

1) Jefferson County approval of the control measures shall include confirmation that control measures meet the requirements of the MS4 Permit.

2) Jefferson County approval of the that site plans meet the requirements of the MS4 Permit

Chapter 14 – Detention

14.1 Introduction

The criteria presented in this chapter will be used in the design and evaluation of all facilities. The review of all planning submittals (refer to Chapter 2) will be based on the criteria presented in this section.

The main purpose of a detention facility is to store the excess storm runoff associated with an increased basin imperviousness and discharge this excess at a rate similar to the rate experienced from the basin without development. Any special design condition which cannot be defined by these *CRITERIA* will be reviewed by Planning and Zoning before proceeding with design.

Dams and water diversion/detention areas should be designed and constructed to appear as natural features, creating site amenities. Techniques to achieve this include creation of topographic changes that mimic natural conditions (including a variety of slope changes), using natural materials such as stone, blending with the textures and patterns of the surrounding landscape and using materials that match the local environment. When possible, preserve existing drainage patterns.

14.2 Detention Methods

The various detention methods are defined on the basis of where the facility is constructed, such as open space detention, parking lot or underground. Full spectrum detention is required for all new storm drainage facilities. Full spectrum detention is required for all modified facilities if additional pond volume is necessary due to an increase in the proposed development area and/or increased designed impervious area. Full Spectrum Detention will be designed as outlined in Chapter 13 and the *Manual*.

14.3 Design Criteria

14.3.1 Volume and Release Rates

The maximum release rates, volumes and drain times are determined from 90% of pre-developed flow conditions *or the latest update from the Manual and design spreadsheets*.

When designing water quality and detention facilities reference the latest version of Urban Drainage UD-Detention software.

Drain times must be in conformance with CRS 37-92-602 (8).

14.3.2 Design Frequency

All detention facilities are to be designed for the 100-year recurrence interval flood.

14.3.3 Hydraulic Design

Hydraulic design data for sizing of detention facilities outlet works is as follows:

1. Weir flow

The general form of the equation for horizontal crested weirs is:

$Q = CLH^{3/2}$

Where Q = discharge (cfs)

C = weir coefficient

(*Table 1401*)

L = horizontal length (feet)

H = total energy head (feet)

Another common weir is the v-notch; the equation is as follows:

$$Q = 2.5 \tan(\theta/2) H^{5/2}$$

Where θ = angle of the notch at the apex (degrees)

When designing or evaluating weir flow, the effects of submergence must be considered. A single check on submergence can be made by comparing the tailwater to the headwater depth. The example calculation for a weir design on Figure 1403 illustrates the submergence check.

2. Orifice Flow

The equation governing the orifice opening and plate is the orifice flow equation:

$$Q = CdA\,(2gh)^{1/2}$$

Where Q = Flow (cfs)

C_d = Orifice coefficient

A = Area (ft^2)

g = Gravitational constant = 32.2 ft/sec^2

h = Head on orifice measured from centerline of orifice (ft)

An orifice coefficient (C_d) value of 0.65 will be used for sizing of square edged orifice openings and plates.

14.4 Design Standards for Open Space Detention

14.4.1 State Engineer's Office

Any dam constructed for the purpose of storing water, with a surface area, volume or dam height as specified in CRS 37-87-105 as amended, will require the approval of the plans by the State Engineer's Office. All detention storage areas will be designed and constructed in accordance with these *CRITERIA*. Those facilities subject to the state statutes will be designed and constructed in accordance with the criteria of the state.

14.4.2 Grading Requirements

Slopes on riprapped earthen embankments will not be steeper than 3 (horizontal) to 1 (vertical). For grassed detention facilities, the minimum bottom slope will be 2.0 percent measured perpendicular to the trickle channel. Slopes for detention ponds that are eligible for Urban Drainage maintenance assistance will not be steeper than 4 (horizontal) to 1 (vertical).

14.4.3 Retaining Walls

Retaining walls are permitted in detention ponds below the 100-year water surface elevation as long as all of the following requirements are met.

- The retaining wall must be made of large blocks (one-ton weight per block or heavier) or monolithic pour concrete.

- The retaining wall must not exceed 50% of the detention pond perimeter for residential or institutional use.

- Safety improvements are provided as required by Planning and Zoning. Examples include but are not limited to fencing and guardrails.

14.4.4 Freeboard Requirements

The minimum required freeboard for open space detention facilities is 1.0 foot above the computed 100-year water surface elevation.

14.4.5 Trickle Flow Control

All grassed bottom detention ponds, except porous landscape detention, will include a concrete lined trickle channel or equivalent performing materials and design. Trickle flow criteria is presented in Section 7.4.2.6(a).

14.4.6 Outlet Configuration

See the *Manual's* Outlet Structure Fact Sheet in Chapter 4 of Volume 3 for details. Minimum pipe outlet size is 15 inches. Trash racks are required for all water quality and EURV openings and will be designed in accordance with the *Manual*.

The outlet will be designed to minimize unauthorized modifications, which affect proper function. A sign with a minimum area of 0.75 square feet will be attached to the outlet or posted nearby with the following message:

WARNING

Unauthorized modification of this outlet is a knowing violation of Section 309 of the Clean Water Act.
Punishment: Fine and/or Imprisonment: 3-6 years

The 100-year discharge must pass over the weir and therefore the weir must be of adequate length. The effective weir length (L) occurs for three sides of the box. To ensure the 100-year control occurs at the throat of the outlet pipe, a 50 percent increase in the required weir length is required. In addition, the outlet pipe must have an adequate slope to ensure throat control in the pipe.

14.4.7 Embankment Protection

Whenever a detention pond uses an embankment to contain water, the embankment will be protected from catastrophic failure due to overtopping. Overtopping can occur when the pond outlets become obstructed or when a larger than 100-year storm occurs. Failure protection for the embankment will be provided by a separate emergency spillway having a minimum capacity of twice the maximum release rate for the 100-year storm, or in the form of a buried heavy riprap layer on the entire downstream face of the embankment. Emergency spillways will be directed toward an open channel, natural drainageway, street/roadside ditch or a street (see Figure 1407). Structures will not be permitted in the path of the emergency spillway or overflow. The invert of the emergency spillway should be set equal to or above the 100-year water surface elevation.

14.4.8 Vegetation Requirements

All open space detention ponds under 7000 feet in elevation will be revegetated by either irrigated sod or natural dry-land grasses in accordance with the *Manual*. Detention ponds above 7000 feet in elevation will be revegetated according to the recommendations of the JCD and/or the *Jefferson County Small Site Erosion Control Manual*.

14.5 Design Standards for MPLD

MPLD may be used only for single family residential developments within the mountains. See Figure 1408 for the design requirements for MPLD.

All non-lot specific designs of MPLD is required at the time of development process. Lot specific design of the MPLD may be delayed until the time of building permit at the discretion of the Planning and Zoning subject to the following requirements.

- The Phase III Drainage Report includes the MPLD volume calculations and soil type/classification and percolation test if in soil type C and/or D

- The Phase III Drainage Report discusses the general location of the MPLD's and the proposed septic system, if any
- The Phase III Drainage Report includes a typical design of an MPLD
- Drainage easements and performance guarantees for MPLD's are provided

14.6 Design Standards for Parking Lot Detention

The requirements for parking lot detention is as follows:

14.6.1 Depth Limitation

The maximum allowable design depth of the ponding for the 100-year flood is 12 inches.

14.6.2 Freeboard Requirements

The minimum required freeboard for parking lot detention facilities is .25 feet above the computed 100-year water surface elevation. There may need to be more than .25 feet of freeboard depending on overflow weir capacity calculations.

14.6.3 Overflow Requirements

All parking lot detention ponds will have a safe overflow that at a minimum has capacity for the 100-year allowable release rate.

14.6.4 Outlet Configuration

The minimum pipe size for the outlet is 15" diameter where a drop inlet is used to discharge to a storm sewer or drainageway. Where a weir and a small diameter outlet through a curb are used, the size and shape are dependent on the discharge/storage requirements. A minimum pipe size of 3" diameter is recommended.

14.6.5 Performance

To assure that the detention facility performs as designed, maintenance access will be provided in accordance with Section 3.3.9. The outlet will be designed to minimize unauthorized modifications which affect function. Any repaving of the parking lot will be evaluated for impact on volume and release rates and is subject to approval by Planning and Zoning

14.6.6 Flood Hazard Warning

All parking lot detention areas will have a minimum of two signs posted identifying the detention pond area. The signs will have a minimum area of 1.5 square feet and contain the following message:

WARNING

This area is a detention basin and is subject to periodic flooding to a depth of (provide design depth).

Any suitable materials and geometry of the sign are permissible, subject to approval by Planning and Zoning.

14.6.7 EURV

EURV in a parking lot must meet the standards for permeable interlocking concrete pavement (PICP) and reinforced grass pavement outlined in the *Manual*.

14.7 Design Standards for Underground Detention

The requirements for underground detention are as follows:

14.7.1 Materials

Underground detention will be constructed using ASP, HP, HDPE or RCP. The pipe thickness cover, bedding and backfill will be designed to withstand HS-20 loading or as required by Planning and Zoning.

14.7.2 Configuration

Pipe segments will be sufficient in number, diameter and length to provide the required minimum storage volume for the 100-year design. As an option, the design can be stored in the pipe segments and the difference for the 100-year stored above the pipe in an open space detention (Section 14.4) or in a parking lot detention (Section 14.5). The minimum diameter of the pipe segments will be 36 inches.

The pipe segments will be placed side by side and connected at both ends by elbow tee fittings and across the fitting at the outlet (see Figure 1405). The pipe segments will be continuously sloped at a minimum of 0.25% to the outlet. Manholes for maintenance access (see Section 14.6.5) will be placed in the tee fittings and in the straight segments of the pipe, when required.

Permanent buildings or structures will not be placed directly above the underground detention.

14.7.3 Overflow Requirements

All underground detention will have a safe overflow that at a minimum has capacity for the 100-year allowable release rate.

14.7.4 Inlet and Outlet Design

The outlet from the detention will consist of a short (maximum 25 ft.) length(s) of CSP, HP or RCP with a 15" minimum diameter. A two-pipe outlet may be required to control both design frequencies. The invert of the lowest outlet pipe will be set at the lowest point in the detention pipes. The outlet pipe(s) will discharge into a standard manhole (see CDOT M-604-20) or into a drainageway with erosion protection provided per Sections 11.3.2, 12.2 and 12.3. If an orifice plate is required to control the release rates, the plate(s) will be hinged to open into the detention pipes to facilitate back flushing of the outlet pipe(s).

Inlet to the detention pipes can be by way of surface inlets and/or by a local private storm sewer system.

14.7.5 EURV

EURV facilities must be designed in accordance with the *Manual* design criteria, unless it is demonstrated that the proposed method is as effective as the *Manual* design criteria.

14.7.6 Maintenance Access

Access easements to the detention site will be provided in accordance with Section 3.3.10. To facilitate cleaning of the pipe segments, 3-foot diameter maintenance access ports will be placed according to the following schedule:

Maintenance Access Requirements

Detention Pipe Size	Maximum Spacing	Minimum Frequency
36" to 54"	150'	Every pipe segment
60" to 66"	200'	Every other pipe segment
>66"	200'	One at each end of the battery of pipes

The manholes will be constructed in accordance with the detail on Figure 1405.

14.8 Design Standards for Combined Detention Ponds

Combined detention ponds, such as open space/parking lot detention, must meet the relevant set of design standards for design of each portion of the detention pond.

Table 1401

Weir Flow Coefficients

Shape	Coefficient	Comments	Schematic
Sharp Crested	- (H in feet)		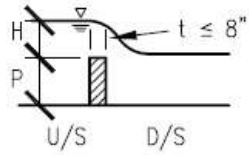
Projection Ratio (H/P = 0.4)	3.4	H < 1.0	
Projection Ratio (H/P = 2.0)	4.0	H > 1.0	
Broad Crested			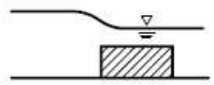
W/Sharp U/S Corner	2.6	Minimum Value	
W/Rounded U/S Corner	3.1	Critical Depth	
Triangular Section			
A) Vertical U/S Slope			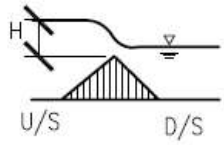
1:1 D/S Slope	3.8	H > 0.7	
4:1 D/S Slope	3.2	H > 0.7	
10:1 D/S Slope	2.9	H > 0.7	
B) 1:1 U/S Slope			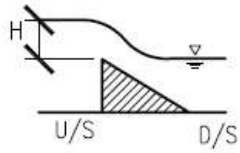
1.1 D/S Slope	3.8	H > 0.5	
3:1 D/S Slope	3.5	H > 0.5	
Trapezoidal Section			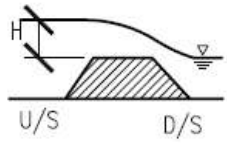
1:1 U/S Slope, 2:1 D/S Slope	3.4	H > 1.0	
2:1 U/S Slope, 2:1 D/S Slope	3.4	H > 1.0	
Road Crossings			
Gravel	3.0	H > 1.0	
Paved	3.1	H > 1.0	

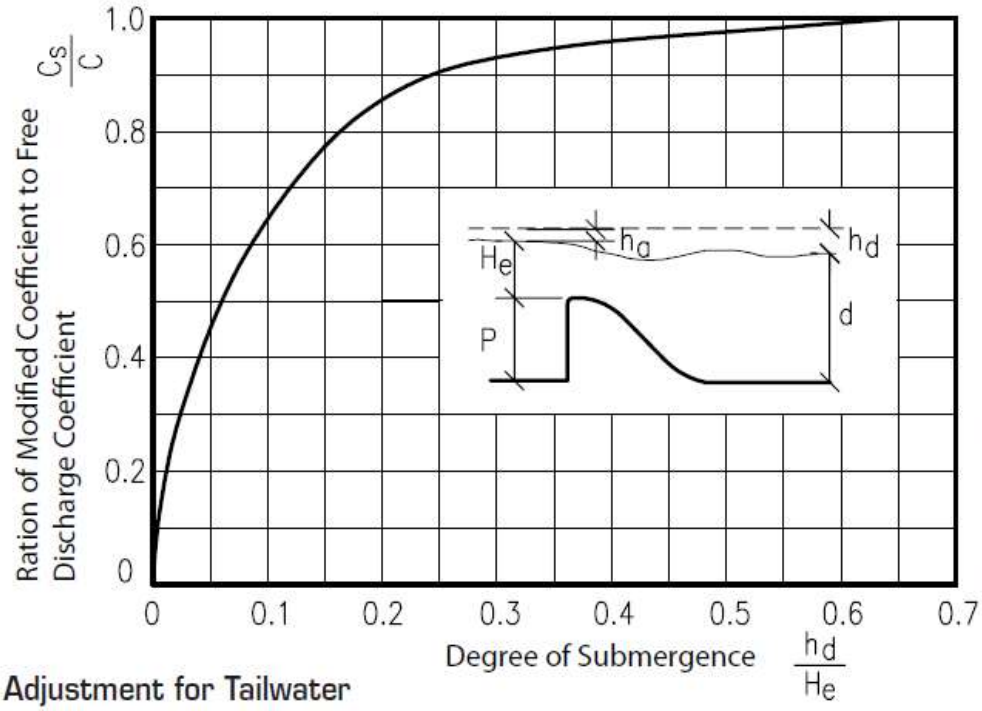

Reference: King & Brater, Handbook of Hydraulics, *McGraw Hill Book Company, 1963* – Design of Small Dams, *Bureau of Reclamation, 1977*

Adjustment for Tailwater

Figure 1401

Detention Pond Outlet Configurations

For small sites <5 acres

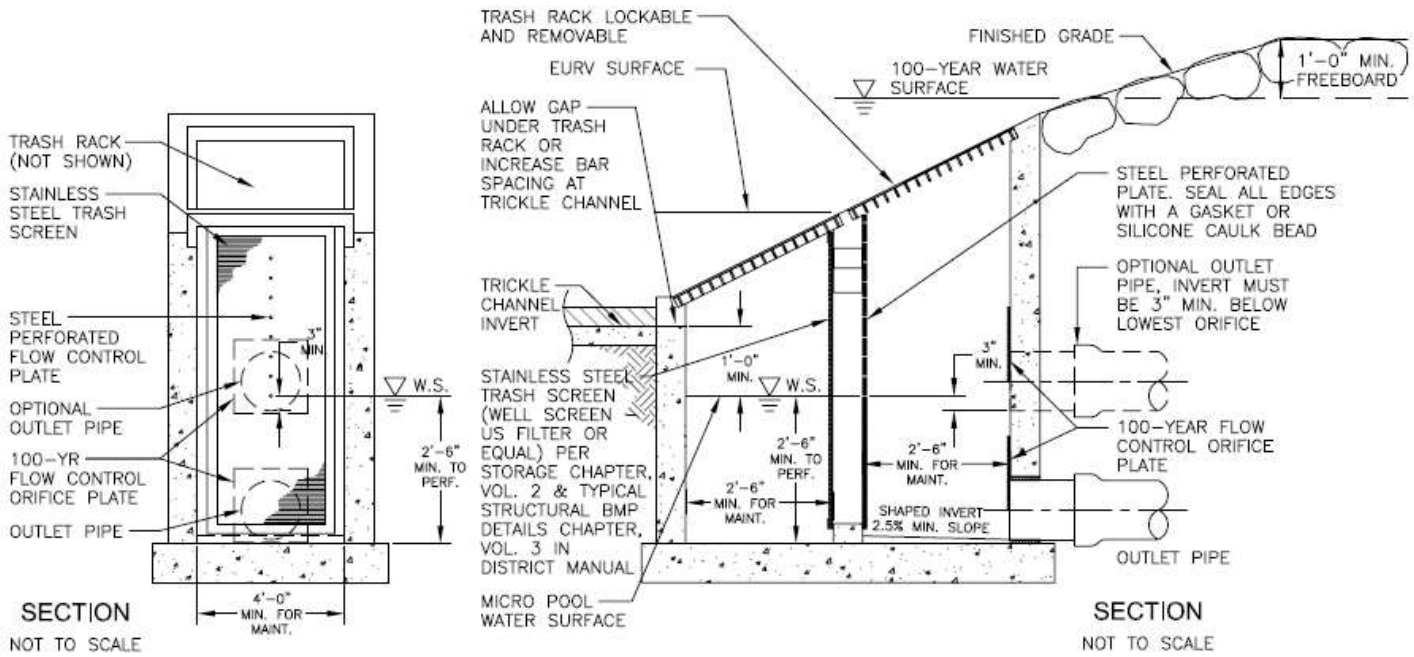

Adopted from the City and County of Denver Storm Drainage Criteria

Figure 1402

Detention Pond Details

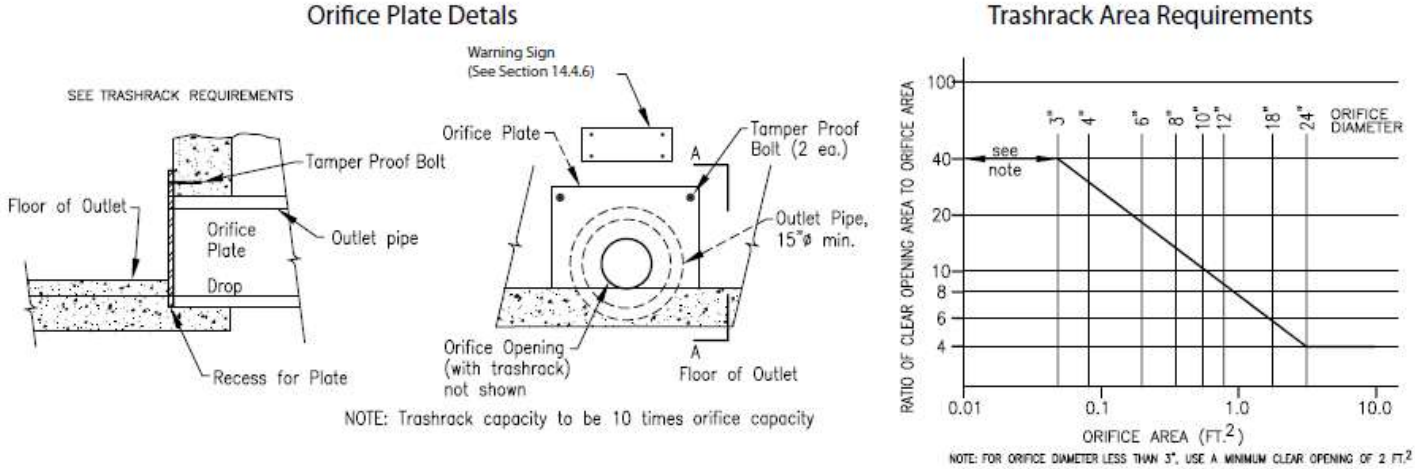

Figure 1403
Weir Design Example

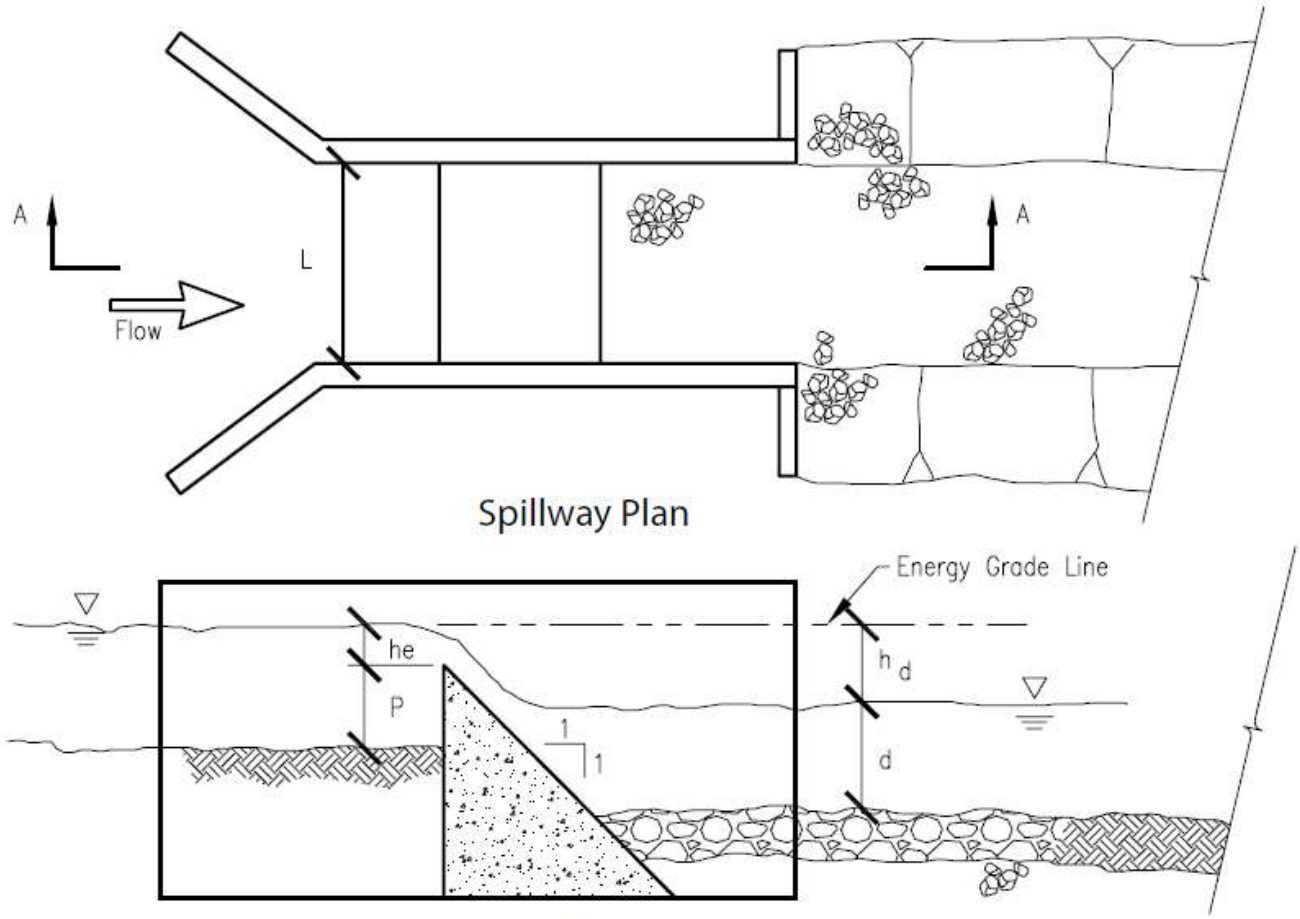

GIVEN: Q = 100 CFS, Triangular weir with vertical face, and 1:1 downstream slope, p = 2', h_e = 2', tailwater depth = 4.5', h_d = 1.5

FIND: L, and check submergence

Solution: $L_w = Q/CH^{3/2} = (100)/(3.8)/(2)^{3/2} = 9.3$ FT.

Submergence check

$\frac{h_d}{h_e} = \frac{1.5}{2.0} = 0.75$, then from Table 1401, $C_s/C = 1.0$, therefore no submergence adjustment is required.

Figure 1404
Outlet Design Example

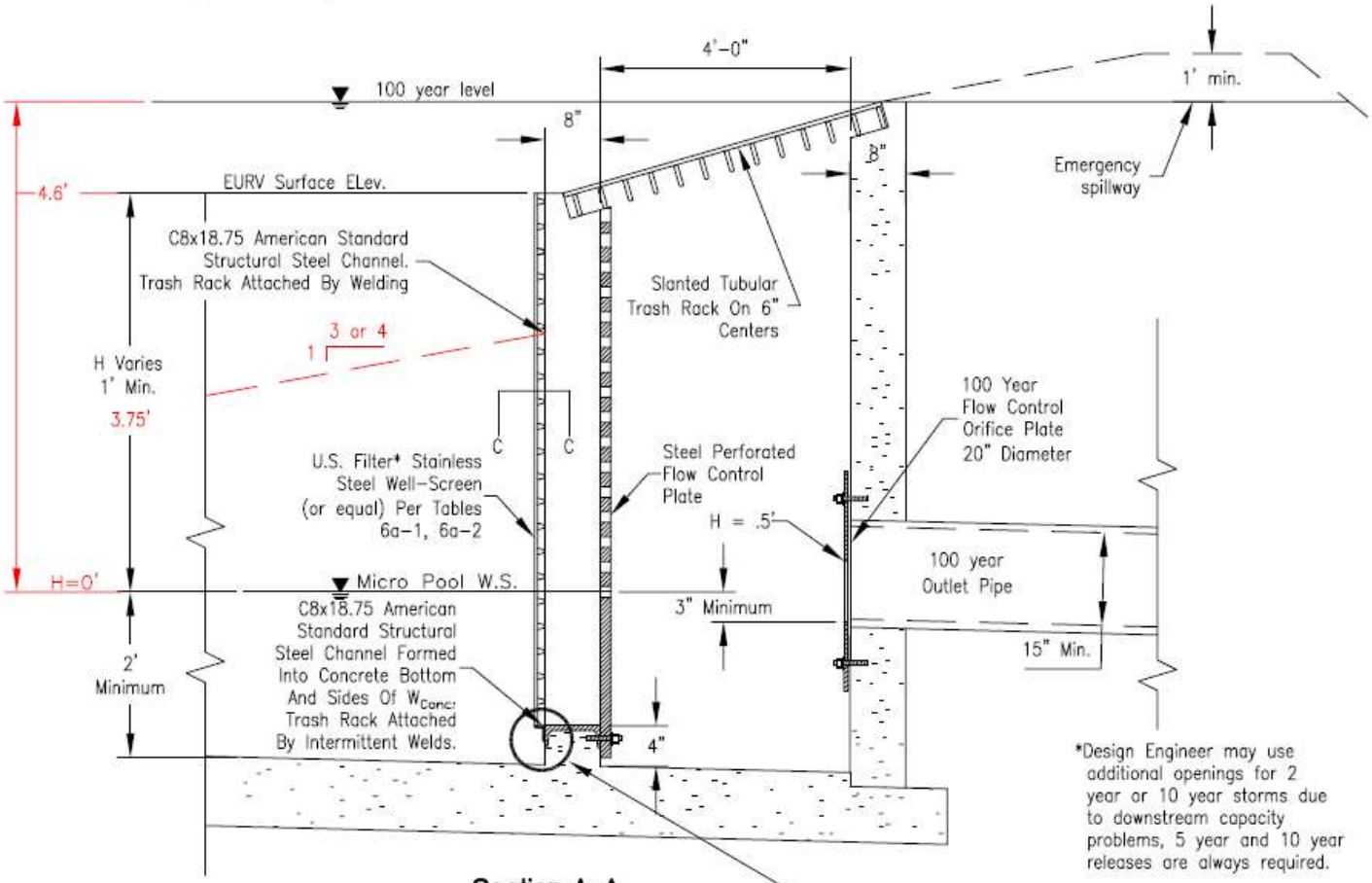

Section A-A

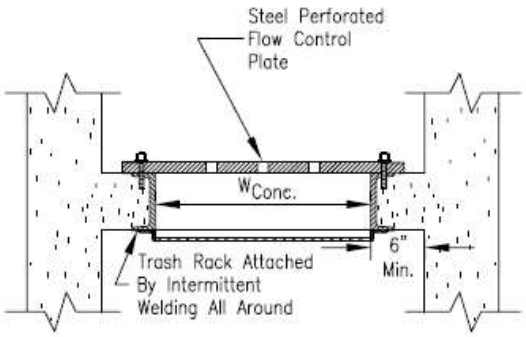

Section B-B - Plan View

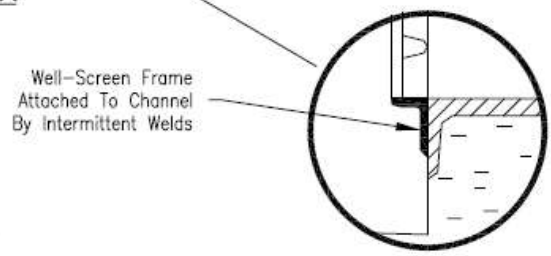

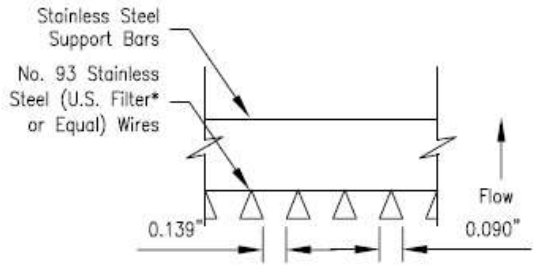

Section C-C

Limits for this Standardized Design:

1. All outlet plate openings are circular.
2. Maximum diameter of opening = 2 inches.

*U.S. Filter, St. Paul, Minnesota, USA

* Recommended only for Ponds with a large tributary area

R Value = (net open area)/(gross rack area) = 0.60

Red indicates design example

Reference: Urban Drainage and Flood Control District Drainage Criteria

Figure 1405
Underground Detention

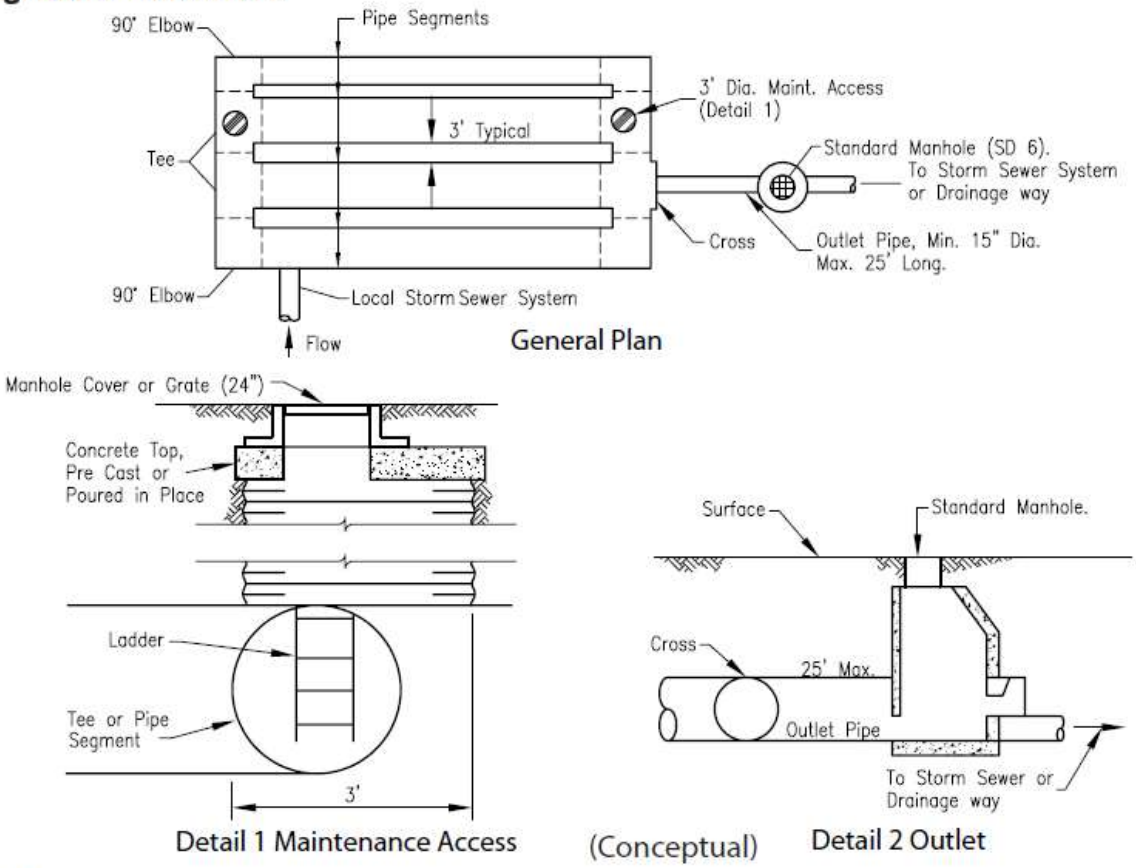

Figure 1406
Pond Forebay With Dissipator

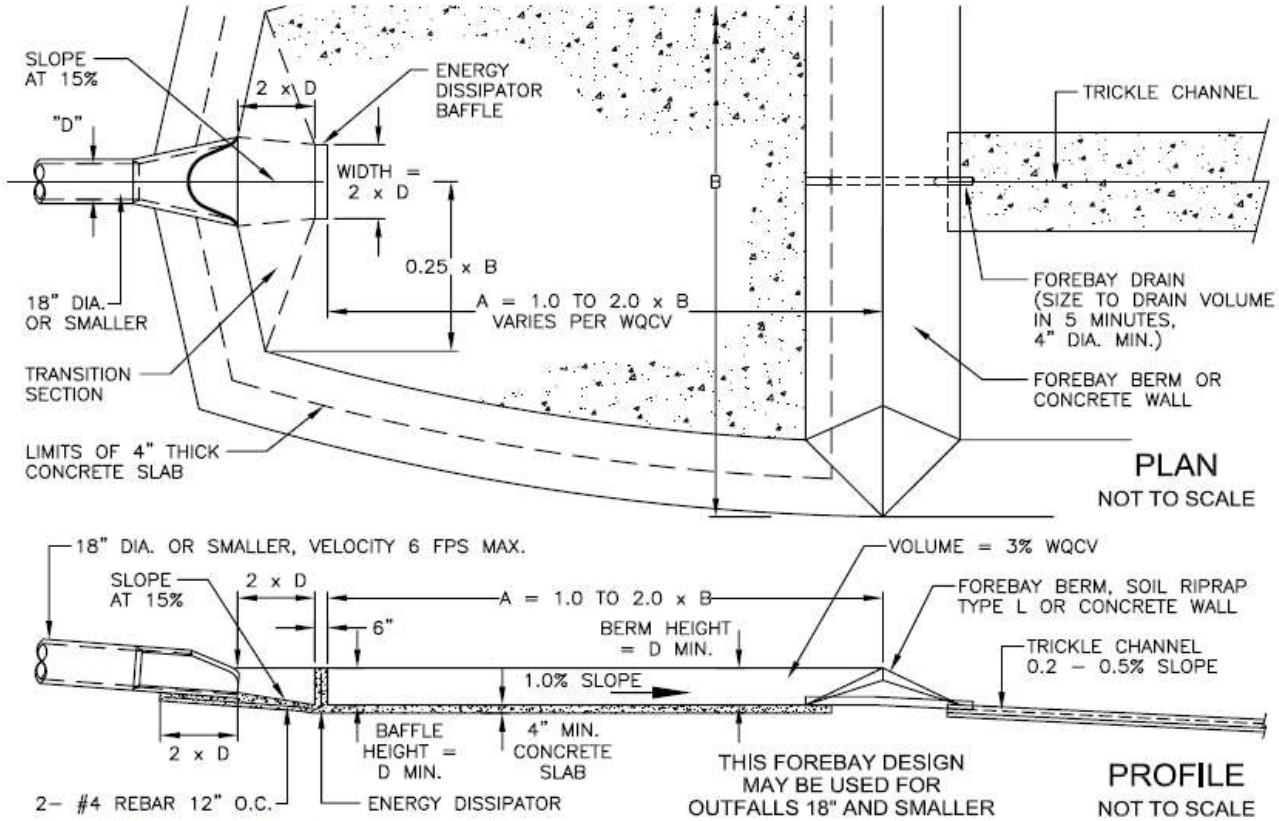

Adopted from the City and County of Denver Storm Drainage Criteria

Figure 1407

Embankment Protection Details And Rock Sizing Chart

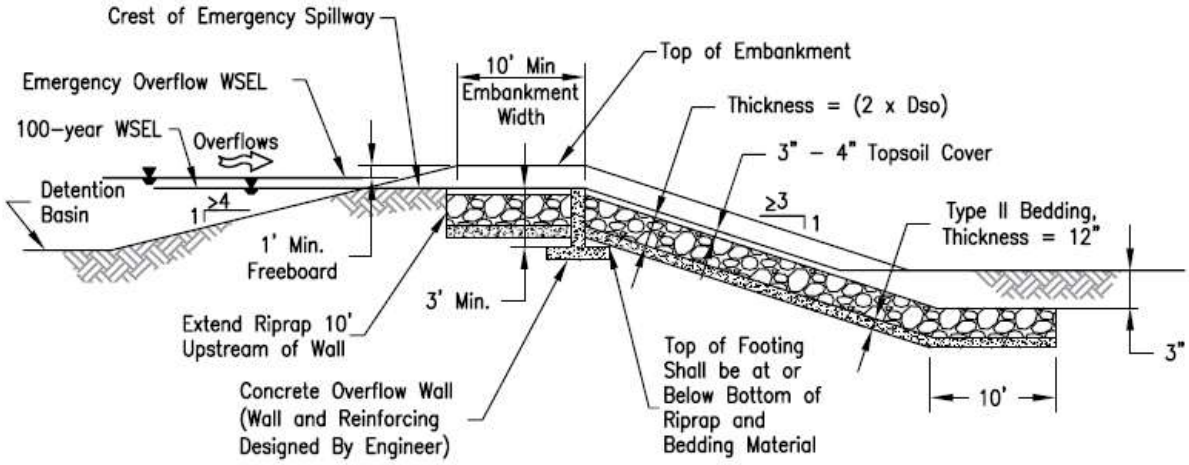

Emergency Spillway Profile

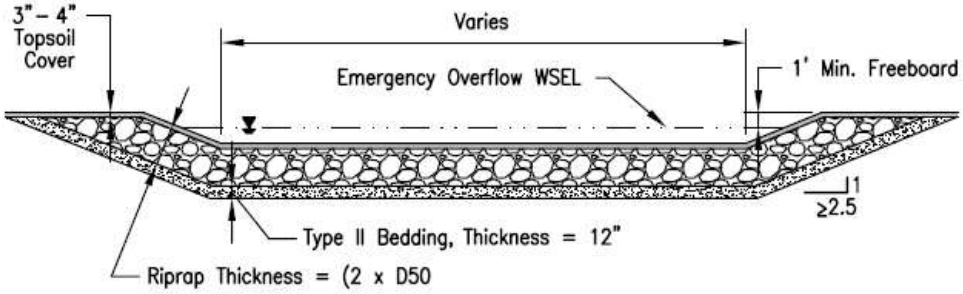

Spillway Channel at Crest and Downstream Side of Embankment

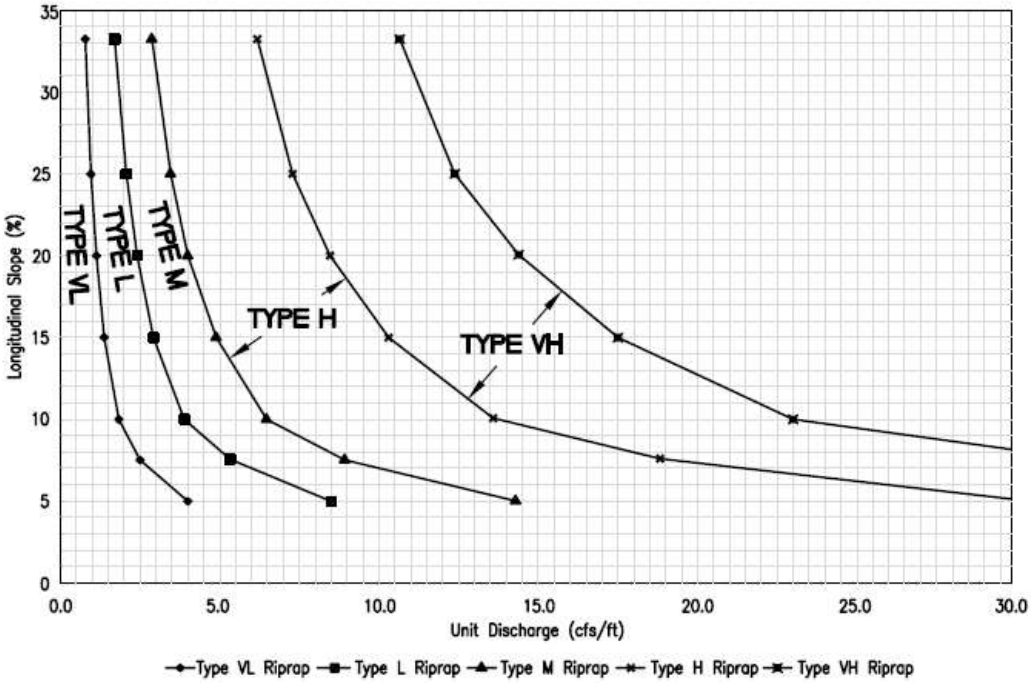

Reference: Douglas County Drainage Criteria

Figure 1408
Mountain Porous Landscape Design

NOTES:

1. Volume of Mountain Porous Landscape Design pond (MPLD): 100 year plus full water quality volume.
2. NRCS Hydrologic Soil Group:

a.) Type A and B - No percolation test required.

b.) Type C and D - Provide percolation test data for each proposed MPLD. Perform percolation test at bottom elevation of proposed MPLD. Provide soil classification analysis.

3. Provide verification that there are at least 4-feet of suitable material below the bottom of the proposed MPLD to allow for sufficient infiltration. Maximum drain time is 72 hours.
4. Maximum depth of MPLD: 5-feet including 1-foot of freeboard.
5. Maximum internal and external slopes: 2: 1 (H: V). Provide up-slopejin-flow erosion control measures. Rolled erosion control products are required for slopes exceeding 3: 1.
6. Minimum pond bottom width: 2-feet.
7. Minimum top of berm width: 1-foot.
8. Elevation of top of berm shall be with in 0.10 of a foot.
9. Overflow slope rip-rap: Type L minimum 12-inch minus. Verify with rip-rap calculations.
10. If the existing slope exceeds 30%, provide detail for key-in into native material. Based on site conditions, a slope stability analysis may be required.
11. The design engineer shall perform an open-hole inspection at time of excavation to verify soil conditions. The design engineer shall certify the volume of the MPLD with as-built drawings.
12. The MPLD shall be maintained by the property owner.

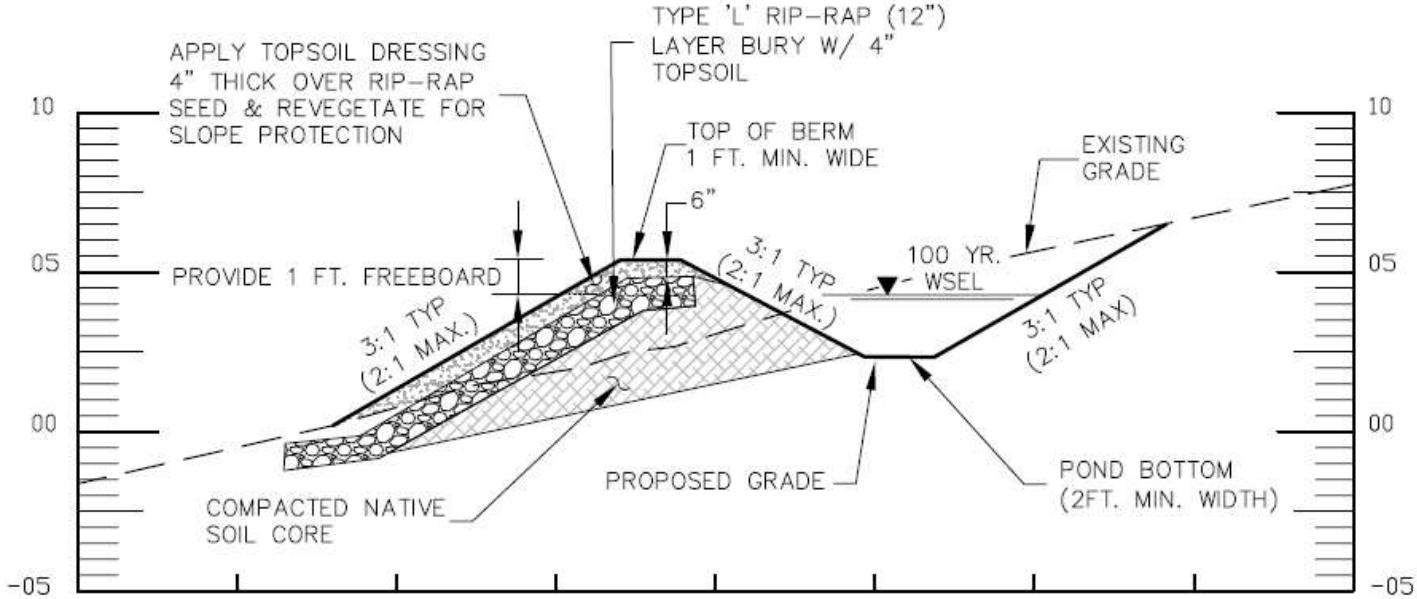

Appendix

Detention Facility Construction Drawing Checklist

General

- ☐ Overall plan view of Detention Basin
- ☐ Pond profile(s)
- ☐ Enlarged plan view of forebay(s) and construction details
- ☐ Enlarged plan view of micropool(s) and construction details
- ☐ Outlet structure construction details
- ☐ Construction details of other features and components

Overall Detention Plan View Details

- ☐ Prepare at a maximum scale of 1” =50’
- ☐ Proposed contours with contour labels and slope labels
- ☐ Existing contours with contour labels
- ☐ Show location and label forebay(s)
- ☐ Show location and label micropool
- ☐ Show location and label outlet structure
- ☐ Show location and label emergency overflow spillway
- ☐ Show location and label inflow pipe(s)
- ☐ Show location of stormwater management facility sign(s)
- ☐ Show location and label concrete trickle/low flow channel(s)
- ☐ Show location of riprap outlet protection
- ☐ Show location and label access/maintenance road(s) or ramps
- ☐ Show EURV water surface limits
- ☐ Show 100-year water surface elevation
- ☐ Existing and proposed utilities within or adjacent to Detention Basin
- ☐ Property/Tract boundaries
- ☐ Existing and proposed easements
- ☐ Label all proposed walls and provide spot elevations at top and bottom of wall

Detention Basin Profile(s)

- ☐ Low flow/trickle channel profile from inlet(s) to outlet structure

- Invert elevations, longitudinal grades along flow path
- Profile through outlet structure and outlet pipe (provide pipe sizes, length, slope and hydraulic grade line)
- Invert elevations and longitudinal slopes of outlet structure features
- Invert elevations and longitudinal slopes of outfall pipe
- EURV water surface elevation
- 100-year water surface elevation
- Micropool depths and elevations
- Emergency overflow spillway elevation (with top of bank elevations)
- Energy dissipation/rip rap protection at pond outlet
- Energy dissipation/rip rap protection at emergency overflow spillway

Enlarged plan view of forebay(s) and construction details (See Figure 1406)

- Prepare at a maximum scale of 1” = 20’
- Enlarged plan view with dimensions and spot elevations, slope of bottom
- Cross section of concrete lined forebay with concrete slopes or 6” curb sides
- Structural/reinforcing details
- Energy dissipation structure details
- Drain pipe or weir detail
- Overflow protection, rip rap size, depth, dimension and location
- Maintenance access to forebay

Enlarged plan view of micropool and construction details

- Prepare at a maximum scale of 1” = 20’
- Enlarged plan view with dimensions, depths and spot elevations
- Cross section of concrete lined or grouted boulder micropool
- Permanent pool water surface elevation
- Floor elevation
- Details of low flow/trickle channel connection to micropool
- Details of connection to or interface with outlet structure
- Details for safety ramp/improvements

Outlet structure construction details

- Enlarged view with dimensions, depths and spot elevations

- Enlarged plan view to show proposed detailed grading/spot elevations around structure
- Cross sections, as required, to show depths, concrete thicknesses, EURV, 100-year and other appropriate water surface elevations, etc.
- Water quality outlet plate details and material specifications (plate dimensions, perforation size, number of row and a number of columns)
- Water quality outlet plate anchoring detail
- Overflow grate dimensions, material, type, opening size, anchoring detail
- Well screen/trash rack dimensions, material, type, opening size, anchoring detail
- Wingwall layout and structural reinforcing details

Construction details of other features and components

- Cross section of access/maintenance road(s) or ramps with all-weather surface treatment (specify material type, thickness, slope and width)
- Emergency overflow spillway profile and cross section (weir elevation, weir length, riprap size, depth, dimensions, bedding material)
- Construction details for stormwater management facility signs
- Low flow/trickle channel construction details (cross section, material specification, slope)

PROPOSED REGULATIONS – REDMARKED COPIES

TRANSPORTATION DESIGN AND CONSTRUCTION MANUAL – REDMARKED COPY

Jefferson County Transportation Design & Construction Manual

JEFFERSON COUNTY, COLORADO PLANNING AND ZONING DIVISION

Revision Dates

The Transportation Design & Construction Manual, formerly known as Roadway Design & Construction Manual, adopted by the Board of County Commissioners of Jefferson County, Colorado on March 21, 1995, has since been amended on the following dates:

December 5, 1995

May 12, 1998

March 23, 1999

October 1, 2002

July 1, 2003

November 25, 2003

December 5, 2006

May 20, 2008

October 13, 2009

November 24, 2015

July 17, 2018

December 17, 2019

XX-XX-XX

Jefferson County Planning and Zoning Division

100 Jefferson County Parkway, Suite 3550, Golden, Colorado 80419

303-271-8700 ▪ http://planning.jeffco.us

Table of Contents

Chapter 1 General Provisions

1.1. Short Title
1.2. Jurisdiction
1.3. Purpose and Effect
1.4. Enactment Authority
1.5. Amendment and Revisions
1.6. Enforcement Responsibility
1.7. Review and Approval
1.8. Interpretation
1.9. Relationship to Other Standards

Chapter 2 Construction Drawing Requirements

2.1. General Requirements
2.2. Cover Sheet
2.3. Plan
2.4. Profile
2.5. Cross Sections
2.6. Details
2.7. Standard Notes

Chapter 3 Design and Technical Criteria

3.1. General
3.2. Street/Road Types
3.3. Functional Classification
3.4. Standard Templates
3.5. Horizontal Alignment
3.6. Vertical Alignment
3.7. Intersection Spacing, Vision Clearance Triangle, – and Sight Distance, Driveways and Private Streets/Roads
3.8. Drainage
3.9. Traffic Control
3.10 Miscellaneous

Chapter 4 Pavement Design and Technical Criteria

4.1. General Requirements
4.2. Pavement Design Report Submittal
4.3. Subgrade Investigation
4.4. Pavement Design Criteria
4.5. Pavement Design Procedure
4.6. Material Specifications

Chapter 5 Construction Specifications and Standards

5.1. Construction Specifications
5.2. Construction Standards

Chapter 6 Transportation Studies

6.1. Requirements for Transportation Studies

6.2. Transportation Information
6.3 Trip Generation Memoranda
6.4. Responsibility for Transportation Studies
6.5. Transportation Analyses
6.6. Transportation Impact Studies

Definitions

Examples: Standard Templates

Examples: Construction Standards

Design Nomographs for Pavements

Transportation Studies Formatting

Resolution

Chapter 1

General Provisions

1.1. Short Title

These regulations together with all future amendments shall be known as the "Jefferson County Transportation Design and Construction Manual" (hereafter called MANUAL) as referenced in the Jefferson County Land Development Regulation (hereafter called LDR) and the Jefferson County Zoning Resolution (hereafter called ZR).

1.2. Jurisdiction

The requirements of this MANUAL shall apply to all subdividers, developers or other landowners, their employees, agents or contractors designing and constructing public and/or private streets/roads within unincorporated areas of Jefferson County (hereafter called County), except where superseded by State and/or the Federal regulations. The foregoing design and construction of transportation systems are subject to review and approval by the County pursuant to any County regulation or requirement.

1.3. Purpose and Effect

Presented in this MANUAL are the minimum design and technical criteria for the design and construction of streets/roads. All land development or any other proposed construction submitted for approval under the provisions of the LDR and/or ZR as applicable, shall include adequate transportation system analysis and appropriate transportation system design. Such analysis and design shall conform to the criteria set forth herein. Technical criteria not specifically addressed in this MANUAL shall follow the provisions of the American Association of State Highway and Transportation Officials (AASHTO) "A Policy of Geometric Design of Highways and Streets", as amended; the Colorado Department of Transportation (CDOT) Design Standards, as amended; and the Manual on Uniform Traffic Control Devices (MUTCD), as amended.

1.4. Enactment Authority

The LDR has been adopted pursuant to the authority conferred within: Article 28 of Title 30 (County Planning); Article 2 of Title 43 (State, County, and City Highway Systems); Article 20 of Title 29 (Land Use Control and Conservation); and other applicable sections of the Colorado Revised Statutes, as amended.

This MANUAL is adopted by resolution of the Board of County Commissioners, as the authority provided by which the County promulgates the LDR.

1.5. Amendment and Revisions

These criteria may be amended as new technology is developed and/or if experience gained in the use of this MANUAL indicates a need for revision. Amendments and revisions will be made by resolution of the Board of County Commissioners.

1.6. Enforcement Responsibility

It shall be the obligation of the Board of County Commissioners acting through the Department of Development and Transportation to enforce the provisions of this MANUAL.

1.7. Review and Approval

The County will review all submittals for compliance with this MANUAL. An approval by the County does not relieve the owner, engineer, or designer from responsibility of ensuring that the calculations, plans, specifications and construction are in compliance with the MANUAL and accepted engineering practices.

1.8. Interpretation

In interpretation and application of the provisions of the MANUAL, the following shall govern:

1.8.1. The provisions shall be regarded as the minimum requirements for the protection of public health, safety, comfort, convenience, prosperity, and welfare of the residents of the County.

1.8.2. Whenever a provision of this MANUAL and any other provision of the LDR or any provision in any law, ordinance, resolution, rule, or regulation of any kind, contains any restriction covering any of the same subject matter, whichever restrictions are more restrictive or impose higher standards of requirements shall govern.

1.8.3. This Jefferson County Transportation Design and Construction Manual was adopted by the Board of County Commissioners on March 21, 1995. Any amendments to this MANUAL shall be immediately effective upon its adoption by the Board of County Commissioners. All applications shall be subject to the provisions of this MANUAL that are in effect at the time of the formal application submittal, unless otherwise specified by the Board of County Commissioners resolution.

1.9. Relationship to Other Standards

If the State or Federal Government imposes stricter criteria, standards, or requirements, these shall be incorporated into the County's requirement after due process and public hearings needed to modify the County's regulations and standards.

Chapter 2

Construction Drawing Requirements

2.1. General Requirements

Construction drawings must be submitted in Portable Document Format (PDF) unless otherwise approved for hard copy submittal, to scale, shall be a complete package, which includes all details and documentation necessary for the construction of the proposed improvements. The plans shall be prepared by, or under the direction of a professional engineer, registered in the State of Colorado, and qualified in the field of civil engineering.

The final set of plans (hard copy) for each drawing shall be 24" x 36", unless otherwise approved by the County, and shall contain a title block, sheet number, scale, north arrow, and date.

The developer's engineer shall comply with Colorado Revised Statute 9-1.5-101 through 9-1.5-108 "Excavation Requirements" when the nature of work proposed (1) will involve a contract with Jefferson County (this shall include, but not be limited to binding agreements such as permits and Subdivision Improvement Agreements); (2) will involve primarily Horizontal Construction and not the construction of buildings; (3) will involve excavation that exceeds two (2) feet in depth and that is a contiguous 1,000 square feet, or involve Utility

Boring; and (4) requires the design services of a licensed professional engineer. Existing and Proposed Subsurface Utilities shall be identified on the design plans in accordance with ASCE 38 Standards. For more information please reference the Colorado Revised Statutes and Federal Highway Administration websites.

2.2. Cover Sheet

A cover sheet ~~should~~ shall be provided with each submittal which contains the following:

1. A vicinity map at a minimum scale of 1" - 2000' which shows the location and name of all arterial streets/roads within one mile of the proposed development and all streets/roads within the proposed development.
2. A legend, scale, and north arrow.
3. General notes.
4. Index of sheets.
5. Seal, signature, and date of the professional engineer responsible for plan preparation.
6. A permanent benchmark description and location based on USGS datum. At least one permanent benchmark must be established within each subdivision or filing thereof, located on public property.

If a cover sheet is not provided, the above information shall be included on the first sheet of the submittal.

2.3. Plan

The plan view shall include but not be limited to, the following:

1. The scale shall be a minimum of one (1) inch to fifty (50) feet and shown on the plan.
2. Locations and dimensions of existing and proposed improvements, property lines, easements, and Right-of-Way. Plan view limits shall extend 100 linear feet before the Point of Beginning, and 100 linear feet after the Construction End. Each Point of Beginning and Construction End shall be clearly labeled and identified with stationing.
3. Names of streets/roads.
4. Survey line ties to section or quarter corners.
5. Survey lines and centerline stationing. Stationing shall be equated to flowline stationing at horizontal radius curves, cul-de-sacs, and other departures from normal roadway cross sections.
6. Centerline stations for all intersecting roadways and commercial driveways.
7. Existing and proposed street/road improvements (sidewalk, curb, gutter, pavement limits, bridges, culverts, inlets, manholes, asphalt core sample locations, guardrails, curb ramps, etc.). Existing improvements shall be clearly depicted by a dashed line; proposed improvements shall be depicted by a solid line and or greyscale or hatching. Plans shall include existing and proposed limits for asphalt pavement, including areas of milling and overlaying, as well as new asphalt placement. All items shall have a corresponding legend.
8. Curve layout including radius, degree of curve, deflection angle, length of curve, point of curvature, and point of tangency.
9. Elevations and station shall be noted for all curb returns, points of curvature, points of tangency, and high or low points of all vertical curves. The existing and proposed percent cross slope shall be repeated on the plan sheets at select points. Include elevations and cross slopes, existing and proposed, for all lanes of intersection improvements, regardless if construction is planned for opposing streets.
10. Rate of super elevation.
11. Typical template(s) for streets/roads.

12. Match lines and consecutive sheet numbers.

13. Key map.

14. A minimum of one (1) permanent bench mark, based on United States Geological Survey's datum, fully described, within each subdivision or filing thereof.

15. Existing and proposed utilities and structures, including but not limited to: water, fire hydrants, sanitary sewer, storm sewer, telephone, gas, electric, cable television, fiber optic. Existing utility pothole information shall be organized on a separate plan sheet to identify location, depth, utility type, pipe size and material, conflicts with proposed improvements, and other information obtained during subsurface investigation. Subsurface investigation shall include new laterals or service connections to existing main lines and be clearly shown on separate plan sheets. *

16. Stations and critical elevations of all utility and drainage appurtenances. *

17. Construction phasing. *

18. Major Collector and/or Arterial intersection design at a scale of one (1) inch to twenty (20) feet. *

19. Traffic signal design at a scale of one (1) inch to twenty (20) feet. *

20. Signing and Striping Plan.

20. Noise attenuation measures/details. *

21. Trails. *

22. Sediment and erosion control measures/details. *

23. Landscaping. *

*May be included on separate plan sheets.

2.4. Profile

The profile shall include, but not be limited to the following:

1. The scale shall be a minimum of one (1) inch to five (5) feet for street profiles and a minimum of one (1) inch to ten (10) feet for road profiles, and be shown on the plan.

2. Existing (dashed line) and proposed (solid line) grades.

3. Continuous centerline stationing for the entire portion of the existing and proposed roadway shown in the plan. Clearly label centerline stationing for all intersecting roadways and commercial driveways.

4. All design elevations shall be centerline, flowline, back of curb, or lip of gutter.

5. Vertical curve data including length of curve, P.V.C., P.V.T., P.V.I., beginning and end grades. All vertical curves shall be symmetrical.

6. Curb return profiles at a horizontal scale of 1" = 10' and vertical scale of 1" = 1'.

7. All existing curbs, gutters, sidewalks, culverts or storm sewers, ditches and irrigation structures and asphalt adjacent to the proposed design, as well as the same such features that are 100 linear feet before the Point of Beginning and continue for 100 linear feet beyond the Construction End. Basis for existing grades shall be as-built elevations at intervals not to exceed fifty (50) feet. All existing grades, locations and alignments shall be field surveyed by a licensed Professional Land Surveyor for design of the proposed improvements. Previously approved designs are not an acceptable means of establishing existing grades.

8. Separate flowline or top of curb profiles shall be provided for all proposed curb and gutter, including for design of cul-de-sacs and any other departure from a 2% street/road cross slope. In addition, cross-sections at intervals not to exceed 50 feet are required if a departure from a normal cross-slope is proposed.

9. Existing and proposed utilities. *

*May be included on separate plan sheets.

2.5. Cross Sections

1. On widening or matching projects, or as required by the Jefferson County Planning & Zoning, cross sections of the proposed new construction and existing improvements within the Right-of-Way shall be provided at survey stationing at a maximum of fifty foot intervals and at locations of cross culverts. The scale shall correspond to that used on the plan and profile.

2. Cross sections shall identify both the existing or matching percent cross slope of the roadway, as well as percent proposed cross slope.

3. Cross sections shall identify the elevation at the point of match for widening projects for each station interval.

4. Cross sections shall identify the proposed new road segment in gray scale or other hatching.

5. Cross sections shall identify the proposed pavement treatment or alterations, such as mill and overlay of the match point; as well as the proposed new pavement section and respective lifts asphalt.

6. Core samples shall be collected from the existing roadway prior to construction to determine the existing asphalt depth and condition. Such cores shall not exceed 4-inches in diameter and shall be collected at the centerline of the existing road, as well as edge of existing asphalt. The existing depth of asphalt shall be represented on the cross sections.

7. Proposed widening shall avoid cross sections with gross inverts or peaks at the match point. Normal roadway cross sections shall follow AASHTO design criteria that limit the minimum cross slope to 1.5% and maximum cross slope to 3.0%. Cross slope grade change shall note exceed +/- 0.5% as measured every 50 linear feet along the station intervals. There shall be no change in existing cross slope greater than +/- 1.0% from the match point to the proposed edge of asphalt, or the flow line or the lip of the gutter pan.

Refer to Figure 2-1 “Sample Cross Section” below:

Figure 2-1 - Sample Cross Section

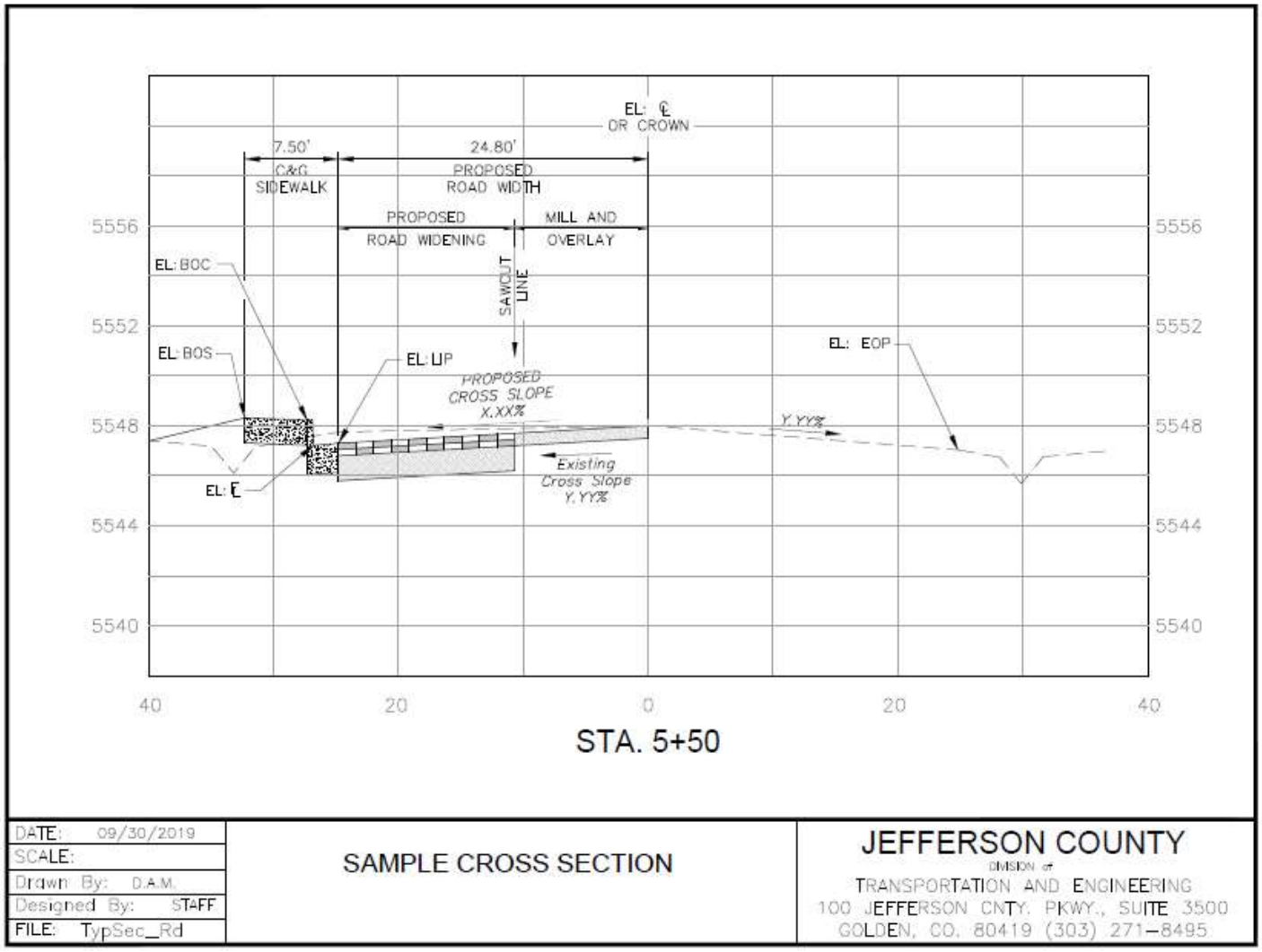

2.6. Details

Jefferson County or CDOT standard details ~~may~~ shall be referenced as applicable. Where these standards cannot be used, a separate detail sheet shall be provided with an explanation detailing why these standard details are not being used.

2.7. Standard Notes

The following general notes shall appear on the cover sheet or the first sheet of the plans for all street/road construction plan packages.

1. A Construction Permit from Transportation and Engineering is required prior to commencing work within County Right-of-Way.
2. Any work within State Right-of-Way will require a State Construction Permit.
3. The contractor shall notify Transportation and Engineering at least 24 hours prior to starting construction within the Right-of-Way.
4. The contractor shall provide all signs, barricades, ~~flagmen~~flaggers, lights, or other devices necessary for safe construction traffic control in accordance with the current edition of the MUTCD and as modified by the Colorado Supplement to the MUTCD. A construction traffic control plan shall be submitted to and approved by Transportation and Engineering prior to the issuance of any construction

permit for work within County Right-of-Way.

5. The contractor shall contact the Utility Notification Center of Colorado at least 48 hours prior to construction.

6. Construction specification: Current edition of the Colorado Department of Transportation Standard Specifications for Road and Bridge Construction, special provisions and revisions thereto, and as amended by Chapter 5 of this MANUAL.

7. The subgrade material shall be scarified or removed to a depth required by Jefferson County per information obtained from laboratory tests and/or as required in the Pavement Design Report. Additives or approved material may be required if the native material is unsatisfactory. The subgrade shall be compacted to a minimum density and moisture content range of 2 percent below optimum to 2 percent above as determined in accordance with AASHTO designation T180 or T99 and in accordance with the Standard Specifications Section 203.07.

8. Class 6 aggregate base course for shoulders shall be placed and compacted 95 percent modified Proctor Test (AASHTO T180) after placement of asphalt.

9. Existing asphalt pavement shall be straight sawcut or bladecut when adjoining with new asphalt pavement. SS-1 tack coat shall be applied to all surfaces.

10. Structural section, including subbase and asphalt, shall be constructed according to the Final Pavement design that has been prepared by the developer's engineer, and approved by Transportation and Engineering according to Chapter 4 of this MANUAL. Existing structural section at the match point shall comply with the minimum Full Depth Asphalt thickness identified in Table 4.3 "Minimum Pavement Sections" of this MANUAL for the respective road classification, regardless of the original thickness of asphalt and / or subbase.

The following notes shall appear in addition to the above for all street construction, as applicable:

1. Concrete may be placed by machine methods if all finish lines are within 1/8" + tolerance of the lines shown on the plans. The flowline must be free draining and comply with this MANUAL.

2. One half (1/2) inch expansion joint material shall be installed when abutting any existing concrete or a fixed structure.

3. The contractor is advised to first obtain inspection of forms by Transportation and Engineering before placing concrete curb, gutter, sidewalk, inlets, and/or other concrete drainage structures.

Chapter 3

Design and Technical Criteria

3.1. General

This section sets forth the minimum design and technical criteria to be used in the preparation of all public and private street/road construction plans. All street/road design shall be in accordance with the current edition of AASHTO Geometric Design of Highways and Streets, unless modified herein.

For this regulation, streets shall be used in the Plains and roads shall be used in the Mountains, except as indicated below:

3.1.1 Roads may be allowed in the Plains in locations with slopes greater than 15%, subject to approval by Planning and Zoning.

3.1.2 Streets may be required in the following Mountains locations as directed by Planning and Zoning: 1) Areas where urban development is projected based on Community Plans designations, 2) Areas where curb and gutter would be needed to mitigate drainage impacts.

3.2. Street/Road Types

3.2.1 Public Streets/Roads: Streets or roads that are owned and maintained by the City, County or State for public use.

3.2.2 Private Streets/Roads: Streets or roads that are owned, maintained, or restricted for the use by a person, group of people, or non-governmental entity.

3.2.3 Non-Maintained Streets/Roads in County ROW: Streets or roads that are owned by the County for public use, but are not constructed to a County public standard and are not County maintained.

3.3. Functional Classification

Jefferson County has adopted a Major Thoroughfare Plan based on traffic volumes, existing and/or zoned land use, and anticipated growth. The Major Thoroughfare Plan designates streets/roads as freeway, parkway, principal arterial, minor arterial, major collector, or collector.

3.3.1. Freeway: A freeway serves major regional traffic movements and carries the highest traffic volume of all classifications. A freeway is planned to have four to six through lanes and may have frontage roads. The movement of traffic takes precedence over access. Access is fully controlled and is allowed only to other freeways or to arterials by grade separated interchanges. Opposing movements on a freeway are separated by a raised or depressed median. Pedestrians and bicycle traffic are physically separated from the travel lanes. A freeway may be developed as a parkway with at-grade intersections as a first phase. Freeways are typically in State jurisdiction.

Design Speed: Special Design Required

3.3.2. Parkway: A parkway serves major regional traffic movements and carries high traffic volumes. A parkway is planned to have four to six through lanes. The movement of traffic takes precedence over access. Access is fully controlled and allowed only to major collector classifications or higher. Grade separation at major intersections is preferred over traffic signals. Opposing movements on a parkway are separated by a raised or depressed median. Pedestrians and bicycle traffic are physically separated from the travel lanes unless a bicycle lane or paved shoulder is designated per the Jefferson County Bicycle Plan as amended.

Design Speed: 40 - 50 MPH

3.3.3. Arterial.

3.3.3.1. Principal Arterial: A principal arterial serves major regional traffic movements and carries high traffic volumes. A principal arterial is planned to have four to six through lanes in the Plains and four through lanes in the Mountains. The movement of traffic takes precedence over access. Access is controlled and allowed to collectors and higher class facilities is preferred, but some restricted access to major developments may be allowed. Opposing movements are usually separated by a raised, depressed, or painted median. Pedestrians and bicycle traffic may be carried on detached walks and trails unless a bicycle lane or paved shoulder is designated per the Jefferson County Bicycle Plan as amended.

Design Speed: 35 - 45 MPH

3.3.3.2. Minor Arterial: A minor arterial serves intracommunity traffic and carries moderate traffic volumes. Minor arterials are planned to have four lanes in the Plains. In the Mountains, minor arterials are planned to have two lanes, plus turn lanes and passing or climbing lanes where warranted. Neither the movement of traffic nor access takes precedence. Reasonable access is allowed except for private residential driveways. Opposing movements are generally separated by a raised, depressed, or painted median in the Plains. Pedestrians and bicycle traffic are usually carried on a detached walk or an adjacent trail unless a bicycle lane or paved shoulder is designated per the Jefferson County Bicycle and Pedestrian Plan, as amended.

Design Speed: 30 - 40 MPH

3.3.4. Major Collector: A major collector serves intracommunity traffic and carries moderate traffic volumes. Major collectors are planned to have two lanes, plus turn lanes where warranted, in the Plains and the Mountains. Neither the movement of traffic nor access takes precedence. Reasonable access is allowed except for private residential driveways. Opposing movements are generally

separated by a median/turn lane. Pedestrians and bicycle traffic are usually carried on a detached walk or an adjacent trail unless a bicycle lane or paved shoulder is designated per the Jefferson County Bicycle and Pedestrian Plan, as amended.

Design Speed: 30 - 40MPH

3.3.5. Collector: A collector serves neighborhood traffic movements over short distances, generally accessing arterials and major collectors. A collector has two lanes, plus turn lanes where warranted, in the Plains and two lanes in the Mountains. Access takes precedence over the movement of traffic. Reasonable access for streets is allowed except for private residential driveways. Opposing movements are not physically separated. Pedestrian traffic is handled on attached or detached sidewalks in the Plains. No special accommodation is made for bicycle traffic.

Design Speed: 25 - 30 MPH

3.3.5. Local: A local street or road serves neighborhood traffic over very short distances to higher class roadways. A local street or road has two travel lanes. It is always paved in the Plains and usually paved in the Mountains. Access to adjacent land is its primary purpose. All types of access are allowed. Opposing movements are not physically separated. Pedestrian traffic is handled on attached or detached sidewalks in the Plains. No special accommodation is made for bicycle traffic.

Design Speed: 15 - 25 MPH

3.4. Standard Templates

The following templates reflect the minimum section for each street/road classification and for cul-de-sacs. Any additional requirements including, but not limited to, acceleration/deceleration lanes and left turn lanes are not shown.

Template Number	Description	Typical Volume Range in Average Daily Traffic (ADT)	Right-of-Way Width (Feet)
Public Street/Road Templates			
1	Principal Arterial Street	Greater than 25,000	130’
2	Minor Arterial Street	15,000 to 25,000	100’
3	Major Collector Street	8,000 to 15,000	~~78’~~84’
4	Collector Street (36’ FL to FL) with Attached Sidewalks	1,000 to 8,000	50’
5	Collector Street (36’ FL to FL) with Detached Sidewalks	1,000 to 8,000	37’ + 20’ minimum easement for sidewalks, maintenance and traffic signs
6	Local Street (34’ FL to FL) with Attached Sidewalks	Less than 1,000	50’
7	Local Street (34’ FL to FL) with Detached Sidewalks	Less than 1,000	35’ + 20’ minimum easement for sidewalks, maintenance and traffic signs
8	Local Street (28’ FL to FL) with Attached Sidewalks	Less than 350	45’
9	Local Street (28’ FL to FL) with Detached Sidewalks	Less than 350	30’ + 18’ minimum easement for sidewalks, maintenance and traffic signs

Template Number	Description	Typical Volume Range in Average Daily Traffic (ADT)	Right-of-Way Width (Feet)
Public Street/Road Templates			
10	Minor Arterial Road	Greater than 8,000	70’
11	Major Collector Road	2,000 to 8,000	50', 60' for turn lanes
12	Collector Road	1,000 to 2,000	50’
13	Local Road	Less than 1,000	50’
14	Street Cul-de-sac – Option 1 Street Cul-de-sac – Option 2 Street Cul-de-sac – Option 3	See LDR, Section 15	90’ 100’ 112’
15	Partial Cul-de-sac for Local Streets	See LDR, Section 15	45’R
16	Offset Cul-de-sac for Local Streets – Option 1 Offset Cul-de-sac for Local Streets – Option 2 Offset Cul-de-sac for Local Streets – Option 3	See LDR, Section 15	90’ 100’ 112’
17	Cul-de-sac for Local Roads	See LDR, Section 15	90’
Driveway, pPrivate street/road templates and Non-maintained streets/roads in County ROW templates (see section 3.7.8) *			
18	Driveway/Private Street/Road & Non-maintained Street/Road in County ROW (No Parking)	See LDR, Section 15	20’ minimum
18a	Driveway		14’- 16’
18b	Private Road		14’-24’
18c	Private Street with Curb and Gutter		14’-24’
18d	Private Street with Streetside Ditch		14’-24’
19	Pull Out for Private Road	N/A	n/a
20	Hammerhead Turnaround for Driveway/Private Road	See LDR, Section 15	varies
21	Hammerhead Turnaround for Private Street	See LDR, Section 15	varies

** The "non-maintained streets/roads in County ROW" templates can only be used if the following provisions apply:*

1. *The County is not holding a guarantee for a previous development process that would require the construction of a County public standard street/road in the ROW.*
2. *The County does not wish to have the street/road constructed to a County public standard.*
3. *The street/road is not identified on the Jefferson County Major Thoroughfare Plan.*

3.5. Horizontal Alignment

3.5.1. Horizontal Curves: The design of roadway curves should be based on an appropriate relationship between design speed and curvature and on their joint relationships with superelevation (roadway banking) and side friction. Although these relationships stem from the laws of mechanics, the actual values for use in design depend on practical limits and factors determined more or less empirically, and the most recent edition of AASHTO Policy on Geometric Design of Highway & Streets (the Green Book) Chapter 3 should be referenced for designing appropriate horizontal curves. ~~Minimum curve radii for a normal crown section based on design speed are summarized in the table below.~~

Design Speed (mph)	~~Minimum Curve Radius (feet)~~Paved	Recycled Asphalt	Gravel
15	50	60	75
20	~~107~~90	110	135
25	~~198~~140	170	210
30	~~333~~200	240	NA
35	~~510~~275	NA	NA
40	~~762~~Special Design	NA	NA
45	~~1039~~Special Design	NA	NA
50	Special Design	NA	NA

~~3.5.1.1. For collector roads, the centerline line radius may be reduced to a minimum of one hundred (100) feet, provided, however, that on a curve with a centerline radius less than four hundred (400) feet, the maximum grade shall be reduced by one (1) percent for each one hundred (100) feet or fraction thereof the radius is reduced.~~

3.5.2. Super Elevation: Super elevation is required for curves on all principal and minor arterial streets/roads and selected collector streets/roads. Minimum horizontal curve radius, rate of super elevation, and lengths of tangent runout and super elevation runoff shall be in accordance with the recommendations of the current edition of AASHTO Policy on Geometric Design of Highways and Streets.

Super elevation shall not be used on local streets, but may be used on local roads.

3.5.3. Sight Distance: Horizontal alignment must provide at least the minimum stopping sight distance for the design speed at all points. This includes visibility at intersections, as well as around curves and roadside encroachments. Where an object off the traveled surface restricts sight distance, the minimum radius of curvature is determined by the stopping sight distance. A likely obstruction may be a bridge abutment, retaining wall, cut slope, landscaping, or side or corner of a building. In considering sight distance, it shall be assumed a 6'-0" fence (as measured from finished grade) exists along all property lines except in the sight distance triangles required at all intersections. Minimum stopping sight distance (measured from the centerline of the inside lane) shall follow AASHTO Policy on Geometric Design of Highways & Streets (The Green Book) Chapter 3. ~~be as follows for centerline grades equal or less than 3%:~~

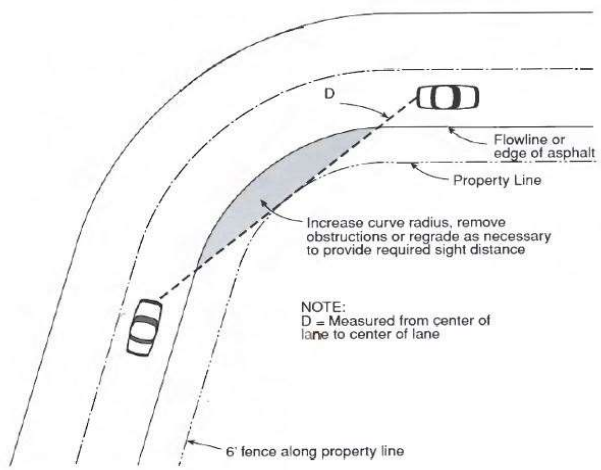

Design Speed (mph)	Stopping Sight Distance (d) (feet)
15	80
20	115
25	150~~0~~5
30	200
35	250
40	30~~2~~5
45	~~400~~360
50	42~~7~~5

~~For grades greater than 3%, stopping distance shall be in accordance with the recommendations of the current edition of AASHTO Geometric Design of Highways and Streets.~~

3.6. Vertical Alignment

3.6.1. Grades: The minimum grade for all new streets and roads is 2%, except within a sag. A minimum flowline grade of 1.5% shall be maintained around all full and partial cul-de-sac bulbs, except within a sag. Planning and Zoning may approve grades as low as 1% if existing conditions make it infeasible to construct a minimum of 1.5%. The maximum grade for all public streets is 6.0% and for public roads is 8.0%. The maximum grade for public roads may be increased to 10% where the dip of the natural terrain bears between South 60° East and South 45° West.

3.6.2. Intersection Grades: The maximum grade at intersections shall be in accordance with the following figure and table. Grades and lengths apply to the street/road controlled by a stop sign. At signalized and uncontrolled intersections, grades and lengths apply to all legs of the intersection.

	Through Street / Road		
Intersection Street/Road	Local	Collector	Major Collector/Arterial
Local	50' @ 4%	100' @ 4%	100' @ 4%
Collector	-	100' @ 3%	200' @ 2%
Major Collector/Arterial	-	-	200' @ 2%

3.6.3. Changing Grades. Continuous grade changes shall not be permitted. The use of grade breaks in lieu of vertical curves is discouraged; however, if a grade break is necessary and the algebraic difference in grade (A) does not exceed four-tenths (0.40) of a percent along the street/road, the grade break will be permitted.

The maximum grade break allowed at the point of tangency at a curb return for local and collector streets shall be two (2) percent and a maximum of one (1) percent for arterial streets.

3.6.4. Vertical Curves. All vertical curves shall be symmetrical. A vertical curve shall be used when the algebraic difference in grade (A)

equals or is greater than four-tenths (0.40) of a percent. The minimum grade within a sag (sump) vertical curve is five-tenths (0.50) of a percent. All vertical curves shall be labeled, in the profile with curve length (L) and K value (= L/A). Vertical Curve requirements shall apply to all public and private streets, roads and driveways. The minimum K values for crest and sag vertical curves shall be in accordance with ~~the following table~~ the current edition of AASHTO Policy on Geometric Design of Highways & Streets (The Green Book) Chapter 3.~~:~~

	Minimum K Value	
Design Speed (mph)	Crest	Sag
30	~~30~~19	~~40~~37
35	~~50~~29	~~50~~49
40	~~80~~44	~~70~~64
45	~~120~~61	~~90~~79
50	~~160~~84	~~110~~96

3.6.5. Connection with Existing Streets/Roads

3.6.5.1. Connection with existing roadways shall be smooth transitions conforming to normal vertical curve criteria (see Section 3.6.4. of these standards) if the algebraic difference in grade (A) between the existing and proposed grade exceeds four-tenths (0.40) of a percent. When a vertical curve is used to make this transition, it shall be fully accomplished prior to the connection with the existing improvement, and comply with the grade requirements at intersection approaches.

3.6.5.2. Existing grade shall be shown for at least three hundred (300) feet with field verified as-builts showing stations and elevations at twenty-five (25) foot intervals. In the case of connection with an existing intersection, these as-builts are to be shown within a three hundred (300) foot radius of the intersection. This information will be included in the plan and profile that show the proposed roadway.

3.6.5.3. Previously approved designs for the existing improvement are not an acceptable means of establishing existing grades; however, they are to be referenced on the construction plan where they occur.

3.6.5.4. The basis of the as-built elevations shall be the same as the design elevations (both flowline or top of curb, etc.) unless otherwise approved by Planning and Zoning.

3.7. Intersection Spacing, Vision Clearance Triangle and Sight Distance for Streets, Roads and Driveways

3.7.1. Intersection Spacing: Spacing of intersections (measured centerline to centerline) shall be in accordance with the following table and the graphic below:

Proposed Street/Road: Existing Street/Road	Minimum Separation (feet)
Local: Local or Collector	175
Local: Arterial or Major Collector	500
Collector: Collector	230
Collector: Major Collector ~~or higher~~	~~1000~~660
Collector: Arterial or higher	1000
Major Collector: Major Collector	~~660~~1000

Major Collector: Arterial or higher	1320
Arterial: Arterial or higher	5,280’

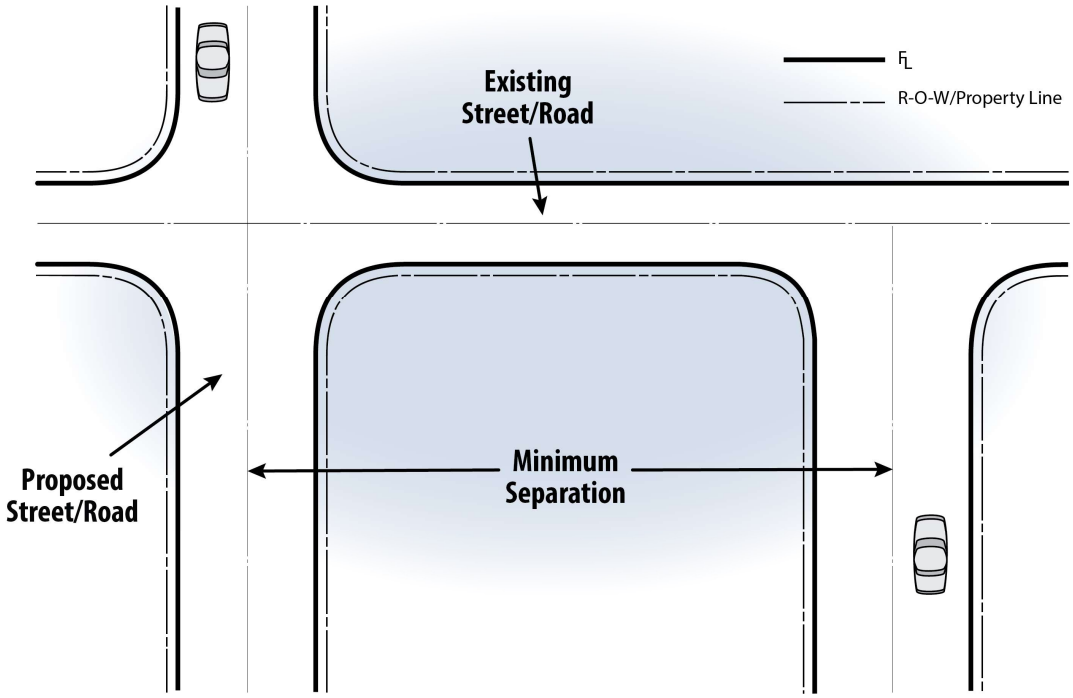

3.7.2. Vision Clearance Triangle: The table below shows where a vision clearance triangle must be provided.

Required	Not Required
Street/Road Intersections	Intersection of internal drive isles in non-residential*
Intersections of non-residential driveways with streets/roads	Multi-family and townhome developments*
Intersections of multifamily and/or townhome residential drive isles with streets/roads	
Intersections of street/roads and railroad Right-of-Way	

** Layout of these types of developments should not impede a driver’s ability to see on-coming vehicles and pedestrians at intersections*

As illustrated below, the vision clearance triangle must provide an unobstructed view across the triangle formed by the Right-of-Way/property line or easement line adjacent to a street or road as illustrated. The vision clearance triangle may also be formed by the flowline adjacent to a street or road as illustrated below subject to approval by Planning and Zoning. The approval of the vision clearance triangle formed by a flowline is predicated on a fully built-out street or road and existing Right-of-Way that exceeds the Right-of-Way requirements in the Land Development Regulation. Within the area of the triangle, there shall be no fence, wall, landscaping, structure or other obstruction to view more than forty-two (42) inches in height~~, or trees with foliage or signs lower than eight (8) feet in height~~ (measured from the flowline or edge of pavement on the street/road surface). The allowable height of forty-two (42) inches is determined by measuring from the flowline or edge of pavement, as applicable. For example, the grade on a lot within the triangle is 12’’ higher than the flow line of a gutter, the allowable height of landscaping would be 30” on the property.

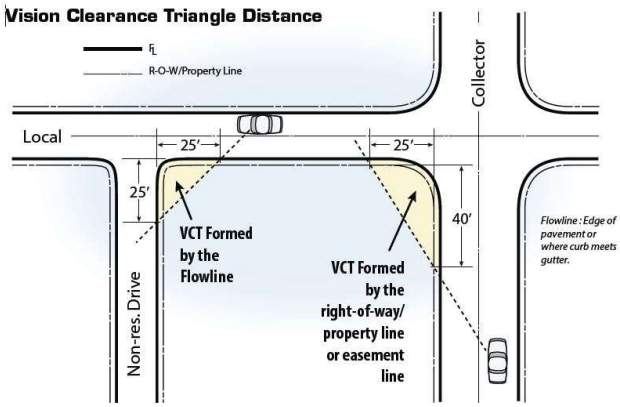

Street/Road Classification	Required Distance from Intersection
Non-residential drive	25'
Local	25'
Collector	40'
Major Collector/Arterial/Parkway	55'
Railroad Right-of-Way	55'

Note that if there is any conflict between this provision (3.7.2) and the Sight Distance provision (3.7.2.1) of this MANUAL, the Sight Distance provision shall take precedence. Note that if a physical median exists or is proposed at an access point restricting or eliminating a conflict point, the Vision Clearance Triangle requirements will not apply where no conflict points exist. See graphic below for a comparison between Sight Distance and the Vision Clearance Triangle.

Comparison between Sight Distance and the Vision Clearance Triangle

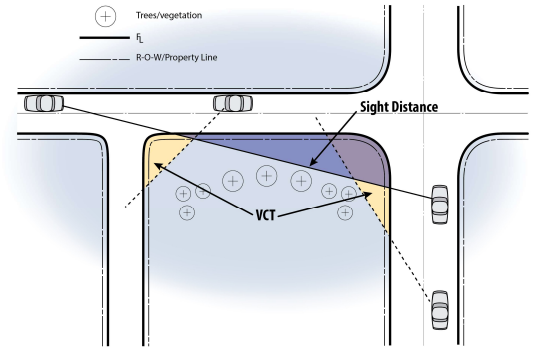

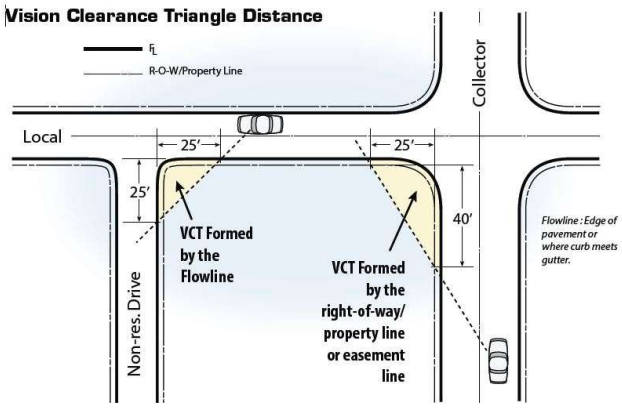

~~Street/Road Classification~~	~~Required Distance from Intersection~~
~~Non-residential drive~~	~~25'~~
~~Local~~	~~25'~~
~~Collector~~	~~40'~~
~~Major Collector/Arterial/Parkway~~	~~55'~~
~~Railroad Right-of-Way~~	~~55'~~

3.7.2.1. Sight Distance: At any street/road intersections or multifamily residential, commercial and industrial site driveways, an unobstructed view as defined above must be provided across the area formed by the flowline or edge of pavement on one street/road and the flowline or edge of pavement of the intersecting street/road (or edge of driveway) and lines (labeled d1 or d2 on the Sight Distance figure) connecting them at ten (10) feet from their point of intersection. This area will be used to ensure that drivers of vehicles exiting from the stopped approach have the minimum required sight distance available. ~~The minimum required sight distance shall be in accordance with the Minimum Sight Distance Requirements table for two lane streets/roads.~~ Minimum Sight Distance requirements for all intersection types must follow the provisions covered in the current edition of AASHTO Policy on Geometric Design of Highways & Streets (The Green Book) Chapter 9.

Minimum Sight Distance Requirements

~~(in feet) for vehicles entering onto two-lane streets/roads:~~

Operating Speed (mph)	Left Sight Distance d1 *	Right Sight Distance d2 **
20	220	130
25	260	170
30	350	260
35	430	350
40	530	440
45	610	570
50	740	700

*d1 Left sight distance Mmeasured from the driver's eye ten feet back of the flowline or pavement edge to the vehicle approaching in the outside lane.

**d2 Right sight distance mMeasured from the driver's eye ten feet back of the flowline or pavement edge to the vehicle approaching in the median lane.

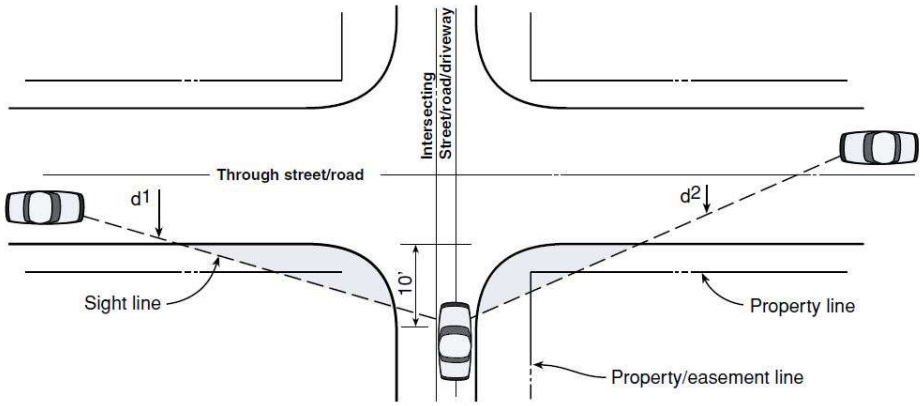

1. Requirements assume that the vehicle is stopped on the proposed public or private street/road or driveway.
2. Requirements are based on a 3.5-foot driver eye height in the stopped vehicle and a 4.25-foot height of the approaching vehicle.
3. The operating speed of the approaching vehicle is assumed to be the posted speed limit.

~~4. Sight distance requirements as shown in the Minimum Sight Distance Requirements table are designed to enable vehicles entering the street/road to accelerate to the operating speed of approaching vehicles without causing the approaching vehicles to reduce speed by more than 10 mph.~~

~~5~~4. Truck traffic (WB30 or larger) entering onto streets/roads requires longer sight distances and the current edition of AASHTO Policy on Geometric Design of Highway & Streets Chapter 9 shall be referenced for the appropriate adjustment. ~~than shown in Table.~~ Any proposed public or private street/road or driveway regularly used by truck traffic ~~may require an individual~~ will require this –analysis.

~~6~~5. When the criteria for sight distances cannot be met, the County may deny the access, prohibit left turns by vehicles entering the street/road or require speed change lanes.

3.7.3. Right Turn Lanes

3.7.3.1. Right Turn Acceleration Lanes: Right turn acceleration lanes may be required based on an approved transportation study. Right turn acceleration lanes may also be required where necessary for public safety and traffic operations based upon site specific conditions, as determined by Planning and Zoning.

3.7.3.2. Right Turn Deceleration Lanes: Right turn deceleration lanes are required at arterial and major collector street/road intersections and at driveways on arterial streets/ roads as needed based on required transportation study/analysis. Transportation study/analysis shall address storage, as applicable. Right turn deceleration lanes may also be required where necessary for public safety and traffic operations based upon site specific conditions, as determined by Planning and Zoning.

3.7.3.3. If the proposed street/road intersection or driveway is within two different speed zones, the criteria for the higher speed zone apply.

3.7.3.4. Where there are three or more through lanes in the direction of travel, right turn acceleration and deceleration lanes will be required only when determined necessary by Planning and Zoning due to high traffic volume or other site specific safety considerations.

3.7.3.5. Taper and lane lengths shall be in accordance with the following criteria after an engineering analysis shows conditions without any extenuating factors or alternative needs. All taper length and lane length alterations must be accordance with the provisions set forward by the latest editions of the current edition of AASHTO Policy on Geometric Design of Highways & Streets and the Manual on Uniform Traffic Control Devices.

Deceleration Right Turn Lanes

Design Speed (M.P.H.)	Taper Length (For 11' Lane Width)	Lane Length	Total Length* (Taper Length + Lane Length)
25	80'	120'	200'
30	100'	150'	250'
35	120'	190'	310'
40	140'	230'	370'
45	160'	280'	440'
50	180'	320'	500'

**At signalized intersections, where storage is needed for right-turning vehicles, additional length shall be provided to accommodate the average number of vehicles anticipated.*

Acceleration Right turn Lanes

Design Speed (M.P.H.)	Taper Length (For 11' Lane Width)	Lane Length	Total Length (Taper Length + Lane Length)
30	120'	190'	310'
35	120'	270'	390'
40	180'	380'	560'
45	180'	550'	730'
50	240'	760'	1000'

3.7.3.6. A continuous accel/decel lane may be required if the acceleration lane for one access and the deceleration lane for another access overlap or are in close proximity to each other.

3.7.3.7. The minimum pavement width for acceleration and deceleration lanes shall be eleven (11) feet, excluding gutter pan or shoulder.

3.7.3.8. Grade correction factors are required where street/road grades are steeper than three (3) percent.

3.7.4. Left-Turn Lanes: Left-turn lanes are required at all arterial and major collector street/road intersections and at driveways on major collector/arterial streets/roads. Design of left-turn lanes shall be in accordance with the following criteria.

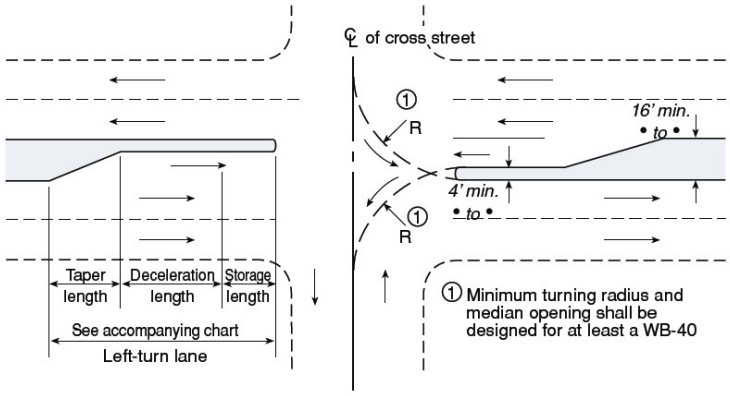

Left-Turn Lanes

Design Speed (M.P.H.)	Taper Length (For 11' Lane Width)	Decel Length	Total Length
30	100'	150'	*250'
40	140'	230'	*370'
45	160'	280'	*440'
50	180'	320'	*500'

**Plus storage length*

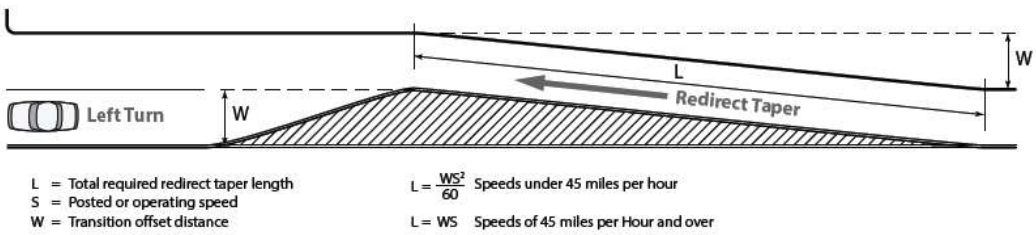

3.7.4.1. Storage Lengths: Storage lengths for signalized and unsignalized intersections shall be determined by an approved transportation analysis or transportation study, as applicable.

3.7.4.2. Median Design: Other left-turn median designs such as reverse curve taper, offset approach nose and double left-turn lanes must be approved by Planning and Zoning and shall conform to AASHTO standards.

3.7.5. Curb Returns

3.7.5.1. The table below provides the minimum street/road intersection radii measured to flowline or edge of pavement where no curb and gutter is required.

Curb Return Radii (R) To Flowline

Intersecting Street	Principal Arterial	Minor Arterial	Major Collector	Collector	Local
Principal Arterial	Special Design*	Special Design*	40'	40'	30'
Minor Arterial	Special Design*	Special Design*	30'	30'	25'
Major Collector	40'	30'	30'	30'	25'
Collector	40'	30'	30'	25'	20'
Local	30'	25'	25'	20'	20'/15'

**Special Design should provide consideration for right turn channelization.*

3.7.5.1.1. At driveway locations where curb returns are used, the minimum radii allowed on arterials and major collectors shall be twenty-five (25) feet.

3.7.5.1.2. At driveway or private access locations where there is no curb and gutter, the minimum radii (measured to edge of pavement) allowed on arterials and major collectors shall be twenty-five (25).

3.7.5.2. The minimum elevation difference (fall) around curb returns (PCR to PCR) for flow along the curb line shall be as follows:

Radius	Minimum Fall
15'	0.3'
20'	0.4'
25'	0.5'
All Others	1.27% of length from PCR to PCR

3.7.5.3. The maximum fall around curb returns shall be equal to the steepest grade coming into or out of the return multiplied by the return length, + 0.2 feet.

3.7.5.4. Curb Return Profiles: Curb return profiles are required for radii equal to or greater than thirty (30) feet within the public Right-of-Way. A midpoint elevation along the arc length of the curb return shall be shown in plan view for radii equal to or greater than twenty-five (25) feet. Curb return design shall be set in accordance with the following design procedure. General standards for flowline control and profiles within the curb returns shall be as follows:

3.7.5.4.1. The point of tangency at each curb return shall be determined by the projected tangent grade beginning at the point of intersection (P.I.) of the flowlines.

3.7.5.4.2. The arc length and external distance of the curb return shall be computed and indicated on the drawing.

3.7.5.4.3. Show the corresponding flowline (or top of curb) grade for each roadway beyond the P.C.R.

3.7.5.4.4. Design of the curb return flowline shall be such that the maximum cross slope between the midpoint of the curve and the PICR (external distance) does not exceed +5 percent. Grade breaks at the PCR's will not exceed two (2) percent for local and collector streets and one (1) percent for arterials. The flowline design of the curb return will be accomplished within the return without affecting street grades beyond the PCR. Maximum vertical curves will equal the arc length of the curb return. The elevation and location of the high or low point within the return, if applicable, is to be called out in the profile.

3.7.5.4.5. Scale for the curb return profile is 1" = 10' horizontally and 1" = 1' vertically. See Section 2.4.6.

3.7.6. Driveway Spacing

Opposing and adjacent driveway locations shall be in accordance with the following figure and table. The minimum spacing shall be increased as necessary to accommodate left turn storage bays. Offset of opposing driveway locations is not required if driveways are physically constrained to right-in, right-out.

~~NOTE: Flowline of curb/gutter or edge of asphalt if curb/gutter does not exist or edge of shoulder if asphalt does not exist.~~

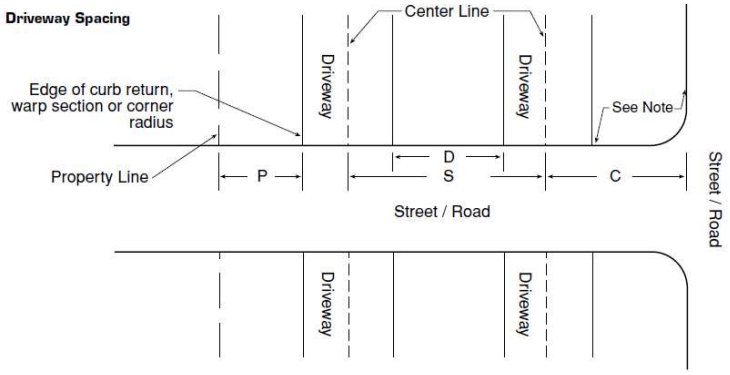

NOTE: Flowline of curb/gutter or edge of asphalt if curb/gutter does not exist or edge of shoulder if asphalt does not exist.

	Figure Reference	Distance
Residential Driveways		
From property lines	P	0’
From streets/roads	C	30’
Between driveways ~~N/A~~ ~~0'~~		
On local streets/roads	D	10’
On collector streets/roads	S	80’***
On major collector/arterial streets/roads	S	325’
Non-Residential Driveways on Locals/Collectors		
From property lines	P	0’
From major collectors/arterial streets/roads	C	300’ *
From collector streets/roads	C	200’ *
From local streets/roads	C	125’
Between driveways		
30 MPH design speed	S	180’
35 MPH design speed	S	200’
Non-Residential Driveways on Major Collectors/Arterials/Parkways		
From property lines	P	0’

From streets/roads	C	500' **
Between driveways		
40 MPH design speed	S	275'
45 MPH design speed	S	325'

** The C dimension may be reduced if approved by Planning & Zoning Division due to the existence of limiting factors. The minimum distance shall be no less than 150 feet.*

*** If the proposed driveway is restricted to right turn movements or if it is not aligned with an existing or planned left turn lane, the C dimension may be reduced if approved by Planning & Zoning Division due to the existence of limiting factors. If signalization is proposed, the minimum C distance shall be increased to 660 feet.*

****May be reduced for circular driveways or driveways with a standard hammerhead turnaround If approved by Planning and Zoning.*

3.7.7. Channelizing Islands The following figures illustrate the minimum design for channelizing islands for site accesses with various turn movement restrictions.

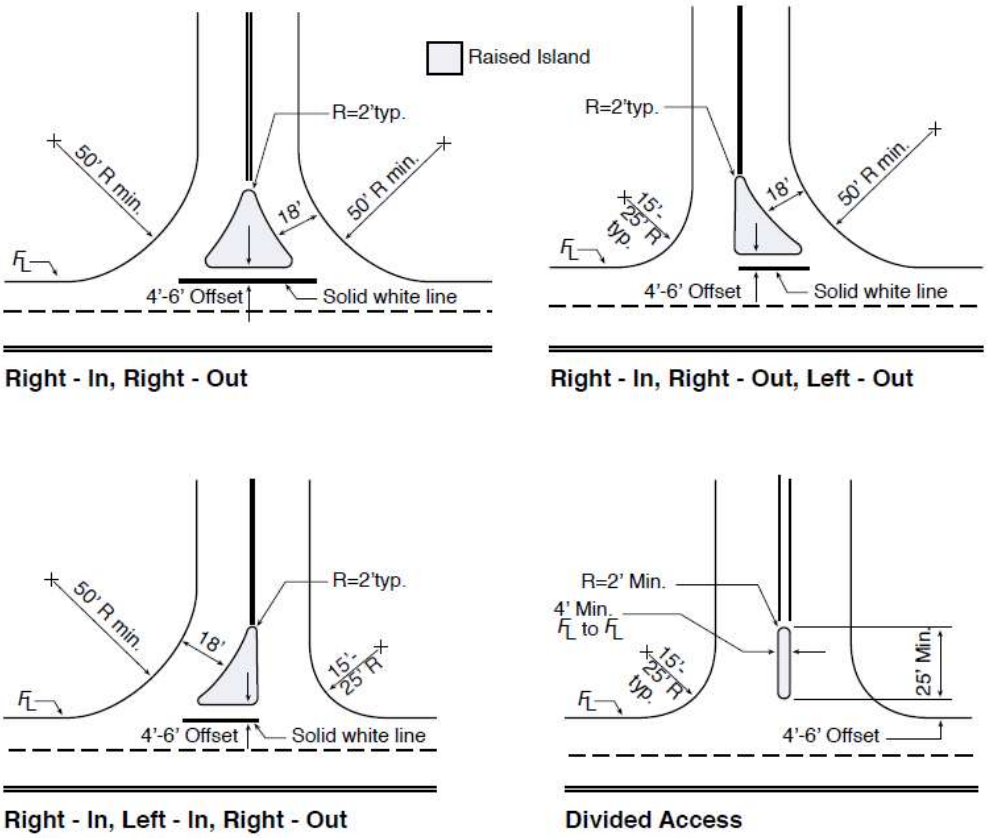

3.7.7.1. Non-rigid post mounted delineators are required on raised islands.

3.7.7.2. Curb ramps four (4) feet wide, with a maximum slope of 12:1, are required and shall be shown on the plans.

3.7.8. Non-Maintained Roads in County Right-of-Way, Driveways, and Private Street/Road~~s, and Non-Maintained Roads in County Right-of-Way~~ Standards.

3.7.8.1. Driveways serving one dwelling unit shall meet the following standards (Template 18a):

Exception: If the length of the driveway in the Plains is less than or equal to 50 feet, Sections 3.7.8.1.1. through 3.7.8.1.4. do not apply.

3.7.8.1.1. Curve Radius: Minimum horizontal curve radius of 30 feet at centerline or as required by the applicable fire protection district.

3.7.8.1.2. Width: A total width of 14 feet, including a 10-foot all-weather travel surface and two-foot shoulders on either side in accordance with Template 18a.

~~or i~~If the length of the driveway in the Mountains exceeds ~~150~~ 500 feet ~~in length~~, and is a total width of 14 feet, including a 10-foot all-weather travel surface and two-foot shoulders on either side, then pullouts shall be required at 200-foot intervals in accordance with Template 19. Due to site constraints, this 200-foot interval could be modified by 50 feet in either direction. Alternatively, if pullouts are not desired, a total width of 16 ft, including a 12-foot all-weather travel surface and two-foot shoulders on either side is ~~required in accordance with Template 18~~required.

3.7.8.1.3. Grade: Maximum grade of ten (10) percent on straight sections ~~and 12 percent grade where the dip of the natural terrain bears between South 60° East and South 45° West~~. Maximum grade of eight (8) percent for curves with radius of less than or equal to 50 feet at centerline.

Exception~~s~~: In the Mountains, a maximum grade of fifteen (15) percent on straight sections for a maximum length of one hundred (100) feet is allowed provided the appropriate fire sprinkler systems are installed per the National Fire Protection Association (NFPA) 13D or International Residential Code (IRC) P2904 - Standards for the Installation of Sprinkler Systems in One- and Two-Family Dwellings and Manufactured Homes. There may be more than one section up to 15% provided ~~if it is separated~~they are separated by a distance of 1000 feet. This spacing may be reduced to 300 feet provided a pullout in accordance with this Manual is provided in a break between sections. This pullout is required regardless of the road width.

~~3.7.8.1.4. If the length of the driveway in the Plains is less than or equal to 50 feet, Sections 3.7.8.1.1. through 3.7.8.1.34. do not apply.~~

3.7.8.1.~~5~~4. Turnaround: If the length of the driveway exceeds 150 feet, a hammerhead turnaround shall be provided in accordance with Template 20. ~~and theThe location of the turnarounds shall be approved by the appropriate fire protection district.~~ The centerline of the turnaround shall be located a minimum distance away from the structure. The minimum distance equals 1.5 times the height of the structure. Building height is measured as the distance between the average point between grade and the average point of the roof.

3.7.8.2. Private streets/roads serving more than one dwelling unit and non-maintained streets/roads~~s~~ in county Right of Way shall meet the following standards (Templates 18b, 18c, and 18d):

3.7.8.2.1. Curve Radius: Minimum horizontal curve radius of 30 feet at centerline or as required by the applicable fire protection district.

3.7.8.2.2. Width (For a street/road serving up to 15 dwelling units): A total width of 20 feet, including a 16-foot all-weather travel surface and two-foot shoulders on either side in accordance with Templates 18b, 18c or 18d ~~for roads serving up to 15 dwelling units~~. Alternatively, if ~~for a private road~~ a total width of 1~~4~~6 feet, including a 1~~0~~2-foot travel~~ed~~ surface~~,~~ and two-foot shoulders on either side~~,~~ is proposed, then ~~and~~ pullouts at ~~150~~ 200 foot intervals in accordance with Template 19 are required. Due to site constraints, this 200 foot interval could be modified by 50 feet in either direction.

3.7.8.2.2.1~~3~~. Width (For a street/road serving 16 or more dwelling units or one or more non-residential units): A total width of 24 feet, including an 18-foot paved surface (plains) or all-weather surface (mountains) and three-foot shoulders on either side is required in accordance with Templates 18b, 18c, or 18d. ~~for roads serving 16 or more dwelling units or one or more non-residential units.~~

3.7.8.2.3~~4~~. Grade: Maximum grade of ten percent on straight sections~~:~~. Maximum 12 percent grade where the dip of the natural terrain bears between South 60° East and South 45° West. Maximum grade of eight percent for curves with radius of less than or equal to 50 feet at centerline.

~~Exceptions: In the Mountains,3.7.8.2.5mM, for all new dwellings the street/road serves to 500'~~

3.7.8.3. ~~Offsite~~Non-Compliant Driveways/Private Streets/Roads:

~~The appropriate fire protection district may approve alternative standards for driveways and private roads. Plans shall be submitted~~

~~that bear the written approval of the appropriate fire protection district.The onsite and off-site driveway or private road shall meet the requirements as described in this secti~~If the proposed or existing driveway or private street/road cannot meet the requirements of this section, the following shall be submitted to Planning and Zoning through a relief request:

1) A signed and stamped letter/statement by a qualified Colorado-registered professional engineer indicating:

- The existing and/or proposed conditions,
- The conditions that do not meet requirements, and documentation of why the requirements cannot be met,
- Any offsite improvements that can and will be completed,
- That the existing or proposed driveway or private street/road will be able to serve the residence under normal and expected conditions and that the existing and/or proposed design is satisfactory,
- That the material and method of work offered adequately meets the intent of this section and the minimum prescriptive requirements of the applicable International Fire Code (IFC) 104.9, and
- This statement shall include a detailed explanation of how an emergency apparatus within the appropriate fire protection district will be able to serve the residence under normal and expected conditions. This analysis may include auto-turn or turning radius templates. Such statement shall bear the professional engineer's seal, signature and date.

2) Plan and profile showing the existing conditions and proposed design, and

~~and that the proposed design is satisfactory and that the material, method or work offered is, for the purpose intended, not less than the equivalent of that prescribed in this code in quality, strength, effectiveness, durability and safety and adequately meets the intent of this section and the minimum prescriptive requirements of 2018 International Fire Code (IFC) 104.9. . This statement shall include a detailed explanation of how an emergency apparatus within the appropriate Fire Protection District will be able to serve the residence. Tanalysis .~~ 3) A written statement from the property owner that a fire sprinkler system will be installed per National Fire Protection Association (NFPA) 13D or International Residential Code (IRC) P2904 at the time of Building Permit.

4) Affidavit, signed by the property owner and recorded with the County stating that the property owner acknowledges that the drive-way or street/road as proposed does not meet the requirements of the Transportation Design and Construction Manual and as a result, emergency services may be impacted. This form shall be provided by the County.

These submittal documents will be required to be reviewed and approved by Planning and Zoning prior to issuance of a building permit. Planning and Zoning may consult directly with the appropriate fire protection district when evaluating ~~offsite~~ driveways or private streets/roads which cannot meet the requirements of this section.~~–~~

Prior to closeout of the land disturbance permit, as-built drawings are required.

Note: This section applies to on or offsite private driveways/streets/roads on private land and within non-maintained County Right-of-Way or platted Right-of-Way. This shall not apply to County maintained Right-of-Way.

3.7.8.4. Driveway approaches and private road intersections with public roads must comply with Standard 8 - Driveway and Private Road Approaches onto Roads.

3.7.8.5. Cattle guards shall conform to the current edition of the CDOT M&S Standard Plans and approved by the appropriate fire protection district.

3.7.8.6. All gates and entry-way structures shall be approved by the appropriate fire protection district.

3.7.8.7. All streets in the Plains are required to be paved.

3.7.8.8. All rules and regulations of the applicable fire protection district shall govern unless less restrictive than the requirements of this Manual.

3.7.8.9 All culverts, bridges and other conveying structures shall meet loading requirements for the heaviest fire apparatus potentially

serving the residence(s). Maximum capacity of any bridge or culvert with a span larger than 4 feet shall be posted on signs at both approaches for through roads and at the entrance for cul-de-sacs.

3.8. Drainage

All storm drainage systems shall be designed in accordance with Jefferson County Storm Drainage Design and Technical Criteria (JCSDDTC). Safe and efficient conveyance of traffic is the primary function of streets/roads; therefore, design of the storm drainage function shall not exceed the limits (such as gutter capacity and street overtopping) set forth in the JCSDDTC. All new or repaired storm sewer pipe and associated structures within County Right-of-Way and/or easements shall be constructed with trace wire and test locations. Installation shall be tested for operation and documented with Form Letter "T", in accordance with Jefferson County Land Development Regulation Section 33.

3.8.1. Crosspans: Crosspans are not permitted across collector or arterial streets, nor are they allowed on streets with existing storm sewer systems. Crosspans may be used parallel to collector or arterial streets to convey storm runoff across local streets.

3.8.2. Inlets: Inlets shall be located to intercept gutter flow at the point gutter capacity is exceeded by the storm runoff (see Chapter 9 of the JCSDDTC for gutter capacity). Inlets shall also be installed to intercept cross-pavement flows at points of transition in superelevation. Due to the presence of curb ramps at intersections, inlets are not allowed within the curb return, but shall be located at the tangent points of the curb return.

3.8.3. Cross Slope: Except at intersections, or where superelevation is required, streets/roads shall be level from top of curb to top of curb (or flowline to flowline) and shall have a two (2) percent crown. At or within 150' of an intersection, the maximum elevation difference between flowlines is that dictated by the intersection grade (Section 3.5.2.) and the actual distance between flowlines.

3.8.3.1. Parabolic or curved crowns are not allowed. In no case shall the pavement cross slope at warped intersections exceed the grade of the through street.

3.8.3.2. Carrying the crown at a side street into the through street is permitted only when drainage considerations warrant such a design.

3.8.3.3. The rate of change in pavement cross slope, when warping side streets at intersections, shall not exceed one (1) percent every twenty-five (25) feet horizontally on local streets/roads, one (1) percent every thirty-seven and one-half (37.5) feet horizontally on collector streets/roads, or one (1) percent every fifty-six and one-half (56.5) feet horizontally on arterial streets/roads.

3.8.4. Temporary Erosion Control: Temporary erosion control is required along and at the ends of all roadways that are not completed due to project phasing, subdivision boundaries, etc., in accordance with the Jefferson County Zoning Resolution, Section 15.

3.8.5. Cross Culverts: Cross culverts shall be installed at locations where roads cross natural drainageways and/or where changes in road grade are greater than two (2) percent. The culvert slope shall match as nearly as possible that of the existing topography, but shall in no case be less than one (1.0) percent. Cross culverts for roads shall be spaced a maximum of five hundred (500) feet apart.

3.9. Traffic Control

3.9.1. Construction Traffic Control: Traffic safety in construction zones should be an integral element of every project from planning through design and construction. Pedestrian, as well as vehicular traffic, should be considered in the design of a traffic control plan. A traffic control plan shall be submitted to and approved by Transportation and Engineering prior to issuance of a construction permit.

Design of all traffic control plans shall be in accordance with Part VI of the Manual on Uniform Traffic Control Devices, Standards for Work Zone Traffic Control. All necessary signs, pavement markings, barricades, etc. shall be shown on the plan.

3.9.2. Traffic Signals: Traffic signals shall be installed at street/road intersections or site accesses identified as meeting warrants in the traffic study submitted for a proposed development. If the proposed signal location is within twelve hundred (1,200) feet of any adjacent

signal, a two-way progression analysis shall be included in the traffic study.

Design of all traffic signals shall be in accordance with the Manual on Uniform Traffic Control Devices and the Colorado Department of Transportation Standards and Specifications. Traffic signal plans shall be submitted to and approved by Planning and Zoning.

Traffic signal poles shall not be installed within sidewalks or curb ramps.

3.9.3. Signing and Striping: Plans are required for signing/ striping of new streets/roads and re-signing/striping of existing streets/roads necessitated by development. All signing/striping plans shall be in accordance with the Manual on Uniform Traffic Control Devices (MUTCD) and shall be submitted as part of the construction plans.

3.9.3.1. The signing plan shall:

1. Show the general longitudinal location of each existing and proposed sign (by side of street/road and station).
2. Specify the sign legend and sign type (from the MUTCD).
3. Specify the sign size.
4. Include a typical detail of installation dimensions (height, distance from curb or edge of pavement).
5. Include a detail of post and base dimensions and installation plan (showing any wedges or sleeves, depth below surface, any materials used).
6. Specify the blank gauge and material of the sign(s).
7. Note the reflectorization provided.

3.9.3.2. The striping plan shall show:

1. Striping material (paint, thermoplastic, preformed tape, etc.).
2. Color designation and line width.
3. Lane width.
4. Proposed and existing lane striping including skip interval.
5. Typical treatments for accel/decel lanes, turning lanes, bike lanes and crosswalks.

3.9.3.1. Stop signs shall be placed at intersections in accordance with the MUTCD, unless otherwise approved by the Director of Planning and Zoning.

3.9.3.2. All street/road name signs shall be in accordance with the current edition of DRCOG "Guidelines for the Design and Placement of Street Signs in the Denver Region".

3.10. Miscellaneous

3.10.1. Guardrail: In locations where guardrail is required, as determined by Planning and Zoning, design shall be in accordance with the Colorado Department of Transportation Standards and Specifications. Determination of guardrail requirements shall be based on Colorado Department of Transportation Roadway Design ~~Manual~~Guide, ~~Section 702~~Chapter 20 and other applicable CDOT criteria. Guardrail locations shall be shown on the construction plans.

3.10.2. Noise Attenuation: In locations where arterial streets/roads are adjacent to existing or planned residential areas, fencing and/or other noise attenuation measures are required. These measures may include, but are not limited to, earth beams, landscaping, walls, or a combination.

3.10.3. Street Lighting: Street lights shall be provided at all parkway/arterial/major collector street/road intersections. In addition, street lights shall be provided at all locations where multifamily residential, commercial or industrial site driveways intersect parkway/arterial/major collector streets/roads. Street lights shall be designed in accordance with the most recent ANTI/ICES Roadway Lighting Standards and installed in accordance with Public Service Company of Colorado standards. Light poles shall not be installed within

sidewalks or curb ramps.

3.10.4. Roundabouts: Roundabouts may be constructed subject to an approved traffic study. Roundabouts shall be designed in accordance with the current edition of the Federal Highways Administration Publication, Roundabouts: An Informational Guide, and approved by Transportation and Engineering and the appropriate fire protection district. Roundabouts shall also conform to CDOT Roadway Design Guide Chapter 19.

3.10.5. Bridges: Bridges shall be designed in accordance with CDOT Bridge Manuals, the CDOT Roadway Design Guide Chapter 15 and approved by Transportation and Engineering and the appropriate fire protection district.

3.10.6. Curb Extensions (mid-block and corner) and Pedestrian Refuge Islands: Curb extensions and pedestrian refuge islands shall be designed in accordance with the current version of the Federal Highway Administration Bicycle and Pedestrian Report, the CDOT Roadway Design Guide Chapters 12 and 14 and approved by Transportation and Engineering and the appropriate fire protection district.

Chapter 4

Pavement Design and Technical Criteria

4.1. General

This section sets forth the minimum criteria and design procedures for public ~~and private~~ street/roadway pavements. Recommended design methodologies for asphalt are addressed and essentially follow the Colorado Department of Transportation (CDOT) and the Asphalt Institute methodology. Some standardization of criteria has been made in design procedures. Other design methodologies may be presented for comparison to the current County design method. For private streets and non-maintained streets/roads in County Right-of-Way these same design methodologies are required.

4.2. Pavement Design Report Submittal

4.2.1 Preliminary Pavement Design: A Preliminary Pavement Design shall be used for estimating purposes only to determine the financial security "Exhibit A" associated with development projects. Three standardized Preliminary Pavement Designs corresponding to three zones of unique geotechnical characteristics within Jefferson County are presented in Construction Standards ~~16~~22-~~18~~24. Construction Standard ~~19~~ 25 shows each of the three zones. Zone 1 corresponds with materials associated with ~~decomposing granite~~fractured crystalline rock in the higher elevation foothills and mountains. Zone 2 addresses highly expansive clay and claystone material within the Designated Dipping Bedrock Area. The template for this zone includes edge drains for public and private streets. The inclusion of edge drains should be evaluated as a part of the preliminary and final pavement design and edge drain design and details shall be provided with the Street Construction Plans. Final pavement design modifications presented by the applicant, including changes to or elimination of edge drains, may be allowed as determined appropriate by Transportation and Engineering for public streets and Planning and Zoning for private streets. The evaluation of the edge drains in the pavement design and approval of an alternative standard shall be made based on data provided by the Geotechnical Engineer and evaluation by the County. ~~with edge drains.~~ . Zone 3 involves non-cohesive soil and weathered bedrock along the Front Range. The Preliminary Pavement Design shall be replaced with the Final Pavement Design, and the associated "Exhibit A" financial security costs recalculated, after County approval of the Final Pavement Design Report.

4.2.2 Final Pavement Design:

The final pavement design shall be completed and submitted after or in conjunction with County approval of the associated construction plans. All soil samples must be taken after overlot grading, or represent the "as-constructed" soil conditions after construction has been

completed. Pavement design approval is required prior to placement of any concrete flatwork and/or paving within County Right-of-Way.

The report shall be prepared by or under the supervision of and signed by a Professional Engineer registered in the State of Colorado and shall include the following information:

A. Vicinity map to locate the investigated area.

B. Scaled drawings showing the location of borings, and required information stated in 4.3.2.

C. Scaled drawings showing the estimated extent of subgrade soil types and Equivalent Daily Load Application (EDLA) for each street.

D. Pavement design alternatives for each street on a scaled drawing.

E. Tabular listing of Sample Designation, Sample Depth, Composite Group Number, Liquid Limit, Plasticity Index, Percent Passing the No. 200 sieve, American Association of State Highway and Transportation Officials (AASHTO) Classification, Group Index, Percent Swell from Swell Consolidation tests, and Soil Description.

F. California Bearing Ratio (CBR) or R-value test results and calculations for each soil type used in the design. Include natural moisture content and natural density.

G. Pavement design nomographs supplied by Jefferson County properly drawn to show Soil Support, EDLA and Structural Number (SN).

H. Design calculations for pavement thickness.

I. Percentage water soluble sulfates, sampled at a minimum of every other boring.

J. A discussion regarding potential subgrade soil problems including, but not limited to:

1. heave or settlement prone soils
2. frost susceptible soils
3. ground water
4. drainage considerations (surface and subsurface)
5. cold weather construction (if appropriate)
6. other factors or properties which could affect the design or performance of the pavement system

K. Recommendations to alleviate or mitigate the impact of problems discussed in Item J above.

4.3. Subgrade Investigation

4.3.1 Field Investigation: The field investigation shall consist of boring soils to a depth of at least five feet below the bottom of the proposed asphalt pavement layer elevation for roads classified as Local or Collector. Borings shall extend 10 feet below the bottom of the proposed asphalt pavement layer elevation on Major Collector / Minor Arterial and Major Arterial roadways. In all cases borings shall be spaced no more than 250 feet apart, or a minimum of one boring for each section of street, unless otherwise required by Transportation and Engineering. The borings shall be checked for ground water at the time of drilling, and then 24-hours after the borings are completed. Samples shall be taken after overlot grading is completed and the subgrade is "rough cut" (1 to 2 feet of proposed elevation). Soil classifications shall be verified after installation of utilities.

Geological features within five feet of the existing ground surface, and all new roadways proposed in the Dipping Bedrock Area, require more detailed investigation including drilling and/or trenching. Every third bore hole shall be a minimum of 10 feet deep, regardless of the road classification.

California Drive samples shall be obtained from each boring within 12-18 inches of the final subgrade elevation.

4.3.2. Boring Profiles: Boring logs shall include the following:

a. Date, Strata Elevations, Depth of Boring.

b. Natural moisture content, Blow Count and Dry Density of each undisturbed sample.

c. Water table elevation.

4.3.3. Classification Testing: Each soil sample shall be tested according to AASHTO and/or the American Society for Testing Materials (ASTM) criteria to determine: Liquid Limit, Plastic Limit, Plasticity Index, and Percentage passing the U.S. Standard No. 200 sieve. Samples of sands and gravels shall require gradation analysis for classification determination.

These data shall be determined using the following methods:

a. Liquid Limit - AASHTO T 89 (ASTM D 4318)

b. Plastic Limit - AASHTO T 90 (ASTM D 4318)

c. Passing No. 200 - AASHTO T 11 (ASTM C 117)

d. Gradation - AASHTO T 27 (ASTM D 422)

The results of these tests shall be used to calculate the AASHTO Classification and Group Index using AASHTO M 145.

4.3.4. Soil Grouping: Soil samples collected in the field investigation can be combined to form soil groups. These groups shall be based upon the AASHTO Classification, Group Index and location within the area investigated. Groupings shall not consist of samples with different AASHTO Classifications (Note: There may be more than one group index within a given classification). Composite samples can be manufactured by combining representative, equal portions of each sample contained within the group and mixing to provide a uniform composite sample of the soil group. This shall be limited to group indices within the range of 7. Composite samples shall be subjected to Classification Testing as outlined in Section 4.3.3. Moisture-Density curves must be included for groups used in the design.

4.3.5. Subbase Support Testing: Individual subbase or composite samples shall be tested to determine the support value using either CBR (California Bearing Ratio) or Hveem Stabilometer (R-value) testing. These values shall be used in the design of pavement sections in accordance with the procedures outlined in Section 4.5. Tests shall be conducted in accordance with the following procedures:

4.3.5.1. CBR Tests: California Bearing Ratio tests shall be conducted in accordance with AASHTO T 193 with the following modifications:

a. Note 4 of AASHTO T 193 shall not apply. A 3- point CBR evaluation is required.

b. The compaction method used for the CBR test shall be determined by the soil classification.

c. Surcharge shall be calculated using a unit weight of 140 pcf for bituminous pavement and 135 pcf for untreated aggregate base course.

d. The design CBR value shall be determined from the CBR - Dry Density Curve and shall be the CBR value at 95 percent compaction.

e. In addition to the values requested in AASHTO T 193, Stress-Penetration curves for each sample, a CBR - Dry Density curve and Proctor Compaction test results shall be reported.

4.3.5.2. R-Value Tests: Hveem Stabilometer tests shall be conducted in accordance with AASHTO T 190. The design R-value shall be at 300 psi exudation pressure. The reported data shall consist of:

a. Dry density and moisture content for each sample.

b. Expansion pressure for each sample.

c. Exudation Pressure - corrected R-value curve showing the 300 psi design R-value.

4.4. Pavement Design Criteria

This section sets forth the parametric input data to be used for the design of pavements of various roadway classifications. If cohesive soil mitigation is required, the soil treatment shall extend from back of sidewalk to back of sidewalk.

4.4.1. Equivalent (18 Kip) Daily Load Applications (EDLA): The pavement design procedure in this chapter is intended to provide for a 20-year service life of pavement, given that normal maintenance is provided to keep roadway surface in an acceptable condition. EDLA and Design Traffic Number (DTN) are considered equivalent units based on 20-year design criteria and an 18 kip axle loading. All data

and design nomographs in this chapter use EDLA units for pavement loading repetitions. Calculations shall be included, where applicable.

EDLA criteria for each Jefferson County roadway classification are given in Table 4.1.

Table 4.1 Recommended Equivalent (18 Kip) - Daily Load Applications (EDLA)

Classification	Class Modifier	EDLA Values
Local	Serving <50 D.U.	8
	Serving >50 D.U.	10
Collector	Residential	30
	Other	100
Major Collector/Minor Arterial	All	200
Principal Arterial	All	200

NOTE: Alternative EDLA values may be considered with justification provided by the Transportation Study, proposed land uses, and traffic analysis that defines proportion of truck vehicles, including construction truck traffic.

4.4.2. Design Serviceability: The following criteria shall be used for all Jefferson County roadways to be dedicated for public use and for all private street/roads and non-maintained streets/roads in County ROW:

Table 4.2 Serviceability Index

Roadway Classification	SI
Arterials	2.5
Collectors	2.5
Local	2.0

4.4.3. Minimum Pavement Layers: This paragraph provides the minimum acceptable pavement layers for public and private streets/roads ~~roadways~~ in Jefferson County. These pavement layer thicknesses may be used for preliminary planning purposes. Final pavement designs must be based on actual subbase support test results. Table 4.3 lists these minimum thicknesses for each roadway classification.

Table 4.3 Minimum Pavement Sections

Road Classification	EDLA	Composite Section (inches)			Full Depth Asphalt (inches)
		Asphalt	Subbase		
			Base Course	Stabilized	
<50 D.U.	8	4	6	12	5
=>50 D.U.	10	4	6	12	5
Residential	30	4	6	12	5
Other	100	5	6	12	6
Major Collector	200	5	6	12	7
Minor Arterial	200	5	6	12	7

Major Arterial	200	5	6	12	8

Regardless of the pavement layer design, all soils with an R-value less than 10, or PI greater than 15, shall be stabilized to a minimum of 12 inches below the bottom of the asphalt pavement layer, and shall be included in the depth of treatment.

Cohesive soil subbases shall be overexcavated and replaced with moisture conditioned fill. Minimum requirements for overexcavation are listed below in Table 4.3a.

Table 4.3a Minimum Overexcavation Requirement for Cohesive Soils

Plasticity Index	Depth of Overburden/Fill Treatment	
	Locals/Collectors	Major Collectors/Arterials
15-20	1 foot	2 feet
21-30	2 feet	3 feet
31-40	3 feet	4 feet

NOTES:

1. Road segments with isolated soil types may be designed separately for that individual segment.

2. Soil with (PI) over 40 shall be removed and wasted to a depth of five feet for any type of street.

3. In the Designated Dipping Bedrock Area, all bedrock shall be overexcavated to a depth of at least five (5) feet below the bottom of the proposed pavement layer. Where the bedrock is claystone, the top of the weathered claystone shall be considered as the top of bedrock. Should soil other than bedrock be found throughout the five (5) foot zone, it shall be overexcavated as shown in Table 4.3a.

4. The overexcavation areas shall be recompacted to 95% of maximum Standard Proctor Density (ASTM D-698) at 0 to +4% above optimum moisture content,. There shall be a minimum of 12 inches of soil stabilization below the bottom of the asphalt layer that is included in the total depth of overexcavation.

5. Overexcavation of overburden/fill below the stabilization section may be waived by Transportation and Engineering in areas where either previous overexcavation work during overlot grading has been validated or in cases where a thorough geotechnical investigation determines overexcavation is not warranted. Previous overexcavation work must be validated by compaction reports provided by the developer's geotechnical firm and in accordance with the Land Development Regulation (LDR).

4.4.4. Flexible Pavement Strength Coefficients: Table 4.4. contains standard design coefficients for various pavement materials. Non-standard design coefficients may be used only if approved in advance by Transportation and Engineering. In addition, design values must be verified by predesign mix test data and supported by daily construction tests; or, redesign values will be required.

Table 4.4 Strength Coefficients

Pavement Structure Component*	Strength Coefficients	(Limiting Test Criteria)
Conventional Materials		
Hot Mix Asphalt	0.40	1800 Lbs. Marshall Or R 90+)
Exist. Asphalt Pavement	0.30	(9-15 Yr)
	0.24	(>15 Yr)
Aggregate Base Course	0.12	(Cbr 80+ Or R 78+)
Exist. Aggregate Base Course	0.10	(Cbr 50+ Or R 69+)
Granular Subbase Course	0.07	(Cbr 15 Or R 50+)
Treated Materials		
Cement Treated Aggregate Base	0.23	(7 day, 650-1000 psi)
Lime Stabilized Subbase	0.14	(PI.<6, net swell <.5%, PH >12.3)

		Compressive Strength >/200 psi, per ASTM 5102-04, Procedure B
All Stabilized Subbase	0.14	Compressive Strength >/200 psi, per ASTM 5102-04, Procedure B

** The combination of one or more of the following courses placed on a subgrade to support the traffic load and distribute it to the roadbed.*

Structural Layers of a conventional flexible pavement design are defined below.

a) Surface Course: One or more layers of a pavement structure designed to accommodate the traffic load, the top layer of which resists skidding, traffic abrasion, and the disintegrating effects of climate. The top layer is sometimes called "Wearing Course.".

b) Base Course: The layer or layers of specified or selected material of designed thickness placed on a subbase or a subgrade to support a surface course. The use of base course is not accepted in areas that base course does not adequately drain from roadway system.

c) Subbase: The layer or layers of specified or selected material of designed thickness placed on a subgrade to support a base course, surface course or both.

d) Subgrade: Prepared and compacted soil extending to such a depth as to affect the structural design.

4.5. Pavement Design Procedure

4.5.1. Flexible Pavements: The following procedure should be used in determining the Structural Number (SN) of the pavement being designed:

4.5.1.1. Using the appropriate roadway classification, determine the corresponding EDLA (Table 4.1).

4.5.1.2. Determine the Serviceability Index (SI) of the roadway classification (Table 4.2).

4.5.1.3. Select the proper nomograph:

Example: Figure 4.1 Flexible Pavements with SI = 2.0

Example: Figure 4.2 Flexible Pavements with SI = 2.5

NOTE: Original nomographs required are available from Transportation and Engineering.

4.5.1.4. Using subgrade CBR or R-Value test results and EDLA, determine the SN from the appropriate design nomograph.

4.5.1.5. Once the Structural Number (SN) has been determined, the design thicknesses of the pavement structure can be determined by the general equation:

SN = a1D1 + a2D2 + a3D3 + ...

where

a1 = Hot Mix Asphalt (HMA) strength coefficients

a2, a3, an = strength coefficients of additional pavement components

D1 = thickness of Hot Mix Asphalt (HMA) (inches)

D2, D3, Dn = thickness of additional pavement component sections

The strength coefficients for various components of the pavement structure are given in Table 4.4.

The component thickness selected must meet two conditions:

a. Total HMA thickness selected cannot be less than the minimum specified in Table 4.3. for the roadway classification.

b. The base course thickness selected cannot exceed 2.5 times the HMA thickness selected, with a maximum thickness of eight (8) inches.

4.5.1.6. The design must reference any mitigative measures required when the subbase and / or subgrade contains cohesive or expansive soils. Design reports recommending permeable layers such as untreated aggregate base course in the pavement system, must

present the measures to be used to ensure adequate drainage of such layers, and to maintain segregation of the layers from the fine-grained soils. If cohesive or expansive soil mitigation is required, the soil stabilization shall extend from back of sidewalk to back of sidewalk. It is required that soils with R-values less than 10 or Plasticity Index greater than 15 be stabilized. Stabilization is for a minimum of the upper twelve (12) inches below the bottom asphalt pavement layer, and shall be included in the depth of treatment.

4.5.2 Rigid Pavements: This procedure has been deleted.

4.6. Material Specifications

The Specifications presented in this section are performance oriented. The County's objective in setting forth these Specifications is to achieve an acceptable quality of roadway structures. All sources for the mined or manufactured materials must be annually approved by Transportation and Engineering as having met the appropriate materials performance specifications. This approval is a condition of using those material sources for ~~public~~ improvement construction. For the purpose of these Standards, ~~public~~ improvements are all roadway improvements (both public and private), sidewalks, curbs and gutters, appurtenant drainage basins or structures, storm sewer and their access ways, other public works within Jefferson County Right-of-Way, and required stormwater detention structures built on private property and maintained by the property owner(s).

4.6.1. Violations of Approval Conditions

4.6.1.1. Random Testing. Transportation and Engineering may order random tests of materials used in County public improvements and for all private street/roads and non-maintained streets/roads in County ROW to verify compliance with material specifications. These tests are in addition to the requirements of the roadway inspection and testing procedures.

4.6.1.2. Any and all material used to construct public improvements that is not from a certified source, or that is from a certified source and fails one or more random material test, may be subject to complete removal as a condition of County acceptance of that public improvement. Additional tests will be required to confirm the existence and extent of the sub-standard material prior to the initiation of remedial action. The extent of the material to be removed will be at the discretion of Transportation and Engineering.

4.6.2. Use of Materials Not Listed in Section 4.6. Materials in this section and provided with a set of specifications are those deemed to be the primary structural materials commonly or typically used in public improvements. Ancillary public improvement materials such as manufactured paints and coatings, bonding agents, sealers, fabrics or gaskets, insulating materials, etc., should be in compliance with CDOT material specifications for the appropriate material employed. Alternative materials for construction may be proposed for use. Decisions on acceptability of alternative materials will be made by Transportation and Engineering.

4.6.3. Material Specifications

4.6.3.1. Hot Mix Asphalt: This shall comply with material specifications for PG Binders and asphalt mixes in accordance with CDOT's most recent edition of Standard Specifications for Road and Bridge Construction, 702 and 703. This is hereby referred to as "CDOT Standard Specifications".

4.6.3.2. Stone Mastic Asphalt (SMA): SMA mix shall comply with CDOT Standard Specifications as referenced in Section 4.6.3.1. SMA shall be placed as a 2-inch top lift on all new arterial and collector roads and streets. Local roads and streets may be constructed with all HMA. New acceleration and deceleration lanes added to existing arterials or collectors shall match the existing asphalt mix, whether HMA or SMA.

4.6.3.~~2~~3. Aggregate Base Course Material. This material shall consist of hard, durable particles or fragments of stone or gravel, crushed to required sizes, containing an appropriate quantity of sand or other finely-divided mineral matter which conforms to the requirements of AASHTO M 147, and to Section 703.03, CDOT Standard Specifications.

Specifications. In addition, the material must have an R-value of 78 or greater, or a CBR of 80+, and must be moisture stabilized. Moisture stability is determined by R-value testing which shows a drop of 12 points or less in R-value between exudation pressures of 300 psi and 100 psi.

Only aggregate from sources approved by the Transportation and Engineering shall be used.

Table 4.5 Aggregate Base Course Materials

Sieve Size	Mass Percent Passing Square Mesh Sieves	
	Class 5	Class 6
2"	100	
1"	95 - 100	100
3/4"	—	95
#4	30 - 70	30 - 65**
#8	—	25 - 55
#200*	03 - 15	03 - 12**
Liquid Limit (LL)	30 Max.	30 Max.

**ASTM (C117)*

***For gravel shoulders, No. 200 shall be 9-12 and No. 4 shall be 30-50.*

Base course may be used only where the base can daylight in barrow ditches or where the subgrade consists of material classifying as GM, GW, GP, SM, SW, or SP using the Unified Soil Classification System.

4.6.3.~~3~~4. Cement Treated Aggregate Base Course. This material shall consist of a mixture of aggregate materials, Portland cement and water as outlined in Section 304 of the CDOT Standard Specifications. Acceptable aggregates include CDOT Classes 5 and 6. Other aggregates may be used, if previously approved by Transportation and Engineering.

The materials to be used in construction shall be tested and a mix design submitted to the Transportation and Engineering. As a minimum, the mix design report shall contain a description of material sources, gradations and Atterberg limits of aggregates, cement type, Proctor compaction curves and unconfined compressive strength results for each mix, strength versus cement content curves, a design mix and special construction procedures recommended. Testing shall be in accordance with appropriate AASHTO specifications. Minimum in-place thickness for cement treated aggregate base course shall be twelve (12) inches.

To be approved, the mix shall have a seven-day compressive strength of at least 650 psi and no more than 1,000 psi. The minimum acceptable cement content shall be five percent by weight. Only mix designs approved by Transportation and Engineering shall be used. Approvals are required on a project basis, or an annual basis for suppliers, prior to issuing construction permits.

4.6.3.~~4~~5. Lime Treated Subgrade: This Material consists of a mixture of native or imported soils, hydrated or quick lime and water as outlined by ASTM Specification C977, CDOT Standard Specification 307.

The materials to be used in construction shall be tested and a mix design submitted to Transportation and Engineering for approval. As a minimum, the mix design report shall contain a description of material sources, gradation and Atterberg limits of native soils, Atterberg limits, pH and five day, 100°F cure unconfined compressive test results for each mix, strength versus lime content curves, a design mix and special construction procedures recommended. Testing shall be in accordance with appropriate AASHTO methods.

To be approved, the mix shall meet the following requirements:

1. Minimum pH of 12.3 after completion of initial mixing.
2. Plasticity Index less than 6, per ASTM D4318.
3. Minimum hydrated lime of 5.0% dry weight, per ASTM D3.

4. Minimum unconfined compressive strength shall be 200 psi, per ASTM D1633.
5. Sulfate concentrations not to exceed .5%

Note: Field validation shall be required after soil blending occurs during construction.

Only mix designs approved by Transportation and Engineering shall be used. Approvals are required on a project basis prior to issuing construction permits. Minimum in-place thickness for this material shall be twelve (12) inches.

4.6.3.~~5~~6. Lime/Fly-Ash Stabilized: This material consists of a mixture of native or imported soils, hydrated or quick lime, Class "C" Fly-Ash, and water as outlined by ASTM Specification C977, CDOT Section 307.

The materials to be used in construction shall be tested and a mix design submitted to the Transportation and Engineering for approval. As a minimum, the mix design report shall contain a description of material sources, gradation and Atterberg limits of native soils, Atterberg limits, pH and five-day unconfined compressive test results for each mix, strength versus lime/fly-ash content curves, a design mix and special construction procedures recommended. Testing shall be in accordance with appropriate AASHTO methods.

To be approved, the mix shall meet the following requirements:

1. Plasticity Index less than 6, per ASTM D4318.
2. Minimum unconfined compressive strength shall be 200 psi, per ASTM D1633.
3. Sulfate concentrations not to exceed .5%.

NOTE: Field validation may be required after soil blending occurs during construction.

Only mix designs approved by Transportation and Engineering shall be used. Approvals are required on a project basis prior to issuing construction permits. Minimum in-place thickness for this material shall be twelve (12) inches.

4.6.3.~~6~~7. Cement Stabilized Subgrade. This material consists of a mixture of native or imported soils, Portland cement and water.

The materials to be used on construction shall be tested and a mix design submitted to Transportation and Engineering for approval. As a minimum, the mix design report shall contain a description of material sources, gradation and Atterberg limits of native soils, Atterberg limits, pH and five-day unconfined compressive test results for each mix, strength versus cement content curves, a design mix and special construction procedures recommended. Testing shall be in accordance with appropriate AASHTO methods.

To be approved, the mix shall meet the following requirements:

1. Minimum Portland cement of 3.0% dry weight per ASTM D3.
2. Minimum unconfined compressive strength shall be 200 psi, per ASTM D1633.
3. Sulfate concentrations not to exceed 0.5%.

NOTE: Field validation may be required after soil blending occurs during construction.

Only mix designs approved by Transportation and Engineering shall be used. Approvals are required on a project basis prior to issuing construction permits. Minimum in-place thickness for this material shall be twelve (12) inches.

Chapter 5

Construction Specifications and Standards

5.1 Construction Specifications

The Permittee agrees to adhere to all construction specifications set forth in the latest edition of the Jefferson County Land Development Regulation, the Jefferson County Transportation Design and Construction Manual and the Colorado Department of Transportation

(CDOT) Standard Specifications for Road and Bridge Construction manuals.

5.1.1. Permits: All work performed within County Rights-of-Way and/or easements shall require the issuance of a street/road construction permit. Permits shall be obtained at the Jefferson County Transportation and Engineering office, located at 100 Jefferson County Parkway, Suite 3500, Golden, Colorado.

5.1.1.1. Any permit issued shall pertain only to construction within the County-owned Right-of-Way and is in no way considered a permit to enter on any private property adjacent to such Right-of-Way nor to alter or disturb any facilities or installations existing within the Right-of-Way which may have been installed, and are owned, by others.

5.1.1.2. Permits, when issued, shall be valid for a period of ninety (90) calendar days, and may be renewed for one (1) additional ninety (90) calendar day period, providing the renewal is obtained (renewal may be obtained by telephone) prior to the permit expiration date. Failure to obtain a renewal as stated herein will require obtaining a new permit and payment of applicable fees.

5.1.1.3. Any permit determined to be without an adequate bond as required in Section 5.1.2. below, shall be subject to immediate revocation by Transportation and Engineering.

5.1.2. Bonds: A non-cancellable permit bond shall be required for Right-of-Way Use and Construction Permits and License Agreements Section of the County Policies and Procedures for Streets and Roads.

5.1.3. General Specifications:

5.1.3.1. Any work done to a street/road or other County property under a permit shall result in the street/road or other property being returned to a condition equal to or better than original, within the limits of careful, diligent workmanship, good planning, and quality materials, with said work being accomplished in the least possible time and with the least disturbance to the normal functioning of the street/road or other property.

5.1.3.2. All backfill material, compaction, and resurfacing of any excavation made in the County property shall be done in accordance with specifications and standards approved by and on file with Transportation and Engineering.

5.1.4. Road Closures: Normally, only one side of a public street/road may be blocked at any given time. Should operating conditions require complete closure, advance approval of the closing of a public street/road must be obtained from Transportation and Engineering or advance approval of the closing of a private road must be obtained from Planning and Zoning. The permittee shall notify the appropriate fire protection district, the Jefferson County Sheriff's Department, and the Colorado State Patrol concerning exact location of barricades and dates traffic will be impeded. Barricades shall be maintained by the responsible contractor.

5.1.5. Utility Installations:

5.1.5.1. Underground: All utility lines, including Cable TV, shall be installed a minimum of two (2) feet below ground surface, or proposed roadway elevation, whichever is lower. This requirement is applicable throughout the Right-of-Way, including ditch lines and/or borrow pits. Exceptions may be granted by Transportation and Engineering where warranted and upon prior written request and approval.

5.1.5.2. Overhead: A minimum ground clearance of 18 feet 0 inches shall be provided where overhead utility lines cross public roads and streets. The clearance shall be measured at the lowest point where the line crosses the traveled portion of the road and/or street.

5.1.6. Base Course: All aggregate base course shall meet CDOT Class 6 Specifications, or an acceptable base course predicated on specific site conditions as approved by Transportation and Engineering. Native material is unacceptable as base course.

5.1.7. All concrete shall be in conformance with the appropriate class as specified in Section 601 of the CDOT Standard Specifications. A combination cure-sealer shall be used for concrete flatwork. Provide adequate texture by means of a moderately heavy broom finish to surfaces prior to applying the cure-sealer. The product shall be Dayton Superior Cure &Seal LV 25% J20 UV or approved equal. Apply two coats per manufacturer's instructions to all exposed surfaces, with the second coat applied at right angles to the first for complete coverage. The temperature range of application is 35 to 90 degrees F. Concrete shall not be left exposed for more than one hour between the time finishing is completed and commencement of curing treatment.

5.1.7.1. Concrete may be placed by machine methods provided that all finish lines are within 1/8" ± tolerance of the lines shown on the plans. The flowline must be free draining.

5.1.7.2. One-half (1/2) inch expansion joint material shall be installed when abutting any existing concrete or a fixed structure.

5.1.7.3 Median Cover Material and Median Edging Patterned Concrete: Median cover material and median edging patterned concrete shall be colored concrete that is Davis color #5084 "Harvest Gold" or approved equal. The release agent shall be Concrete Coatings Stamp-TEK ™ liquid release or approved equal. The stamp pattern shall be Matcrete "UK Cobblestone" or equivalent. A combination cure-sealer containing silane shall be used for concrete flatwork. The cure-seal product shall be SpecChem Cure Shield EX or approved equal. Control joints are saw cut every 10 feet. Expansion joint material with a zip-strip shall be installed between the patterned concrete and the back of curb. Control joints and expansion joints shall be sealed with Sikaflex-2C or approved equal. Refer to STND-18 and STND-19 for details. Granular pre-emergent herbicide shall be placed in the areas that are to receive median cover.

5.1.7.4. Detectable Warnings on Concrete Curb Ramps: Detectable Warnings on concrete curb ramps shall be truncated domes of the dimensions shown on the plans. Domes shall be BRICK RED in color. Domes shall be prefabricated by the manufacturer as a pattern on embeddedable surface plates. Dome plates shall be set into wet concrete and shall not be glue or spray-on varieties. Detectable warning plates shall not be concrete pavers, masonry pavers, or cast-iron plates. Refer to STND-16 for details.

5.1.7.5. Waterproofing Membranes: Waterproofing membrane shall be placed on concrete bridge deck surfaces, and concrete box culverts per the waterproofing membrane detail. Surfaces to receive waterproofing membrane shall be thoroughly cleaned via sandblasting or high pressure water. The waterproofing membrane shall be a hot pour asphaltic material, with 55 pound (#55) minimum asphaltic based roll material immediately placed on top. Refer to STND-17 for details.

5.1.8.1 Storm Sewer Pipe: Within County Right-of-Way and/or easements, all storm sewer pipe shall be minimum Class II Reinforced Concrete Pipe (RCP) in accordance with ASTM C-76-03, C-506-02 or C-507-02 or HP Storm Pipe. Actual depth of cover, live load, and field conditions may require structurally stronger pipe. CSP and HDPE pipe, in accordance with manufacturer's specifications, are only permitted in privately owned and maintained installations and shall be located within County drainage easements.

5.1.8.2 All new or repaired storm sewer pipe and associated structures within County Right-of-Way and/or easements shall be constructed with trace wire and test locations. Installation shall be tested for operation and documented with Form Letter "T" in accordance with Jefferson County Land Development Regulation Section 33. Test boxes shall be placed behind curb and gutter if sidewalk is detached, and behind sidewalk if attached. See details for the tracer wire and test box installation 28-1 through 28-3.

5.1.9. Culverts: Within County Right-of-Way and/or easements, all culverts shall conform to the Storm Drainage Design and Technical Criteria.

5.1.10. Traffic Control Devices

All traffic control devices shall conform to the MUTCD and be approved by Transportation and Engineering prior to installation. Conformance to the following minimum materials specifications or approved equal is required. Traffic signals shall conform to CDOT standards.

5.1.10.1. Signs, Sign Posts, and Anchors: Sign faces, posts and ~~bases~~ anchors shall conform ~~be in conformance~~ with the following materials specifications. ~~All~~ N~~n~~onstandard signs ~~faces~~, posts, and anchors ~~bases must be approved by Transportation and Engineering. Nonstandard signs~~ will not be maintained by the County. Post anchors for sign installation after complete construction require approval by Transportation and Engineering.

5.1.10.1.1. Street Name Signs: Sign blanks shall be 6061 or 5052-H38 aluminum alloy 0.100 ~~.080~~ inches thick. Polyethylene plates (Polyplate) is not allowed. ~~(no polyplate allowed).~~ Facing shall be green, electrocut High~~Hi~~-Intensity reflective sheeting with white ~~Hi~~High-Intensity Prismatic grade retroreflective ~~sheeting~~ letters and numerals. Refer to STND-12 for details.

5.1.10.1.2. Regulatory and Warning Signs: Sign blanks shall be 6061 or 5052-H38 aluminum alloy ~~.10~~ 0.100 inches thick. High-Intensity prismatic grade retroreflective sheeting shall be used for the background color, and letters and numerals for ~~on~~ all regulatory ~~(i.e. stop, speed limit)~~ and warning signs. Refer to STND-12 for details.

5.1.10.1.3. Sign Posts: ~~All sign posts shall be two (2) inch by two (2) inch galvanized telespar tube with .120 inch wall thickness, and three-eighths (3/8) inch holes drilled on one (1) inch centers, all sides over full length, ten (10) feet in length. U-posts are not allowed.~~ All sign posts shall be two (2) inch by two (2) inch galvanized TELESPAR® (or equivalent) ~~telespar~~ tube with 12 Gauge (0.105 ~~.120~~ inch wall thickness), and ~~three-eighths (3/8)~~ 7/16 inch pre-punched holes ~~drilled~~ on one (1) inch centers, all sides over full length, ten (10) feet in length. U-posts are not allowed.

5.1.10.1.4. Sign Post Bases: ~~All sign post bases shall be twist resistant mounting for telespar type post consisting of a steel angle (1/4" x 2 1/2" x 2 1/2" x 24") with a formed and welded steel plate (1/8" x 10" x 15"), used with a compression fit V-lock wedge of 1/8 inch galvanized steel. The wedge must have a one-half (1/2) inch hole drilled in one side for removal.~~ All sign post anchors shall be anchored securely in the soil or concrete to create a breakaway system. All sign post anchors shall be 2.25 inch x 2.25 inch perforated square tubing, galvanized steel, TELESPAR ® (or equivalent), a minimum of 3 feet in length. Each tube section shall be 12 Gauge (0.105 inch wall thickness) with 7/16 inch diameter pre-punched holes on 1-inch centers, all sides over full length. The anchor tubing shall be twist resistant and allow mounting of a one-size smaller TELESPAR ® (or equivalent) sign post. The anchor shall be driven into the soil no less than 30 inches. The sign post shall be inserted 8 inches inside the anchor tubing and double bolted in place prior to covering. Each bolt shall be a Hex Head with a Washer and matching Hex Nut. Bolts shall be secured at the exposed top of the anchor base and placed at opposite tube sides, 90 degrees apart. Signs to be placed in concrete medians or islands shall have the anchor driven inside of a 6-inch Schedule 40 PVC sleeve, with the sleeve measuring the thickness of the concrete plus 1-inch, and secured to the post in the same fashion as described in 5.1.10.1.3. The PVC sleeve shall be embedded in the surrounding concrete when the concrete is placed. Sign post anchors driven in soil not within concrete medians or islands shall be anchored in the same fashion without the PVC sleeve. Refer to STND-13 for details.

5.1.10.2. Pavement Marking: ~~Specified~~ P~~p~~avement marking materials shall be used as specified for the service life, type, and ~~at~~ locations as identified below.

5.1.10.2.1. Temporary Application, Construction, or Detours: Waterborne paint (High Build) shall be used for short duration striping of lane lines, channelizing lines, edge (fog) lines, and centerlines. The same waterborne paint may be used for crosswalks and stop (bar) lines as deemed necessary. Stencil markings, such as symbols or arrows, shall not be placed for temporary use unless approved by the engineer.
~~3M Stamark 5730 preformed plastic marking material or an approved equivalent shall be used for crosswalks, stop bars, symbols (i.e. turn arrows) and striping for separation of turn and through lanes.~~

5.1.10.2.2. Permanent Application: Epoxy paint shall be used for striping of lane lines, channelizing lines, edge (fog) lines, and centerlines. Preformed Thermoplastic Pavement Markings shall be used for crosswalk and stop (bar) line markings, railroad (RR) crossings, words, symbols, and arrows. The thickness of all Preformed Thermoplastic Pavement Markings shall be 125 mils. Preformed Plastic Marking Tape (Type I), may be used in lieu of Preformed Thermoplastic Pavement Markings, if approved by Transportation and Engineering prior to installation. Preformed Plastic Marking Tape shall be 3M™ Stamark™ 5730 (White), 3M™ Stamark™ A270ES (White), or approved equivalent.~~Preformed plastic marking material or reflectorized paint shall be used for all other pavement marking. Use of thermoplastic pavement marking is not permitted.~~

5.1.10.3. Curb Ramps: All required curb ramps shall conform to current CDOT M&S Standard Plans and be approved by Transportation and Engineering.

5.1.10.4. Bike Racks: All required bike racks shall conform to Association of Pedestrian and Bicycle Professionals "Essentials of Bike Parking: Selecting and Installing Bike Parking that Works".

5.2 Construction Standards

All construction within County Right-of-Way and/or easements shall be in conformance with current CDOT M & S Standards and the following County construction standards.

Standard Number	Description
1	Curb and Gutter
2	Combination Curb, Gutter and Sidewalk
3	6" Vertical Curb, Gutter and Attached Sidewalk
4	6" Vertical Curb, Gutter and Detached Sidewalk
5	Typical Intersection Crosspan
6	Driveway Section for 6" Vertical Curb and Gutter
7-1 and 7-2	~~Optional~~ Concrete Driveway Sections for Combination Curb, Gutter and Sidewalk (Type 2 and Type 3)
8	Driveway/Private Road Approaches ~~for Roads~~=
9	Typical Median Designs
10	Concrete Joint Details
~~11~~	~~Asphalt Street/Road Patchback~~
11	Raised Crossing Details
12	Speed Hump Installation
13	Asphalt Street/Road Patchback
14	Road and Street Name Signs
~~12~~	~~Road and Street Name Signs~~
~~13~~15	Sign Posts and Bases
~~14~~16	Typical Arterial/Major Collector Street Lighting
~~15~~17	Street Name Sign and Bracket on Traffic Signal Pole
18	Waterproofing Membranes for Concrete Box Culvert
19	Waterproofing Membranes for Bridge Deck
20	Median Cover Material Patterned Concrete
21	Median Edging Patterned Concrete
22 ~~16~~	Zone 1 Foothills / Mountain Area Preliminary Pavement Design

23-1 and 23-2 ~~17~~	Zone 2 Dipping Bedrock Area Preliminary Pavement Design Attached and Detached Sidewalks in ROW
24 ~~18~~	Zone 3 Front Range Area Preliminary Pavement Design
25 ~~19~~	Design Zone Preliminary Pavement Sections
26-1	Signal Poles Design Information
26-2	Signal Poles General Layout
26-3	Signal Poles Maximum Loading Information (1)
26-4	Signal Poles Maximum Loading Information (2)
26-5	Signal Poles Details (1)
26-6	Signal Poles Details (2)
26-7	Signal Poles Caisson Details (1)
26-8	Signal Poles Caisson Details (2)
26-9	Signal Poles Caisson Details (3)
26-10	Signal Pole and Mast Arm Mounting Details (1)
26-11	Signal Pole and Mast Arm Mounting Details (2)
26-12	Traffic Signal Pull Box
27-1, 27-2 and 27-3	Flashing Beacon and Sign Installations
28-1, 28-2, and 28-3	Utility Wire Installation Location – Storm Sewer

Chapter 6

Transportation Studies

6.1 Requirements for Transportation Studies (TS)

All traffic data collected must align with industry best practices to ensure consistency across the County. The below criteria must be met:

- Locations for traffic data collection shall be determined at pre-application or equivalent meeting with Jefferson County Staff and cater to the unique circumstances of each development application. Developments with local impacts will have fewer intersections to analyze whereas regional impacts will require a greater number of intersections to be analyzed.
- Vehicle volumes must be collected for at least a 24-hour period on a Tuesday, Wednesday, or Thursday and shall not be collected during inclement weather events, holidays, or adjacent to County holidays (Thanksgiving,

Christmas, New Years, etc.). Land uses with weekend peak-hour volumes shall collect at least one weekday and full weekend volumes.

- Bicycle and/or pedestrian volumes will be required in Activity Centers as defined by the Jefferson County Comprehensive Master Plan or with proposed land uses that foster active modes of transportation. Additional vulnerable roadway users, such as equestrians, children, or seniors will require special consideration if nearby land uses are conducive to a higher volume of vulnerable roadway users.
- Transportation & Engineering may request additional data collection or Measures of Effectiveness as identified in CDOT's Traffic Analysis and Forecasting Guidelines for unique site-specific or off-site conditions.

All traffic projections must use the latest addition of the ITE Trip Generation Manual.

6.1.1 The TS categories are as follows:

Transportation Information: Transportation Information shall be submitted for any development that generates fewer than 150 vehicle-trips per day. The submitted information will describe the proposed land use and estimate the expected number of daily vehicle trips. If submitting for a rezoning, provide a comparison of the existing land use and zoning to the most intense land use under the proposed zoning. If submitting for any other application type, provide a comparison of the existing land use compared to the proposed land use. This comparison shall be performed using the ITE Trip Generation Manual and/or by providing support for the expected vehicle usage of the site. The Transportation Information shall also describe any other relevant information that would impact transportation operations and safety.

Trip Generation Memorandum: A Trip Generation Memorandum (TGM) is required when the land uses proposed with a development are expected to generate between 150 and 800 vehicle-trips per day. The TGM should show a computation of trips generated from the proposed land use(s). The TGM for a proposed rezoning should also include a computational comparison of the maximum possible number of trips generated from the proposed land uses and the maximum possible trips generated from existing and allowed land uses. Include a table summarizing trip generation estimates.

Transportation Analysis: A Transportation Analysis (TA) is required during a rezoning to determine the amount and/or distribution of traffic generated from a proposed development that is expected to generate 800 average daily vehicle-trips or more. The TA should show a computational comparison of the maximum possible trips generated from the proposed land use(s) compared to the number of maximum possible trips generated from existing zoning. It should also include a percentage change in the average daily traffic (ADT) and peak hour traffic of adjacent roadways. The analysis should conceptually address potential onsite and offsite improvements that may be necessary to mitigate traffic impacts from the proposed development, including improvements that may already be required by County regulations.

Transportation Impact Study: A Transportation Impact Study (TIS) is required during a Site Development Plan (SDP) or Plat process when a proposed development is expected to generate 800 average daily vehicle-trips or more. While the trip generation from a proposed development is the main quantitative threshold, existing transportation issues such as a high crash location, complex intersection geometrics or other specific problems or deficiencies may also necessitate a TIS. The scope of the TIS should be agreed upon by the County and the applicant during the Preliminary Application process. The study should address any onsite and offsite improvements that may be necessary to mitigate traffic impacts from the proposed development. Required improvements may include the addition of traffic signals, turning lanes, and bicycle/pedestrian facilities, including any other improvements which may be suggested by the study.

Letter of Conformance with an Approved TIS: If a development in the Site Development Plan process is expected to generate more than 800 new vehicle trips, and there is an approved TIS on file from the last 3 years for the overall or regional development, a letter of conformance describing that the land uses proposed in the development match those assumed in the overall TIS and a copy of that TIS are required. This letter of conformance must confirm all current County regulations are met.

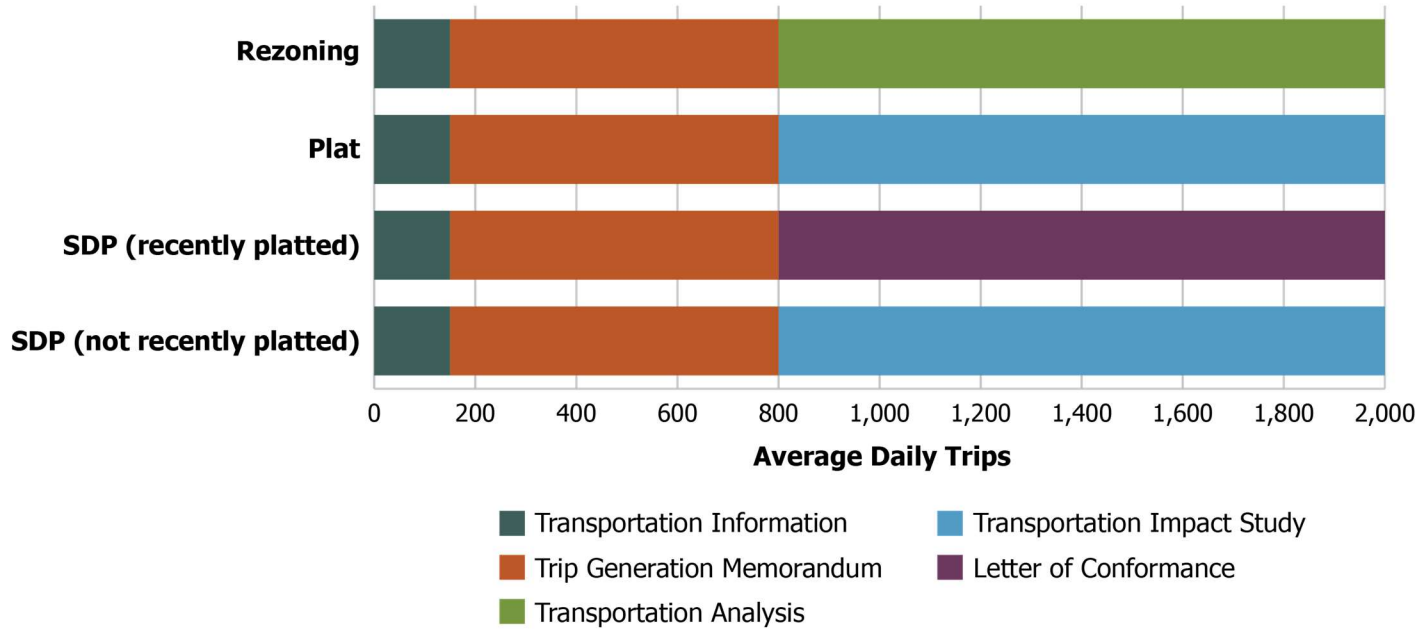

Transportation Information

6.2.1 Responsibility

General: The applicant is responsible for providing trip generation information, from the latest addition of the ITE Trip Generation Manual, when proposing a development generating below 150 vehicle trips.

Review Process: Transportation Information for a proposed development will undergo an iterative review process in accordance with the Land Development Regulation. The applicant shall provide a letter identifying changes to the Transportation Information with each re-submittal.

Certification: The Transportation Information should be prepared under the supervision of a qualified and experienced transportation professional who has training in traffic and transportation engineering or planning. Such supervision is not required if applicant has access to the ITE Trip Generation Manual.

6.2.2: Format

Transportation Information should be presented in tables, maps, and diagrams in lieu of a narrative, for clarity and ease of review. See Appendix A detailing the format for providing Transportation Information.

6.3 Trip Generation Memoranda

6.3.1 Responsibility

General: The applicant is responsible for providing trip generation computation when proposing a development generating between 150 and 800 vehicle trips.

Review Process: The TGM for a proposed development will undergo an iterative review process in accordance with the Land Development Regulation. The applicant shall provide a letter identifying changes to the TGM with each re-submittal.

Certification: The TGM shall be prepared under the supervision of a qualified and experienced transportation professional who has specific training in traffic and transportation engineering or planning.

6.3.2 Format

The TGM data should be presented in tables, graphs, maps, and diagrams in lieu of a narrative, for clarity and ease of review. See Appendix A detailing the format for providing Trip General Memoranda.

6.4 Responsibility for Transportation Studies

General: The impacts from a proposed development as assessed in the TS are the primary responsibility of the applicant and their engineer.

Review Process: The TS for a proposed development will undergo an iterative review process in accordance with the Land Development Regulation. The applicant shall provide a letter identifying changes to the Transportation Study, if applicable.

Certification: The TS shall be prepared under the supervision of a qualified and experienced transportation professional who has specific training in traffic and transportation engineering and planning. All transportation operations and design work shall be completed under the supervision of an experienced professional in conformance with the State of Colorado requirements. The TS shall be signed and sealed by a registered professional engineer in the State of Colorado.

6.5Transportation Analyses

6.5.1 Responsibility

General: The applicant is responsible to demonstrate how transportation systems can accommodate the traffic generated by a proposed development or how the system can be improved to accommodate the traffic generated by the development.

Review Process: The TA for a proposed rezone will undergo an iterative review process in accordance with the Zoning Resolution. The applicant shall provide a letter identifying changes to the TA with each re-submittal.

Certification: The TA shall be prepared under the supervision of a qualified and experienced transportation professional who has specific training in traffic and transportation engineering or planning.

6.5.2 Format

Throughout the TA, data should be presented in tables, graphs, maps, and diagrams in lieu of a narrative, for clarity and ease of review. See Appendix A detailing the format for providing Transportation Analyses.

6.6 Transportation Impact Studies

6.6.1 Responsibility

General: The applicant and their engineer are responsible for mitigating the impacts from a proposed development as assessed in the TIS.

Review Process: The TIS for a proposed development will undergo an iterative review process in accordance with the Land Development Regulation. The applicant shall provide a letter identifying changes to the Transportation Study with each re-submittal of the TIS.

Certification: The TIS shall be prepared under the supervision of a qualified and experienced transportation professional who has specific training in traffic and transportation engineering and planning. All transportation operations and design work shall be completed under the supervision of an experienced professional in conformance with the State of Colorado requirements. The TIS shall be signed and sealed by a registered Professional Engineer in the State of Colorado.

6.6.2 Format

Throughout the TIS, data should be presented in tables, graphs, maps, and diagrams in lieu of a narrative, for clarity and ease of review. See Appendix A detailing the format for providing Transportation Impact Studies.

Definitions

AASHTO

American Association of State Highway and Transportation Officials, A Policy on Geometric Design of Highways and Streets, current edition.

ADT

Average Daily Traffic

All Weather Travel Surface

An all weather travel surface is defined as an improved surface that is designed to withstand all weather conditions for typical road use and able to support emergency vehicles. The surface is required to be constructed of concrete, asphalt, recycled asphalt or a minimum of 6-inches of class 6 road base.

Axle Load

The total load transmitted by all wheels on a single axle extending across the full width of the vehicle. Tandem axles 40 inches or less apart shall be considered as a single axle.

California Bearing Ratio

A measure of the ability of a soil or aggregate to resist the transmission of a vertical load in a lateral direction.

CDOT

Colorado Department of Transportation

Dip of Natural Terrain

The dip of the natural terrain refers to the direction at which the existing ground surface slopes downward. The direction of the dip should be drawn perpendicular to the existing contour lines.

Emulsified Asphalt Treated Base

A base consisting of a mixture of mineral aggregate and emulsified asphalt spread on a prepared surface to support a surface course.

Equivalent Single Axle Loads (ESAL)

A numerical factor that expresses the relationship of a given axle load to another axle load in terms of their effect on a serviceability of a pavement structure. All axle loads are equated in terms of the equivalent number of repetitions of an 18,000 pound single axle.

18k EDLA

18,000 pound single axle Equivalent Daily Load Applications (explained in “Axle Load” and “ESAL” above).

Flexible Pavement

A pavement structure which maintains contact with and distributes loads to the subgrade and depends upon aggregate interlock, particle friction, and cohesion for stability.

Flowline

The transition point between the gutter and the face of the curb. For a cross or valley pan, it is the center of the pan. Where no curb exists, the flowline will be considered the edge of the outside traveled lane.

Grade

Rate or percent of change in slope, either ascending or descending from or along the highway. It is measured along the centerline of the highway or access.

Lime Treated Subgrade

Subgrade consisting of a mixture of soil, hydrated lime and water, usually mixed in place and placed to support a pavement structure.

MUTCD

The Manual on Uniform Traffic Control Devices and the Colorado Supplement, current editions.

Mountains

See "Mountains" definition in the Zoning Resolution.

Passing Sight Distance

The visibility distance required to allow drivers to execute safe passing maneuvers in the opposing traffic lane of a two-lane, two-way highway.

Pavement Structure

The combination of subbase, base course and surface course placed on a subgrade to support the traffic load and distribute it to the roadbed.

a. Subbase: The layer or layers of specified or selected material of designed thickness placed on a subgrade to support a base course.

b. Base Course: The layer or layers of specified or selected material of designed thickness placed on a subbase or subgrade to support a surface course.

c. Surface Course: The uppermost component of a pavement structure designed to accommodate the traffic load, the top layer of which resists skidding, traffic abrasion, and the disintegrating effects of climate. The top layer is sometimes called "Wearing Course".

Plains

See "Plains" definition in the Zoning Resolution.

Plant Mixed Bituminous Base

A base consisting of mineral aggregate and bituminous material, mixed in a central plant, laid and compacted while hot, on a subbase or a subgrade, to support a surface course.

Plant Mixed Bituminous Pavement

A combination of mineral aggregate and bituminous material mixed in a central plant, laid and compacted while hot.

Regional Factor

A numerical factor expressed as a summation of the values assigned for precipitation, elevation, and drainage. This factor is used to adjust the structural number.

Roads

Public or private Rights-of-Way within the Mountain Area or as otherwise designated within this MANUAL.

Serviceability Index

A number indicative of the ability of the pavement to serve traffic at any particular time in its design life.

Sidewalk

A portion of a street designated for pedestrians and other vulnerable roadway users, in accordance with state law.

Signal Progression

Progressive movement of traffic at a planned rate of speed through adjacent signalized locations within a traffic control system without stopping.

Soil Support Value

A number which expresses the relative ability of a soil or aggregate mixture to support traffic loads through the pavement structure.

Speed Change Lane

A separate lane for the purpose of enabling a vehicle entering or leaving a roadway to increase (acceleration lane) or decrease (deceleration lane) its speed to a rate at which it can more safely merge or diverge with through traffic.

Stabilometer "R" Value

A numerical value expressing the ability of a soil or aggregate to resist the transmission of vertical load in a lateral or horizontal direction.

Stopping Sight Distance

The minimum sight distance necessary to enable a vehicle traveling at or near the design speed to stop before reaching a stationary object in its path.

Storage Lane

Additional lane footage added to a deceleration lane to store the maximum number of vehicles likely to accumulate during critical periods without interfering with the through lanes.

Streets

Public or private Rights-of-Way within the Plains Area or as otherwise designated within this MANUAL.

Strength Coefficient

A factor used for expressing the relative strength of each layer in a pavement structure.

Structural Number

A number derived from an analysis of roadbed and traffic conditions. A Weighted Structural Number is a Structural Number which has been adjusted for environmental conditions. A Weighted Structural Number may be converted to pavement structure thickness through the use of suitable factors related to the type of material being used in the pavement structure.

Traffic Analysis Period

A common analysis period (usually 20 years) used in geometric design.

Untreated Base Course

A layer or layers of base course without treatment of any kind.

Vulnerable Roadway User

Roadway users that are not protected by a vehicle or other shield while on a roadway and is at a greater risk for involvement in a serious injury or fatal crash. Vulnerable roadway users include, but are not limited to, bicyclists, pedestrian, and equestrians; those using mobility devices such as wheelchairs; those using micromobility devices such as electric scooters; and other forms of rolling such as roller blades and skateboards.

Appendix A:

Transportation Studies Formatting

A.1 Transportation Information Format:

Introduction and Summary

The purpose of the Transportation Information should be clearly stated. This section should concisely summarize findings and conclusions.

Proposed Development

Provide a description of the project site including size, location, current land use, intensity, existing zoning, proposed zoning (if applicable), and access roadways.

Trip Generation Comparison Table

Provide a trip generation comparison table showing the traffic generated from existing land use(s) compared to the maximum potential trip generation for land uses associated with the proposed development. The latest edition of ITE's Trip Generation Handbook provides guidance on how to select between rates and equations when both are available. The national published data provided by ITE should be used as starting points in estimating the amount of traffic by a specific building type or land use. If no trip generation rates nor equations are available from ITE's Trip Generation Handbook, traffic counts from similar site(s) should be provided as a basis for trip generation estimates. If no site(s) with similar land uses are available, an analysis of the proposed land use based on the site's capacity may be considered.

Table 1: Rezone Transportation Information

Land Use Type /Zoning (Type)	Land Use Type	ITE Code	Unit	Size	Vehicles per day
Existing Land Use					
Total					
Existing Maximum* Zoning					
Total					
Proposed Maximum* Zoning					
Total					
Additional Trips (Proposed Zoning Total minus Existing Zoning Total)					

Table 2: Change in Land Use Transportation Information

Land Use Type	Land Use Type	ITE Code	Unit	Size	Vehicles per day
Existing Land Use					
Total					

Proposed Land Use					
Total					
Additional Trips (Proposed Land Use Total minus Existing Land Use Total)					

Findings

Provide a summary of findings.

A.2 Trip Generation Memoranda Format:

Introduction and Summary

The purpose of the TGM should be clearly stated. This section should concisely summarize findings and conclusions.

Proposed Development

Provide a description of the project site including size, location, current land use, intensity, existing zoning, proposed zoning, and access roadways.

Existing Conditions

Current traffic volume counts including a minimum of 24 hours of data should be collected to determine existing traffic conditions in the study area. If the most recent traffic counts available are 3 years old or older, new traffic counts shall be collected.

Trip Generation Comparison Table

Provide a trip generation comparison table showing the traffic generated from existing land use(s) compared to the maximum potential trip generation for land uses associated with the proposed development. The latest edition of ITE's Trip Generation Handbook provides guidance on how to select between rates and equations when both are available. The national published data provided by ITE should be used as starting points in estimating the amount of traffic by a specific building type or land use. If no trip generation rates nor equations are available from ITE's Trip Generation Handbook, traffic counts from similar site(s) should be provided as a basis for trip generation estimates. If no site(s) with similar land uses are available, an analysis of the proposed land use based on the site's capacity may be considered.

Findings

Provide a summary of findings, including the percentage increase in average daily traffic (ADT) on adjacent roadways from existing conditions to proposed.

C. Example Outline

Trip Generation Memo

[Development Title]

Case Number: XX-XXXXXX XX

Applicant Information

[Name]

[Address]

[Phone Number]

[Email]

Report Author

[Name]

[Address]

[Phone Number]

[Email]

Date of Original Report: XX-XX-XXXX

Date of Revision: XX-XX-XXXX

Purpose of Analysis

Introduction

The purpose of this Trip Generation Memo is to evaluate the potential impacts of the proposed development to the surrounding transportation network.

Project Overview

[Description of the project site including size, location, current land use, intensity, existing zoning, proposed zoning, access roadways, and proposed development phasing. Site plan should not be included in this analysis.]

Existing Roadway System

[Include a description of the study area roadways and intersections including current traffic counts.]

Projected Transportation Impact

Trip Generation

[Description of publication or methodology used to generate daily and peak hour traffic volumes for the proposed development; trip reduction and internal trip capture rates and pass-by trips not applicable]

Table 1: Trip Generation Summary Table

Trip Generation Summary Table											
Land Use Type /Zoning (Type)	**Land Use Type**	**ITE Code**	**Unit**	**Size**	**Vehicles per day**	**AM Peak**			**PM Peak**		
						In	Out	Total	In	Out	Total
Existing Land Use											
Total											
Existing Maximum* Zoning											
Total											
Proposed Maximum* Zoning											
Total											
Comparison Table											
Zoning Additional Trips (Proposed Zoning Total minus Existing Zoning Total)											

*Maximum potential trip generation based on the existing and proposed zoning

Findings

[Summarize existing land use/proposed intended land use and existing/proposed zoning trip generation and potential impacts to the

transportation network]

Existing Land Use/Proposed Intended Land Use

Existing Zoning/Proposed Zoning

Appendix

[Insert any data used in analysis:]

Trip Generation Calculations

Traffic Counts

A.3 Transportation Analysis Format:

Introduction and Summary

The purpose of the TA should be clearly stated. This section should contain an Executive Summary that concisely summarizes the principal findings, conclusions, and recommendations of the TA.

Proposed Development

Provide a description of the land, parcel size and location within the county. Include a vicinity map showing the location of the project site in relation to the surrounding transportation network. The offsite as well as site specific development should be described. This includes a discussion of location, proposed zoning, land use and intensity. A site plan is not necessary within a TA.

Existing Area Conditions

Limits of the study area should be described in this section. The limits shall be mutually agreed to between the applicant and the County. Roadways that provide access to the site are included in this section. Current traffic volume counts should be collected to determine existing traffic conditions in the study area. If the most recent traffic counts available are 3 years old or older, new traffic counts shall be collected. These counts should include average daily traffic within the study area.

Projected Traffic

The main component of the TA is estimating the amount of traffic being generated from a proposed development. A trip generation comparison table showing computational comparison of the maximum possible trips generated from the proposed land uses and the maximum possible trips generated from existing and allowed land uses shall be provided. The latest addition of ITE's *Trip Generation Handbook* provides guidance on how to select between rates and equations when both are available. The national published data provided by ITE should be used as starting points in estimating the amount of traffic by a specific building type or land use. If no trip generation rates nor equations are available from ITE's Trip Generation Manual, traffic counts from similar site(s) should be provided as a basis for trip generation estimates. If no site(s) with similar land uses are available, an analysis of the proposed land use based on the site's capacity may be considered. Include a table summarizing trip generation estimates. Calculate the percentage increase in average daily traffic with the proposed development over the existing traffic.

Findings and Recommendations

Summarize the proposed development, its impacts, and the possible mitigation strategies.

C. Example Outline

Rezoning Transportation Analysis

[Development Title]

Case Number: XX-XXXXXX RZ

Applicant Information

[Name]

[Address]

[Phone Number]

[Email]

Report Author

[Name]

[Address]

[Phone Number]

[Email]

Date of Original Report: XX-XX-XXXX

Date of Revision: XX-XX-XXXX

[Cert Number/Seal and Signature of Certified Transportation Professional (PE, AICP-CTP, ITE-PTP] (If applicable)

Purpose of Analysis

Introduction

The purpose of this Transportation Analysis is to evaluate the potential impacts of the proposed zoning to the surrounding transportation network. If the proposed zoning is approved, the Applicant will be required to submit a Transportation Impact Study to determine specific mitigation measures and must satisfy County Land Development Regulations (LDR) and Transportation Design and Construction Manual Roadway Templates at the time of Site Development Plan (SDP) and/or Preliminary and Final Plat (PF).

Project Overview

[Description of the project site including size, location, current land use, intensity, existing zoning, and proposed zoning. Site plan should not be included in this analysis.]

Study Area

[Description of the study area and impacted roadways and intersections. The study area limits should be described and mutually agreed to between the applicant and the county. The study area should not include roadways proposed interior to the development.]

Existing Roadway System

[Include a description of the study area roadways and intersections including existing traffic counts, lane geometry, posted speed limits, current traffic control at intersections, presence of pedestrian and bicycle infrastructure, availability of on-street parking, and whether a roadway is private or public.]

Projected Transportation Impact

Trip Generation

[Description of publication or methodology used to generate daily and peak hour traffic volumes for the proposed development; trip reduction and internal trip capture rates and pass-by trips not applicable during rezoning]

Table 1: Trip Generation Summary

Trip Generation Summary Table											
Land Use Type /Zoning (Type)	**Land Use Type**	**ITE Code**	**Unit**	**Size**	**Vehicles per day**	**AM Peak**			**PM Peak**		
						In	Out	Total	In	Out	Total
Existing Land Use											

Total											
Existing Maximum* Zoning											
Total											
Proposed Maximum* Zoning											
Total											
Comparison Table											
Zoning Additional Trips (Proposed Zoning Total minus Existing Zoning Total)											

*Maximum potential trip generation based on the existing and proposed zoning

Analysis

[Summarize existing land use/proposed intended land use and existing/proposed zoning trip generation and potential impacts to the transportation network. Provide the percentage increase in average daily traffic (ADT) on adjacent roadways from existing conditions to proposed. Level of Service (LOS) calculations are not required with a TA.]

Existing Land Use/Proposed Intended Land Use

Existing Zoning/Proposed Zoning

Recommendations

[Summarize the anticipated public improvements and strategies and/or recommendations to mitigate potential negative impacts to the transportation network in the study area]

Table 2: Anticipated Public Improvements

Summary of the anticipated public improvements per County Land Development Regulations (LDR) and Transportation Design and Construction Manual Roadway Templates (shoulders, sidewalks, curb and gutter, bicycle infrastructure, etc.) if the zoning is approved and the applicant proceeds to subsequent development processes.

Location	Improvements

Table 3: Potential Mitigation Strategies

Summary of potential strategies and/or recommendations that show an ability to mitigate traffic impacts from the proposed rezoning to the study area.

[List strategies that can address potential impacts of increased trip generation from the proposed zoning. Impacts should be those that are common for the location type and the level of trip generation increase. Recommendations should generally indicate if strategy is feasible at the location indicated.]

Location	Strategy	Recommendation

Appendix

[Insert any data used in analysis]

Trip Generation Calculations

Traffic Counts

A.4 Transportation Impact Study Format:

Introduction and Summary

The purpose of the TIS should be clearly stated. This section should contain an Executive Summary that concisely summarizes the principal findings, conclusions, and recommendations of the TIS.

Proposed Development

Provide a description of the land parcel size, general terrain features and location within the county. Include a vicinity map showing the location of the project site in relation to the surrounding transportation network. The offsite as well as site-specific development should be described. This includes a discussion of land use and intensity, location, site plan and zoning. As required, primary and secondary access to existing streets should be proposed. Construction phasing should be introduced and addressed in this section.

Existing Area Conditions

Limits of the study area should be described in this section. The limits shall be mutually agreed to between the applicant and the County, during the Preliminary Application process or prior to submittal. Roadways that provide access to the site as well as future roadways included in the study area are included in this section. Existing intersections within the study area as well as geometrics and traffic signals should be identified. The existing and proposed land uses of the site should be identified. Current traffic volume counts should be collected to determine existing traffic conditions in the study area. If the most recent traffic counts available are 3 years old or older, new traffic counts shall be collected. These counts should include average daily traffic and intersection peak hour turning movements within the study area.

Background Traffic

Background traffic growth estimates should be based on the most recent regional Travel Demand Model available. Overly conservative projections of background growth will not be accepted. If a growth model is not available for the study area, a reasonable growth rate considering area development potential shall be agreed upon by the applicant and the County during the Preliminary Application process. Growth rates above 2% per year will not be considered.

Trips generated by other approved developments within the study area, that were not included in the traffic counts collected, may be added to the background growth and referenced in the TIS. However, the combined background growth rate from area development and growth modelling shall not exceed an average of 2% per year.

Projected Traffic

One of the most critical elements of the TIS is estimating the amount of traffic being generated. The latest edition of ITE's Trip Generation Handbook provides guidance on how to select between rates and equations when both are available. The national published data provided by ITE should be used as starting points in estimating the amount of traffic by a specific building type or land use. If no trip generation rates nor equations are available from ITE's Trip Generation Manual, traffic counts from similar site(s) should be provided as a basis for trip generation estimates. If no site(s) with similar land uses are available, an analysis of the proposed land use based on the site's capacity may be considered. Include a table summarizing trip generation estimates.

Trip Distribution: The direction from which traffic will access the site can vary depending on many factors such as the type of proposed development and the area which it will attract traffic, surrounding land uses and population and conditions of the surrounding street system. Document the methods and assumptions made in this section.

Trip Assignment: The final product of this process is total project generated trips, by direction and turning movement, on each segment of the TIS area roadway network. The assignment should reflect the horizon years and consider future conditions of the roadway. Typically, the County uses a 3-year projected and 20-year projected traffic volume. Additional horizon years may be necessary depending on proposed phasing.

Internal Trips: Trips captured internally by a proposed development may be applicable depending on the land use. The

internal capture rates used should be based on the current version of the ITE's Trip Generation Handbook.

Pass-by trips: Trip generation analysis yields the number of vehicle trips that a site is expected to generate at its driveways. A percentage of their trips are simply diverted from trips already passing by on the adjacent roadway system. Pass by trips diverted from a roadway should be rechecked if they represent more than 15% of the traffic volume on that roadway. Pass-by trips shall still be applied to the site's driveways and any local roadways between the site and the roadway from which the trips are diverted. Pass-by trip reductions should not be made to the overall trip generation prior to trip assignment.

Transportation Analysis

Capacity analysis is required for each of the major street and site access locations (signalized and un-signalized) within the study area. A clearer understanding of both the transportation related implications of the project and the necessary improvements to ensure acceptable operating conditions should result from this section of the TS. In addition, the following County plans and program and factors shall be considered in the transportation analysis: Major Thoroughfare Plan, Bicycle Plan and Traffic Impact Fee Program.

Factors:

- Safety
- Neighborhood Impacts
- School Zone Traffic Control
- Traffic Control Needs
- Transit Needs or Impacts
- Transportation Demand Management
- Circulation Patterns
- On-site Parking Adequacy and Off-site Parking Facilities
- Pedestrian and Bicycle Movements/Continuity of Facilities
- Other vulnerable roadway users applicable to proposed or nearby land uses
- Service and Delivery Vehicle Access
- Emergency and Fire Apparatus Access

Transportation Safety: The initial review of existing conditions within the TIS area shall include analysis of crash data from the 3 most recent years available. Any intersection experiencing Level of Service of Safety (LOSS) III or IV, or above average crashes on the state-specific Safety Performance Functions, will need additional analysis. The proposed site plan should ensure that the internal circulation system and external access points improve pedestrian and bicyclist safety and minimize vehicle/pedestrian and vehicle/bicyclist conflict points. Additional vulnerable roadway users shall be considered if applicable to a proposed land use or adjacent to existing land uses.

Transportation Operations: Impacts on transportation operations shall be measured based on the definitions contained in the current version of the *Highway Capacity Manual (Transportation Research Board)*. For each analysis period studied (typically 3 and 20 year periods) and for each phase of the project a projected total traffic volume must be estimated for each critical intersection and roadway segment being analyzed. The projected total traffic volumes (consisting of the summation of existing traffic, background growth traffic, background development traffic and site traffic) will be used in the next step-capacity analysis of future conditions.

Signalized Intersections: Level of Service (LOS) is based on roadway system characteristics that include:

- traffic volume
- lane geometry
- percentage of trucks
- peak hour factor

- number of lanes
- signal progression
- ratio of green time to cycle time (G/C)
- roadway grades
- parking conditions
- bicycle and pedestrian flows

The LOS categories are established in the *Highway Capacity Manual*. In general, LOS ratings of A to D are acceptable for the overall intersection and individual movements while E & F ratings must be mitigated. There are a number of software programs that can determine highway capacity.

Unsignalized Intersections: LOS for multi-way stop controlled intersections and driveway intersections must be determined by computing or measuring control delay. Where capacity analysis shows a LOS of D or worse for the overall intersection or any individual movements, mitigation must be provided. Mitigation could be a traffic signal, roundabout, turn restriction, or other measure to improve LOS. An analysis must be completed to determine the proposed measure mitigates the failing LOS. Any proposed all-way stop intersection must be justified using MUTCD's guidance on multi-way stop applications. Any newly signalized intersections must be justified using MUTCD Warrant 2 (Four-Hour Vehicular Volume). Alternatively, Warrant 3 (Peak Hour Volume) may be evaluated only if the unusual cases as defined in the MUTCD apply.

Roundabouts: In cases where LOS analysis indicates that an unsignalized intersection is expected to be LOS D or worse, a roundabout will be assessed before consideration will be given to a proposed signalized or multiway stop intersection. Factors for consideration of a roundabout include:

- availability of right-of-way
- crash history or potential
- traffic volume
- lane geometry
- number of lanes
- roadway grades
- parking conditions
- bicycle and pedestrian flows
- level of service

Each proposed location for a roundabout will be evaluated on a case by case basis. The capacity of a roundabout must be evaluated, and appropriate analytical software programs shall be utilized.

Parking: Utilizing ITE's Parking Generation Manual as a starting point, provide an estimate of how much parking the proposed development will generate. Parking utilization rates from similar sites may aid in this analysis.

Queueing: Provide an analysis of projected 95th percentile queues to determine adequacy of existing and proposed turn lane storage lengths, and whether any through-queues block adjacent intersections.

Improvement Analysis

The improvements required to accommodate existing, background and site generated traffic are summarized in this section. Intersections serving the development should be analyzed first. The analysis should include the following steps:

- Identification of critical movements and corresponding intersection approaches.
- Determine if the intersection needs new types of traffic control such as roundabout, signalization or multi-way stop control.

- Evaluation of each critical movement under potential scenarios of adding lanes, altering signal phasing, signal timing or lane use.
- Evaluation of signal locations, phasing and timing, with particular emphasis on corridor signal progression.
- Evaluation of queue lengths for both turn and through lanes to ensure adequate storage space.
- Identification of potential improvements within the contexts of Right-of-Way availability, intersection spacing, signal progression, County design standards and practical feasibility.

Findings & Recommendations

Summarize the proposed development, its impacts, and the proposed mitigation measures.

C. Example Transportation Impact Study Outline

Transportation Study

[Development Title]

Case Number: XX-XXXXXX SD/PF

Applicant Information

[Name]

[Address]

[Phone Number]

[Email]

Report Author

[Name]

[Address]

[Phone Number]

[Email]

Date of Original Report: XX-XX-XXXX

Date of Revision: XX-XX-XXXX

[Seal and Signature of Colorado Professional Engineer]

Page Break

Executive Summary

Table of Contents

List of Figures

List of Tables

Purpose of Analysis

Proposed Development

Project Location

[Insert vicinity map showing the location of the project site in relation to the surrounding transportation network]

Project Overview

[Description of the site including size, location, land use, intensity, existing zoning, proposed zoning, access locations and proposed development phasing.]

Existing Area Conditions

[Include diagrams and narrative of traffic counts collected]

Background Traffic

[Include reference to source Travel Demand Model, any nearby developments considered, and diagrams of 3-year and 20-year projections]

Projected Traffic

Trip Generation

[Description of publication or methodology used to generate daily and peak hour traffic volumes for the proposed development including any trip reduction considerations, internal trip capture rates and pass-by trips as applicable]

Trip Generation Summary

[Table including land use, intensity, ITE Code, daily traffic volume, peak hour: in, out and total traffic volumes.]

Trip Distribution

Pass-by Trips (if applicable)

Trip Assignment

3-Year Horizon

20-Year Horizon

Transportation Analysis

Level of Service

[LOS diagrams at all study area intersections]

Safety

[LOSS Analysis]

Intersection Controls

[Roundabout analysis, signal- or all-way-stop-warrant analysis]

Parking

[Include parking generation and availability]

Queueing

[Queueing analysis at study area intersections]

Improvement Analysis

[Describe any improvements needed to mitigate impacts]

Conclusion and Recommendations

[Summarize the proposed development including site location, proposed accesses, and trip generation.]

Appendices

Site Plan

Traffic Counts

Growth Calculations

Nearby Development Trip Estimates*

Trip Generation Sheets

LOS Worksheets (Synchro or equivalent)

Roundabout Analysis*

Signal and/or All-Way Stop Warrants*

LOSS Worksheets

Parking Generation Sheets

Queueing Analysis Worksheets

Signal Progression Analysis*

*as applicable

~~Table of Contents~~

~~1. Requirements for Transportation Studies~~

~~2. Responsibility for Transportation Studies~~

~~3. Transportation Study Format~~

~~Introduction & Summary~~

~~Proposed Development~~

~~Existing Area Conditions~~

~~Projected Traffic~~

~~Transportation Analysis~~

~~Improvement Analysis~~

~~Findings & Recommendations~~

~~Appendix~~

~~Example Report Outline~~

~~Bibliography~~

~~1. Requirements for Transportation Studies (TS)~~

~~*General:* In considering the transportation aspects of land development, it is important to determine early in the process if and when a Transportation Study (TS) will be required. The trip generation from a proposed development is the main quantitative threshold; however, existing transportation issues such as a high crash location, complex intersection geometrics or other specific problems or deficiencies may also necessitate a TS. A TS shall be required in accordance with the Submittal Requirements Section of the Land Development Regulation.~~

~~The TS categories are as follows:~~

~~**Transportation Analysis:** A Transportation Analysis may be required by Planning and Zoning to determine the amount and/or distribution of traffic generated from a proposed development. A transportation analysis is a computation of the traffic that is generated from a proposed development that is expected to generate less than 1000 average daily trips. The analysis should address any onsite and offsite improvements that may be necessary to mitigate traffic impacts from the proposed development. Required improvements may include the addition of turning lanes and bicycle/pedestrian facilities, including any other improvements which may be suggested by the analysis.~~

~~**Minor Transportation Study:** A Minor Transportation Study is required when a proposed development is expected to generate 1000 average daily trips per day or more, and the traffic impacts are localized as determined by Planning and Zoning. The study should address any onsite and offsite improvements that may be necessary to mitigate traffic impacts from the proposed development. Required improvements may include the addition of traffic signals, turning lanes, and bicycle/pedestrian facilities, including any other~~

~~improvements which may be suggested by the study.~~

~~**Major Transportation Study:** A Major Transportation Study is required when a proposed development is expected to generate 1000 average daily trips or more, and the traffic impacts are regional as determined by Planning and Zoning. The study should address any onsite and offsite improvements that may be necessary to mitigate traffic impacts from the proposed development. Required improvements may include the widening or realigning of existing streets; the addition of new intersections or interchanges; the addition of traffic signals, turning lanes, and bicycle/pedestrian facilities, including any other improvements which may be suggested by the study.~~

~~2. Responsibility for Transportation Studies~~

~~*General:* The impacts from a proposed development as assessed in the TS are the primary responsibility of the applicant and their engineer.~~

~~*Review Process:* The TS for a proposed development will undergo an iterative review process in accordance with the Land Development Regulation. The applicant shall provide a letter identifying changes to the Transportation Study, if applicable.~~

~~*Certification:* The TS shall be prepared under the supervision of a qualified and experienced transportation professional who has specific training in traffic and transportation engineering and planning. All transportation operations and design work shall be completed under the supervision of an experienced professional in conformance with the State of Colorado requirements. The TS shall be signed and sealed by a registered professional engineer in the State of Colorado.~~

~~3. Transportation Study Format~~

~~Introduction and Summary~~

~~The purpose of the TS should be clearly stated. This section should contain an Executive Summary that concisely summarizes the principal findings, conclusions and recommendations of the TS.~~

~~Proposed Development~~

~~Provide a description of the land parcel size, general terrain features and location within the county. The offsite as well as site specific development should be described. This includes a discussion of land use and intensity, location, site plan and zoning. As required, primary and secondary access to existing streets should be proposed. Construction phasing should be introduced and addressed in this section.~~

~~Existing Area Conditions~~

~~Limits of the study area should be described in this section. The limits shall be mutually agreed to between the applicant and the County. Roadways that provide access to the site as well as future roadways included in the study area are included in this section. Existing intersections within the study area as well as geometrics and traffic signals should be identified. The existing and proposed uses of the site should be identified in terms of various zoning categories of the County. The land use generating the most trips should be used for the analysis. Current traffic volume counts should be collected to determine existing traffic conditions in the study area. These counts may include those for street average daily traffic and for intersection peak hour turning movements.~~

~~Projected Traffic~~

~~One of the most critical elements of the TS is estimating the amount of traffic being generated. ITE's *Trip Generation Handbook* provides guidance on how to select between rates and equations when both are available. The national published data provided by~~

ITE should be used as starting points in estimating the amount of traffic by a specific building type or land use.

Computer Software: A number of computer software packages are available that are designed to either produce trip generation data or accept trip generation data for further analysis.

Trip Distribution: The direction from which traffic will access the site can vary depending on many factors such as the type of proposed development and the area which it will attract traffic, surrounding land uses and population and conditions of the surrounding street system. Document the methods and assumptions made in this section.

Trip Assignment: The final product of this process is total project generated trips, by direction and turning movement, on each segment of the TIS area roadway network. The assignment should reflect the horizon years and consider future conditions of the roadway. Typically, the County uses a 3 year projected and 20 year projected traffic volume. Additional horizon years may be necessary depending on proposed phasing.

Internal Trips: Trips captured internally by a proposed development may be applicable depending on the use. The internal capture rates used should be based on the current version of the ITE's *Trip Generation Handbook.*

Pass-by trips: **Trip generation analysis yields the number of vehicle trips that a site is expected to generate at its driveways. A percentage of their trips are simply diverted from trips already passing by on the adjacent roadway system. Pass by trips diverted from a roadway should be rechecked if they represent more than 15% of the traffic volume on that roadway.**

Transportation Analysis

Capacity analysis is required for each of the major street and site access locations (signalized and un-signalized) within the TS area. A clearer understanding of both the transportation related implications of the project and the necessary improvements to ensure acceptable operating conditions should result from this section of the TS. In addition, the following County Plans and Program and Factors shall be considered in the transportation analysis: County Plans and Program, Major Thoroughfare Plan, Bicycle and Pedestrian Plan and Traffic Impact Fee Program.

Factors:

- Safety
- Neighborhood Impacts
- School Zone Traffic Control
- Traffic Control Needs
- Transit Needs or Impacts
- Transportation Demand Management
- Circulation Patterns
- On-site Parking Adequacy and Off-site Parking Facilities
- Pedestrian and Bicycle Movements/Continuity of Facilities
- Service and Delivery Vehicle Access
- Emergency and Fire Apparatus Access

Transportation Safety: The initial review of existing conditions within the TS area should include analysis of crash data from the 3 most recent years. Any intersection experiencing a crash rate of over 1 per million entering vehicles will need additional analysis. The proposed site plan should ensure that the internal circulation system and external access points

~~improve pedestrian and bicyclists safety and minimize vehicle/pedestrian and bicyclists conflict points.~~

~~*Transportation Operations:* Impacts on transportation operations shall be measured based on the definitions contained in the current version of the *Highway Capacity Manual (Transportation Research Board)*. For each analysis period studied (typically 3 and 20 year periods) and for each phase of the project a projected total traffic volume must be estimated for each critical intersection and roadway segment being analyzed. The projected total traffic volumes (consisting of the summation of existing traffic, background growth traffic, background development traffic and site traffic) will be used in the next step-capacity analysis of future conditions.~~

~~*Signalized Intersections:* Level of Service (LOS) is based on roadway system characteristics that include:~~

- ~~traffic volume~~
- ~~lane geometry~~
- ~~percentage of trucks~~
- ~~peak hour factor~~
- ~~number of lanes~~
- ~~signal progression~~
- ~~ratio of green time to cycle time (G/C)~~
- ~~roadway grades~~
- ~~parking conditions~~
- ~~bicycle and pedestrian flows~~

~~The LOS categories established in the *Highway Capacity Manual*. In general, LOS ratings of A to D are acceptable while E & F ratings must be mitigated. There are a number of software programs that can determine highway capacity.~~

~~*Unsignalized Intersections:* LOS for multi-way stop controlled intersections and driveway intersections must be determined by computing or measuring control delay. Where capacity analysis shows a LOS of D or worse, an analysis should be completed to determine if a signal, roundabout, or turn restriction might be needed.~~

~~*Roundabouts:* In cases where LOS analysis indicates that an unsignalized intersection is expected to be LOS D or worse, a roundabout will be assessed before consideration will be given to a proposed signalized or multiway stop intersection. Factors for consideration of a roundabout include:~~

- ~~availability of right-of-way~~
- ~~crash history or potential~~
- ~~traffic volume~~
- ~~lane geometry~~
- ~~number of lanes~~
- ~~roadway grades~~
- ~~parking conditions~~
- ~~bicycle and pedestrian flows~~
- ~~level of service~~

~~Each proposed location for a roundabout will be evaluated on a case by case basis. The capacity of a roundabout must be evaluated,~~

~~and appropriate analytical software programs shall be utilized.~~

~~Improvement Analysis~~

~~The improvements required to accommodate existing, background and site generated traffic are summarized in this section. Intersections serving the development should be analyzed first. The analysis should include the following steps:~~

- ~~Identification of critical movements and corresponding intersection approaches.~~
- ~~Determine if the intersection needs new types of traffic control such as roundabout, signalization or multi-way stop control. The Transportation Study indicates that an intersection internal, adjacent or within 500 feet of the development will satisfy the MUTCD Peak Hour Warrant or Four-Hour Warrant within 20 years.~~
- ~~Evaluation of each critical movement under potential scenarios of adding lanes, altering signal phasing, signal timing or lane use.~~
- ~~Evaluation of signal locations, phasing and timing, with particular emphasis on corridor signal progression.~~
- ~~Evaluation of queue lengths for both turn and through lanes to ensure adequate storage space.~~
- ~~Identification of potential improvements within the contexts of Right-of-Way availability, intersection spacing, signal progression, County design standards and practical feasibility.~~

~~Findings & Recommendations~~

~~Throughout the TS, data should be presented in tables, graphs, maps and diagrams in lieu of a narrative, for clarity and ease of review. The examples contained in ITE's current version of Publication No. RP-020C *Transportation Impact Analysis of Site Development* is an excellent source of information.~~

LAND DEVELOPMENT REGULATION SECTION 15 – REDMARKED COPY

Section 15 - Circulation

(orig. 7-12-05)

A. Planning Standards

1. Street/Road Standards: Plans for streets/roads shall be prepared in accordance with the Jefferson County Transportation Design and Construction Manual and shall be approved by Planning and Zoning prior to plat recordation. (am. 7-12-05; am. 5-20-08; am.11-24-15)

   a. Rights-of-Way for public streets/roads, easements for private streets/roads, and emergency access easements shall be granted, conveyed and transferred in accordance with the following: (reloc. 7-12-05; am. 7-17-18)

      (1) Public Street/Road System:

         (a) The fee simple property owner shall be required to dedicate rights-of-way for the following: (am. 7-12-05; am. 7-17-18)

            (a-1) Streets/roads shown on the current Major Thoroughfare Plan within or adjoining the subdivision. (reloc. 7-12-05)

            (a-2) Proposed public streets/roads within the subdivision. (reloc. 7-12-05)

            (a-3) Proposed public streets/roads that connect the subdivision to existing County, state or city maintained streets/roads. (reloc. 7-12-05)

            (a-4) Existing public streets/roads, not previously dedicated, that are within or adjoining the subdivision. The dedication requirement for adjoining streets shall be for the adjoining one-half of the street, and for any portion of the opposite one-half of the street which is under the ownership of the developer. (reloc. 7-12-05; am. 7-17-18)

            (a-5) Turn lanes, speed change lanes and tapers along adjoining property or properties required for construction and safe operation of intersections and new street/road facilities for the proposed subdivision. (reloc. 7-12-05)

         (b) Rights of way for public streets/roads within the boundaries of the subdivision shall be dedicated to Jefferson County in accordance with the Dedication Certificate provisions in the Final Plat Section of this regulation. (orig. 7-17-18)

         (c) Rights of way for public streets/roads exterior to the subdivision boundaries shall be conveyed to the County of Jefferson, in fee simple by general warranty deed, or another type of deed in a form acceptable to the Office of the County Attorney. Unless otherwise approved by the Office of the County Attorney, rights of way shall be free of all encumbrances, including, without limitation, liens, easements, and deeds of trust. (orig. 7-17-18)

      (2) Private Street/Road Systems:

         (a) The provision of access by private streets/roads shall only be permitted if the following applies: (reloc. 7-12-05)

            (a-1) The developer has taken all actions necessary to ensure perpetual access for the benefit of each lot, tract or parcel, and to ensure that the private street/road system within the subdivision is maintained. (reloc. 7-12-05; am. 5-20-08)

            (a-2) The developer has acquired sufficient rights, title, and interest in adjoining property to construct an exterior street/road system to connect the subdivision to public streets/roads to ensure perpetual access to each lot, tract or parcel, and establish permanent maintenance of the private streets/roads. (reloc. 7-12-05)

            (a-3) Access to adjoining properties is not necessary unless required pursuant to A.1.c.(5). (am. 7-12-05; am. 7-17-18)

         (b) Each private street/road within the subdivision boundary shall be designated as a "Utility, Drainage and Emergency Access Easement" on the plat. This Utility, Drainage and

Emergency Access Easement will be dedicated to Jefferson County in accordance with the Dedication Certificate provisions in the Final Plat Section of this regulation. (orig. 7-17-18)

(3) Exterior Emergency Access Easements:

(a) Emergency Access Easements shall be conveyed to Jefferson County for required exterior emergency access connections where the developer does not have the necessary rights to ensure perpetual access for the benefit of each lot, tract or parcel within the development boundary. (am. 7-17-18)

(b) Emergency Access Easements shall be conveyed to Jefferson County by easement deed in a form acceptable to the Office of the County Attorney. The following shall apply to the dedication of the Emergency Access Easements: (am. 7-17-18)

(b-1) The easement shall be for emergency and service vehicle access, and drainage and utility purposes. (orig. 7-17-18)

(b-2) The easement shall not obligate the County to provide maintenance services. (am. 7-17-18)

(b-3) The easement deed shall expressly state that it conveys to the County an easement for each of the following purposes: (i) passage of service vehicles and passage of all vehicles and pedestrians during an emergency; (ii) drainage; and (iii) utilities. (am. 7-12-05; am. 7-17-18)

(b-4) The easement shall be from the fee simple property owner or the owner of a prior easement that expressly provides that it can be assigned or conveyed to the County. (orig. 7-17-18)

(4) Public street/road right-of-way widths and private street/road easement widths shall be provided in accordance with the templates in the Transportation Design and Construction Manual. Additional rights-of-way/easements may be required at locations such as, but not limited to, round-abouts, interchanges, acceleration, deceleration, turn or climbing lanes, cut and fill slopes, sidewalks, trails, medians, traffic signs, and drainage structures, and for maintenance. (reloc. 7-12-05; am. 11-24-15; am. 7-17-18)

b. Street/Road Design

(1) Streets/roads, whether public or private, shall be designed in accordance with the current American Association of State Highway and Transportation Officials (AASHTO) Standards unless modified by the Jefferson County Transportation Design and Construction Manual. (reloc. 7-12-05; am 11-24-15)

(2) Paving of streets/roads within the proposed development and streets/roads connecting the proposed development with other County, state or city paved streets/roads shall be in accordance with the following: (reloc. 7-12-05; am. 12-5-06)

(a) New street/roads to be maintained by the County, state or city shall be constructed to the appropriate public street/road template standard, which includes paving. (orig. 12-5-06)

(b) Existing unpaved County maintained streets/roads shall be constructed to the appropriate public template standard (which includes paving) for a length that is equal to the development impact on the street/road system. For residential development, the development impact shall not exceed a maximum of 4% per lot. If the development impact to a street/road exceeds 80%, then paving for the entire length will be required. The impact on a street/road system will be determined using the following formulas. (reloc. 7-12-05; am. 12-5-06)

Development Impact (%) = Proposed ADT / (Existing ADT + Proposed ADT)

Paving Requirement = Length of Unpaved Section X Development Impact (%)

- Length of Unpaved Section is the distance from the development access point(s) to the paved street/road. (orig. 12-5-06)
- Proposed ADT is the number of trips generated by the proposed development. (orig. 12-5-06)

- Existing ADT is the number of actual trips on the street/road. Existing ADT shall be determined using a traffic counting device located on the gravel portion of the street/road immediately adjacent to the paved section. (orig. 12-5-06)

(c) Should the County choose to accept a cash-in-lieu of construction payment for the paving requirement, the required paving contribution shall be calculated using following:

- Appropriate public street/road template width
- Minimum 5" full depth asphalt surface
- Current County cost for asphalt in place at the development location

The County shall use the cash-in-lieu of construction monies for any improvement on the street/road as deemed necessary or desirable by the County. (orig. 12-5-06)

(d) All private roads and all non-maintained roads in County right-of-way shall be paved if the sum of the existing and proposed ADT on the roads exceeds 150. The paving requirement will apply to that portion of the roads that exceeds 150 ADT (reloc. 7-12-05; am. 12-5-06)

(e) All private streets shall be paved. (orig. 7-17-18)

c. Patterns: Street/road patterns shall be planned consistent with the dedication and design requirements and the following: (reloc. 7-12-05)

(1) Street/road patterns shall induce traffic flow appropriate to the function of the streets/roads. Long, straight and other local street alignments conducive to speeds in excess of 30 M.P.H. shall be avoided. In areas where that is not possible traffic calming measures such as bump outs, neckdowns shall be incorporated at approved intervals to effectively slow down design speeds. (reloc. 7-12-05; am. 7-17-18)

(2) Cul-de-sacs may be used when meeting the following criteria:

(a) Does not exceed 1 mile in length and serves no more than 30 existing plus proposed single family residential units (including platted lots) or obtain approval from ~~the fire protection district~~Planning and Zoning for alternate standards that provide acceptable fire protection and safety mitigation measures concerning access and water. (orig. 11-24-15; am. 7-17-18; am. XX-XX-XX)

(b) Serves no more than 100 multi-family units or obtain approval from Planning and Zoning~~the fire protection district~~ for alternate standards that provide acceptable fire protection and safety mitigation measures concerning access and water. (orig. 11-24-15; am. 7-17-18; am XX-XX-XX)

(c) Cul-De-Sac length is measured from the maximum street/road length of the developable lot within the proposed subdivision to the beginning of the cul-de-sac. (orig. 7-17-18)

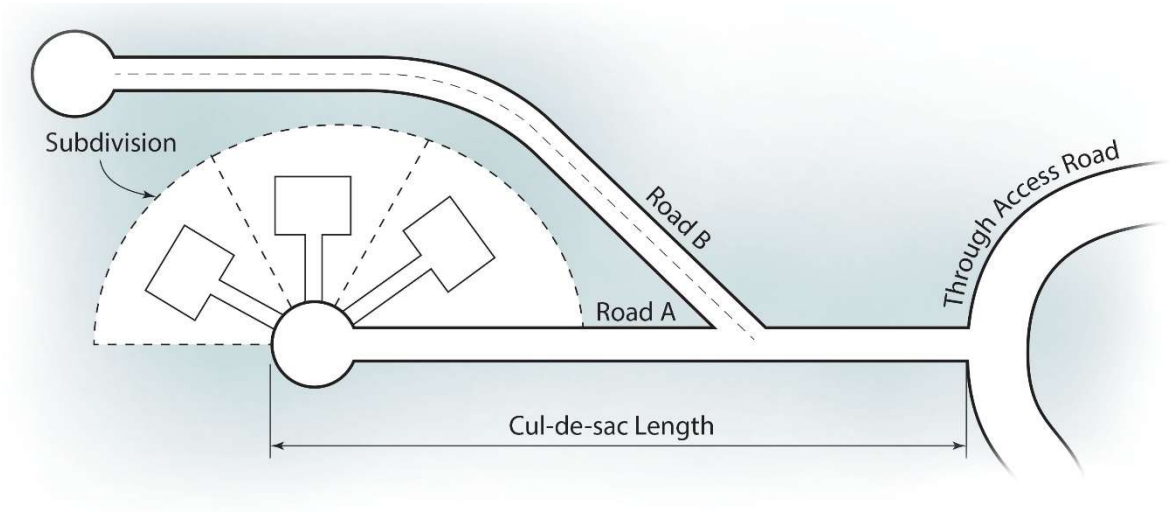

(3) Streets/roads shall be planned and designed to minimize grading and scarring of the terrain, and not create erosion and drainage problems. (reloc. 7-12-05)

(4) Streets/roads shall be continuous and conform in alignment and grade with existing, planned or platted streets/roads with which they are to connect. (reloc. 7-12-05)

(5) Streets/roads shall extend to the subdivision boundary lines as deemed necessary by Planning and Zoning for the connection with adjacent lands. Public streets/roads so extended shall be dedicated as collector streets/roads unless a template for a local street/road is approved by Planning and Zoning. Private streets/roads may be extended to the subdivision boundary provided said private streets/roads are equivalent to public streets/roads for the connection with adjacent lands, if approved by Planning and Zoning (reloc. 7-12-05; am. 5-20-08; am. 7-17-18)

(6) Streets/roads that extend to the boundary line shall be provided with a turn-around. Temporary portions of the turn-around shall be labeled as tracts to facilitate the ultimate reversion of the same. If lots are not dependent upon the extended streets/roads for access, the right-of-way, not including a turn-around, shall be dedicated, but construction of the extended street/road will not be required. (reloc. 7-12-05)

(7) Streets/roads shall intersect one another at right angles or as nearly at right angles as topography and other limiting factors permit. (reloc. 7-12-05)

(8) Intersection spacing shall conform to the Jefferson County Transportation Design and Construction Manual. (am. 7-12-05; am. 5-20-08; am. 11-24-15; am. 7-17-18)

(9) Traffic calming physical devices, such as speed bumps and raised crosswalks shall require approval from the fire protection district and conform to current County policies and procedures. All other traffic calming devices are considered non-physical devices, such as bumpouts, pedestrian refuges and the like, are allowed subject to approval by Planning and Zoning. (orig. 11-24-15)

(10) Subdivisions shall have a street/road system that provides primary and secondary access to existing County, state or city maintained streets/roads, except that secondary access is not required for developments with access provided it meets the cul-de-sac requirements as set forth in this Section. The minimum distance between the centerlines of the primary and secondary access streets/roads shall be in accordance with the spacing provision. The provision of emergency access in-lieu of secondary access shall only be permitted if the following applies: (am. 7-12-05; am. 11-24-15)

(a) Secondary full-time access is not needed for transportation operations and maintenance and level of service to provide appropriate vehicular access and circulation control. (am. 7-12-05; am. 7-17-18)

(b) The developer has taken or agrees to take all actions necessary to ensure that an emergency access has been dedicated to the County and that an emergency access system is maintained. (reloc. 7-12-05)

(c) The developer has taken or agrees to take all actions necessary to ensure that the emergency access will be closed always, except during emergency situations, to vehicle traffic. (reloc. 7-12-05)

(d) The applicable fire protection district has approved the plans for the emergency access facilities and appurtenances thereto. (reloc. 7-12-05)

(e) Access to adjoining properties is not required pursuant to A.1.c.(5) of this Section. (am. 7-12-05; am. 7-17-18)

(f) The emergency access street/road is designated as an "Emergency Access Easement" on the plat and the developer has complied with A.1.a.(2)(b) and A.1.a.(3) of this Section for any portion of the emergency access system exterior to the subdivision. (am. 7-12-05)

d. Names: Streets/roads shall be named in accordance with the following: (reloc. 7-12-05)

(1) Plains: Names of all streets shall be in full conformance with the metropolitan grid system as shown on the Official Jefferson County Base Maps. (reloc. 7-12-05)

(2) Mountains: Names of all roads shall be sufficiently different from previously adopted road names. (reloc. 7-12-05)

e. Street/Road Improvements: Street/road improvements shall be provided for the following: (reloc. 7-12-05)

(1) Streets/roads interior to the development. (reloc. 7-12-05)

(2) The adjoining one-half of contiguous arterial, collector and local streets/roads including streets/roads adjoining park and school lands created by the plat. (reloc. 7-12-05; am. 7-17-18; am. XX-XX-XX)

(3) If existing pavement on the opposite one-half of the street/road does not match with and tie to the required pavement section on the adjoining one-half, then a pavement overlay on part of the opposite one-half shall be required. If the existing pavement cross section is higher than the approved pavement cross section, then the existing pavement on the opposite one-half shall be adjusted or reconstructed to the approved height. (reloc. 7-12-05; am. 7-17-18)

(4) If the opposite side one-half of the street/road is not paved to current Jefferson County standards or does not exist, the developer shall be responsible for a 24-foot total pavement width plus the opposite side shoulder. If existing pavement on the opposite one-half of the street/road does not match with and tie to the required pavement section on the adjoining one-half, then a pavement overlay on part of the opposite one-half shall be required. If the existing pavement cross section is higher than the approved pavement cross section, then the existing pavement on the opposite one-half shall be adjusted or reconstructed to the approved height. (reloc. 7-12-05; reloc. 7-17-18)

(5) Street(s)/road(s) connecting the subdivision with existing Jefferson County, state or city maintained street(s)/road(s). The pavement width of the connecting street/road shall be the same as the street(s)/road(s) within the subdivision with which they connect. Shoulders shall be provided if curb/gutter and sidewalks are not required. (reloc. 7-12-05)

(6) ADA ramps shall be provided including the appropriate receiving ramp even if the entire construction is not adjoining the property. (orig. 7-17-18)

f. Applicants shall not be required to comply with A.1.e.(2), A.1.e.(3) and A.1.e.4 regarding adjoining street/road improvements when: (am. 7-12-05; am. 7-17-18)

(1) The proposed ADT is less than 50 where access is proposed to an existing paved street/road. (reloc. 7-12-05)

(2) The sum of the existing ADT plus the ADT from the proposed development will not exceed 150 where access is proposed to an existing gravel street/road. (reloc. 7-12-05)

2. Driveway Standards: Access from a street/road to 1 residential lot, tract, parcel or structure, or to 1 nonresidential lot, tract, parcel or structure shall meet or exceed the standards set forth below. Access to 2 or more residential or nonresidential lots, tracts, parcels or structures shall be provided by a street/road that conforms to the requirements of this Regulation. (am. 7-12-05; am. 5-20-08; am. 11-24-15)

a. Driveways within the lots/tracts shall be provided from the property line to the building site without: (reloc. 7-12-05)

(1) Creating erosion or drainage problems. (reloc. 7-12-05)

(2) Crossing sewage disposal leaching fields. (reloc. 7-12-05)

b. Driveway design shall facilitate all emergency vehicle movement. (reloc. 7-12-05)

c. Access shall be provided within residential and nonresidential areas to adjoining residential and nonresidential areas respectively as required by Planning and Zoning when such provisions would reduce or limit access onto a street/road. (am. 7-12-05; am. 4-4-06; am. 5-20-08; am. 12-21-10)

3. Curb and Gutter Standards: Curb and gutters or ditches shall be provided for subdivisions in the plains areas in accordance with the Jefferson County Transportation Design and Construction Manual and the following: (reloc. 7-12-05; am. 11-24-15)

a. 6” vertical curb and gutter (with detached sidewalk) or a 4-inch mountable curb and gutter (with attached or detached sidewalk) shall be provided along all local streets, unless otherwise approved by Planning and Zoning. (am. 7-12-05; am. 4-4-06; am. 12-21-10; am. 7-17-18)

b. A 6-inch vertical curb and gutter shall be provided along all collector and arterial streets and along

all streets adjoining public and semipublic tracts and multifamily and nonresidential lots. (reloc. 7-12-05)

c. Ditches may be provided along streets in lieu of curb and gutters where all of the following criteria are met: (reloc. 7-12-05)

(1) Streets are classified as local or collector (ADT less than 8,000). (reloc. 7-12-05; am. 7-17-18)

(2) Street grades are no less than 2 percent and no greater than 4 percent. (reloc. 7-12-05)

(3) Minimum lot frontage is 100 feet. (reloc. 7-12-05)

d. Planning and Zoning may approve roadside ditches in lieu of curb and gutter if it is determined that the curb and gutter cannot be designed to drain properly or if it will cause drainage problems in the area. (orig. 7-17-18)

4. Sidewalk Standards: Sidewalks shall be provided for developments in the Plains area in accordance with the Jefferson County Transportation Design and Construction Manual and the following: (reloc. 7-12-05; am 11-24-15; am. 7-17-18)

a. A 5-foot wide sidewalk (with combination curb and gutter) or a 5-foot wide detached sidewalk or trail shall be provided along local streets adjoining residential developments, unless otherwise approved by Planning and Zoning. (am. 7-12-05; am. 4-4-06; am. 12-21-10; am 11-24-15; am. 7-17-18)

b. A 5-foot attached or detached sidewalk shall be provided along all local and collector streets adjoining nonresidential and multifamily developments. (am. 7-12-05; am. 4-4-06; am. 12-21-10; am 11-24-15; am. 7-17-18)

c. A 6-foot wide detached sidewalk shall be provided along all minor arterial and major collector streets. (orig. 11-24-15)

d. An 8-foot wide detached sidewalk shall be provided along all principal arterial and parkway streets. (am. 7-12-05; am. 4-4-06; am. 11-24-15; am. 7-17-18)

e. Curb ramps shall be provided at all intersections. Mid-block ramps shall be provided at all "T" intersections. Mid block pedestrian ramps should be considered where there is an adjacent pedestrian path. (reloc. 7-12-05; am. 7-17-18)

f. Sidewalk easements shall be provided and dedicated when the sidewalk is not within a dedicated street right-of-way. (reloc. 7-12-05)

g. Adjacent bus stops shall be upgraded to comply with current RTD bus stop requirements. (orig. 7-17-18)

5. Traffic Signal Contributions:

a. A contribution toward a future traffic signal will be required if the following conditions are met:

(1) The development generates over 1000 average daily trips or 100 trips in a peak hour period; and (orig. 7-17-18)

(2) The Transportation Study indicates that an intersection internal, adjacent or within 500 feet of the development will satisfy the MUTCD Peak Hour Warrant or Four Hour-Warrant within 20 years. (orig. 7-17-18)

If the above conditions are met, then the applicant shall provide a contribution representing the proportional percentage of the site that is within 500 feet to the intersection requiring future traffic signal improvements. For illustrative purposes only, if the site is at the corner of one quadrant of the intersection the contribution shall be 25% of the traffic signal for the intersection. The contribution should be a cash-in-lieu payment, which will be returned to the applicant if conditions change or the traffic signal is no longer warranted within the original 20-year period. (orig. 7-17-18)

B. Construction Specifications

1. Street/Road and Curb/Gutter/Sidewalk Standards: Construction shall be in accordance with the approved Plans and meet the criteria of the Jefferson County Transportation Design and Construction Manual. (am. 7-12-05; am. 12-21-10; am. 11-24-15)

ZONING RESOLUTION SECTION 16 – REDMARKED COPY

Section 16: Land Disturbance

(orig. 8-25-86; am. 9-24-91; am. 8-8-95; am. 10-12-04;
am. 4-20-10; am.11-20-12; am 6-1-19)

A. Purpose

The purpose of this section is to:

1. Protect the water quality of the County's drainageways and surface waters; (orig. 10-12-04; am. 12-6-22)
2. Protect life, property and the environment from loss, injury and damage by stormwater runoff, erosion, sediment transport, ponding, flooding, landslides, accelerated soil creep, settlement and subsidence, excessive dust, and other potential hazards caused by grading, construction activities, and denuded soils; (orig. 10-12-04)
3. Allow a temporary land use for land disturbance activities; and (orig. 8-25-86; am. 9-24-91; am. 3-23-99; am. 10-12-04)
4. Establish performance standards to:
   a. Define grading, drainage, erosion and sediment control, and waste disposal requirements; (orig. 10-12-04)
   b. Ensure mitigation of adverse impacts; and (orig. 10-12-04)
   c. Ensure the reclamation of disturbed land. (orig. 10-12-04)

B. General Provisions

1. Performance Standards:

   All Land Disturbance Activities must conform to the performance standards as detailed in this section. These standards apply whether or not a Land Disturbance Permit is required. (orig. 10-12-04; am. 12-6-22)

2. Activities Requiring a Land Disturbance Permit (Grading Permit or Notice of Intent):

   It shall be unlawful for any person, firm or corporation to do or authorize any land disturbance in the unincorporated area of Jefferson County without first obtaining a Land Disturbance Permit from the County to authorize temporary land disturbance activities unless specifically exempted by this section. The applicant, the landowner, and the contractor are responsible if a land disturbance activity is not in accordance with the performance standards, or if a land disturbance activity is undertaken beyond the scope of the Land Disturbance Permit without County approval. Land disturbance activities must be completed in compliance with the approved plans. (orig. 8-25-86; am. 9-24-91: 8-8-95; am. 3-23-99; am. 12-17-02; am. 10-12-04; am. 12-6-22)

   a. Land Disturbance Activities will require a Grading Permit if one the following apply: (orig. 10-12-04; am. 12-6-22)
      (1) The disturbed area is equal to or greater than 0.5 acres. (orig. 6-1-19; am. 12-6-22)
      (2) Land disturbance activities with or in advance of a building permit with less than 0.5 acres of land disturbance, where the applicant is requesting relief of a regulatory requirement, including all performance standards related to grading, drainage and circulation. (orig. 6-1-19; am. 12-6-22; reloc. XX-XX-XX)
      (~~2~~3) 5,000 or more cubic yards of earthen material is stored on a property and the material is not actively being used on said property. An active use would be construction associated with an active building permit for a primary structure. (orig. 12-6-22)
   b. Land disturbance activities that require a Notice of Intent to be submitted with, or in advance of, a Building Permit application include the following: (orig. 10-12-04; am. 6-1-19; am. 12-6-22)
      ~~(1) Land disturbance in accordance with lot grading, erosion and sediment control plans approved with plats; (orig. 10-12-04; am. 11-24-15; am. 6-1-19) or~~
      (~~2~~1) Land disturbance associated with new start building permits for primary structures. (orig. 6-1-19)

(2) Land disturbance associated with access to detached living space where either the access does not exist or has not previously been approved as access to living space. (orig. XX-XX-XX)

~~(3)~~ This Notice of Intent process shall only apply to land disturbance activities that meet the regulatory requirements, including all performance standards related to grading, drainage and circulation~~; otherwise, a Grading Permit is required~~. (orig. 6-1-19; am. 12-6-22; am. XX-XX-XX)

3. Activities exempt from the Requirement for a Grading Permit

Land disturbance activities that are exempt from Grading Permit requirements shall comply with the specific requirements, if any, listed in the applicable exemption provision below. In addition, land disturbance associated with activities listed within this exemption section must still be in compliance with the performance standards set forth in this section, unless specifically stated otherwise. The applicant, landowner and the contractor are responsible if land disturbance activity is not in accordance with these performance standards. The following land disturbance activities are permissible without obtaining a Grading Permit: (orig. 8-25-86; am. 9-24-91; am. 8-8-95; am. 3-23-99; am. 10-12-04; am. 4-20-10; am. 6-1-19; am. 12-6-22)

a. Projects which involve less than 0.5 acres of disturbed area. Individual lots in subdivision developments under the same ownership, involving less than 0.5 acres of disturbed area, shall not be considered separate projects if they are contiguous or within 0.25 mile of each other. Any series of related projects or connected projects on one site, which together exceed the 0.5 acre limitation shall be considered a single project and shall be required to obtain a Grading Permit. (orig. 9-24-91; am. 12-17-02; am. 10-12-04; am. 7-12-05; am. 11-24-15; am. 6-1-19)

b. Land disturbance work being done pursuant to and in conformance with an approved grading plan in conjunction with an approved recorded Plat, Site Development Plan, Minor Adjustment or Exemption from Platting. (orig. 8-25-86; am. 9-24-91; am. 8-8-95; am. 4-27-04; am. 10-12-04)

c. Tillage of agricultural land is exempt from all permit requirements. Agricultural uses of land zoned agricultural, other than tillage, which disturb greater than 0.5 acres is exempt from the filing requirements, provided a conservation plan for the proposed grading activities using the United States Department of Agriculture Soil Conservation Service standards is approved by the Jefferson Conservation District. A copy of the conservation plan shall be submitted to Planning and Zoning prior to the commencement of grading activities. The County may enforce the conditions of the conservation plan under the enforcement provisions of this section. (orig. 9-24-91; am. 8-8-95; am. 12-17-02; am. 4-27-04; am. 11-24-15; am. 6-1-19; am. 12-6-22)

d. Trenching incidental to the construction, maintenance and installation of approved underground pipelines, electrical or communication facilities, and drilling or excavation for approved wells if the total area of land disturbance is less than one acre. Construction activities associated with the installation of the onsite wastewater treatment system (OWTS) shall not be exempt. Construction of access required to complete the trenching or for future maintenance shall not be exempt. (orig. 8-25-86; am. 9-24-91; am. 8-8-95; am. 10-12-04; am. 4-20-10; am.11-20-12; am. 11-24-15; am. 12-6-22)

e. Land disturbance for utility installation or maintenance within a County owned or County maintained Right-of-Way if the total area of land disturbance is less than one acre. These activities require a County Right-of-Way and Construction Permit. (orig. 8-8-95; am. 10-12-04; am.11-20-12)

f. Land disturbance or excavations in accordance with plans incorporated in a mining permit, reclamation plan or sanitary landfill approved by the County. (orig. 8-25-86; am. 9-24-91; am. 12-17-02; am. 10-12-04)

g. County capital improvement or County maintenance projects within Right-of-Way or County property if the total area of land disturbance is less than one acre. (orig. 12-17-02; am. 10-12-04; am.11-20-12; am. 12-6-22)

h. Maintenance and cleaning of existing ditches, lakes, ponds, storm sewer system, and water storage reservoirs with a total area of land disturbance is less than one acre. (orig. 8-25-86; am. 10-12-04; am. 6-1-19)

i. Land disturbance for culvert installation or maintenance within a County owned, public ROW or County maintained Right-of-Way if the total area of land disturbance is less than one acre and the culvert is intended to convey stormwater only. (orig. 6-1-19)

j. Maintenance and resurfacing of existing streets/roads, runways, sidewalks/trail systems, parking lots/loading areas, and railroad beds. (orig. 9-24-91; am. 10-12-04)

k. Performance of emergency work necessary to prevent or mitigate an immediate threat to life or property when an urgent necessity arises. The person performing such emergency work shall notify Planning and Zoning promptly of the problem and work required. If the emergency work would not otherwise be exempt from a Grading Permit, a Grading Permit shall be obtained as soon as possible. (orig. 8-25-86; am. 9-24-91, 8-8-95; am. 4-27-04; am. 10-12-04; am. 5-20-08)

l. Enlargements to parking areas less than 0.5 acre larger than the original area of existing parking facilities for commercial, industrial and institutional uses. Stormwater detention and water quality must be provided for in accordance with the Storm Drainage Design and Technical Criteria Manual. (orig. 4-27-04; am. 10-12-04; am. 11-24-15; am. 6-1-19)

m. Land disturbance for natural surface trails that are less than one acre are exempt. Land disturbance over one acre associated with the construction of natural surface trails shall follow the procedure outlined below prior to commencement of any trail construction. The land disturbance associated with the construction of natural surface trails shall conform with the performance standards of this section and the current Jefferson County Natural Surface Trail Guide. (orig. 4-20-10; am.11-20-12; am. 11-24-15; am. 7-17-18)

(1) Plans are submitted showing the location and overall scope of the trail construction project, including a description of the proposed construction phasing. (orig. 4-20-10; am. 7-17-18)

(2) A detailed construction schedule is provided for each phase of the construction project. (orig. 4-20-10)

(3) The applicant proposes a construction guide that includes typical construction procedures that will be used during the construction of trails, including erosion and sediment control measures. (orig. 4-20-10)

(4) Planning and Zoning has reviewed the construction guide and has determined that the construction procedures will be sufficient to assure compliance with the grading performance standards of this section, and state or county erosion and sediment control standards. (orig. 4-20-10)

(5) The applicant shall stake the proposed trail alignment and shall coordinate a site visit with County Staff to review the alignment. If Staff identifies areas where trail alignment should be adjusted to assure conformance with the performance standards and the construction guide, then a new plan showing the new alignment shall be submitted. (orig. 4-20-10)

(6) The applicant agrees to implement the construction procedures identified within the guide and agrees that the county has the authority to inspect and require field alterations if the typical construction procedures identified in the guide are not being properly implemented. The applicant also agrees that failure to implement the construction standards of the guide or the field alterations directed by Planning and Zoning may result in the issuance of a zoning violation in accordance with this Resolution; and may result in the exemption from the grading permit requirements being revoked for future phases of the trail construction project. (orig. 4-20-10)

(7) The applicant submits the standard Grading Permit fee to cover the cost of the review and approval of the construction guide, and the inspection of each phase of the construction process. (orig. 4-20-10)

The procedures outlined in this section shall not apply to trail construction in special flood hazard areas that have been identified as a part of the Jefferson County Floodplain Overlay District. The appropriate floodplain development permit and grading permit will be required for construction activities occurring within special flood hazard areas. (orig. 4-20-10; am. 6-1-19)

n. Any work within State or Federal lands including Rights-of-Way and/or permanent easements held by said agencies. This exemption does not relieve these entities from completing a floodplain development permit in accordance with the Floodplain Overlay District Section of this regulation. (orig. 7-17-18)

o. Onsite disturbance through the Land Disturbance Permit may not be required for properties that are covered by a separate Municipal Separate Storm Sewer System (MS-4) permit through the State of

Colorado, as determined by Planning & Zoning. (reloc. and am. 5-21-19)

4. Exemptions, Waivers, Variances and/or Exclusions

   Any exclusions, exemptions, waivers, and variances included in the regulatory mechanism must comply with the terms and conditions of the MS4 Permit (COR090000). (orig. 6-1-19)

5. Denial of other Permits

   Building Permits or Certificate of Occupancy shall not be issued while an unresolved grading, drainage or floodplain violation is ongoing on the subject property or within a common plan of development. (orig. 8-25-86; am. 9-24-91, am. 8-8-95; am. 12-17-02; am. 7-17-18; am. 6-1-19; am. 12-6-22)

6. Permission of other Agencies or Owners

   The issuance of a Grading Permit or the submission of a Notice of Intent shall not relieve the applicant of the responsibility for securing other permits or approvals required by any other division or agency of Jefferson County or other public agency or for obtaining any easements or authorization to work within an existing easement or for removing or transporting earth materials on property not owned by the applicant. (orig. 8-25-86; am. 9-24-91; am. 8-8-95; am. 12-17-02; am. 4-27-04; am. 10-12-04; am. 12-6-22)

7. Construction and Permits

   For construction within County Right-of-Way, the Grading Permit or Notice of Intent must be accompanied by an Access Permit and/or a Right-of-Way Use and Construction Permit in accordance with plans approved by the County. For construction outside of County Right-of-Way, the Grading Permit must be accompanied by a Construction Permit in accordance with the plans approved by the County. The applicant shall obtain applicable permits from the County prior to commencing field work. All other applicable requirements shall be followed including the Transportation Design and Construction Manual. (orig. 8-8-95; am. 12-17-02; am. 10-12-04; am. 11-24-15; am. 7-17-18; am. 12-6-22)

8. Liability

   Neither the issuance of a Grading Permit nor the submission of a Notice of Intent under the provisions of this section nor compliance with the provisions hereof or with any conditions imposed in this section shall relieve the applicant from responsibility for damage to any person or property or impose any liability upon the County for damage to any person or property. (orig. 8-25-86; am. 12-17-02; am. 10-12-04)

9. Restricted Activities

   a. No blasting, processing, crushing, or off-site hauling or other similar treatment of a commercial mineral deposit may occur in the permit area. (orig. 9-24-91; am. 10-12-04)

   b. Any activity to construct any street/road to be dedicated to the County shall be undertaken pursuant to the Land Development Regulation and the Transportation Design and Construction Manual and in accordance with plans approved by the County. (orig. 9-24-91; am. 8-8-95; am. 3-23-99; am. 12-17-02; am. 10-12-04; am. 11-24-15)

   c. No Grading Permit shall be issued for any land disturbance activity which exceeds the minimal amount of grading necessary for the uses legally allowed at the time of permit application. Land disturbance activities for uses that require rezoning are unlawful. (orig. 8-8-95; am. 3-23-99; am. 10-12-04)

   d. When there is a grading plan approved in conjunction with a Plat, Site Development Plan, Minor Adjustment or an Exemption from Platting, it shall be unlawful to grade in a manner that is not consistent with the approved grading plan. (orig. 8-8-95; am. 3-23-99; am. 10-12-04; am. 7-17-18)

   e. Any construction or development activity in a drainage easement or tract must either be in compliance with the original approved drainage report or comply with the Storm Drainage Design and Technical Criteria. (orig. 10-12-04)

10. Grading Concurrent with Platting

    a. When a property is in a platting process, grading activities may commence prior to Plat approval by the Board of County Commissioners provided all of the following conditions are satisfied: (orig. 3-23-99; am. 10-12-04)

       (1) The zoning is final and recorded. (orig. 3-23-99)

(2) The subdivision proposal has received approval by the Planning Commission or a recommendation of approval by the Planning Commission. (orig. 3-23-99; am. 10-12-04, am. 12-6-22)

(3) The grading and sediment and erosion control plans have received staff approval, either through the Final or Preliminary and Final Plat process. The grading plans shall not include permanent facilities such as curb, gutter, sidewalk, asphalt, etc. The installation of drainage facilities is allowed as approved by Planning and Zoning. (orig. 3-23-99; am. 10-12-04; am. 11-24-15)

(4) The Final Plat application has been received and accepted as complete by staff or the Planning Commission has recommended approval of the Preliminary and Final Plat. (orig. 3-23-99; am. 10-12-04; am. 11-24-15)

(5) Grading within a Floodplain Overlay District may be permitted if a Floodplain Development Permit has been issued. (orig. 3-23-99; am. 12-17-02; am. 10-12-04; am. 11-24-15; am. 7-17-18)

(6) No waivers or alternative standards/requirements or variances related to grading requirements are being requested or are necessary in conjunction with the Final or Preliminary and Final Plat application. (orig. 3-23-99; am. 10-12-04; am. 11-24-15)

(7) The applicant has submitted a letter to the County indicating a request to commence land disturbance activities prior to Final or Preliminary and Final Plat approval and acknowledging that grading prior to Platting is done at their own risk, that grading changes may be required upon Final or Preliminary and Final Plat approval, and that the County shall not be held responsible for changes emanating from or costs associated with any changes that may be required as a result of Final or Preliminary and Final Plat approval. (orig. 3-23-99; am. 12-17-02; am. 10-12-04; am. 11-24-15)

(8) A Performance Guarantee has been accepted by the County in accordance with the Land Development Regulation. (orig. 10-12-04)

b. When grading activities are authorized prior to Plat approval by the Board of County Commissioners, the grading shall comply with the Land Development Regulation and with any previously approved grading plans. (orig. 3-23-99; am. 12-17-02; am. 10-12-04; am. 11-24-15)

c. Any land disturbance activity permitted pursuant to this section may be subject to additional requirements or alterations depending on approval conditions imposed by the Board of County Commissioners during the Plat review. (orig. 3-23-99; am. 10-12-04)

11. Grading Concurrent with the Processing of a Site Development Plan or Minor Adjustment

a. When a property is in a Site Development Plan or Minor Adjustment process, grading activities may commence prior to approval by Planning and Zoning provided all of the following conditions are satisfied: (orig. 11-24-15; am. 7-17-18)

(1) The zoning is final and recorded. (orig. 11-24-15)

(2) The grading and sediment and erosion control plans have received staff approval. The grading plans shall not include permanent facilities such as curb, gutter, sidewalk, asphalt, etc. The installation of drainage facilities is allowed as approved by Planning and Zoning. (orig. 11-24-15)

(3) Grading within a floodplain overlay district may be permitted if a Floodplain Permit has been issued. (orig. 11-24-15; am. 7-17-18)

(4) No alternate standards/requirements or variances related to grading requirements are being requested or are necessary in conjunction with the Minor Adjustment or Site Development Plan application. (orig. 11-24-15)

(5) The applicant has submitted a letter to the County indicating a request to commence land disturbance activities prior to Minor Adjustment or Site Development Plan approval and acknowledging that grading prior to approval is done at their own risk, that grading changes may be required upon Minor Adjustment or Site Development Plan approval, and that the County shall not be held responsible for changes emanating from or costs associated with any changes that may be required as a result of Minor Adjustment or Site Development Plan approval. (orig. 11-24-15)

(6) A Performance Guarantee has been accepted by the County in accordance with the Land Development Regulation. (orig. 11-24-15)

b. When grading activities are authorized prior to Minor Adjustment or Site Development Plan approval by Planning and Zoning, the grading shall comply with the Land Development Regulation and with any previously approved grading plans. (orig. 11-24-15; am. 7-17-18)

c. Any land disturbance activity permitted pursuant to this section may be subject to additional requirements or alterations depending on approval conditions imposed by Planning and Zoning during the Minor Adjustment or Site Development Plan review. (orig. 11-24-15; am. 7-17-18)

C. Submittal Requirements

The following submittal documents are required for Land Disturbance Permit Applications. (orig. 8-25-86; am. 7-17-18; am. 6-1-19)

1. An application form signed by the fee simple owner of the property or by the lessee, licensee or easement holder if the activity is to be undertaken pursuant to that interest. Grading Permit, Notice of Intent, and Natural Surface Trail application forms are available from Planning and Zoning. (orig. 10-12-04; am. 5-20-08; am. 6-1-19)

2. A cover letter describing the proposed activities. Not Required for Notice of Intent Applications. (orig. 10-12-04; am. 5-20-08; am. 6-1-19)

3. A nonrefundable application fee in an amount established by the Board of County Commissioners. (orig. 8-25-86; am. 9-24-91; am. 5-3-94)

4. A copy of the recorded deed for the parcel, tract or lot. (orig. 12-6-22)

5. Proof of Access in accordance with the Access Standards in the General Provisions and Regulations Section of this Zoning Resolution. (orig. 6-1-19)

6. A grading, erosion and sediment control plan in accordance with the Plans and Specifications of this Section. (orig. 8-25-86; am. 6-1-19)

7. A geologic and/or soils investigation report in accordance with the Plans and Specifications of this Section is required if there are any geological hazards including highly erodible soils or commercial mineral deposits within or immediately adjacent to the grading site or when the final cut or fill slopes are proposed to be steeper than 2H:1V or if infiltration is a component of the drainage system. (orig. 8-25-86; am. 9-24-91, 8-8-95; am. 12-17-02; am. 10-12-04; am. 6-1-19; am. 12-6-22)

8. A drainage report or drainage letter in conformance with the requirements of the Storm Drainage Design and Technical Criteria. (orig. 10-12-04; am. 11-24-15; am. 6-1-19; am. 12-17-19)

9. Construction plans, details and supporting calculations for retaining walls, if applicable, in accordance with the Performance Standards of this Section. For Notice of Intent Applications, the applicant will need to apply for a separate miscellaneous permit for retaining walls greater than 36 inches high. (orig. 10-12-04; am. 6-1-19)

10. Drainage Easements may be required to be dedicated to the County for all permanent control measures. The applicant shall provide a legal description and exhibit (signed and stamped by a Professional Land Surveyor) when applicable. Not Required for Notice of Intent Applications. (orig. 12-17-19)

11. A cost and/or quantity estimate (Exhibit A) in accordance with the Improvement Security requirements of this Section, for all the work associated with the project. Reference the example Exhibit A on the Planning and Zoning website. Not Required for Notice of Intent Applications. (orig. 10-12-04; am. 7-12-05; am. 7-17-18; am. 6-1-19; am.12-17-19; am. 12-6-22)

    Note: An improvements security may be required in accordance with the Security requirements of this Section. The typical improvement security will be a letter of credit or cash escrow. If required the improvement security will need to be submitted prior to approval of the Land Disturbance application. (orig. 10-12-04; am. 7-17-18; am. 6-1-19; 12-17-19)

12. A completed N-1 Form stating that the proposed construction and grading are in conformance with the Land Disturbance requirements of this Section and, if applicable, the approved overall grading plan for the subdivision. Only Required for Notice of Intent Applications. (orig. 6-1-19)

    Note: A completed N-2 Form is required prior to issuance of a Certificate of Occupancy. (orig. 6-1-19)

D. Procedures

1. Notice of Intent Procedures: A Notice of Intent (NOI) shall be submitted with, or in advance of, a building permit application for a primary structure that depicts the phased grading, erosion and sediment control measures for that lot/parcel. The NOI shall certify that the Plans are in conformance with the Jefferson County Zoning Resolution (ZR), the Land Development Regulation (LDR), the Storm Drainage Design and Technical Criteria (SDDTC), and The Transportation Design and Construction Manual (TDCM). Any requests for relief of these standards shall require the submittal of a Grading Permit. If applicable, the NOI shall state that the project will be in conformance with the approved construction documents with that subdivision. A completed Form Letter N-1 stating that the proposed construction and grading are in conformance with the approved overall grading plan and Land Disturbance Performance Standards shall be submitted to Planning & Zoning prior to issuance of the Building Permit. Form Letter N-1 shall be completed by a Colorado registered professional engineer. (orig. 6-1-19; am. 12-6-22)

Process Steps	Processing Time Frames	
Process from Plan Submittal to Acceptance of NOI		
Plan Submittal Intake	7 calendar days (Staff confirms the land disturbance permit qualifies as an NOI and required submittal items have been received)	Example timeframe: 19 Days to acceptance of NOI if processing time frames are met. May take longer if issues arise.
Applicant Action is Required	Varies, 5 calendar days used for example timeframe	
Plan Resubmittal and NOI Acceptance	7 calendar days (Staff confirms required submittal items have been received)	
Final Close Out		
Permit Monitoring until submittal of N-2	2 years maximum	

<u>Plan Submittal Intake</u>

a. Sufficiency Review:

The applicant shall electronically submit all the applicable documents identified in the Submittal Requirements of this Section as a complete package, and not in a fragmentary manner for review by the Case Manager. (orig. 12-6-22)

The Case Manager shall have 7 calendar days to review the submittal and either accept the application or respond to the applicant explaining any deficiencies in the submittal documents (including the appropriate application fees). A submittal that is not complete in terms of the type of documents required will not be accepted. (orig. 12-6-22)

Resubmittal Sufficiency Review (if required): The Case Manager shall have 7 calendar days to review the resubmittal and either accept the application or respond to the applicant explaining any deficiencies in the submittal documents. (orig. 12-6-22)

Plan Resubmittal and NOI Acceptance:

b. The final documents shall be comprised of the Submittal Requirements of this Section. (orig. 12-6-22)

The applicant shall have a maximum of 180 calendar days to respond to the comments from the case manager, or the application will be considered withdrawn. The applicant will then have to file a new application with the required fees and documents. The Director of Planning and Zoning may extend this 180-calendar day maximum response deadline for additional 180 calendar day periods if, in his/her opinion, the delay in response is for good cause. (orig. 12-6-22)

c. The Case Manager shall have 7 calendar days to review the resubmitted documents and shall accept the application if it is complete in form and has all the required information described in the Notice of Intent N-1 Form that provides certification from a Colorado registered professional engineer stating that the submitted plans are in conformance with the Jefferson County Zoning Resolution (ZR), the Land Development Regulation (LDR), the Storm Drainage Design and Technical Criteria (SDDTC), the Transportation Design and Construction Manual (TDCM), and the notes, restrictions and supporting documents of any associated approved Preliminary and Final Plat. The owner, contractor or engineer shall also certify that the specified control measures will be installed prior to land

disturbance and that control measures will be adequately maintained throughout the process and shall sign the N-1 Form. (orig. 12-6-22)

Permit Monitoring:

d. Once the work associated with the accepted Notice of Intent is complete, the applicant shall submit a completed N-2 Form which provides certification from a Colorado registered professional engineer stating that all grading work was completed in conformance with the final accepted Grading, Erosion and Sediment Control (GESC) Plan, Drainage Report and N-1 submitted with the project application. If amendments to the accepted plans were made resulting in grading activities that were not completed in conformance with the final accepted plans, then the N-2 Form shall be submitted in conformance with the Amendments procedure of this Section. (orig. 12-6-22)

Permit Limitations:

e. The permit shall be limited to work shown on the approved plans. Such plans shall contain guidelines, conditions, and/or restrictions as are necessary to comply with the performance standards. At any time during the plan review or in the event unforeseen conditions arise during completion of the project, the County may require revision of the plans as necessary to ensure compliance with the performance standards. (orig. 12-6-22)

Amendments:

f. Modifications to the final accepted plans requires submittal of the revised plans and the completed N-2 Form which provides certification from a Colorado registered professional engineer stating that deviations from the accepted plans have occurred and that the revised plans and work has been completed in conformance with the Jefferson County Zoning Resolution (ZR), the Land Development Regulation (LDR), the Storm Drainage Design and Technical Criteria (SDDTC), the Transportation Design and Construction Manual (TDCM), and the notes, restrictions and supporting documents of any associated approved Preliminary and Final Plat. If the appropriate certification cannot be provided and the modifications to the plans do not conform to the Jefferson County Standards and Regulations for land disturbance permits described in this section, revised plans shall be submitted and reviewed by Planning & Zoning through an ~~Grading Permit Application~~Administrative Review process where requests for relief from standards will be evaluated. (orig. 12-6-22)

Validity:

g. The acceptance of plans and specifications by the County shall not be construed as an approval of any violation of the provisions of this section or of any other applicable laws, rules or regulations and shall not prevent the County from thereafter requiring the correction of errors in said plans and specifications or from preventing work being carried on thereunder in violation of this section or any other applicable law, rule or regulation. The issuance of a Land Disturbance Permit prior to any Plat approval shall in no way bind the Planning Commission or the Board of County Commissioners in the approval or denial of a Plat application, and the applicant's grading activities are at the applicant's risk. (orig. 12-6-22)

Time Limits:

h. The work associated with the permit shall be completed within 2 years of the date of acceptance unless an extension has been granted by Planning and Zoning. A request for an extension shall be submitted in writing no later than 10 calendar days prior to the expiration of the permit. Planning and Zoning may grant an extension to the permit up to 1 year. Additional extensions may be granted by Planning and Zoning to allow the establishment of permanent erosion and sediment control measures. (orig. 12-6-22)

2. Grading Permit Procedures: If the applicant complies with all given time frames, submits a complete Grading Permit application and complies with all requirements of this regulation, the estimated time to reach the Determination Phase of the process is 66 calendar days from the date of the 1st referral, depending on the amount of disturbance for the proposed grading activity. (orig. 5-20-08; am. 7-17-18; am. 6-1-19; am. 12-6-22)

Process Steps	Processing Time Frames
Steps prior to 1st Referral	
Sufficiency Review and Referral Distribution or Deficiency Response	7 calendar days
Resubmittal Sufficiency Review (if necessary)	7 calendar days

Process from 1st Referral to Determination		
1st Referral and Staff Response	21 calendar days (14 day referral, 7 days for Staff response)	Example timeframe: 66 Days to determination if processing time frames are met. May take longer if issues arise.
Applicant's Response to 1st Referral	Varies, 14 calendar days used for example timeframe	
Sufficiency Review and Referral Distribution	7 calendar days	
2nd Referral and Staff Response	14 calendar days (7 day referral, 7 days for Staff response)	
Submittal of Final Documents by applicant	Varies - 10 calendar days used for example timeframe	
Determination		
Determination	7 days	

If an applicant is going to request relief from a standard in the Regulations, then a request for relief of the standard may be submitted for consideration. In order to avoid processing delays, it is recommended that a request for relief from a standard be submitted early in the development process. Requests for relief of a standard are subject to different specific processing timeframes, which may add to the length to the processing of the development application. (orig. 5-20-08; am. 7-17-18; am. 6-1-19)

Notification is required at the time of the 1st Referral in accordance with the notification provisions of this section. (orig. 6-1-19)

Proof of Access: The Director of Planning and Zoning may allow the 1st Referral to be sent without meeting the access criteria proof of access requirements, if in his/her opinion the circumstances related to proving access should be finalized during the processing of the application. (orig. 4-20-10; am. 12-21-10; am. 6-1-19)

Steps Prior to 1st Referral

a. Sufficiency Review and Referral Distribution (1st Referral):

The applicant shall electronically submit all the applicable documents identified in the Submittal Requirements of this Section as a complete package, and not in a fragmentary manner for review by the Case Manager.

The Case Manager shall have 7 calendar days to review the submittal and either send the application out on referral or respond to the applicant explaining any deficiencies in the submittal documents (including the appropriate referral fees). A submittal that is not complete in terms of the type of documents required will not be sent out on referral. (orig. 7-17-18; am. 12-6-22)

Resubmittal Sufficiency Review (if required): The Case Manager shall have 7 calendar days to review the resubmittal and either send the application out on referral or respond to the applicant explaining any deficiencies in the submittal documents. (orig. 7-17-18; am. 12-6-22)

Process from 1st Referral to Determination

b. 1st Referral and Staff Response:

The referral agencies shall have 14 calendar days to respond in writing to the application. An extension of no more than 30 calendar days may be agreed to by the applicant. (orig. 5-20-08; am. 7-17-18; am. 6-1-19)

The Case Manager shall have 7 calendar days, after the end of the referral period, to provide the applicant with a Staff response inclusive of other referral responses. The response from the Case Manager will include an opinion as to whether the case should proceed forward to the Final Documents phase or if revised documents should be submitted for a subsequent referral process. (orig. 5-20-08; am. 7-17-18)

c. Applicant's Response to 1st Referral:

For the application to be processed in accordance with the example timeframe in the table above, the applicant shall have 14 Calendar days to address in writing any issues identified by the Case Manager or any referral agency and resubmit revised documents for the 2nd referral. (orig. 5-20-08; am. 7-17-18)

Regardless of the example timeframe, the applicant shall have a maximum of 180 calendar days to respond to the referral comments or the application will be considered withdrawn. The applicant will then have to file a new application with the required fees and documents. The Director of Planning and Zoning may extend this 180 calendar day maximum response deadline for additional 180 calendar day periods if, in his/her opinion, the delay in response is for good cause. (orig. 5-20-08; am. 12-21-10; am. 7-17-18)

d. Sufficiency Review and Referral Distribution (2nd Referral):

The Case Manager shall have 7 calendar days to review the submittal and either send the application out on referral or respond to the applicant explaining any deficiencies in the submittal documents. A submittal that is not complete in terms of the type of documents required will not be sent out on referral. All resubmittal documents shall be submitted as a complete package, and not sent in a fragmentary manner. (orig. 7-17-18; am. 12-6-22)

Resubmittal Sufficiency Review (if required): The Case Manager shall have 5 calendar days to review the resubmittal and either send the application out on referral or respond to the applicant explaining any deficiencies in the submittal documents. (orig. 7-17-18)

e. 2nd Referral and Staff Response:

The referral agencies shall have 7 calendar days to respond in writing to the 2nd referral. An extension of no more than 30 calendar days may be agreed to by the applicant. (orig. 5-20-08; am. 7-17-18)

The Case Manager shall have 7 calendar days after the end of the referral period to provide the applicant with a Staff response inclusive of referral agency responses. The response from the Case Manager will include an opinion as to whether the case should proceed forward to the Final Documents phase or if revised documents should be submitted for a subsequent referral process. (orig. 7-17-18)

f. Applicant's Response to 2nd Referral Comments:

The applicant shall have a maximum of 180 calendar days to respond to the referral comments, or the application will be considered withdrawn. The applicant will then have to file a new application with the required fees and documents. The Director of Planning and Zoning may extend this 180 calendar day maximum response deadline for additional 180 calendar day periods if, in his/her opinion, the delay in response is for good cause. (orig. 5-20-08; am. 12-21-10; am. 7-17-18)

g. Additional Referrals and Responses:

For the 3rd Referral, and for any subsequent referrals thereafter, the processing of the application shall follow the same steps identified above in the Sufficiency Review and Referral Distribution (2nd Referral) process, the 2nd Referral and Staff Response process and the Applicant's Response to 2nd Referral process. (orig. 5-20-08; am. 7-17-18)

h. Final Documents:

The final documents shall be comprised of the stamped and signed grading plans and other final documents as identified by the Case Manager. In addition to submitting the final documents electronically, the applicant shall submit hard copies of the plans as specified in the case managers response to the last referral. (orig. 5-20-08; am. 6-1-19)

The applicant shall have a maximum of 180 calendar days to respond to the comments from the case manager, or the application will be considered withdrawn. The applicant will then have to file a new application with the required fees and documents. The Director of Planning and Zoning may extend this 180-calendar day maximum response deadline for additional 180 calendar day periods if, in his/her opinion, the delay in response is for good cause.

i. Determination:

The Case Manager shall have 7 calendar days to review the Final Documents and shall approve, conditionally approve or deny the application. An application shall be approved if it is complete in form, has all required information, includes appropriate control measure for all stages of construction, including final stabilization, the control measures meet the requirements of the MS4 Permit and the provisions of this section. Otherwise, it shall be denied. Any approval or denial shall be in writing with the reasons for denial specifically identified. Annotations on the plans shall be considered sufficient detail of the reasons for denial. (orig. 8-25-86; am. 9-24-91; am. 8-8-95; am. 12-17-02; am. 4-27-04;

am. 10-12-04; am. 6-1-19).

j. Request for Reconsideration:

If an application is denied or conditionally approved, the applicant may request in writing, within 21 calendar days after the decision, a reconsideration of the decision by Planning and Zoning. The request for reconsideration shall state specific reasons or changes for the reconsideration. Planning and Zoning shall act upon the request for reconsideration within 10 working days of its receipt. Failure to act shall constitute denial of the request for reconsideration. No appeal to the Board of Adjustment shall be permitted unless a request for reconsideration was previously filed and denied. (orig. 8-25-86; am. 9-24-91; am. 8-8-95; am. 12-17-02; am. 4-27-04; am. 5-20-08)

k. Appeals:

If Planning and Zoning denies the request for reconsideration, the applicant may submit a written appeal to the Board of Adjustment. The appeal must be received by the secretary of the Board of Adjustment within 30 calendar days of the date of denial. (orig. 8-25-86; am. 9-24-91; am. 8-8-95; am. 12-17-02; am. 4-27-04; am. 10-12-04; am. 12-14-04; am. 5-20-08)

l. Permit Limitations:

The permit shall be limited to work shown on the approved plans. Such plans shall contain guidelines, conditions, and/or restrictions as are necessary to comply with the performance standards. At any time during the plan review or in the event unforeseen conditions arise during completion of the project, the County may require revision of the plans as necessary to ensure compliance with the performance standards. (orig. 8-25-86; am. 9-24-91; am. 8-8-95; am. 3-23-99; am. 12-17-02; am. 10-12-04; am. 5-20-08)

m. Amendments:

Modifications to the approved plans are subject to an Administrative Review process. Modifications shall comply with the Plans and Specifications requirements and the performance standards as outlined in this Section, unless relief is granted through the appropriate process. (orig. 8-25-86; am. 3-23-99; am. 10-12-04; am. 7-17-18; am. 6-1-19)

n. Validity:

The approval of plans and specifications shall not be construed as an approval of any violation of the provisions of this section or of any other applicable laws, rules or regulations and shall not prevent the County from thereafter requiring the correction of errors in said plans and specifications or from preventing work being carried on thereunder in violation of this section or any other applicable law, rule or regulation. The issuance of a Grading Permit prior to any Plat approval shall in no way bind the Planning Commission or the Board of County Commissioners in the approval or denial of a Plat application, and the applicant's grading activities are at the applicant's risk. (orig. 8-25-86; am. 9-24-91; am. 8-8-95; am. 12-17-02; am. 10-12-04)

2. Grading Permit Inspections

a. Upon approval by Planning and Zoning, the approved plans will be referred to an Engineering Inspector for permit issuance. (orig. 10-12-04: am. 5-20-08; am. 4-20-10; am. 7-17-18)

b. The County may inspect the site and perform any necessary tests from time to time to ensure compliance with the permit conditions. (orig. 7-17-18).

c. Final inspections shall confirm that the completed structural and/or non-structural water quality control measure operates in accordance with the approved plans. (orig. 6-1-19)

d. All applicable development sites must have operational permanent water quality control measures at the completion of the site. In the case where permanent water quality control measures are part of future phasing, the permittee must have a mechanism to ensure that all control measures will be implemented, regardless of completion of future phases or site ownership. In such cases, temporary water quality control measures must be implemented as feasible and maintained until removed or modified. All temporary water quality control measure must meet one of the design standards in the MS4 Permit. For the purpose of this section, completion of a site or phase shall be determined by the issuance of a certificate of occupancy, use of the completed site area according to the site plan, payment marking the completion of a site control measure, the nature of the selected control measure or equivalent determination of completion as appropriate to the nature of the site. (orig. 6-

1-19)

e. Time Limits: The work associated with the permit shall be completed within 2 years of the date of permit issuance, unless an extension has been granted by Transportation and Engineering. A request for an extension shall be submitted in writing no later than 10 calendar days prior to the expiration of the permit. Transportation and Engineering may grant an extension to the permit up to 1 year. Additional extensions may be granted by Transportation and Engineering to allow the establishment of permanent erosion and sediment control measures. (orig. 8-25-86; am. 9-24-91; am. 8-8-94; am. 3-23-99; am. 12-17-02; am. 10-12-04: am. 5-20-08; am. 10-13-09; am. 7-17-18)

E. Plans and Specifications

1. Grading, Erosion and Sediment Control Plan

The proposed grading, erosion and sediment control plan and specifications shall demonstrate compliance with the performance standards and shall be prepared on sheets 24 inches by 36 inches, or as otherwise approved by Planning and Zoning, and stamped and signed by a Colorado registered professional engineer. (orig. 8-25-86; am. 9-24-91; am. 10-12-04; am. 7-17-18; am. 6-1-19)

For graded areas between 0.5 and one acre, the County may waive the requirement for a topographic map and the requirement that the grading plans be prepared, stamped and signed by a Colorado registered professional engineer, where the applicant demonstrates an engineered grading plan and/or topographic map is not necessary to comply with the performance standards set forth herein. (orig. 9-24-91; am. 8-8-95; am. 12-17-02; am. 10-12-04; am. 7-17-18; am. 6-1-19)

The grading, erosion and sediment control plan shall include the following unless waived or exempted by Planning and Zoning herein. (orig. 8-25-86; am. 9-24-91; am. 10-12-04; am. 7-17-18; am. 6-1-19)

a. A map which shows the items listed below. Acceptable map scales are 1 inch to 10, 20, 30, 40, 50, 60 or 100 feet. (orig. 8-25-86; am. 9-24-91; am. 10-12-04)

(1) A vicinity map (not to scale) indicating the location of the site relative to the principal roads, lakes or dams, and watercourses in the area. (orig. 8-25-86; am. 9-24-91)

(2) A title block which includes the title of the Grading Plan, purpose and nature of the grading project and, if applicable, states the use of earth material to be removed from the site. The name of the engineer who prepared the plans should also be included in the title block. (orig. 8-25-86; am. 9-24-91)

(3) The complete site boundary and locations of any easements and Rights-of-Way traversing and adjacent to the property, appropriately labeled and dimensioned. (orig. 8-25-86)

(4) The location of existing roads, buildings, wells, pipelines, watercourses and other structures, facilities and features of the sites, and the location of all improvements on adjacent land within 50 feet of the site's boundary. (orig. 8-25-86)

(5) The location and nature of known or suspected highly erodible soils or geologic hazard areas. (orig. 8-25-86; am. 9-24-91)

(6) A topographic map which shows the affected area. The map shall show affected areas outside the permit boundaries, such as drainages. Contour lines shall be at 5-foot intervals or at an interval of greater detail if necessary to accurately show topographic features and drainage patterns, and the configuration of the ground before and after grading. The existing and final contours shall be shown at 2-foot intervals for subdivisions within the plains area and contours at 5-foot intervals for subdivisions within the mountain areas including the method utilized to obtain all contour intervals. Contours shall be accurate to within one-half (1/2) contour interval and elevations shall be based on United States Geologic Survey (USGS) sea level datum. Except for access permits, USGS quad maps shall not be accepted as evidence for topographic contours. (orig. 8-25-86; am. 9-24-91; am. 3-23-99; am. 10-12-04; reloc. 12-6-22)

(7) The location, extent and finished surface slopes of all final cut and fill lines. (orig. 8-25-86)

(8) The 100-year flood plain boundaries. (orig. 8-25-86)

(9) The location of any existing or proposed flood control facilities, wells or Onsite Wastewater Treatment System in the vicinity of the permit area. Temporary access to the well and Onsite Wastewater Treatment System shall be depicted. (orig. 8-25-86; am. 9-24-91; am. 7-17-18; am. 6-1-19)

(10) The location where any earth materials and topsoil will be stockpiled. Include estimated stockpile volume. If the stockpile will reach into adjacent properties, approval from the property owner shall be required. (orig. 8-25-86; am. 9-24-91; am. 7-17-18)

(11) The north arrow, the scale, and the date. (orig. 8-25-86)

(12) The general location and character of vegetative cover on the site and the location of all major rock outcrops. (orig. 8-25-86; am. 9-24-91)

b. Typical cross sections (not less than two) of all existing and proposed graded areas taken at intervals not exceeding 200 feet and at locations of maximum cuts and fills where such cuts and/or fills exceed 10 feet in height. (orig. 8-25-86; am. 9-24-91)

c. A table of the volume of cut, volume of fill, volume of material to be exported offsite, the steepest proposed slopes, the total area of land disturbance, the existing impervious area, the proposed impervious area (total impervious area for the site) and the area of land disturbance treated by a water quality control measure per the SDDTC. An example of this table is shown below and the table shall be placed on page 1 of the plan set. (orig. 8-25-86; am. 9-24-91; am. 6-1-19; am. 12-6-22)

Total Area of Land Disturbance	acres
Volume of Cut	cy
Volume of Fill	cy
Volume of Material to be Exported Offsite	cy
Existing Impervious Area	acres
Proposed Impervious Area	acres
Area of Land Disturbance Treated by a Permanent Water Quality Control Measure	acres
Steepest Proposed Slope	H:V

d. The projected schedule of operations, including the following dates. The schedule dates must correspond to the permitted construction timeframe following approval: (orig. 8-25-86; am. 12-6-22)

(1) Commencement of work, including days and hours of operation. (orig. 8-25-86; am. 9-24-91)

(2) Start and finish of rough grading. (orig. 8-25-86)

(3) Completion of work in any watercourse. (orig. 8-25-86)

(4) Completion of grading, erosion and sediment control measures (Best Management Practices, BMP's). (orig. 8-25-86; am. 10-12-04; am. 6-1-19; am. 12-6-22)

(5) Maintenance schedule for grading, erosion and sediment control BMP's. (orig. 9-24-91; am. 10-12-04; am. 6-1-19)

(6) Completion of any required landscaping. (orig. 8-25-86)

e. The proposed grading, erosion and sediment control plan shall include permanent and, if applicable, temporary erosion and sediment control BMP's. The plans shall identify all structural and non-structural control measures for the applicable construction activities. The plan must contain installation and implementation specifications or a reference to the document with installation and implementation specifications for all structural control measures. A narrative description of non-structural control measures must be included in the plan. Revegetation plans shall include the seed mixture(s) including species and variety, type of seedbed preparation and method of seeding, seeding rates, seeding dates, type and application rates of fertilizer and mulch, and irrigation facilities and methods if applicable. Seed mix shall be based on the Jefferson Conservation District recommendations and/or a Planning and Zoning approved alternative. Seeding alone is not erosion control until vegetation is established. Seeding shall be combined with applicable erosion control

structural BMP's until vegetation is established. (orig. 9-24-91; am. 10-12-04; am. 7-12-05; am. 7-17-18; am. 6-1-19)

f. At a minimum, initial and final construction phases are required for all grading, erosion and sediment control plans. (orig. 7-17-18)

g. Clearly and legibly show BMPs on the plan and include standard notes and associated details for the BMPs shown on said plan. (orig. 7-17-18; am. 6-1-19)

h. If a Grading Permit Application requires an Improvement Security, a detailed improvements list is required. If the Grading Permit Application does not require an Improvement Security, the quantity of each erosion and sediment control BMP shall be provided. (orig. 6-1-19; am. 12-17-19; am. 12-6-22)

2. Soil/Geologic Investigation Report

If a soils and/or geologic investigation report is required by the County, it shall be prepared and signed by a qualified professional geologist or Colorado registered professional engineer. The report shall contain all the following as they may be applicable to the subject site: (orig. 8-25-86; am. 9-24-91; am. 8-8-95; am. 12-17-02; am. 10-12-04)

a. A site map showing the topographic features of the site and locations of all soil borings and test excavations. (orig. 8-25-86)

b. A classification of the soil types, laboratory test data, and consequent evaluation regarding the distribution and nature of existing soils. (orig. 8-25-86; am. 9-24-91)

c. A description of the geology of the site and adjacent areas when pertinent to the site. (orig. 8-25-86)

d. A suitably scaled map and cross sections showing all identified areas of historic or potential instability within and adjacent to the permit area. An evaluation of the stability of natural slopes and any proposed cut and fill slopes. (orig. 8-25-86; am. 9-24-91)

e. A description of known or inferred groundwater or excessive moisture conditions. (orig. 8-25-86; am. 9-24-91)

f. A description of the soil and geologic investigative techniques employed. (orig. 8-25-86)

g. A log for each soil boring and test excavation showing elevation at ground level and the depth of each soil or rock strata. (orig. 8-25-86)

h. Recommendations for grading procedures and specifications, including methods for excavation and subsequent placement of fill. (orig. 8-25-86)

i. Recommendations for mitigation of geologic hazards and constraints. (orig. 8-25-86; am. 12-6-22)

j. The time of year the field work was done and a list of references and other supportive data. (orig. 8-25-86)

k. Soil parameters to be used in the design of retaining walls. (orig. 9-24-91; am. 12-6-22)

l. Infiltration testing shall be completed for each control measure that utilizes infiltration. At least two tests per control measure are required. The testing shall be at an appropriate elevation and location to adequately evaluate the underlying strata. A Factor of Safety of 2 shall be applied to the final infiltration rate to account for infiltration degradation over time (orig. 12-6-22)

3. Materials Handling Plan

The proposed materials handling plan shall include BMP's for controlling waste and spill prevention and containment. (orig. 10-12-04)

F. Performance Standards for All Land Disturbance Activities

1. Control measures must prevent pollution or degradation of state waters. Control measures must also be appropriate for the specific construction activity, the applicable pollutant sources, and phase of construction. Appropriate control measures must be implemented prior to the start of construction activity, must control potential pollutants during each phase of construction, and must be continued through final stabilization. Appropriate structural control measures must be maintained in operational condition. (orig. 6-1-19)

2. Control measures must be selected, designed, installed, implemented, and maintained to provide control of all potential pollutants, such as but not limited to sediment, construction site waste, trash, discarded building materials, concrete truck washout, chemicals, sanitary waste, and contaminated soils in discharges to the MS4 and/or waterways. At a minimum pollutant sources associated with the following activities (if part of the applicable construction activity) must be addressed: (orig. 6-1-19; am. 12-6-22)

   a. Land disturbance and storage of soils. (orig. 6-1-19)

   b. Vehicle tracking. (orig. 6-1-19)

   c. Loading and unloading operations. (orig. 6-1-19)

   d. Outdoor storage of construction site materials, building materials, fertilizers, and chemicals

   e. Bulk storage of materials. (orig. 6-1-19)

   f. Vehicle and equipment maintenance and fueling. (orig. 6-1-19)

   g. Significant dust or particulate generating processes. (orig. 6-1-19)

   h. Routine maintenance activities involving fertilizers, pesticides, detergents, fuels, solvents, and oils. (orig. 6-1-19)

   i. Concrete truck/equipment washing, including the concrete truck chute and associated fixtures and equipment. (orig. 6-1-19)

   j. Dedicated asphalt and concrete batch plants. (orig. 6-1-19)

   k. Other areas or operations where spills can occur. (orig. 6-1-19)

   l. Other non-stormwater discharges including construction dewatering not covered under the Construction Dewatering Discharges general permit and wash water that may contribute pollutants to the MS4 and/or waterways. (orig. 6-1-19)

3. No Impedance to Natural Water Flow

   a. No work shall be done which may obstruct, impede or interfere with the flow of storm water in overland flows, natural drainageways, unimproved channels or watercourses, or improved ditches, channels or canals in such a manner as to cause flooding that adversely impacts adjacent and downstream properties. Any activity taking place in an area zoned Floodplain Overlay District shall meet the requirements of the Floodplain Overlay District section of this Zoning Resolution. (orig. 8-25-86; am. 9-24-91; am. 12-17-02; am. 7-17-18)

   b. Construction equipment shall be kept out of watercourses except when necessary to perform work on the approved plans. Where in-channel work is designated on approved plans, precautions shall be taken to stabilize the work area during construction to minimize erosion. The channel, including bed and banks, shall be stabilized immediately after in-channel work is completed. (orig. 9-24-91; am. 6-1-19)

   c. Where a drainageway will be crossed by construction vehicles regularly during construction, a temporary crossing shall be provided. A permit may be required from the U.S. Army Corps of Engineers and the Environmental Protection Agency prior to any disturbance in waters of the United States or federally regulated wetlands. (orig. 9-24-91; am. 12-17-02; am. 10-12-04)

4. Excavation

   Excavations shall be constructed and/or protected so that they are stable and do not endanger life or property. (orig. 8-25-86; am. 9-24-91)

5. Excavation Slope

   a. The slope of cut surfaces of permanent excavations shall not be steeper than 2 horizontal to 1 vertical (approximately 25 degrees). Steeper slopes may be permitted for grading permits with the approval of the County, provided it can be adequately demonstrated in a soils/geologic report that such slopes are stable and will not undergo accelerated erosion. The County may require the excavation to be made with a cut face flatter in slope than 2 horizontal to 1 vertical (2H:1V) if soils/geologic information submitted shows that flatter slopes are necessary for stability, adequate revegetation or maintenance. Cut slopes shall be rounded into the existing terrain to produce a contoured transition from cut face to natural ground. (orig. 8-25-86; am. 9-24-91; am. 8-8-95; am. 12-17-02; am. 6-1-19)

   b. The slope of cut surfaces which are 5 feet in height or less and are in competent bedrock may be

steeper than 2H:1V, but shall be no steeper than 1 1/2H:1V. Steeper slopes may be permitted for grading permits with the approval of the County, provided it can be adequately demonstrated in a soils/geologic report that such slopes are stable and will not undergo accelerated erosion. (orig. 9-24-91; am. 8-8-95; am. 12-17-02; am. 6-1-19)

6. Fill Placement

   Completed fills shall be stable masses of well-integrated material bonded to adjacent materials and to the materials on which they rest. Proper drainage and other appropriate measures shall be taken to ensure continuing integrity of fills. Earth materials shall be used which have no more than minor amounts of organic substances. (orig. 8-25-86)

7. Fill Compaction

   The County will require fills to be compacted to a minimum of 90 percent of maximum density as determined by ASTM D1557 unless prior approval by the County has been granted. ASTM D698 may be used for clays with a high plasticity index. The standard for fill compaction shall not apply to fills of less than 50 cubic yards which are placed on natural terrain with a slope flatter than 5H:1V, are less than 5 feet in depth, are not intended to support structures, and do not obstruct a drainage course. (orig. 8-25-86; am. 9-24-91; am. 8-8-95; am. 12-17-02; am. 10-12-04; am. 7-17-18)

8. Ground Preparation for Fill Placement

   The ground surface shall be prepared to receive fill by removing vegetation, topsoil, and other unsuitable materials. (orig. 8-25-86)

9. Fill Slopes

   The slope of all permanent fills shall not be steeper than 2H:1V. Steeper slopes may be permitted for grading permits with the approval of the County, provided it can be adequately demonstrated in a soils/geologic report that such slopes are stable and will not undergo accelerated erosion. (orig. 8-25-86; am. 9-24-91; am. 8-8-95; am. 12-17-02; am. 6-1-19)

10. Driveways and Private Streets/Roads

    a. All street, road and driveway construction shall meet the Transportation Design and Construction Manual standards. (orig. 12-17-02; am. 10-12-04; am. 11-24-15)

    b. For private streets/roads and driveways including turnarounds the maximum allowable vertical disturbance from the toe of fill to the top of cut measured perpendicular to the existing contours shall be 25 feet in vertical height. Planning and Zoning may approve vertical disturbance heights greater than 25 feet for grading permits where it is determined that slopes shall be sufficiently stabilized and restored to be congruent with surrounding conditions to the maximum extent practicable and the alignment of the driveway has been placed in the optimal location to allow for minimal disturbance. (am. 7-17-18; am. 6-1-19)

       Relief for grading permits will also be considered if the applicant demonstrates that the proposed grading plan results in less overall land disturbance and that the relief is necessary to comply with the Preservation of Existing Terrain and Vegetation and Impact Mitigation Standards below. In determining whether to approve or disapprove the request, all technical evaluations, relevant factors, standards specified in other sections, and whether the applicant has adequately addressed the provisions of this Zoning Resolution shall be considered. (orig. 8-8-95; am. 11-12-02; am. 12-17-02; am. 7-1-03; am. 10-12-04; am. 3-26-13; am. 11-24-15; am. 7-17-18; am. 6-1-19)

       (1) Parking areas adjacent to building structures and drainage facilities not a part of the streets/roads will not be considered as vertical disturbance. (reloc. 7-17-18)

    c. Widths (including shoulders) of driveways and private streets/roads shall conform to the Transportation Design and Construction Manual. (orig. 8-8-95; am. 11-12-02; am. 11-24-15)

11. Protection of Adjacent Structures

    Foundations or flatwork which may be affected by any excavation shall be underpinned or otherwise protected against settlement and shall be protected against lateral movement. Fills or other surcharge loads shall not be placed adjacent to any building or structure unless such building or structure is capable of withstanding the additional loads caused by such fill or surcharge. (orig. 8-25-86)

12. Setbacks

a. Setbacks for all grading, erosion and sediment control activities shall be at least 7 feet from property boundaries and at least 25 feet from off-site occupied structures. Planning and Zoning may waive setback requirements for land disturbance provided it can be adequately demonstrated that activities occurring within setback limitations will not adversely affect adjacent property or structures. A letter prepared by a Colorado registered professional engineer will be required that addresses the following:(orig. 8-25-86; am. 9-24-91; am. 8-8-95; am. 3-23-99; am. 4-27-04; am. 5-20-08; am. 6-1-19; am. 12-6-22)

   i. Identify any potential issues caused by grading, erosion and sediment control activities relating to existing infrastructure, drainage patterns or visual and safety impacts. (orig. 12-6-22)

   ii. Provide justification and rationale demonstrating that there will be no adverse impacts to adjacent property owners as a result of the proposed land disturbance. (orig. 12-6-22)

b. Grading for streets/roads and driveways is exempt from setback requirements if it can be adequately demonstrated that grading activities will not adversely affect adjacent properties or structures in terms of, but not limited to, runoff and slope stability. (orig. 9-24-91; am. 7-17-18)

13. Stormwater

Any required drainage and infiltration structures and devices shall be designed and constructed in accordance with standards and criteria established in the Storm Drainage Design and Technical Criteria and as listed below. (orig. 8-25-86; am. 9-24-91; am. 12-17-02; am. 10-12-04; am. 7-17-18; am. 6-1-19)

a. Drainage Structures and Devices: All drainage facilities shall be designed to carry surface and subsurface water to the nearest adequate street, storm drain, and natural watercourse or other juncture. (orig. 8-25-86)

b. Water Accumulation: All finished areas shall be graded and drained such that water will not pond or accumulate except where the end use is a pond, reservoir infiltration area or structure or detention basin. Drainage shall be affected in such a manner that it will not cause erosion or endanger the stability of any cut or fill slope or any building or structure. (orig. 8-25-86; am. 9-24-91; am. 10-12-04; am. 7-17-18)

c. Protection of Adjoining Property: When surface drainage is discharged onto any adjoining property, it shall be discharged in such a manner that it will not cause an increased hazard to the stability of any cut and fill slope or any building or structure. (orig. 8-25-86; am. 9-24-91)

d. Subsurface Drainage: Cut and fill slopes shall be provided with subsurface drainage as necessary for stability. (orig. 8-25-86)

14. Erosion and Sediment Control

The following shall apply to the control of erosion and sediment from land disturbance activities: (orig. 8-25-86; am. 10-12-04)

a. To the maximum extent practicable and in conformance with F.1., above, implementation of the erosion and sediment control plan shall precede grading activities. (orig. 9-24-91; am. 10-12-04; am. 12-6-22)

b. Upon completion of land disturbance activities, disturbed areas, except for rock cuts and fills, shall be stabilized by adequate vegetative cover consisting of at least 70% of pre-existing vegetation conditions or other permanent soil erosion control measures which prevent accelerated erosion. (orig. 8-25-86; am. 9-24-91; am. 10-12-04; am. 7-17-18)

   (1) Cuts and fills accomplished for all roads, driveways and other vehicular access shall be stabilized with adequate vegetative cover or other permanent soil erosion control measures which prevent accelerated erosion, unless the cut is in competent bedrock. (orig. 9-24-91)

   (2) No project shall cause accelerated or increased off-site erosion. (orig. 9-24-91; am. 10-12-04)

c. To the maximum extent practicable, sediment caused by accelerated soil erosion shall be removed from runoff water before leaving the site. (orig. 9-24-91; am. 10-12-04)

d. All land disturbing activities shall be designed, constructed, and phased in such a manner as to minimize the exposure of disturbed areas and to prevent accelerated soil erosion to the maximum extent practicable. (orig. 9-24-91; am. 10-12-04)

e. Cut and fill slopes shall be stabilized, and surface water damage to cut and fill slopes shall be prevented. (orig. 8-25-86)

f. Fugitive dust emissions shall be controlled using the best available control technology as defined by the Colorado Department of Public Health and Environment as of the date of permit issuance. (orig. 8-25-86; am. 9-24-91)

g. All temporary and permanent soil erosion and sediment control practices shall be maintained and repaired as needed to assure continued performance of their intended function in accordance with the details in the approved grading plans. (orig. 9-24-91; am. 10-12-04; am. 7-17-18)

h. All topsoil, where physically practicable, shall be salvaged and no topsoil shall be removed from the site except as set forth in the approved plans. Topsoil and overburden shall be segregated and stockpiled separately. Topsoil and overburden shall be redistributed within the graded area after rough grading to provide a suitable base for areas which will be seeded and planted. Runoff from the stockpiled area shall be controlled to prevent erosion and resultant sedimentation of receiving water. (orig. 8-25-86; am. 9-24-91)

i. Runoff shall not be discharged from the site in quantities or at velocities substantially above those which occurred before land disturbance except into drainage facilities whose design has been specifically approved by the County prior to the permit approval. (orig. 8-25-86; am. 3-23-99; am. 12-17-02; am. 10-12-04)

j. The landowner and/or contractor shall take reasonable precautions to ensure that vehicles do not track or spill earth materials on to streets/roads and shall immediately remove such materials if this occurs. (orig. 8-25-86; am. 12-17-02; am. 10-12-04)

k. Should an increase in sediment discharge occur or become imminent, the landowner and/or contractor shall immediately take all necessary steps to control such discharge. The landowner and/or contractor shall take prompt action to resolve emergency problems. (orig. 8-25-86; am. 12-17-02; am. 10-12-04)

l. Permanent or temporary soil stabilization measures shall be applied to disturbed areas within 14 days after final grade is reached on any portion of the site. Soil stockpiles shall be permanently or temporarily stabilized within 14 days if the stockpile is not being actively utilized for construction purposes. Soil stabilization measures shall be applied within 14 days to disturbed areas which may not be at final grade, but will be left dormant for longer than 60 days. (orig. 9-24-91; am. 7-17-18)

15. Geologic, Floodplain, Wildfire, and Dipping Bedrock Hazards

Any activity taking place in an area zoned Geologic Hazard Overlay District or Floodplain Overlay District, or Wildland Urban Interface Overlay District, or Dipping Bedrock Overlay District shall meet the requirements of the appropriate sections of this Zoning Resolution. Land disturbance activities shall not create or aggravate unstable slopes, rockfall, landslide, or subsidence hazards or increase the risk of wildfire, flooding, or dipping bedrock hazards. (orig. 8-8-95; am. 3-23-99; am. 10-12-04: am. 10-4-22)

16. Preservation of Existing Terrain and Vegetation and Impact Mitigation

a. Grading for cut and fill slopes shall not result in a staircase effect, except that retaining walls are permitted per paragraph “e.” below. The edges of graded areas shall blend into the surrounding natural terrain/topography and contour of the land. (orig. 8-8-95; am. 11-12-02)

b. The proposed grading shall occur in such a manner that it avoids, to the extent practicable, all rock outcroppings, existing trees over 6 inches in caliper, vegetation over 8 feet in height, and riparian, wetland and critical wildlife areas. If from the original documentation and/or field investigation it appears that a less impactive alternative exists, the County may require the grading plan to be revised. (orig. 8-8-95; am. 12-17-02)

c. Excess material shall be graded in a manner which is similar to the natural topography and shall not be cast over the side of cut or fill slopes. (orig. 8-8-95; am. 11-12-02)

d. Cut slopes that are in rock and are intended to be left exposed shall be graded to obtain a natural looking appearance, to the extent possible, in form to blend with surrounding terrain. (orig. 8-8-95; am. 11-12-02; am. 10-12-04)

e. Retaining walls shall not exceed a maximum height of twelve (12) feet and shall be faced with stone or constructed with textured earth colored material that is identified in the grading plan. If a series of

retaining walls is required, the horizontal distance between walls shall be a minimum of 4 feet. The minimum distance between walls shall be increased to 6 feet if either wall exceeds 8 feet in height. Retaining walls greater than 36 inches in height shall be constructed in accordance with the design prepared by a Colorado registered professional engineer. The design may require consultation with a geotechnical engineer, shall consider such factors as expansive soils, steep slopes and vehicles or structures near the walls, and shall include the following: (orig. 8-8-95; am. 11-12-02; am. 12-17-02; am. 7-1-03; am. 10-12-04; am. 7-17-18)

(1) Construction plans indicating how the proposed wall height will vary along its length. (orig. 10-12-04)

(2) Details with elevations showing top and bottom of wall for critical points along the wall length. (orig. 10-12-04)

(3) Supporting calculations that demonstrate an adequate factor of safety (minimum 1.5) for bearing capacity, overturning, sliding, and internal stability, including surcharge loads due to sloping backfill, adjacent vehicles and structures. When global stability analysis is required the minimum factor of safety is 1.3 for both the temporary and permanent conditions. (orig. 10-12-04; am. 12-6-22)

f. The site shall be designed to use existing topography and existing vegetation to screen site disturbance. (orig. 8-8-95; am. 10-12-04)

g. Revegetation plans shall be similar to existing vegetation and feature the prominent use of plants which are indigenous to the area or as approved by the County. Seeding methods such as hydroseeding, drilling, seeding and raking in, or other seeding method may be required when necessary to quickly and effectively establish a groundcover for areas where other types of seeding may be ineffective. (orig. 8-8-95; am. 11-12-02; am. 10-12-04)

h. Any permanent erosion control and drainage improvements that are installed, as a result of land disturbance activities shall be designed to complement and blend with the natural topography of the land. (orig. 8-8-95; am. 10-12-04)

i. Where possible, turnouts shall be provided with the narrowest permissible road to minimize the extent of land disturbance. (orig. 11-12-02; am. 10-12-04)

j. When the grading operations encounter remains of prehistoric people's dwelling sites, remains, or artifacts of historical, paleontological or archaeological significance, the operations shall be temporarily discontinued. The developer shall notify Planning and Zoning, and the developer shall promptly contact the proper authorities to determine the disposition thereof. If required by state or federal authorities, the developer shall preserve the area of historical, paleontological or archaeological significance for a maximum period of 30 days to allow authorities to excavate and recover the items of significance. (reloc. 12-6-22)

17. Materials handling BMP's are required. At a minimum, BMP's shall include controlling waste such as discarded building materials, concrete truck washout, chemicals, litter and sanitary waste, as applicable. In addition, spill prevention and containment BMP's for construction materials, waste and fuel shall be provided, as applicable. (orig. 10-12-04)

18. Maximum allowable height of a temporary stockpile is 50 feet measured from existing grade. The setback of the stockpile measured from the abutting property line to the edge of the stockpile is 2 multiplied by the height of the stockpile. The edge of the stockpile shall be no closer than the grading setback (7 feet from the abutting property line). The slope shall not exceed 3H:1V unless otherwise approved by Planning and Zoning for grading permits based on existing site conditions and topographic constraints. The temporary stockpile shall remain in place no longer than two years unless otherwise approved by Planning and Zoning for grading permits based on site conditions and construction duration. (orig. 11-24-15; am. 7-17-18; am. 6-1-19; am. 12-6-22)

G. Improvement Security

1. As a condition for the issuance of a Grading Permit, the County may require an improvement security in an amount necessary to ensure compliance with the performance standards in the event of default on the part of the applicant or of denial of the case by the Board of County Commissioners. Grading Permits associated with single family attached, detached or duplex residential structures with an active building permit will not require an improvement security. An improvement security is required for improvements in the Right-Of-Way or for improvements which may affect Right-Of-Way. (orig. 8-25-85; am. 9-24-91; am.

8-8-95; am. 3-23-99; am. 12-17-02; am. 7-1-03; am. 10-12-04; am. 10-13-09; am. 6-1-19; am. 12-17-19; am. 12-6-22)

a. Except for rough grading, the amount of the security shall be 100 percent of the cost of all grading erosion and sediment control items plus 100% of the cost of the work required for public streets/roads and for private streets/roads. The amount of security for rough grading shall be 25 percent of the total cost of rough grading for all lands within the mountains and 10 percent for all lands within plains of the County. A contingency amount equivalent to 10 percent of the total cost of all work shall be added to the security amount. (orig. 3-23-99; am. 12-17-02; am. 7-17-18)

b. The improvement security shall be in the form of cash escrow or a letter of credit. (am. 3-23-99)

c. The improvement security shall remain in effect until final inspections have been made, where required, and all grading work has been accepted by the County. Final acceptance of warranted Public Improvements shall conform to the Jefferson County Land Development Regulation. Upon final acceptance of improvements or warranted Public Improvements, securities will be released. (orig. 8-25-85; am. 9-24-91; am. 8-8-95; am. 12-17-02: am. 5-20-08)

2. Any letter of credit or deposit required pursuant to this section shall be payable to the Board of County Commissioners of Jefferson County and shall be for a minimum of 2 year. (orig. 8-25-86; am. 8-8-95; am. 10-12-04; am. 5-20-08)

H. Permit Completion and Closeout

1. Notice of Intent

a. A completed Form Letter N-2 stating that the final construction and grading are in conformance with the approved overall grading plan and Notice of Intent shall be submitted to Planning & Zoning prior to issuance of the Certificate of Occupancy. Form Letter N-2 shall be completed by a Colorado registered professional engineer. (orig. 6-1-19)

2. Grading Permit

a. The conditions of approval as specified in the approval letter and/or approved plan set. (orig. 8-25-86; am. 6-1-19)

b. Jefferson County staff confirms that the completed control measure operates in accordance with the approved site plan. (orig. 6-1-19)

c. The Certificate of Occupancy for residential structures will be issued once the Grading Permit certification is accepted and the Grading Permit is closed by Jefferson County staff. (orig. 6-1-19)

I. Release of Security for Grading Permits

1. Upon completion of the following, the improvement and/or maintenance securities will be released, and/or a Certificate of Compliance will be issued. (orig. 8-25-86; am. 9-24-91; am. 8-8-95; am. 12-17-02; am. 7-17-18; am. 6-1-19)

a. Applicable provisions of this section. (orig. 8-25-86)

b. The conditions of approval of the Grading Permit. (orig. 8-25-86; am. 6-1-19)

c. Final stabilization of the site, which can include established vegetation, that will prevent accelerated erosion and other erosion control measures, where required. A uniform vegetative cover with a density of at least 70 percent of pre-disturbance levels shall be considered adequate vegetative cover for erosion control measures. (orig. 8-25-86; am. 9-24-91; am. 12-17-02; am. 7-1-03; am. 10-12-04)

d. Receipt of proof of compaction, where the compaction standard applies. Compaction tests shall be taken under the direct supervision of a geotechnical engineer. The geotechnical engineer or his designated representative shall observe grading activities on a full-time basis and shall take sufficient compaction test to enable the engineer to determine that the site is ready for the intended uses and shall so state on the compaction report. Compaction reports shall be signed and sealed and dated by a Colorado registered professional engineer. Compaction reports shall include the moisture density curves, location of test sites, soil types(s), density results, type of test and if a failing test, retesting of the site. The engineer shall provide a complete set of all test and observations and a report stating that the grading activities have been completed in substantial conformance with the approved grading plan, the requirements of this section, and the Land Development Regulation. (orig. 9-24-91; am. 3-23-99; am. 10-12-04)

2. An as-built plan is required by the County for the following:
   a. Land disturbance activities that occur in a Floodplain Overlay District.
   b. Large fills (greater than 1000 cubic yards).
   c. Retaining walls as designated on the approved plans.
   d. The construction deviates from the approved plans.
   e. Permanent non-structural and structural water quality control measures including dimensions, volume calculations and overall compliance with approved plans.
   f. Other activities as required by Performance Guarantee and Warranty Section of the Land Development Regulation. Orig. 9-24-91; am. 8-8-95; am. 12-17-02; am. 10-12-04; am. 7-17-18)
3. Upon completion and acceptance of all items listed on the list of improvements and associated costs, the project performance guarantee may be reduced to the amount shown on the Exhibit A for adequate revegetation and temporary erosion and sediment control. Revegetation means that a density of at least 70 percent of the pre-disturbance levels or equivalent permanent methods have been employed. (orig. 12-17-02; am. 10-12-04)
4. However, upon failure to complete the work, failure to comply with all of the terms of the permit or failure of the erosion and sediment control measures to function properly, the County may perform the required work or cause it to be done and collect from the permittee or surety all costs incurred, including administrative and inspection costs. Any unused portion of a deposit shall be refunded to the permittee after deduction by the County of the cost of the work. (orig. 8-25-86; am. 10-12-04; am. 7-17-18)

J. Enforcement

1. Inspections

   The County may inspect the site and perform any necessary tests from time to time to ensure compliance with the permit conditions. (orig. 9-24-91; am. 8-8-95; am. 3-23-99)

2. Suspension and Revocation of Permit

   The County may suspend, limit or revoke a permit for violation of any provision of this section, violation of the permit or misrepresentations by permit holder, his agents or his employees or independent contractors under contract with the permittee for a Notice of Intent or Grading Permit for an individual lot or within a common plan of development. The decision of the County to suspend, limit or revoke a permit may be appealed to the Board of Adjustment. No work shall be performed while an appeal is pending except as authorized by the County. (orig. 8-25-86; am. 9-24-91; am. 8-8-95; am. 12-17-02; am. 6-1-19)

3. Enforcement Response
   a. The escalation process for enforcement actions includes verbal warnings, written notifications, revocation of permits, denial of plan review, withholding of permits, withholding inspections, stop work orders, issuance of zoning violations (civil process), issuance of illicit discharge violations (civil process), fines associated with the illicit discharge violation and/or using the performance guarantee to hire a separate contractor to complete the work. The escalation process does not have to occur in that order. (orig. 6-1-19; am. 12-6-22)
   b. The escalation process for chronic and recalcitrant violators of control measure requirements includes verbal warnings, written notifications, revocation of permits, denial of plan review, withholding of permits, withholding inspections, stop work orders, issuance of zoning violations (civil process), issuance of illicit discharge violations (civil process), fines associated with the illicit discharge violation and/or using the performance guarantee to hire a separate contractor to complete the work. The escalation process does not have to occur in that order. (orig. 6-1-19; am. 12-6-22)

3. Court Action

   Nothing in this section shall be construed to prevent the Attorney's Office, at their discretion, from filing a court action based upon a violation or potential violation of this section. (orig. 3-23-99)

4. Right of Entry

   Whenever necessary to enforce the provisions of this section the County can enter the premises at all reasonable times to perform any duty imposed by this section. If such entry is refused, the County shall have recourse to every remedy provided by law to secure entry. If a Land Disturbance Permit is

suspended or revoked, or if a Stop Work Order has been issued, the County shall have the right to enter the site to complete the work allowed under the grading permit. (orig. 8-25-86; am. 9-24-91; am. 8-8-95; am. 3-23-99; am. 12-17-02; am. 10-12-04; am. 7-17-18)

5. Stop Work Orders

   When any work is being performed which is not in compliance with an approved permit and/or the provisions of this section or any other applicable law, rule or regulation, the County can order the work stopped by serving written notice on any personnel engaged in performing the work. Such person shall immediately stop such work until authorized by the County to proceed. If there are no persons present on the premises, the notice may be posted in a conspicuous place and the notice shall state the nature of the violation. The notice shall not be removed until the violation has been vacated or authorization to remove the notice has been issued. Failure to comply with any Stop Work Order is a violation of the Zoning Resolution, the Grading Permit and/or the Notice of Intent. (orig. 8-25-86; am. 9-24-91; am. 8-8-95; am. 3-23-99; am. 12-17-02; am. 10-12-04; am. 7-17-18)

6. Violations of Other Regulations

   Violations of this section may also cause violations of other State and/or Federal regulations and result in additional fines and penalties. (am. 10-12-04)

ZONING RESOLUTION SECTION 2 – REDMARKED COPY

Section 2 - General Provisions and Regulations

(orig. 7-28-58; am. 2-6-84; am 7-1-03)

A. Amendment of Underlying Zones

Any amendment to any underlying conventional zone district, including the Planned Development Zone District, shall in no way supersede or except any existing or subsequently adopted overlay district. (orig. 6-15-76)

B. Modification of Lots or Structures

No lot, or any structure thereon, shall be modified in any way which will not conform to the applicable zone district regulations, except: (orig. 7-28-58; am. 9-6-77)

1. Where the Board of Adjustment, within its authority, grants a variance; or (orig. 7-28-58)
2. Where the Director of Planning and Zoning grants an administrative exception; or (orig.7-17-18)
3. Where a portion of property has been acquired by an authorized public entity. (orig. 7-28-58; am. 9-6-77)

C. Structures Per Lot

1. Every building shall be constructed and located on a single lot or combination of lots that have been merged, and no lot shall have more than 1 main building, except as otherwise provided by this Zoning Resolution. (orig. 7-28-58; am. 9-6-77; am. 3-26-13)
2. One or more main non-residential or multi-family structures per lot are allowed pursuant to the requirements of the Land Development Regulation or the Policies and Procedures Manual. (orig. 3-8-82; am. 6-14-88; am. 12-17-02)
3. Delineation of building envelopes is not required for accessory buildings, provided that all easements and applicable setbacks are observed. (orig. 6-14-88)
4. No structure shall be placed on a zone district line where such line crosses any portion of a property except where both zone districts would allow the use, and where both zone districts have the same setback limitations. (orig. 7-1-03)

D. Permit Requirements

1. Building Permit
   a. It shall be unlawful for any person, firm or corporation to erect, construct, reconstruct or structurally alter any building or other structure without first obtaining both of the following: (orig. 5-6-46; am. 12-26-62; am. 9-6-77; am. 8-6-80; am. 5-3-94)
      (1) Zoning approval from Planning and Zoning including payment of a nonrefundable processing fee in an amount established by the Board of County Commissioners. (orig. 5-3-94; am. 5-25-04; am. 5-20-08)
      (2) A Building Permit from Building Safety. (orig. 5-3-94; am. 5-25-04)
   b. A Building Permit shall not be issued unless the lot or parcel is a proper division of land in accordance with Section 30-28-101(10) et. seq. C.R.S., as amended, unless it is the result of a process that has been exempted from the term “subdivision” and “subdivided land” by the Board of County Commissioners. (orig. 4-20-10)
   c. A Building Permit shall not be issued unless the plans and the use conform to this Zoning Resolution and are approved by Planning and Zoning and Building Safety. (orig. 5-6-46; am. 12-26-62; am. 9-6-77; am. 5-25-04; am. 5-20-08)
   d. A Building Permit shall not be issued for properties with the following situations:
      (1) Multiple, unmerged lots or parcels are utilized in order to meet minimum zoning requirements for lot size or the Public Health requirements at the time of permit application; (orig. 6-15-04; am. 10-13-09; reloc. and am. 7-17-18)
      (2) Underlying setback(s) cannot be met from interior property line(s) and multiple lots are utilized as part of permit process; (orig. 6-15-04; reloc. 7-17-18)

(3) A well is located on a separate lot or parcel where multiple lots or parcels are required to meet minimum zoning requirements at the time of permit application; (orig. 6-15-04; reloc. 7-17-18)

(4) An accessory structure proposed on an adjoining lot where the primary structure is located on a separate lot; or (orig. 6-15-04, am. 10-25-05; reloc. 7-17-18)

(5) An Onsite Wastewater Treatment System is located on a separate lot or parcel where multiple lots or parcels are used in combination to meet minimum zoning requirements at the time of permit application. (orig. 6-15-04; am. 10-25-05; reloc. 7-17-18)

e. Any building, structure or use which is not in compliance with the plans or use approved by Planning and Zoning shall constitute a violation of this Zoning Resolution. (orig. 6 14 88; am. 5-25-04; am. 5-20-08)

f. The owner, at the time of issuance of the Building Permit, and the person to whom the permit is issued shall be responsible for compliance with all setback requirements set forth in this Zoning Resolution for the building or structure covered by the permit. (orig. 9-6-77)

g. An Improvement Location Certificate (ILC), stamped by a registered surveyor, licensed in the State of Colorado, shall be required as a site plan for all Building Permits for new or replacement structures, or modifications to the footprint of existing structures. (orig. 7-17-18; am. 1-28-25)

(1) However, an Improvement Survey Plat (ISP) shall be required in lieu of an ILC as a submittal item when reduced setbacks for the proposed structure were approved by either the Director of Planning and Zoning, or the Board of Adjustment. (orig. 7-17-18)

(2) The ILC must show the structure(s) on adjacent properties when the zone district specifies a minimum separation between buildings. (orig. 7-17-18)

h. Verification of Setbacks Requirements (orig. 7-17-18):

(1) A Setback Verification Form, certified by a registered surveyor, licensed in the State of Colorado, shall be submitted to Planning & Zoning upon completion of concrete/foundation form placement, and prior to sheathing for Building Permits under the following conditions: (orig. 7-17-18; am. 1-28-25)

(a) Where a planned setback for a detached accessory structure is less than 3 feet in the Plains areas or 5 feet in Mountain areas from the required setback for the applicable zone district; or (orig. 7-17-18)

(b) Where a planned setback for an addition to a primary structure is less than 3 feet in the Plains areas or 5 feet in Mountain areas from the required setback for the applicable zone district; or (orig. 7-17-18)

(c) Reduced setbacks for the proposed structure were approved by either the Director of Planning and Zoning, or the Board of Adjustment. (orig. 7-17-18)

(2) For Building Permits for new primary structures where a setback verification form is not required, and where a proposed setback is less than 3 feet in the Plains area or 5 feet in the Mountain areas from the required minimum setback for the applicable zone district, prior to the rough framing inspection, an Improvement Location Certificate, certified by a registered surveyor, licensed in the State of Colorado, shall be submitted to Planning & Zoning to verify that the required setbacks are being met. (orig. 7-17-18)

i. Fire Protection: A written statement from the appropriate fire protection district, indicating that the property, for which the Building Permit is applied for, is within the boundaries of the fire protection district, and will be served by said fire protection district. If the property is not located within a fire protection district, a written statement from a local government indicating that they will provide service to the property shall be required. (orig. 1-18-22; am. 1-28-25)

(1) The above written statement shall be submitted for new structures, additions of any size, accessory dwelling units, commercial permits and any changes that modify roads or gates. The following shall be exempted from this requirement: (Orig. 1-28-25)

(a) Residential interior remodels with no additional square footage, and; (orig. 1-28-25)

(b) Outdoor decks associated with residential structures. (orig. 1-28-25)

j. Access Standards: Before any Building Permit for a new dwelling, commercial building, industrial building, or other main building, or to replace an existing dwelling, commercial building, industrial building, or other main building, or for additional space of 400 square feet or more, measured cumulatively, may be issued, the applicant must meet the access requirements listed below. These access standards shall be deemed to be general standards that supersede conflicting provisions in any Official Development Plan. (orig. 9-6-77; am. 12-5-95; am. 12-17-02; am. 5-20-08, am. 4-20-10)

(1) Right of Access: Evidence must be submitted demonstrating that the applicant has a right of access to a county, state or city maintained street/road. If the applicant's property does not have direct access to a county, state or city maintained street/road, then the offsite portion of the access that connects to the county, state or city maintained street/road must be in conformance with one or more of the following: (orig. 12-5-95; am. 12-17-02; am. 7-1-03; am. 10-25-05; am. 5-20-08; am. 4-20-10)

(a) Right-of-way that has been dedicated and accepted by the county, the state or a city, but is not maintained by the county, the state or a city. (orig. 4-20-10)

(b) Right-of-way that has been dedicated to the county or the public, but has not been accepted by the county, and is not maintained by the county, the state or a city. (orig. 4-20-10)

(c) A recorded easement that gives the applicant a right of use. Planning and Zoning will review the access information provided by the applicant and information of public record, to determine the apparent right to use the access easement. Planning and Zoning is not making a legal determination as to the right of the use, only a determination that the access is sufficient for the issuance of a building permit. (orig. 4-20-10)

(d) A declared access from a recorded court decree that gives the applicant a right of use. (orig. 4-20-10)

(e) An existing access across privately owned property that has been declared a "road of record" by the Director of Planning and Zoning. The Director of Planning and Zoning's determination of a "road of record" is a determination of an apparent right to use the access for the purpose of issuing the building permit, not a legal determination as to the right of the use. The Director of Planning and Zoning may declare an access a "road of record" if it meets the following criteria: (orig. 4-20-10; am. 3-3-15)

(e-1) The access serving the parcel has been used for at least twenty (20) consecutive years. (orig. 4-20-10)

(e-2) The access does not cross property owned by a public entity or other entity over which prescriptive rights cannot be established. (orig. 4-20-10)

(e-3) The applicant has made a reasonable attempt to obtain an access easement or other acceptable legal right to use the access road and has been unsuccessful. (orig. 4-20-10)

(f) Any access right that is not identified above but is deemed sufficient by the County Attorney's Office for the purpose of issuing a building permit. An example of when this provision may be used would be when an access crosses property that is owned by a public entity or other entity over which prescriptive rights cannot be established, and a letter of authorization for such access road is provided by such entity. (orig. 4-20-10)

(2) Right of Access Width: The right of access width must comply with the roadway standards of the Transportation Design and Construction Manual~~, or an alternative standard as approved by the fire protection district~~. The Transportation Design and Construction Manual standards for widths of streets/roads and driveways is established based on the existing and/or potential use of the access system. (orig. 12-5-95; am. 12-17-02; am. 7-1-03; am. 10-25-05, am. 4-20-10; am. 11-24-15; am. 7-17-18; am XX-XX-XX)

(3) Physical Location of Access: The physical location of the access must closely align with the described limits of the right of access. If the right of access is based on a centerline description, then the centerline of the physical access shall be located along the centerline description. The evaluation of the physical location of the access shall be completed to a point where the street/road connects to a county, state or city maintained street/road. Planning and Zoning will review the physical location of the access based on documents provided by the applicant, information of public record and with the use of cartographic information. If necessary to locate and clarify access, a survey may be required. Planning and Zoning is not making a legal determination as to the location of the street/road with respect to the right of access. The provisions of this section do not apply if the right of access is a "road of record". The provisions of this section may be determined not to apply to an alternate right of access approved by the County Attorney's Office. (orig. 4-20-10)

(4) Physical Standard of Access: ~~The physical access must comply with the standards of the Transportation Design and Construction Manual.~~ The evaluation of the physical access shall be completed ~~to~~ both on-site and off-site to a point where the street/road or driveway connects to a county, state or city maintained street/road. For the evaluation of the physical access standards, different requirements are established for the different building permit types as listed below~~The Transportation Design and Construction Manual standards for streets/roads and driveways is established based on the existing and potential use of the access system and does allow for alternate standards to be approved by the appropriate fire protection district. The fire protection district may require additional improvements such as fire sprinklers and cisterns as a condition of their approval of an alternate standard. If improvements are required based on this evaluation, then the following shall apply~~: (orig. 12-5-95; am. 6-18-02; am. 12-17-02; am. 10-25-05; am. 5-20-08; am. 4-20-10; am. 11-24-15; am. XX-XX-XX)

(a) All Building Permits (except those for additions or non-habitable detached structures): The applicant's design engineer must evaluate the access, and identify any necessary improvements to bring the access into compliance with the standards of the Transportation Design and Construction Manual. The Transportation Design and Construction Manual standards for streets/roads and driveways is established based on the existing and/or potential use of the access system. (orig. XX-XX-XX)

(b) Building Permits for additions, residential interior remodels, or non-habitable detached structures: The applicant shall provide a letter from the Fire Protection District indicating if the existing access is acceptable. The Fire Protection District may add conditions to the acceptance of access as deemed necessary. (orig. XX-XX-XX)

The Transportation Design and Construction Manual details the relief process for any street/road or driveway that cannot meet the applicable access standards. (orig. XX-XX-XX)

~~(a) Design and construction compliance, through the appropriate county process, shall be required for those portions of the access that are located within county right-of-way, public right-of-way or on land under the control of the person or entity seeking the Building Permit, and for any additional requirements that the fire protection district may have as a condition for their approval of an alternate access standard. A Stop Work Order for a building permit may be issued for failure to construct the improvements required by this section in accordance with the approved plans. (orig. 12-5-95; am. 12-17-02; am. 10-25-05; am. 4-20-10)~~

~~(b) When design and construction compliance would involve construction on land that is not under the control of the person or entity for whom a Building Permit is sought, and is not located within county or public right-of-way, then the applicant shall submit a written advisory statement from the local fire protection district describing whether such portion of the private street/road and/or driveway is deemed acceptable for emergency vehicle use. If access is not deemed acceptable for emergency vehicle use by the Fire Protection District, the letter shall identify the improvements that the Fire Protection District believes are necessary for the access to be acceptable for emergency vehicle use. (orig. 5-20-08; am. 10-13-09; am. 4-20-10)~~

~~Should the Fire District deem the access not acceptable for emergency vehicle use, the applicant may choose to either: (orig. 5-20-08)~~

~~(b-1) Arrange to correct all access deficiencies and obtain a new advisory statement from the Fire Protection District stating that the access is acceptable for emergency vehicle use, or (orig. 5-20-08)~~

~~(b-2) Sign an affidavit of understanding, on a form provided by Planning and Zoning, stating that the applicant is aware that emergency services may be nonexistent, diminished, or slowed for the site and agreeing to indemnify, defend, save and hold the County, its agents and employees harmless from any claims, demands and liability resulting from or arising out of the construction, installation and use of the structures, devices or improvements by the Owner(s), their heirs, successors and assigns. If the applicant chooses this option, then both the affidavit of understanding and the statement from the Fire Protection District shall be recorded with the Jefferson County Clerk and Recorder. (orig. 5-20-08; am. 4-20-10)~~

(5) Previous Review of Access: If the property for which the building permit is sought has gone through an approved Rezoning, Special Use, Plat, Exemption, Minor Adjustment, Site Development Plan, Grading Permit, or Notice of Intent subsequent to April 20, 2010, then the access verification that occurred during that process shall be deemed sufficient for the building permit process, unless the access being proposed for the building permit is not consistent with what was previously reviewed or the access standards of this section have been revised subsequent to the approval of the application. For Rezoning and Special Use applications, if the provisions of the Physical Standard of Access were not reviewed during the process, then those provisions must be satisfied prior to the issuance of the building permit. (orig. 4-20-10)

2. Miscellaneous Zoning Permit

a. It shall be unlawful for any person, firm or corporation to erect, construct, reconstruct, structurally alter any building or structure, and/or commence any of the following activities without first obtaining a Miscellaneous Zoning Permit. The permit shall be valid for one year, all work must be completed within this time frame or a new or renewal permit will be required. Planning and Zoning may request documentation to ensure compliance with the regulations. (orig. 5-3-94; am. 3-28-00; am. 5-25-04; am. 5-20-08; am. 3-26-13)

(1) Any structure not requiring a Building Permit, including but not limited to entry features, gazebos, retaining walls over 36 inches in height, decks less than 30 inches but greater than 12 inches in height, chicken coops, and beehives. (orig. 5-3-94; am 3-28-00; am. 12-17-02; am. 3-26-13; am 5-10-22)

(a) Mini-structures that are less than 200 square feet, 14 feet or less at the peak, and do not house livestock do not require a permit (orig. 5-10-22)

(2) Recreation facilities, including but not limited to tennis courts, swimming pools, playgrounds, and golf courses. (orig. 5-3-94; am. 7-17-18)

(3) Broadcasting and receiving devices, including but not limited to private satellite dishes over 18 inches in diameter, television and/or radio towers, cellular towers, antenna, and ham radio towers. (orig. 5-3-94; am. 3-28-00; am. 12-17-02)

(4) Temporary structures not requiring a Building Permit, including but not limited to sales and/or security trailers, temporary buildings and/or facilities, and mobile homes. Temporary uses and/or structures, including but not limited to fireworks stands, Christmas tree sale lots, parking lot sales and seasonal produce and/or flower stands. (orig. 5-3-94; am 5-10-22)

(5) Home occupations as outlined in the Home Occupations Section of this Zoning Resolution. (orig. 5-3-94; am. 3-26-13)

(6) Group living facility for more than 3 unrelated persons. (orig. 5-25-04)

(7) Any gate across access that serves a parcel or parcels, a tract or tracts, or a lot or lots. A Miscellaneous Zoning Permit issued for such purpose shall first be approved by the applicable fire protection district. Access through the gate shall be granted to beneficiaries of any easements and emergency service providers. (orig. 5-10-22)

(8) A noise barrier fence, maximum of 8 feet in height, may be constructed adjacent to right-of-way for an arterial or higher-class street or road. (orig. 7-1-03; am. 7-17-18; reloc. 5-10-22)

b. A Miscellaneous Zoning Permit shall not be issued unless the plans and the use conform to the

provisions of this Zoning Resolution. (orig. 5-3-94)

c. The owner, at the time of issuance of a Miscellaneous Zoning Permit, and the person to whom the permit is issued shall be responsible for compliance with all the requirements set forth in this Zoning Resolution for the building, structure and/or activity covered by the permit. (orig. 5-3-94; am. 12-17-02)

3. Short-Term Rental Permit

a. It shall be unlawful for any person, firm or corporation to operate a short-term rental without obtaining an approved Short-Term Rental Permit. In addition, the following criteria must be met before the issuance of a Short-term Rental Permit: (orig. 1-1-12)

(1) The property owner shall notify each adjacent property owner in writing by certified mail of the name and contact information for the 24-hour local primary and secondary contacts. If such local contacts change, the property owner shall notify the adjacent property owners and the Jefferson County Planning and Zoning Division of the new local contacts' information in writing by certified mail within five (5) business days of the change in local contacts. (orig. 1-1-12)

(2) The dwelling shall be equipped with operable smoke alarms, fire extinguishers and carbon monoxide alarms. An operable carbon monoxide alarm shall be installed within fifteen (15) feet of the entrance to each room used for sleeping purposes. The smoke alarms shall be installed pursuant to the current International Building Code as adopted by the Jefferson County Division of Building Safety. (orig. 1-1-12)

(3) The proposed short-term rental shall provide a minimum of one (1) off street parking spaces, plus one (1) additional space per sleeping room. (orig. 1-1-12)

(4) Proof of adequate water and sewer. (orig. 1-1-12)

(5) Legal access in conformance with the access requirements of this Zoning Resolution. (orig. 1-1-12)

(6) Proof of Fire Protection. (orig. 1-1-12)

(a) Outdoor fires using wood or charcoal for fuel are always prohibited. (orig. 1-1-12)

(7) The property owner shall provide a current sales tax license for the short-term rental issued by the Colorado Department of Revenue. (orig. 1-1-12)

b. A permit for a short-term rental shall be obtained within thirty (30) days following review by the Board of Adjustment for approval or renewal of a special exception to allow a short-term rental of a single-family dwelling. The review of the Short-Term Rental Permit application will include but is not limited to: failure to comply with any conditions set by the Board of Adjustment on approval of the special exception for short-term rentals, complaints received by the Sheriff's Office for noise or improper parking, any active zoning violations or other impacts that cause the short-term rental to become incompatible with the surrounding land uses. (orig. 1-1-12)

c. The owner at the time of issuance of a short-term rental permit and the person to whom the permit is issued shall be responsible for compliance with all the requirements set forth in this Zoning Resolution for the building, structure and/or activity covered by the permit. (orig. 1-1-12)

d. Once the short-term rental permit has been issued, the owner shall provide all rental dates to the Jefferson County Planning & Zoning Division. In turn, Planning & Zoning shall provide this information to the Jefferson County Assessor and the Colorado Department of Revenue. This report shall be filed quarterly. (orig. 1-1-12)

e. The property owner shall post the 24-hour local contact information as well as the Short-Term Renter Good Neighbor Brochure as created by the Planning and Zoning Division at a prominent location within the structure. In addition, the property owner shall provide each renter with a copy of the brochure at the time of occupancy. (orig. 1-1-12)

f. The County may revoke a Short-Term Rental Permit at any time for failure to comply with the provisions of this Zoning Resolution concerning short-term rentals and/or confirmed violation(s) of any federal, state, or local law, ordinance, or regulation. The decision of the County to revoke a Short-Term Rental Permit may be appealed to the Board of Adjustment. No short-term rental of the subject property may occur while an appeal is pending. (orig. 1-1-12)

4. Setback Criteria from Streets/Roads: Setbacks shall be measured from the private access easements, easements associated with public street/road templates set forth in the Jefferson County Transportation Design and Construction Manual or flow line/edge of pavement of public and private streets or roads, except where Planning and Zoning finds that the private access easement functions as a shared driveway, based upon criteria including the following: (orig. 3-15-82; am. 12-17-02; am. 5-20-08; am. 10-13-09; am. 3-3-15; am. 11-24-15; am. 7-17-18)

   a. Estimated current or projected average daily traffic (ADT); (orig. 3-15-82; am.10-13-09)

   b. Design and topography; (orig. 3-15-82)

   c. Providing connection between thoroughfares. (orig. 3-15-82)

   d. Number of properties served by the easement. (orig. 7-17-18)

   In the event the private access easement is determined to be functionally equivalent to a shared driveway, a minimum setback from the access easement of five (5) feet shall apply. (orig. 7-17-18)

5. General Setback Criteria:

   a. All setbacks shall be measured from the foundation or wall; however, eaves, roof overhangs, and fireplaces may protrude 24 inches into the setback. Underground counterforts and window wells may protrude into setbacks. (am. 7-17-18)

   b. The placement of improvements on any such zoned property may be further restricted by plat notes approved by the Board of County Commissioners in conjunction with an approved Plat, Exemption from Platting, or other process subject to the Land Development Regulations. (reloc. 7-17-18)

E. Zone District Boundaries

For purposes of determining zone district boundaries after vacation of a right of way dedicated or deeded to the County, the zoning applicable to the property abutting on either side of the right of way shall, after vacation, be deemed to extend to the centerline of such vacated right of way. (orig. 9-6-77)

F. Street/Road Setbacks

For purposes of measuring front, side and rear setbacks, all measurements shall be measured from the future right of way line when the street or road is designated on the "County Major Thoroughfare Plan". (orig. 7-28-58; am. 9-6-77; am. 12-17-02; am. 10-13-09)

G. Front Yard

1. On a through lot, the front yard requirements of the applicable zone district shall apply to each lot line fronting on a street. (orig. 5-6-46; am. 9-6-77)

2. Regardless of the location of, or the direction that any structure faces and regardless of where the main entryway into the structure is located, the front lot line of a lot shall be as indicated on the subdivision plat or if not shown on a Subdivision Plat, it shall be determined by the main route of access into the property. (orig. 7-28-58; am. 9-6-77; am. 12-17-02)

3. Every part of the required front yard shall be open and unobstructed from its lowest point to the sky, except for landscaping and fencing not prohibited by the appropriate Section of this Zoning Resolution; and except for entry features with a minimum 14 foot height clearance. (orig. 5-6-46; am. 12-26-62; am. 9-6-77; am. 8-6-80; am. 12-17-02; am 7-17-18)

H. Side Yard

Every part of the required side yard shall be open and unobstructed from its lowest point to the sky, except for landscaping, accessories such as clothes lines, swing sets up to 8 feet in height and fencing not prohibited by the appropriate Section of this Zoning Resolution. (orig. 5-6-46; am. 9-6-77; am. 8-6-80; am. 12-17-02)

I. Rear Yard

Every part of the required rear yard shall be open and unobstructed from its lowest point to the sky, except for landscaping and accessories such as clothes lines, swing sets up to 8 feet in height and fencing not prohibited by the appropriate Section of this Zoning Resolution. (orig. 5-6-46; am. 9-6-77; am. 8-6-80; am. 12-17-02)

J. Fences

1. Fences shall meet the standards set forth in the Zoning Resolution and applicable County Regulations. (orig. 5-10-22)

2. A noise barrier fence, maximum of 8 feet in height, may be constructed adjacent to right-of-way for an arterial or higher-class street or road. (orig. 7-1-03; am. 7-17-18; reloc. 5-10-22)

3. Fences on corner lots must comply with vision clearance triangle requirements. (orig. 7-17-18; reloc. 5-10-22)

4. Fences more than 42 inches in height are allowed, subject to the following development standards:

   a. Side-to-street setback: Fence shall be set back to the edge of the sidewalk, or at least 10 feet from the flowline of adjacent streets if no sidewalk exists. (orig. 7-17-18; reloc. 5-10-22)

   b. Front setback: Fences shall be set back to the edge of the sidewalk, or at least 10 feet from the flowline of adjacent streets if no sidewalk exists, provided the applicable zone district allows fences in the front setback. (orig. 7-17-18; reloc 5-10-22)

   c. Fences shall maintain a 25'x25' sight triangle for all driveways, both on-site and off-site, which is measured from the edge of driveway and the flowline of street/road. (orig. 7-17-18; reloc. 5-10-22)

K. Rubbish

The outdoor storage of rubbish is prohibited unless expressly allowed by the applicable zone district. (orig. 5-20-08)

L. Height Regulation

1. The height limitations established for each zone district shall apply to flagpoles; and radio, television or microwave towers (including antennas), except as otherwise provided within this section. Noncommercial antenna installations for home use of radio or television are excluded. (orig. 6-14-88; am. 6-7-94; am. 12-17-02; am. 4-20-10)

2. The height limitations established for any zone district, except Planned Development, shall not apply to chimneys, stacks, water towers, grain elevators, silos, elevators, monuments, dome spires, belfries, hangars and accessory symbols of government, religious, fraternal and civic organizations when attached to the respective building. (orig. 5-6-46; am. 9-6-77; am. 6 14 88; am. 4-20-10)

M. Dangerous and/or Wild Animals

1. Notwithstanding any other provision of this Zoning Resolution and except as provided in paragraphs L.2. and L.3. below, no person shall own, possess, harbor, maintain or keep any of the following species of animals, other than wildlife in existing natural habitat, on any property within any zone district (other than as specified in the Agricultural-Two (A-2) and Agricultural Thirty-Five (A-35) Zone Districts) in the unincorporated area of Jefferson County. The restrictions within this section apply to the A-2 and A-35 Zone Districts, when the property is at least 10 acres in size, and the keeping of dangerous and wild animals is done in accordance with an approved Special Use. (orig. 8-1-78; am. 3-28-00; am. 12-17-02; am. 3-26-13)

   a. Poisonous reptiles, species of nonpoisonous snakes which ordinarily grow to more than 6 feet in length when mature, and lizards belonging to the family Varanidae; (orig. 8-1-78)

   b. Crocodilians; (orig. 8-1-78)

   c. All species of non-human mammals except the following: (orig. 8-1-78)

      (1) Domestic cat (Felis catus); (orig. 8-1-78)

      (2) Chinchilla (Chinchilla laniger); (orig. 8-1-78)

      (3) Domestic dog (Canis familiaris); (orig. 8-1-78)

      (4) Domestic ferret (Mustela putoris furo); (orig. 8-1-78)

      (5) Mongolian gerbil (Meriones unguicularus); (orig. 8-1-78)

      (6) Guinea pig (Cavia porceilus); (orig. 8-1-78)

      (7) Hamster (Mesocricetus auratus); (orig. 8-1-78)

      (8) Domestic laboratory mouse (Mus domesticus); (orig. 8-1-78)

      (9) Domestic rabbit (Oryctolagus cuniculus); (orig. 8-1-78)

      (10) Domestic laboratory rat (Rattus rattus albino strain); (orig. 8-1-78)

      (11) Squirrel monkey (Saimiri seinrous); (orig. 8-1-78)

(12) Owl monkey (Aotus trivirgatus); (orig. 8-1-78)

(13) Woolly monkey (Lagothrix lagothrica); (orig. 8-1-78)

(14) Pygmy Goat (Goatus Minimus); (orig. 7-17-18)

(15) Miniature Pig (Göttinger minipig); (orig. 7-17-18)

(14) Domestic livestock including, but not limited to the following: horses, cattle, sheep, goats, swine, mules, donkeys, burros, llamas, alpacas, emu, and ostrich. (orig. 8-1-78; am. 12-17-02)

2. For any property zoned Agricultural-Two (A-2) and Agricultural Thirty-Five (A-35), the owner thereof shall receive Special Use approval in order to be permitted to own, possess, harbor, maintain or keep any one or more animals of the species listed in paragraph L.1. above, where the ownership, possession, harboring, maintenance or keeping of such animal(s) is necessary to a use which is otherwise in compliance with the applicable zone district regulations and is specifically for one of the following purposes: (orig. 8-1-78; am. 12-17-02; am. 3-26-13)

   a. To be used for scientific research or for production of scientific or commercial supplies or as breeding stock in connection with a business or other commercial operation or research facility established as a use upon the premises; or (orig. 8-1-78)

   b. To be used for purposes of public commercial exhibition, whether as a profit or nonprofit operation, such as a permanent zoological gardens or a temporary or traveling menagerie, circus, rodeo or livestock show. (orig. 8-1-78)

3. For any property zoned Agricultural-Two (A-2) and Agricultural Thirty-Five (A-35), the owner thereof shall receive Special Use approval in order to be permitted to own, possess, harbor, maintain or keep any one or more animals of the species prohibited under paragraph L.1. above, where the applicant demonstrates a special interest and competency in caring for such an animal or animals, and where the applicant demonstrates to the satisfaction of the Planning Commission and the Board of County Commissioners that the health, safety and welfare of humans and domestic animals in the area and of the general public is adequately safeguarded. (orig. 8-1-78; am. 12-17-02; am. 3-26-13)

4. The application for a Special Use under paragraphs: L.2. and L.3. above, shall be made to the Planning Commission. If approved by the Planning Commission, the application shall proceed to the Board of County Commissioners, which must also approve the application for the Special Use to be permitted. (orig. 8-1-78; am. 12-17-02)

5. One criterion relevant to the determination of whether to approve the Special Use shall be the agreement by the applicant that proposed facilities for the keeping of such animal(s) will be constructed and maintained in accordance with the requirements of the Colorado Division of Wildlife. (orig. 8-1-78)

   As a condition of the continued validity of any Special Use granted under paragraphs L.2 and L.3 above, the applicant must at all times ensure that adequate safeguards for the health and security of both the animal(s) and humans and domestic animals in its (their) vicinity are provided, and must at all times be in compliance with all rules and regulations of the Colorado Division of Wildlife, including permit requirements; and, in addition, the applicant must at all times keep the animal(s) securely locked in the facilities approved by the Colorado Division of Wildlife which provide such adequate safeguards. (orig. 8-1-78)

N. Sexually Oriented Businesses

1. No person may operate or cause to be operated a sexually oriented business within 1,000 feet of any of the following, whether the use or zone district listed below is unincorporated Jefferson County, an adjacent county, or within an incorporated municipality. (orig. 7-8-97)

   a. A Religious Assembly. (orig. 7-8-97; am. 3-26-13)

   b. A school meeting all requirements of the compulsory education laws of the state. (orig. 7-8-97)

   c. The boundary of any zone district in which one of the primary uses is residential. (orig. 7-8-97)

   d. A dwelling unit (single or multiple). (orig. 7-8-97)

   e. A public park. (orig. 7-8-97)

   f. A licensed childcare center. (orig. 7-8-97)

   g. An establishment holding a liquor license. (orig. 7-8-97)

2. No person may operate or cause to be operated a sexually oriented business within 1,000 feet of another sexually oriented business. (orig. 7-8-97)
3. No person may cause or permit the operation, establishment or maintenance of more than one sexually oriented business within the same building or structure or portion thereof, such as in a shopping center. A sexually oriented business may include one or more types of sexually oriented business provided it has one address and is operated as a single business entity that has one sales tax license number. (orig. 7-8-97)
4. For the purposes of this section, the distance between any two sexually oriented businesses shall be measured in a straight line, without regard to intervening structures, streets, or political boundaries, from the closest exterior structural wall of each business. (orig. 7-8-97)
5. For purposes of this section, the distance between any sexually oriented business and any Religious Assembly, school, child care center, public park, establishment holding a liquor license, dwelling unit (single or multiple) or residential zone district shall be measured in a straight line, without regard to intervening structures or objects or political boundaries, from the closest exterior wall of the structure in which the sexually oriented business is located to the nearest property line of the premises of a Religious Assembly, school, child care center, an establishment holding a liquor license, or dwelling unit (single or multiple), or the nearest boundary of an affected public park or residential zone district, whichever is closest. (orig. 7-8-97; am. 3-26-13)
6. If two or more sexually oriented businesses are within 1,000 feet of one another and are otherwise in a permissible location, the sexually oriented business which was first established and continually operating at its particular location will be deemed to be in compliance with this Zoning Resolution and the later established business(es) will be deemed to be in violation of this Zoning Resolution. (orig. 7-8-97; am. 12-17-02)
7. A sexually oriented business lawfully operating is not rendered in violation of this Zoning Resolution by the subsequent location of a Religious Assembly, school, childcare center, dwelling unit (single or multiple), public park, establishment holding a liquor license, or residential zone district within 1,000 feet of the sexually oriented business. (orig. 7-8-97; 12-17-02; am. 3-26-13)
8. All sexually oriented business shall blacken their windows or arrange the business so that the interior of the business and its stock in trade cannot be viewed from the exterior of the business. (orig. 7-8-97)

O. Bars and Taverns

1. No establishment holding a liquor license may operate within 1000 feet of a sexually oriented business. (orig. 7-8-97)
2. For purposes of this section, the distance between any sexually oriented business and any establishment holding a liquor license shall be measured in a straight line, without regard to intervening structures or objects or political boundaries, from the closest exterior wall of the structure in which the sexually oriented business is located to the nearest property line of the premises of an establishment holding a liquor license. (orig. 7-8-97)

P. Rural Cluster

Permitted uses, lot and building standards, and general requirements for specific zone districts may differ from the standards specified in this Zoning Resolution for applications undergoing a rural cluster land division. When the regulations of the rural cluster process, as contained in the Land Development Regulation, conflict with any provision of this Zoning Resolution, the provision of the rural cluster process shall control. (orig. 10-13-98; am. 12-17-02)

Q. Marijuana

1. Private Marijuana Clubs are prohibited in all zone districts as principal or accessory uses, regardless of whether any such use is operated for profit or not for profit. (orig. 4-14-14)
2. Cultivation or processing of marijuana is only allowed in an enclosed, locked structure located on a residential property which constitutes the primary residence of the cultivator/processor, and only for personal use of the cultivator/processor. No more than 6 plants may be grown on each residential property for each registered medical marijuana patient or adult age 21 or older, and in no case may more than 12 plants be grown on a residential property. Nothing in this section shall be construed to prohibit the cultivation or processing of medical marijuana by a primary caregiver for his or her patients, provided that any such primary caregiver does not exceed the limitations on number of plants set forth in this section

and is growing the plants in accordance with applicable provisions of Article XVIII, Section 14 of the Colorado Constitution; C.R.S. § 25-1.5-106, as amended; and any applicable rules promulgated under state law. (orig. 4-14-14)

STORM DRAINAGE DESIGN AND TECHNICAL CRITERIA – REDMARKED COPY

Jefferson County
Storm Drainage Design & Technical Criteria

JEFFERSON COUNTY, COLORADO PLANNING AND ZONING DIVISION

Revision Dates

The Storm Drainage Design and Technical Criteria was prepared by WRC Engineering, Inc. in May 1987 and was adopted by the Board of County Commissioners of Jefferson County, Colorado, and has since been amended on the following dates:

March 19, 1996

May 12, 1998

May 27, 2003

November 25, 2003

October 13, 2009

October 1, 2013 (Temporary Regulation Amendment)

April 1, 2014

November 24, 2015

July 17, 2018

June 1, 2019

December 17, 2019

XXXXX XX, XXXX

Jefferson County Planning and Zoning Division

100 Jefferson County Parkway, Suite 3550, Golden, Colorado 80419

303-271-8700 • http://planning.jeffco.us

Table of Contents

Chapter 1 General Provisions

1.1 Short Title
1.2 Jurisdiction
1.3 Purpose and Effect
1.4 Enactment Authority
1.5 Amendment and Revisions
1.6 Enforcement Responsibility
1.7 Review and Approval
1.8 Alternative Standard Requests & Minor Variation Requests
1.9 Interpretation
1.10 Relationship to Other Standards
1.11 Abbreviations

Chapter 2 Drainage Planning Submittal Requirements

2.1 Introduction
2.2 Phase I Drainage Report
2.3 Phase II Drainage Report
2.4 Phase III Drainage Report
2.5 Abridged Drainage Report
2.6 Exception to The Requirement for a Drainage Report
2.7 Construction Plans
2.8 As-Built Drawings and Final Acceptance Certificate

Chapter 3 Drainage Policy

3.1 Introduction
3.2 Basic Principles
3.3 Regional and Local Planning
3.4 Planning and Design

Chapter 4 Floodplain Regulations

4.1 Introduction

Chapter 5 Rainfall

5.1 Introduction
5.2 Jefferson County Rainfall Zones
5.3 Colorado Urban Hydrograph Procedure Design Storms
5.4 Time-Intensity-Frequency Curves

Chapter 6 Runoff

6.1 Introduction
6.2 Rational Method
6.3 Colorado Urban Hydrograph Procedure
6.4 Storm Flow Analysis

Chapter 7 Open Channels

7.1 Introduction
7.2 Channel Types
7.3 Flow Computation
7.4 Design Standards for Major Drainageways
7.5 Design Standards for Small Drainageways
7.6 Street/Roadside Ditches
7.7 Channel Rundowns

Chapter 8 Storm Sewers

8.1 Introduction
8.2 Construction Materials
8.3 Hydraulic Design
8.4 Vertical Alignment
8.5 Horizontal Alignment
8.6 Pipe Size
8.7 Manholes
8.8 Checklist

Chapter 9 Storm Sewer Inlets

9.1 Introduction
9.2 Standard Inlets
9.3 Inlet Hydraulics
9.4 Inlet Spacing
9.5 Inlet Capacity

Chapter 10 Streets/Roads

10.1 Introductions
10.2 Function of Streets in the Drainage System
10.3 The Allowable use of Streets/Roads as a Drainage System
10.4 Hydraulic Evaluation

Chapter 11 Culverts

11.1 Introduction
11.2 Culvert Hydraulics
11.3 Culvert Design Standards
11.4 Design Example
11.5 Culvert Sizing Criteria
11.6 Checklist

Chapter 12 Hydraulic Structures

12.1 Introduction
12.2 Conduit Outlet Structures
12.3 Channel Grade Control Structures (Check And Drop Structures)
12.4 Bridges
12.5 Irrigation Ditch Crossings

Chapter 13 Storm Water Quality Management Control

13.1 Introduction
13.2 Temporary Erosion Control for Construction Activities
13.3 Permanent Controls for Storm Water Quality Management

Chapter 14 Detention

14.1 Introduction
14.2 Detention Methods
14.3 Design Criteria
14.4 Design Standards for Open Space Detention
14.5 Design Standards for MPLD
14.6 Design Standards for Parking Lot Detention
14.7 Design Standards for Underground Detention
14.8 Design Standards for Combined Detention Ponds

Appendix

Checklist
Standard Forms

Standard Details

List of Tables

201 Drawing Symbol Criteria and Hydrology Review
501 Design Point Rainfall Values
502 CUHP Design Storms for Jefferson County (A-D)
503 Time-Intensity-Frequency Tabulation
701 Street/Roadside Ditch Capacities
801 Storm Sewer Alignment and Size Criteria
802 Energy Loss Coefficient Bends at Manholes
803 Manhole and Junction Losses
901 Standard Inlets
1001 Allowable Use of Streets/Roads for Minor Storm Runoff
1002 Allowable Use of Streets/Roads for Major Storm Runoff
1003 Allowable Flow Depths for Standard Street Templates
1004 Allowable Cross Street Flow
1005 Allowable Culvert Overtopping
1101 Hydraulic Data for Culverts
1102 Culvert Rating Example
1301 Possible Sources of Pollutants in Storm Water
1401 Weir Flow Coefficients

List of Figures

501 Rainfall Zones
502 Time-Intensity-Frequency Curves (A-D)
701 Roughness Coefficient for Grassed Channels
702 Street/Roadside Ditch Sections
703 Trickle Channel Details
704 Channel Rundown Details
801 Hydraulic Properties Circular Pipe
802 Hydraulic Properties Horizontal Elliptical Pipe
803 Hydraulic Properties Arch Pipe
901 Inlet Design Example - Minor Storm
1401 Detention Pond Outlet Configurations
1402 Detention Pond Details
1403 Weir Design Example
1404 Outlet Design Example
1405 Underground Detention
1406 Pond Forebay with Dissipator
1407 Embankment Protection Details and Rock Sizing Chart
1408 Mountain Porous Landscape Design

Chapter 1 - General Provisions

1.1 Short Title

These regulations together with all future amendments will be known as the "Jefferson County Storm Drainage Design and Technical Criteria" (hereafter called *CRITERIA*) as referenced in the Jefferson County Land Development Regulation (hereafter called *LDR) and Jefferson County Zoning Resolution (hereafter called ZR)*.

1.2 Jurisdiction

These *CRITERIA* will apply to all land within the unincorporated areas of the County, including any public lands. These *CRITERIA* will apply to all facilities constructed on County ROW, easements dedicated for public use, and to all privately owned and maintained drainage facilities, including but not limited to detention ponds, water quality facilities, storm sewers, inlets, manholes, culverts, swales and channels.

1.3 Purpose and Effect

Presented in these *CRITERIA* are the minimum design and technical criteria for the analysis and design of storm drainage facilities. All subdivisions, rural clusters, rezonings, site development plans, site approvals, land disturbance permits or any other proposed development or construction submitted for approval under the provisions of the *LDR* will include adequate storm drainage system analysis and appropriate drainage system design. Such analysis and design will meet or exceed the criteria set forth herein. Options to the provisions of these *CRITERIA* may be suggested by the applicant. The applicant will have the burden of showing that the options are equal or better. Policies and technical criteria not specifically addressed in these *CRITERIA* will follow the provisions of the Mile High Flood District (hereafter called MHFD) "Urban Storm Drainage *Criteria Manual*" (hereafter called *Manual*). The applicant is also referred to the Colorado Department of Transportation Standard Plans for additional design details not covered in these *CRITERIA* or the *Manual*. Drainage facilities in place or under construction at the time of *CRITERIA* adoption will be accepted without regard to the provisions of these *CRITERIA*.

1.4 Enactment Authority

The *LDR* has been adopted pursuant to the authority conferred within: Article 28 of Title 30 (County Planning); Article 2 of Title 43 (State, County and City Highway Systems); Article 20 of Title 29 (Land Use Control and Conservation); and other applicable sections of the CRS, as amended. As part of the authority provided by which the County promulgates the *LDR*, these *CRITERIA* are adopted by resolution.

The *LDR* refers to these *CRITERIA* being the source of County policy, guidelines, criteria and submittal requirements for storm water management issues during the development process.

1.5 Amendment and Revisions

These policies and criteria may be amended as new technology is developed and/or if experience gained in the use of these *CRITERIA* indicates a need for revision. Amendments and revisions will be made by resolution.

1.6 Enforcement Responsibility

It will be the duty of the Board of County Commissioners acting through Planning and Zoning to enforce the provisions of these *CRITERIA*.

1.7 Review and Approval

The County will review all drainage submittals for general compliance with these *CRITERIA*. An approval by the County does not relieve the owner, engineer or designer from responsibility of ensuring that the calculations, plans, specifications, construction and record drawings comply with these *CRITERIA*.

Per Colorado Revised Statute 32-11-221, improvements in or improvements that directly outfall to drainageways within the MHFD boundary must meet the requirements of MHFD's Maintenance Eligibility Program. Where this is the case, the County will refer submittals to MHFD and design, construction and revegetation must be approved by MHFD.

1.8 Alternative Standard Requests & Minor Variation Requests

Alternative Standard Requests of these *CRITERIA* will be reviewed and approved in accordance with the applicable sections in the *LDR and ZR*. Any exclusions, exemptions, waivers, and variances shall comply with the terms and conditions of the MS4 permit.

1.9 Interpretation

In the interpretation and application of the provisions of these *CRITERIA*, the following will govern:

1.9.1 In its interpretation and application, the provisions will be regarded as the minimum requirements for the protection of the public health, safety, comfort, convenience, prosperity and welfare of the residents of the County.

1.9.2 Whenever a provision of these *CRITERIA* and any other provisions of the *LDR* or any provision in any law, ordinance, resolution, rule or regulation of any kind, contain any restriction covering any of the same subject matter, whichever restrictions are more restrictive or impose higher standards of requirements will govern.

1.9.3 These *CRITERIA* will not abrogate or annul any permits or approved drainage reports, construction plans, easements or covenants issued before the effective date of these *CRITERIA*.

1.10 Relationship to Other Standards

These *CRITERIA* are consistent with the MHFD criteria. If special districts impose a more stringent criteria, this difference is not considered a conflict. If the State or Federal Government imposes stricter criteria, standards or requirements, these will be incorporated into the County's requirement after due process and public hearing(s) needed to modify the County's regulations and standards.

1.11 Abbreviations

As used in these *CRITERIA*, the following abbreviations will apply:

ASP	Aluminized Steel Pipe
BMPs	Best Management Practice(s)
CDOT	Colorado Department of Transportation
CRS	Colorado Revised Statute
CMP	Corrugated Metal Pipe
CSP	Corrugated Steel Pipe
CSPA	Corrugated Steel Pipe Arch
CUHP	Colorado Urban Hydrograph Procedure
EURV	Excess Urban Runoff Volume
FEMA	Federal Emergency Management Agency
FHAD	Flood Hazard Area Delineation
FIRM	Flood Insurance Rate Map
HDPE	High Density Polyethylene Pipe
HP	High Performance Polypropylene Pipe
JCD	Jefferson Conservation District
MDCIA	Minimized Directly Connected Impervious Area
MHFD	Mile High Flood District
MPLD	Mountain Porous Landscape Detention
NOAA	National Oceanic and Atmospheric Administration
RCP	Reinforced Concrete Pipe
ROW	Right-of-Way
USDCMUSDC	Urban Storm Drainage Criteria Manual (Manual)

Chapter 2 - Drainage Planning Submittal Requirements

2.1 Introduction

Drainage reports and plans, construction drawings, specifications and as-built information will be submitted and approved as required by the *LDR* and Building Permit Procedure. All submitted reports will be clearly and cleanly reproduced. Photostatic copies of charts, tables, nomographs, calculations or any other referenced material will be legible. Washed out, blurred or unreadable portions of the report are unacceptable and could warrant resubmittal of the report. The submittal will include a declaration of the type of report submitted (i.e., Phase-I, Phase-II or Phase-III). Incomplete or absent information may result in the report being rejected for review.

A pre-application consultation is suggested of all applicants for all processing steps of the *LDR*. The applicant will consult with Planning and Zoning for general information regarding regulations, required procedures, possible drainage problems and specific submittal requirements.

2.2 Phase I Drainage Report

For development processes that require the submittal of a Phase I Drainage Report, a Phase I Report which complies with the requirements of Section 2.2 must be submitted by the developer or owner.

This report will review at a conceptual level the feasibility and design characteristics of the proposed development. The Phase I Drainage Report will be in accordance with the following outline and contain the applicable information listed:

2.2.1 Phase I Report Contents

The following is an outline of the minimum Phase I Drainage Report requirements.

I. General Location and Description
   - A. Location
     1. Vicinity map
     2. City, County, State Highway and local streets within and adjacent to the site or the area to be served by the drainage improvements
     3. Township, range, section, 1/4 section
     4. Major drainageways and facilities
     5. Names of surrounding developments
   - B. Description of Property
     1. Area in acres
     2. Ground cover (type of ground cover and vegetation)
     3. Major drainageways
     4. Existing major irrigation facilities such as ditches and canals
     5. Proposed land use
     6. Floodplains delineated by FHAD studies or on FEMA FIRM maps
     7. Significant geologic features

II. Drainage Basins and Sub-Basins
   - A. Major Basin Description
     1. Reference and include maps of major drainageway planning studies such as FHAD reports, major drainageway planning reports and FIRMs.
     2. Major basin drainage characteristics, existing and planned land uses within the basin, as defined by Planning and Zoning
     3. Identification of all nearby irrigation facilities which will influence or be influenced by the local drainage
   - B. Sub-Basin Description
     1. Discussion of historic drainage patterns of the property in question
     2. Discussion of on-site and off-site drainage flow patterns and impact on development under existing and fully developed

basin conditions as defined by Planning and Zoning

III. Drainage Facility Design

A. General Concept

1. Discussion of concept and typical drainage patterns
2. Discussion of compliance with off-site runoff considerations
3. Discussion of anticipated and proposed drainage patterns
4. Discussion of the content of tables, charts, figures, plates or drawings presented in the report

B. Specific Details (Optional Information)

1. Discussions of drainage problems encountered and solutions at specific design points
2. Discussion of detention storage and outlet design
3. Discussion of maintenance and access aspects of the design
4. Discussion of impacts of concentrating the flow on the downstream properties

C. Specific Details (Required for any proposed modifications to the Floodplain Overlay District)

1. Discussion on whether the floodplain modification will affect off-site property
2. Discussion of the design of the modified watercourse, in conformance with MHFD and County requirements
3. Discussion of the location of the modified watercourse and reason for modifications
4. Discussion of any State and Federal permits that are required for the modification of the watercourse
5. Hydraulic and hydrologic calculations for the 100-year storm demonstrating that the modified watercourse will maintain the flood carrying capacity
6. Discussion of the maintenance requirements and identification of the organization responsible for maintenance
7. A developer and engineer's certifications as required for a Phase III Drainage Report

IV. References

Reference all criteria, master plans and technical information used in support of concept.

2.2.2 Phase I Drawing Contents

(a) General Location Map: Drawings may be 24" x 36" or 22" x 34". A map will be provided in sufficient detail to identify drainage flows entering and leaving the development and general drainage patterns. The map should be at a scale of 1" = 1000' to 1" = 4000' and show the path of all drainage from the upper end of any off-site basins to the defined major drainageways. The map should identify any major facilities from the property (i.e., development, irrigation ditches, existing detention facilities, culverts, storm sewers) along the flow path to the nearest major drainageway.

Basins and divides are to be identified and topographic contours are to be included.

(b) Floodplain Information: A copy of applicable FHAD and/or FIRM maps showing the location of the subject property will be included with the report as outlined in Section 2.2.1. All major drainageways (see Section 3.2.5) will have the floodplain defined and shown on the report drawings.

(c) Drainage Plan: Map(s) of the proposed development at a scale of 1" = 20' to 1" = 100' on a 24" x 36" or 22" x 34" drawing will be included. The plan should show the following:

1. Existing topographic contours at 2-foot maximum intervals. In mountain areas, the maximum interval is 5 feet. The contours should extend a minimum of 100 feet beyond the property lines

2. All existing drainage facilities

3. Approximate flooding limits based on available information

4. Conceptual major drainage facilities including detention basins, storm sewers, swales, riprap and outlet structures in the detail consistent with the proposed development plan

5. Major drainage boundaries and sub-boundaries

6. Any off-site feature influencing development

7. Proposed flow directions and, if available, proposed contours

8. Legend to define map symbols

9. Title block in lower right corner

2.3 Phase II Drainage Report

The purpose of the Phase II Drainage Report is to identify and/or refine conceptual solutions to the problems which may occur on-site and off-site as a result of the development. For development processes that require the submittal of a Phase II Drainage Report, a Phase II Drainage Report which complies with the requirements of Section 2.3 must be submitted by the developer or owner. The report will be prepared by or supervised by an engineer licensed in Colorado. The report will contain a certification sheet as follows:

> "This report (*plan*) for the Phase II drainage design of (*name of Development*) was prepared by me (*or under my direct supervision*) in accordance with the provisions of Jefferson County Storm Drainage Design and Technical Criteria and was designed to comply with the provisions thereof. I understand that Jefferson County does not and will not assume liability for drainage facilities designed by others."
>
> _____
>
> Registered Professional Engineer
>
> State of Colorado No. _____
>
> (*Affix Seal*)

2.4 Phase III Drainage Report

The purpose of the Phase III Drainage Report is to provide final drainage design for a project including design details for drainage facilities.

For development processes that require the submittal of a Phase III Drainage Report, a Phase III Report which complies with the requirements of Sections 2.3 and 2.4 must be submitted by the developer or owner. If applicable, the Phase III Drainage Report must address comments made during review of the Phase II Report.

The report will be prepared by or under the direction of an engineer licensed in Colorado, certified as shown below in for the Phase III report. The report must contain a developer and engineer certification sheet as follows:

> "This report (plan) for the Phase III drainage and water quality design of (name of Development) was prepared by me (*or under my direct supervision*) in accordance with the provisions of Jefferson County Storm Drainage Design and Technical Criteria and was designed to comply with the provisions thereof. I understand that Jefferson County does not and will not assume liability for drainage facilities designed by others."
>
> _____
>
> Registered Professional Engineer
>
> State of Colorado No. _____
>
> (*Affix Seal*)
>
> "(Owner/Applicant) hereby certifies that the drainage facilities for (Name of Development) will be constructed according to the design presented in this report. I understand that Jefferson County does not and will not assume liability for drainage facilities designed or reviewed by my engineer. I also understand that Jefferson County relies on the representations of others to establish that drainage facilities are designed and built in compliance with applicable guidelines, standards or specifications. Review by Jefferson County can therefore in no way limit or diminish any liability which I or any other party may have with respect to the design or

construction of such facilities."

(Owner/Applicant)_____

By: _____

Date _____

The Phase III Drainage Report will be prepared in accordance with the outline shown in Section 2.4.1. The report drawings will follow the requirements presented in Section 2.4.2 below.

Three (3) signed and stamped original copies of the approved Phase III Drainage Plan and Report will be submitted to the County for signature and retention in their files.

2.4.1 Phase II and Phase III Report Contents

The Report will be in accordance with the following outline and contains the applicable information listed:

I. General Location and Description
   A. Location
      1. Vicinity map
      2. Township, range, section, 1/4 section
      3. Local streets within and adjacent to the subdivision with ROW width shown
      4. Major drainageways, facilities and easements within and adjacent to the site
      5. Names of surrounding developments
   B. Description of Property
      1. Area in acres
      2. Ground cover (type of trees, shrubs, vegetation, general soil conditions, topography and slope)
      3. National Resources Conservation Service (NRCS) soils classification map and discussion
      4. Major drainageways
      5. General project description
      6. Irrigation facilities
      7. Proposed land use
II. Drainage Basins and Sub-Basins
   A. Major Drainage Basins
      1. On-site and off-site major drainage basin characteristics and flow patterns and paths
      2. Existing and proposed land uses within the basins if known
      3. Discussion of all drainageway planning or floodplain delineation studies that affect the major drainageways, such as FHAD Studies and Outfall System Planning studies
      4. Discussion of the condition of any channel within or adjacent to the development, including existing conditions, need for improvements and impact on the proposed development
      5. Discussion of the impacts of the off-site flow patterns and paths, under fully developed conditions
      6. Identification of all irrigation facilities within the basin which will influence or be influenced by the local drainage
   B. Sub-Drainage Basins
      1. On-site and off-site minor drainage basin characteristics and flow patterns and paths under historic and developed conditions
      2. Existing and proposed land uses within the basins
      3. Discussion of irrigation facilities that will influence or be impacted by the site drainage
      4. Discussion of the impacts of the off-site flow patterns and paths, under fully developed conditions
III. Drainage Design Criteria
   A. Regulations: Discussion of the optional provisions selected or the deviation from the *CRITERIA*, if any, and its justification

B. Development Criteria Reference and Constraints
   1. Discussion of previous drainage studies (i.e., project master plans) for the site in question that influence or are influenced by the drainage design and how the plan will affect drainage design for the site
   2. Discussion of the effects of adjacent drainage studies
   3. Discussion on drainageways and storage facilities and how they interrelate to water rights
   4. Discussion of the drainage impact of site constraints such as streets, utilities, light rail rapid transit, existing structures and development or site plan
C. Hydrological Criteria
   1. Identify design rainfall
   2. Identify runoff calculation method
   3. Identify detention discharge and storage calculation method
   4. Identify design storm recurrence intervals
   5. Discussion and justification of other criteria or calculation methods used that are not presented in or referenced by these *CRITERIA*
D. Hydraulic Criteria
   1. Identify various capacity references
   2. Discussion of other drainage facility design criteria used that are not presented in the *CRITERIA*
E. Waivers from CRITERIA
   1. Identify provisions by section number for which a waiver is requested
   2. Provide justification for each waiver requested

IV. Drainage Facility Design
A. General Concept
   1. Discussion of concept and typical drainage patterns
   2. Discussion of compliance with off-site runoff considerations
   3. Discussion of the content of tables, charts, figures, plates or drawings presented in the report
   4. Discussion of anticipated and proposed drainage patterns. Discuss how runoff is conveyed off-site to nearest adequate drainage facility. Discuss flow path and downstream capacity
B. Specific Details
   1. Discussion of drainage problems encountered and solutions at specific design points
   2. Discussion of detention storage and outlet design
   3. Discussion of storm water quality facilities
   4. Discussion of maintenance access and aspects of the design
   5. Discussion of easements and tracts for drainage purposes, including the conditions and limitations for use
C. Stormwater Storage Facilities
   1. Discuss detention pond designs, including release rates, storage volumes and water surface elevations for the EURV and emergency overflow conditions, outlet structure design, emergency spillway design, etc
   2. Discuss pond outfall locations and design, including method of energy dissipation
   3. Discuss how runoff is conveyed from all pond outfalls and emergency spillways to the nearest major drainageway, including a discussion of the flow path and capacity downstream of the outfall to the nearest major drainageway
   4. Discuss maintenance aspects of the design and easements and tracts that are required for stormwater storage purposes
D. Water Quality Enhancement BMPs
   1. Discuss the design of all structural water quality BMPs, including tributary areas, sizing, treatment volumes, design features, etc.
   2. Discuss how runoff is conveyed from all pond outfalls to the nearest adequate drainage facility, including a discussion of the flow path and capacity downstream
   3. Discuss the operation and maintenance aspects of the design and easements and tracts that are required for stormwater quality enhancement purposes
E. Additional Permitting Requirements

1. Section 404 of the Clean Water Act
2. The Endangered Species Act
3. Other local, state or federal requirements

V. Conclusions

A. Compliance with Standards

1. *CRITERIA*
2. Major Drainageway Planning Studies
3. *Manual*

B. Drainage Concept

1. Effectiveness of drainage design to control damage from storm runoff
2. Influence of proposed development on the Major Drainageway Planning Studies recommendation(s)

VI. References

Reference all criteria and technical information used.

VII. Appendices

A. Hydrologic Computations

1. Land use assumptions regarding adjacent properties
2. Initial and major storm runoff at specific design points
3. Historic and fully developed runoff computations at specific design points
4. Hydrographs at critical design points
5. Time of concentration and runoff coefficients for each basin

B. Hydraulic Computations

1. Open channel design
2. Detention area/volume capacity and outlet capacity calculations; depths of detention basins
3. Water Quality Capture Volume Calculations which may include grass swale and buffer calculations (Required for Phase III)
4. Downstream/outfall system capacity (including design storm) to major drainage system. Include a solution to mitigate downstream capacity problems from the development. See Section 3.3.3 for more information
5. Downstream/outfall system capacity for internal, adjoining and connecting major drainageways. Include a solution to mitigate downstream capacity problems from within and adjoining the development. See Section 3.3.3 for more information
6. Emergency spillway sizing calculations
7. Stabilization and grade control improvements and calculations for ditches and drainageways.
8. Energy dissipation at pipe outfalls
9. Culvert capacities (*Required for Phase III*)
10. Storm sewer capacity, including energy grade line (EGL) and hydraulic grade line (HGL) elevations (*Required for Phase III*)
11. Actual street capacity as calculated using the MHFD Spreadsheet. Compare with allowable depths listed in Chapter 10 (*Required for Phase III*)
12. Storm inlet capacity including inlet control rating at connection to storm sewer (*Required for Phase III*)
13. Check and/or channel drop design (*Required for Phase III*)

2.4.2 Phase II and Phase III Drawing Contents

A. Historic Drainage Conditions Plan: All drawings will be 24” x 36” or 22” x 34”in size. The plan should include the following:

1. A map in sufficient detail to identify drainage flows entering and leaving the development and general drainage patterns. The map should be at a scale of 1” = 1000’ to 1” = 4000’ and show the path of all drainage from the upper end of any off-site basins to the defined major drainageways (see Drainage Policy). The map will identify any major construction (i.e., development, irrigation ditches, existing detention facilities, culverts, storm sewers) along the entire path of drainage. Basins and divides are to be identified and topographic contours are to be included.

2. Boundary of the proposed development at a scale of 1” = 20’ to 1” = 100’

3. Existing floodplain limits for all major drainageways (see Section 3.2.3)

4. Existing contours at 2-foot maximum intervals. In mountain areas, a maximum interval of 5 feet may be used if approved by Planning and Zoning. The contours should extend a minimum of 100 feet beyond the property lines

5. Property lines and easements with purposes noted

6. Existing drainage facilities and structures, including irrigation ditches, street/roadside ditches, crosspans, drainageways, gutter flow directions and culverts. All pertinent information such as material, size, shape, slope and location should also be included

7. Overall historic drainage area boundary and drainage sub-area boundaries

8. Definition of flow path leaving the development through the downstream properties ending at a major drainageway or adequate drainage facility

9. Legend to define map symbols (*see Table 201 for symbol criteria*)

10. Title block in lower right hand corner

B. Developed Drainage Conditions Plan: Map(s) of the proposed development at a scale of 1" = 20' to 1" = 100' on a 24" x 36" or 22" x 34" drawing will be included. The plan will show the following:

1. Boundary of the proposed development at a scale of 1" = 20' to 1" = 100'.

2. Existing and proposed contours at 2-feet maximum intervals. In mountain areas, the maximum interval is 5 feet. The contours should extend a minimum of 100 feet beyond the property lines.

3. Property lines and easements with purposes noted.

4. Streets, indicating ROW width, flowline width, curb type, sidewalk and approximate slopes.

5. Existing drainage facilities and structures, including irrigation ditches, street/roadside ditches, crosspans, drainageways, gutter flow directions and culverts. All pertinent information such as material, size, shape, slope and location will also be included.

6. Overall drainage area boundary and drainage sub-area boundaries.

7. Proposed type of street flow (i.e., vertical or combination curb and gutter), street/roadside ditch, gutter, slope and flow directions and crosspans.

8. Proposed storm sewers and open drainageways, including inlets, manholes, culverts and other appurtenances, including riprap protection.

9. Proposed outfall point for runoff from the developed area and facilities to convey flows to the final outfall point without damage to downstream properties.

10. Proposed storm water quality facilities.

11. Routing and accumulation and flows at various critical points for the initial storm runoff listed on the drawing using the format shown in Table 201.

12. Routing and accumulation of flows at various critical points for the major storm runoff listed on the drawing using the format shown in Table 201.

13. Volumes and release rates for detention storage facilities and information on outlet works.

14. Location and elevations of all existing and proposed floodplains affecting the property.

15. Location and (if known) elevations of all existing and proposed utilities affected by or affecting the drainage design.

16. Routing of on-site and off-site drainage flow through the development.

17. Definition of flow path leaving the development through the downstream properties ending at a major drainageway or adequate drainage facility.

18. Legend to define map symbols (see Table 201 for symbol criteria).

19. Title block in lower right hand corner.

20. Detention Pond Summary as shown in Table 201.

2.5 Abridged Drainage Report

When an application is under the threshold to require stormwater detention, Planning and Zoning will accept an abridged drainage report in lieu of a Phase III Drainage Report. The Abridged Drainage Report shall include the following:

1. The standard engineer's and developer's certifications in Section 2.4.

2. Calculations demonstrating that the site meets the requirements in Section 3.3.6 and 3.3.7 to not require stormwater detention and water quality.

3. Narrative and supporting calculations (as needed) demonstrating that the project will be designed to carry surface and subsurface water to the nearest adequate street/roadside ditch, storm drain and/or natural watercourse.

4. Hydraulic and hydrologic calculations for any required and existing drainage structures to demonstrate that they meet the relevant provisions in these *CRITERIA*. If no drainage structures are proposed, information shall be included stating as such.

5. Calculations for any drainageways that impact the property and determination of the required easement width and location.

6. Any other Phase III Drainage Report requirements that impact the property as necessary.

2.6 Drainage Letter

When the application is under the threshold to require stormwater detention, and no stormwater features are proposed, Planning and Zoning will accept a Drainage Letter in the following format.

1. Narrative of the proposed land disturbance activity to include lot size, total impervious area and the proposed use.

2. Statement that all performance standards and applicable regulations are being met.

3. Letter signed and stamped by a Professional Engineer

2.7 Exception to the Requirement for a Drainage Report

Planning Engineering will accept a letter from the applicant stating that there will be no new construction in lieu of a drainage report if all of the following conditions are met:

1. No increase in impervious area and no new construction.

2. The existing facilities on the site were constructed legally.

3. There are no drainageways that impact the property.

2.8 Construction Plans

Where drainage improvements are to be constructed, the final construction plans (24" x 36" or 22" x 34") will be submitted with the Phase III Drainage Report. Approval of the final construction plans by Planning and Zoning is a condition of issuing the construction permits. Four (4) copies of the approved plans will be submitted to the County for file. The plans for the drainage improvements will include but are not limited to:

1. Storm sewers, inlets, outlets and manholes with pertinent elevations, dimensions, type and horizontal control indicated.

2. Culverts, end sections and inlet/outlet protection with dimensions, type, elevations and horizontal control indicated.

3. Channels, ditches and swales (including side/rear yard swales) with lengths, widths, cross-sections and erosion control (i.e. riprap, concrete, grout) indicated.

4. Checks, channel drops, erosion control facilities.

5. Detention pond grading, trickle channels, outlets, forebay, micropool, overflow weir and landscaping.

6. Water Quality/Detention pond cross-section including a 100-year water surface elevation, EURV elevations, micropool, forebay, outlet structure and 1-foot freeboard.

7. Stormwater quality facilities.

8. Other drainage related structures and facilities (including, alternative water quality BMP's, underdrains and sump pump lines).

9. Maintenance access considerations.

10. Overlot grading and erosion and sedimentation control plan (refer to the ZR, Land Disturbance).

11. The hydraulic grade line and energy grade line for all storm sewers will be shown on the profile sheets and calculation included in the Phase III Drainage Report.

The information required for the plans will be in accordance with sound engineering principles, these *CRITERIA* and the County requirements for subdivision designs. Construction documents will include geometric, dimensional, structural, foundation, bedding, hydraulic, landscaping and other details as needed to construct the storm drainage facility. The approved Phase III Drainage Plan will be included as part of the construction documents for all facilities affected by the drainage plan. Construction plans will be signed by a registered professional engineer as being in accordance with the County approved drainage report/drawings.

2.9 As-Built Drawings and Final Acceptance Certificate

As-built drawings for drainage facilities and grading will be submitted in accordance with the Development Agreements, Warranties and Guarantees Section of the *LDR*.

Table 201

Drawing Symbol Criteria and Hydrology

Review Table

A = Basin Designation
B = Area in Acres
C = Composite Runoff Coefficients

D = Design Point Designation

– – – – Basin Boundary

Summary Runoff Table

(To be placed on drainage plan)

Design Point	Contributing Area (Acres)	Runoff 5 year (CFS)	Peak 100 year (CFS)
XX	XX • XX	XX • X	XX • X

Detention Pond Summary

Pond Number	5-year Detention Volume	100 year Detention Volume	Water Quality Volume	Total Volume	5-Year Release Rate	100-year Release Rate	100-Year Water Elevation
1	X,XXX	X,XXX	X,XXX	X,XXX	X.X	X.X	XXX.X
2	X,XXX	X,XXX	X,XXX	X,XXX	X.X	X.X	XXX.X
3	X,XXX	X,XXX	X,XXX	X,XXX	X.X	X.X	XXX.X
4	X,XXX	X,XXX	X,XXX	X,XXX	X.X	X.X	XXX.X

Chapter 3 - Drainage Policy

3.1 Introduction

The provisions for adequate drainage are necessary to preserve and promote the general health, welfare and economic wellbeing of the County. Drainage is a regional feature that affects all governmental jurisdictions and all parcels of property. This characteristic of drainage makes it necessary to formulate a program that balances both public and private involvement. Overall coordination and master planning must be provided by the governmental units most directly involved, but drainage must be integrated at a regional level.

When planning drainage facilities, certain underlying principles provide direction for the effort. These principles are made operational through this set of policy statements. The application of the policy in turn is facilitated by technical criteria and data.

3.2 Basic Principles

3.2.1 Multi-Purpose Resource

The county encourages the use of stormwater runoff as a multi-purpose resource and to require space allocation for appropriate drainage facilities in the planning of new developments.

Stormwater runoff is a resource that is a subsystem of urbanization. This subsystem should be multi-purpose to satisfy the demands placed on water within urban development. The stormwater resource has the potential for a beneficial use if it is compatible with adjacent land uses and Colorado Water Law. Examples of beneficial use include groundwater infiltration and use in landscape features.

The planning of drainage facilities must be included in the development process. The provision for adequate drainage becomes a competing use for space along with other land uses. If adequate provision is not made in a land use plan for the drainage requirements, storm water runoff will conflict with other land uses and will result in water damages and will impair or even disrupt the functioning of other urban systems.

Drainage facilities can fulfill other purposes aside from just drainage. Facilities that are not typically designed for drainage, such as recreational areas and parking lots, can frequently be designed to provide water quantity and quality benefits.

Elimination or reduction in the size of detention and/or retention facilities is preferred where acceptable groundwater infiltration methods are used.

3.2.2 Water Rights

The county requires that analysis of impacts on water rights be included in the planning and design of proposed drainage facilities.

When the drainage sub-system interferes with existing water rights, the value and use of the water rights are affected. Drainageways and storage facilities frequently interrelate with water rights, which must be addressed when planning new facilities to preserve their integrity.

3.2.3 Major Drainageway

The county defines a major drainageway as any drainage flow path with a tributary area of 130 acres or more.

3.3 Regional and Local Planning

3.3.1 Post Development Flow Conditions

The county encourages infiltration and for post development flow conditions to be in a manner and quantity (flow rate) as to not do more harm than the predevelopment flow within the drainage basin, unless the owner/developer can obtain approval and/or easements from the affected property owner(s).

Colorado follows the modified civil law rule that the owner of upstream property possesses a natural easement on land downstream for drainage of surface water flowing in its natural course. Natural drainage conditions can be altered by the owner of the upstream land provided the water is not sent down in a manner or quantity to do more harm to the downstream land than formerly. During the development process, if water is allowed to flow into the development in its historic manner and quantity and is discharged in the historic manner and quantity, the alterations are generally acceptable. When the development alters the natural drainage into the development in a manner

or quantity that results in more harm to the downstream land, it may violate the modified civil law rule. Likewise, if the development does not return the drainage to the natural drainage conditions or does so in a manner or quantity that results in more harm, it may violate the modified civil law rule. Development proposals that violate the modified civil law rule will not be approved unless the owner/developer obtains approvals and/or easements from the affected property owner(s).

3.3.2 Master Planning

The county requires that new developments comply with adopted regional drainage master plans.

As set forth in Section 3.2.1, drainage planning is required for all new developments. In recognition that drainage boundaries are non-jurisdictional, the County participates in the preparation of regional basin-wide master plans. These plans define major drainage facilities, including those that are required public improvements for new developments.

3.3.3 Drainage Problem Areas

The county requires offsite analysis and drainage facilities for development in a drainage problem area. A drainage problem area is an area where there is no downstream outfall to a street, roadside ditch, open channel or storm sewer that meets the relevant requirements in these CRITERIA. The offsite analysis will address downstream conditions at every point along the project site boundaries where storm-water runoff will exit the property.

The county allows stormwater retention in drainage problem areas only if there is no other viable option, in the opinion of Planning and Zoning, available to resolve the drainage impact from the development. Stormwater retention facilities must be designed to meet these CRITERIA (storage).

There are areas within the County where significant drainage problems exist. Any new development in those areas may compound the existing drainage problems. Depending on specific details of the drainage problem, the following techniques for reducing or eliminating negative impacts have been used successfully:

- Over-detention with reduced release rates
- Downstream improvements to the drainage system
- Reduction of impervious area
- Infiltration water quality BMPs
- Stormwater retention

3.3.4 Public Improvements

The county requires the construction of improvements to the local drainage system and the major drainageway as defined by the approved Phase III Drainage Report and plan for all development.

Public improvements associated with drainage may include improvements to both the local drainage system and the major drainageway. The local drainage system consists of curb and gutter, inlets and storm sewers, culverts, bridges, swales, ditches, channels, detention/re-tention areas and other drainage facilities required to convey the minor and major storm runoff to the major drainageway. The major drainageway system consists of channels, storm sewers, bridges, detention/retention areas and other facilities serving more than the development or property in question, that may be impacted by the development.

3.3.5 Basin Transfer

The county does not allow the inter-basin transfer of storm drainage runoff and to maintain the historic drainage path within the drainage basin. The transfer of drainage from basin to basin is a viable alternative only in certain instances and will be reviewed on a case-by-case basis. When basin transfer is permitted, the plan must achieve historic flow conditions at the confluence of the basins and meet the requirements of post development flow conditions.

Colorado drainage law recognizes the inequity of transferring the burden on managing storm drainage from one location or property to another. Liability questions also arise when the historic drainage continuum is altered. The diversion of storm runoff from one basin to another should be avoided unless specific and prudent reasons justify and dictate such a transfer. Prior to selecting a solution, alternatives should be reviewed. Planning and design of stormwater drainage systems should not be based on the premise that problems can be transferred from one location to another.

3.3.6 Stormwater Runoff Detention

The county requires that stormwater detention and/or retention be provided for all developments except as described below. The required minimum volume and maximum release rates will be determined in accordance with the requirements of these CRITERIA. Detention/retention volumes may be reduced with the incorporation of impervious area reduction methods identified in the stormwater quality section. Regional detention and/or retention ponds may be used in satisfying storage requirements only if it can be demonstrated that the pond(s) has adequate storage capacity and that the pond(s) has been designed and constructed in accordance with the requirements of these CRITERIA.

When an application is under the threshold to require stormwater detention, Planning and Zoning will accept an Abridged Drainage Report or Drainage Letter in lieu of a Phase III Drainage Report. The thresholds are as follows:

1. For single family residential development with lot sizes less than 2.5 acres, cumulative impervious areas including the structures, streets/roads/driveways (paved or unpaved) and parking areas, will not total more than 10,000 square feet. The development proposal will restrict the allowable impervious area at the time of building permit issuance so that the maximum impervious area established is not exceeded.

2. For other residential development, with lot sizes greater than 2.5 acres, cumulative impervious areas including the structures, streets/roads/driveways (paved or unpaved) and parking areas, will not total more than 20,000 square feet. The development proposal should restrict the allowable impervious area at the time of building permit issuance so that the maximum impervious area established is not exceeded.

3. For residential lots adjacent to or abutting a drainageway, detention is not required if it can be proven to have no adverse effect to downstream property owners and have sufficient capacity to handle the additional flows. At a minimum, water quality shall be addressed in accordance with this regulation.

4. For all other development with lot sizes less than 2.5 acres, cumulative impervious areas including the structures, streets/roads/driveways (paved or unpaved) and parking areas, will not total more than 10,000 square feet. The development proposal will restrict the allowable impervious area at the time of building permit issuance so that the maximum impervious area established is not exceeded.

5. For existing Roadway projects where improvements are limited due to vacant land.

6. For all Trail projects.

If the proposal is meeting these thresholds, the applicant must submit an Abridged Drainage Report or Drainage Letter as identified in Sections 2.5 and 2.6 of these CRITERIA. The Abridged Drainage Report must address water quality as specified in the Stormwater Quality section below.

3.3.7 Stormwater Quality

The county requires BMPs to reduce stormwater quality pollution caused by development, unless it meets the criteria as noted in the procedure below. Regional water quality facilities may be used in satisfying the BMP requirements only if it can be demonstrated that the facility provides the required water quality capture volume and that the facility has been designed and constructed in accordance with the requirements of these CRITERIA.

Land development and human activities affect both the quantity and the quality of stormwater discharged to receiving waters. Development increases the volume of stormwater and the pollutants leaving the project property. To remove pollutants, the collection and conveyance infrastructure must be supplemented with collection and infiltration BMPs. The increase in impermeable areas such as rooftops, parking lots and paved areas decreases the opportunity for stormwater to infiltrate and percolate into the ground, and the absence of vegetation allows for increased flow velocity and sediment erosion.

To mitigate the negative effects of land development on stormwater quality, stormwater quality improvement BMPs are required. Refer to the *Manual* for BMPs and design specifications.

A project shall not be required to provide a Step 1 and/or Step 2 BMP per the Stormwater Quality Management Chapter of this CRITERIA if the following are met:

1. Detention and/or retention is not required per Section 3.3.6.

2. The project disturbs less than one acre of ground or 1 acre per mile for linear projects.

3. The project is not part of a larger common plan of development or sale.

A common plan of development or sale is a site where multiple separate and distinct construction activities may be taking place at different times on different schedules, but still under a single plan. Examples include:

1. Phased projects and projects with multiple filings or lots, even if the separate phases or filings/lots will be constructed under separate contracts or by separate owners (e.g., a development where lots are sold to separate builders).

2. A development plan that may be phased over multiple years but is still under a consistent plan for long-term development.

3. Projects in a contiguous area, up to 1/4 mile, that may be unrelated but still under the same contract, such as construction of a building extension and a new parking lot at the same facility.

Requests for relief of permanent water quality control measures for projects within the Jefferson County MS4 area will not be considered for projects that include land disturbance of one acre or greater except as listed below as an exclusion.

MS4 Exclusion Procedure:

Planning and Zoning may grant an administrative exclusion of the requirement for permanent water quality control measures associated with projects if one of the following apply:

(A) "Pavement Management Sites": Sites, or portions of sites, for the rehabilitation, maintenance, and reconstruction of roadway pavement, which includes roadway resurfacing, mill and overlay, white topping, black topping, curb and gutter replacement, concrete panel replacement, and pothole repair. The purpose of the site must be to provide additional years of service life and optimize service and safety. The site also must be limited to the repair and replacement of pavement in a manner that does not result in an increased impervious area and the infrastructure must not substantially change. The types of sites covered under this exclusion include day-to-day maintenance activities, rehabilitation, and reconstruction of pavement. "Roadways" include roads and bridges that are improved, designed or ordinarily used for vehicular travel and contiguous areas improved, designed or ordinarily used for pedestrian or bicycle traffic, drainage for the roadway, and/or parking along the roadway. Areas primarily used for parking or access to parking are not roadways.

(B) Excluded Roadway Redevelopment: Redevelopment sites for existing roadways, when one of the following criteria is met:

1) The site adds less than 1 acre of paved area per mile of roadway to an existing roadway, or

2) The site does not add more than 8.25 feet of paved width at any location to the existing roadway.

(C) Excluded Existing Roadway Areas: For redevelopment sites for existing roadways, only the area of the existing roadway is excluded from the requirements of an applicable development site when the site does not increase the width by two times or more, on average, of the original roadway area. The entire site is not excluded from being considered an applicable development site for this exclusion. The area of the site that is part of the added new roadway area is still an applicable development site.

(D) Aboveground and Underground Utilities: Activities for installation or maintenance of underground utilities or infrastructure that does not permanently alter the terrain, ground cover, or drainage patterns from those present prior to the construction activity. This exclusion includes, but is not limited to, activities to install, replace, or maintain utilities under roadways or other paved areas that return the surface to the same condition.

(E) Non-Residential and Non-Commercial Infiltration Conditions: This exclusion does not apply to residential or commercial sites for buildings. This exclusion applies to applicable development sites for which post-development surface conditions do not result in concentrated stormwater flow during the 80th percentile stormwater runoff event. In addition, post-development surface conditions must not be projected to result in a surface water discharge from the 80th percentile stormwater runoff events. Specifically, the 80th percentile event must be infiltrated and not discharged as concentrated flow. For this exclusion to apply, a study specific to the site, watershed and/or MS4 must be conducted. The study must show rainfall and soil conditions present within the permitted area; must include allowable slopes, surface conditions, and ratios of impervious area to pervious area; and the permittee must accept such study as applicable within its MS4 boundaries.

(F) Sites with Land Disturbance to Undeveloped Land that will Remain Undeveloped: Jefferson County may exclude sites with land disturbance to undeveloped land (land with no human-made structures such as buildings or pavement) that will remain undeveloped.

(G) Stream Stabilization Sites: Jefferson County may exclude stream stabilization sites.

(H) Trails: Jefferson County may exclude bike and pedestrian trails. Bike lanes for roadways are not included in this exclusion, unless attached to a roadway that qualifies under another exclusion in this section.

3.3.8 Floodplain Management

The county requires developments that impact floodplains to comply with the floodplain regulations of the ZR and LDR.

Although in many circumstances it may be desirable to leave the floodplain in its natural state, it is evident that development in areas encumbered by floodplains often results in alterations within the floodplain limits. The County has adopted floodplain regulations as part of its ZR and the *LDR*. These regulations should be referenced when alterations within floodplains are proposed.

3.3.9 Operations and Maintenance

The county requires that maintenance access be provided to all storm drainage facilities to assure continuous operational capability of the system. The property owner is responsible for the maintenance of all drainage facilities including inlets, pipes, culverts, channels, ditches, hydraulic structures and detention basins located on their land unless modified by the development improvements agreement. Should the owner fail to adequately maintain said facilities, the county will have the right to enter said land for the purposes of operations and maintenance. All such maintenance costs will be assessed to the property owner. Where floodplains or major drainageway improvements, are in whole or in part within the MHFD boundary, the approval by MHFD is required to assure MHFD maintenance eligibility.

An important part of all storm drainage facilities is the continued maintenance of the facilities to ensure they will function as designed. Maintenance responsibility lies with the owner of the land, except as modified by specific agreement. Maintenance responsibility will be delineated on Plats and Final Development Plans. Maintenance access for detention ponds must be adequate for maintenance and be shown on the Plats and Final Development Plans.

3.3.10 Drainage Easement Requirements

Drainage easements are required for all onsite drainage facilities and for offsite drainage facilities in accordance with Section 3.3.1. All drainage easements must be dedicated to Jefferson County in a form acceptable to the County Attorney's office and must be shown on plats and/or final development plans. The county has the right to access drainage easements, and the right, but not the obligation, of construction and/or maintenance within drainage easements. Drainage easements will be kept clear of obstructions by the property owner/homeowners association/owners association or equivalent entity to the flow and/or obstructions to maintenance access.

The easement requirements are indicated on the following table.

	Drainage Facility	Drainage Easement Width
1.	Storm Sewer/Subsurface Groundwater Collection System Mains /Interceptor	
	(a) Underdrains less than 36" dia.	20'
	(b) Underdrains equal to or greater than 36" dia.	Twice the pipe invert depth with sewer placed within the middle third of the easement (minimum width = 20')
2.	Open Channel/Swales	
	(a) Q_{100} less than 1 cfs	5' minimum
	(b) Q_{100} greater than or equal to 1 cfs and/or less than or equal to 20 cfs	15' minimum
	(c) Q100 greater than 20 cfs	15' minimum (must accommodate Q_{100} plus one foot of freeboard and required access)
3.	Detention/Retention/Water Quality Ponds/MPLDs/water quality features	As required to contain storage or encompass the water quality feature and associated facilities plus adequate maintenance access to the pond or feature and around perimeter.
4.	Along Side Lot Lines for Single-family Residential Subdivisions as required.	5' minimum, centered on the lot line.

3.3.11 Storage Facilities

The policy of the county is to:

1. Restrict development to areas outside of the reservoir's high-water line created by the design flood for the emergency spillway.

2. Restrict development to areas outside of the high-water line created by the breach of a dam (excepting existing Class 1 classified dams). If the development proposal is to improve the existing dam to a Class 1 classification, plans must be approved by the reservoir owner and dam safety branch of the Colorado Division of Water Resources. The improvements to the dam must be completed, inspected

and approved prior to any building permit within the boundary of the plat. All construction plans required to improve a dam to a class 1, as indicated above, is the responsibility of the developer

3. Require developments downstream of a Class 2 dam to have the dam safety branch of the Colorado Division of Water Resources determine if the proposed development is within the high-water line created by the breach of dam. For developments downstream of a Class 3 or Class 4 dam, a breach of dam study may be required to determine the limits of the breach of dam if the dam safety branch of the Colorado Division of Water Resources does not have the information available. The dam safety branch of the Colorado Division of Water Resources must approve the required study.

4. Restrict development to areas outside emergency spillway paths, beginning at the dam and proceeding to the point where the flood water returns to the natural drainage course.

The problem of dam safety and the related hazard of the emergency spillways has been brought to the attention of the public by nationwide dam failures, and is the subject of a National Dam Safety Program by the federal government. Jurisdictional dams are classified by the State Engineer as high, moderate, low or Class 1 to Class 4 structures depending on conditions downstream. Dams are classified as high hazard or Class 1 structures when, in the event of failure, there is a potential loss of life. Dams presently rated as low to moderate or Class 2 to Class 4 hazard structures may be changed to higher hazard rating if development occurs within the potential path of flooding due to a dam breach. In this case, the reservoir owners would be liable for the cost of upgrading the structure to meet the higher hazard classification.

3.3.12 Inadvertent Detention Storage

The county does not assume any reduction in peak flows for inadvertent stormwater storage created by embankments with undersized culverts when calculating downstream flows, unless such detention is covered by agreement with the county and is designed and constructed in accordance with these CRITERIA.

The county does not assume any reduction in peak flows for inadvertent stormwater storage due to privately owned non-flood-control reservoirs. For publicly owned water storage reservoirs, with the approval of the owner, only detention storage above the spillway crest can be used in the calculation of downstream flows.

3.3.13 Irrigation Facilities

The policies of the county are as follows:

1. To require development to direct storm runoff into historic and natural drainageways and avoid discharging into irrigation ditches, unless the discharge is approved by the ditch company or equivalent entity.

2. Whenever development will alter patterns of the storm drainage into irrigation ditches by increasing flow rates, volumes or changing points of concentration, the written consent from the ditch company or equivalent entity is required.

3. The discharge of runoff into the irrigation ditch will be approved only if such discharge is consistent with an adopted master drainage plan and is in the best interest of the county.

4. Whenever irrigation ditches cross major drainageways within the developing area, the developer is required to design and construct the appropriate structures to separate storm runoff from ditch flows subject to the condition noted in Policy 3 above.

5. Whenever physical modifications and/or relocation of irrigation ditches are proposed in conjunction with development, written consent from the ditch company or equivalent entity will be submitted. Relocated irrigation ditches will not be placed in public Rights-of-Way except for crossings of public Right-of-Way that are at right angles or as close to right angles as possible.

6. If storm water is carried within an irrigation ditch, a drainage easement will be dedicated to the county and will meet the easement width set forth in Section 3.3.10 of these CRITERIA. An irrigation ditch easement will be dedicated within the development boundary at the discretion of the ditch company or equivalent entity. The irrigation ditch easement agreement will address the relinquishment of any irrigation ditches that will be abandoned within the development boundary.

7. If an irrigation ditch is abandoned or terminated by the ditch company or equivalent entity, said ditch is deemed to be a natural drainageway. Modifications or alterations to the abandoned or terminated ditch are only allowed subject to approval by Jefferson County in accordance to these CRITERIA.

8. To assume that an irrigation ditch does not intercept the storm runoff from the upper basin and that the upper basin is tributary to the basin area downstream of the ditch. The physical aspects of a bermed irrigation ditch structure within a development will be analyzed to

determine any drainage impacts of new development.

There are many irrigation ditches and reservoirs in the county area. The ditches and reservoirs have historically intercepted the storm runoff from the rural and agricultural type basins, generally without major problems. With urbanization of the basins, however, the storm runoff has increased in rate, quantity and frequency, as well as changes in water quality. The irrigation facilities can no longer be utilized indiscriminately as drainage facilities and, therefore, policies have been established to achieve compatibility between urbanization and the irrigation facilities.

In evaluating the interaction of irrigation ditches with a major drainageway for the purpose of basin delineation, the ditch should not be utilized as a basin boundary due to the limiting flow capacity of the ditch. The ditches will generally be flowing full or near full during major storms; therefore, the tributary basin runoff would flow across the ditch.

Irrigation ditches are designed with flat slopes and limited carrying capacity, which decreases in the downstream direction. As a general rule, irrigation ditches cannot be used as an outfall point for the storm drainage system because of these physical limitations. In addition, certain ditches are abandoned after urbanization and could not be successfully utilized for storm drainage.

In certain instances, irrigation ditches have been successfully utilized as outfall points for the initial drainage system, but only after a thorough hydrological and hydraulic analysis. Since the owner's liability from ditch failure increases with the acceptance of storm runoff, the responsibility must be clearly defined before a combined system is approved.

3.4 Planning and Design

3.4.1 Minor and Major Drainage System

The county requires that all development include the planning, designing and implementation for both the minor and major drainage systems.

The county requires that all minor drainage systems be sized without accounting for peak flow reductions from on-site detention, unless otherwise approved by Planning and Zoning.

Every urban area has two separate and distinct drainage systems, whether or not they are actually planned or designed. One is the Minor Drainage System and the other is the Major Drainage System, which are combined to form the Total Drainage System.

The Major Drainage System is designed to convey runoff from the 100-year recurrence interval flood to minimize health and life hazards, damage to structures and interruption to traffic and services. Major storm flows can be carried in the urban street system (within acceptable depth criteria), channels, storm sewers and other facilities.

The Minor Drainage System is designed to transport the runoff from five-year frequency events with a minimum disruption to the urban environment. Minor storm drainage can be conveyed in the curb and gutter area of the street or street/roadside ditch (subject to street classification and capacity) by storm sewer, channel or other conveyance facility.

3.4.2 Storm Runoff

The county allows storm runoff to be determined by either the Rational method or the Colorado Urban Hydrograph Procedure (CUHP), within the limitations as set forth in these CRITERIA. For basins larger than 160 acres, the peak flows and volumes will be determined by CUHP.

3.4.3 Streets

The county allows the use of streets for drainage within certain limitations as defined in these CRITERIA.

Streets are an integral part of the urban drainage system and may be used for transporting storm runoff up to design limits. The engineer should recognize that the primary purpose of streets is for traffic, and therefore the use of streets for storm runoff must be restricted.

3.4.4 Floodproofing Existing Structures

The county encourages the floodproofing of existing structures not in conformance with the adopted floodplain regulations by utilizing the criteria presented in the "Homeowners Guide to Retrofitting, FEMA".

Floodproofing can be defined as those measures which reduce the potential for flood damages to existing properties within a floodplain. The floodproofing measures can range from elevating structures to intentional flooding of noncritical building spaces to minimize structural

damages. Floodproofing measures are only a small part of good floodplain management which encourages wise floodplain development to minimize the adverse effects of floods.

Chapter 4 - Floodplain Regulations

As set forth in the Floodplain Overlay District of the ZR and the *LDR*, the regulation of floodplains is necessary to preserve and promote the general health, welfare and economic well-being of the region.

Chapter 5 - Rainfall

5.1 Introduction

Presented in this section are the design rainfall data to be used with the CUHP and the Rational Method. All hydrological analysis within the jurisdiction of these *CRITERIA* will utilize the rainfall data presented herein for calculating storm runoff.

The design storms and time intensity frequency curves for the County were developed using the rainfall data and procedures presented in the *Manual* and are presented herein for convenience.

5.2 Jefferson County Rainfall Zones

5.2.1 Description of the Zones

A review of the isopluvial maps presented in the NOAA Atlas 14 for Colorado shows that Jefferson County can be divided into four rainfall zones. Within each zone, the precipitation values for various return periods and duration storms up to 0.4 inch within a small area of the County. These zones are delineated on Figure-501 and are discussed below:

Zone 1: Covers the area from the east Jefferson County line to the 6000-foot contour at the foothills boundary. The point rainfall values in this zone vary less than 0.4 inch for return periods from 2-year to 100-year and for storm durations from 1 hour to 6 hours.

Zone IIA: Covers the area from the 6000-foot contour to the 7500-foot contour and generally represents the foothills of the front range. The point rainfall values in this zone decrease from east to west by less than 0.3 inch for the storm durations and return periods noted.

Zone IIB: Covers the area from the 7500-foot contour to a line defined by the South Platte drainage basin tributary to the town of South Platte. The point rainfall values in this zone decrease from east to west by less than 0.4 inch.

Zone III: Covers the area tributary to the South Platte River at the town of South Platte and is bounded on the south and west by the County lines. The point rainfall values in this zone vary by less than 0.4 inch.

5.2.2 Selecting the Rainfall Zone

Since some of the drainage basins will include areas from more than one zone, the following criteria will be used to select the design rainfall and intensity date. Basin area refers to the actual basin or sub-basin for which storm runoff information is being calculated and not necessarily the entire watershed area.

a. If 50 percent or more of the basin area lies in a given zone, the data for that zone will be used.

b. For those basins within three rainfall zones, the zone data with the largest basin area will be used.

5.3 Colorado Urban Hydrograph Procedure Design Storms

For drainage basins less than five square miles, a two-hour storm distribution without area adjustment of the point rainfall values will be used for the CUHP. For drainage basins between five and ten square miles, a two-hour storm distribution is used but the incremental rainfall values are adjusted for the large basin area in accordance with suggested procedures in the NOAA Atlas 14 for Colorado. The adjustment is an attempt to relate the average of all point values for a given duration and frequency within a basin to the average depth over the basin for the same duration and frequency. For drainage basins between ten and twenty square miles, a three-hour storm duration with adjustment for area will be used. The distribution for the last hour was obtained by uniformly distributing the difference between the two and three-hour point rainfall values. The adjustment for area was obtained from the NOAA Atlas for Colorado. The incremental rainfall distributions for all basin areas up to 20 square miles are presented in Table 502A through Table 502D.

5.4 Time-Intensity-Frequency Curves

The Time-Intensity-Frequency curves for each zone were developed by distributing the one-hour point rainfall values (Table 501) using the factors obtained from the NOAA Atlas 14 presented below:

Factors for Durations of Less Than One Hour

Duration (minutes)	5	10	15	30
Ratio to one-hour depth	0.29	0.45	0.57	0.79

Source: NOAA Atlas 2, Volume III, Colorado 1973

The point values were then converted to intensities and plotted on Figure 502. The data are also presented in Table 503.

Table 501
Design Point Rainfall Values

One-Hour Point Rainfall (In.)					
County Zone	2-Year	5-Year	10-Year	50-Year	100-Year
Jefferson I	1.02	1.42	1.68	2.32	2.66
Jefferson IIA	0.95	1.33	1.57	2.17	2.48
Jefferson IIB	0.85	1.19	1.39	1.93	2.20
Jefferson III	0.73	1.06	1.26	1.79	2.06

Table 502A
CUHP Design Storm for Zone I - Incremental Rainfall Depth/Return Period

	Basins Less Than 5 Sq. Miles					Basins Between 5 and 10 Sq. Miles					Basins Between 10 and 20 Sq. Miles				
Time*	2-Yr**	5-Yr**	10-Yr**	50-Yr**	100-Yr**	2-Yr**	5-Yr**	10-Yr**	50-Yr**	100-Yr**	2-Yr**	5-Yr**	10-Yr**	50-Yr**	100-Yr**
5	0.02	0.03	0.03	0.03	0.03	0.02	0.03	0.03	0.03	0.03	0.02	0.03	0.03	0.03	0.03
10	0.04	0.05	0.06	0.08	0.08	0.04	0.05	0.06	0.08	0.08	0.04	0.05	0.06	0.08	0.08
15	0.09	0.12	0.14	0.12	0.12	0.09	0.12	0.14	0.12	0.12	0.09	0.12	0.14	0.12	0.12
20	0.16	0.22	0.25	0.19	0.21	0.16	0.21	0.24	0.19	0.21	0.15	0.20	0.23	0.19	0.21
25	0.26	0.36	0.42	0.35	0.37	0.24	0.35	0.40	0.34	0.36	0.23	0.32	0.38	0.32	0.33
30	0.14	0.18	0.20	0.58	0.67	0.14	0.17	0.19	0.56	0.64	0.13	0.16	0.18	0.52	0.60
35	0.06	0.08	0.09	0.28	0.37	0.06	0.08	0.09	0.24	0.36	0.06	0.08	0.09	0.25	0.33
40	0.05	0.06	0.07	0.19	0.21	0.05	0.06	0.07	0.19	0.21	0.05	0.06	0.07	0.19	0.21
45	0.03	0.05	0.06	0.12	0.16	0.03	0.05	0.06	0.12	0.16	0.03	0.05	0.06	0.12	0.16
50	0.03	0.05	0.05	0.12	0.13	0.03	0.05	0.05	0.12	0.13	0.03	0.05	0.05	0.12	0.13
55	0.03	0.04	0.05	0.07	0.11	0.03	0.04	0.05	0.07	0.11	0.03	0.04	0.05	0.07	0.11
60	0.03	0.04	0.05	0.07	0.11	0.03	0.04	0.05	0.07	0.11	0.03	0.04	0.05	0.07	0.11
65	0.03	0.04	0.05	0.07	0.11	0.03	0.04	0.05	0.07	0.11	0.03	0.04	0.05	0.07	0.11
70	0.02	0.04	0.05	0.06	0.05	0.02	0.04	0.05	0.06	0.05	0.02	0.04	0.05	0.06	0.05
75	0.02	0.03	0.05	0.06	0.05	0.02	0.03	0.05	0.06	0.05	0.02	0.03	0.05	0.06	0.05
80	0.02	0.03	0.04	0.04	0.03	0.02	0.03	0.04	0.04	0.03	0.02	0.03	0.04	0.04	0.03
85	0.02	0.03	0.03	0.04	0.03	0.02	0.03	0.03	0.04	0.03	0.02	0.03	0.03	0.04	0.03
90	0.02	0.03	0.03	0.03	0.03	0.02	0.03	0.03	0.03	0.03	0.02	0.03	0.03	0.03	0.03
95	0.02	0.03	0.03	0.03	0.03	0.02	0.03	0.03	0.03	0.03	0.02	0.03	0.03	0.03	0.03
100	0.02	0.02	0.03	0.03	0.03	0.02	0.02	0.03	0.03	0.03	0.02	0.02	0.03	0.03	0.03
105	0.02	0.02	0.03	0.03	0.03	0.02	0.02	0.03	0.03	0.03	0.02	0.02	0.03	0.03	0.03
110	0.02	0.02	0.03	0.03	0.03	0.02	0.02	0.03	0.03	0.03	0.02	0.02	0.03	0.03	0.03
115	0.01	0.02	0.03	0.03	0.03	0.01	0.02	0.03	0.03	0.03	0.02	0.02	0.03	0.03	0.03
120	0.01	0.02	0.02	0.03	0.03	0.01	0.02	0.02	0.03	0.03	0.01	0.02	0.02	0.03	0.03
125											0.01	0.02	0.02	0.03	0.03
130											0.01	0.02	0.02	0.03	0.03
135											0.01	0.02	0.02	0.03	0.03
140											0.01	0.02	0.02	0.02	0.03
145											0.01	0.01	0.02	0.02	0.03
150											0.01	0.01	0.01	0.02	0.02
155											0.01	0.01	0.01	0.02	0.02
160											0.01	0.01	0.01	0.02	0.02
165											0.01	0.01	0.01	0.01	0.02
170											0.01	0.01	0.01	0.01	0.01
175											0.01	0.01	0.01	0.01	0.01
180											0.01	0.01	0.01	0.01	0.01
Total	1.17	1.61	1.89	2.68	3.05	1.15	1.58	1.85	2.61	3.00	1.25	1.69	1.98	2.79	3.16

** Time in minutes*

*** Rainfall in inches*

Table 502B

CUHP Design Storm for Zone IIA - Incremental Rainfall Depth/Return Period

	Basins Less Than 5 Sq. Miles					Basins Between 5 and 10 Sq. Miles					Basins Between 10 and 20 Sq. Miles				
Time*	2-Yr**	5-Yr**	10-Yr**	50-Yr**	100-Yr**	2-Yr**	5-Yr**	10-Yr**	50-Yr**	100-Yr**	2-Yr**	5-Yr**	10-Yr**	50-Yr**	100-Yr**
5	0.02	0.03	0.03	0.03	0.02	0.02	0.03	0.03	0.03	0.02	0.02	0.03	0.03	0.03	0.02
10	0.04	0.05	0.06	0.08	0.07	0.04	0.05	0.06	0.08	0.07	0.04	0.05	0.06	0.08	0.07
15	0.08	0.12	0.13	0.11	0.11	0.08	0.12	0.13	0.11	0.11	0.08	0.12	0.13	0.11	0.11
20	0.15	0.20	0.24	0.17	0.20	0.14	0.20	0.23	0.17	0.20	0.14	0.18	0.21	0.17	0.20
25	0.24	0.33	0.39	0.33	0.35	0.23	0.32	0.38	0.31	0.33	0.22	0.30	0.35	0.29	0.32
30	0.13	0.17	0.19	0.54	0.62	0.12	0.17	0.18	0.52	0.60	0.12	0.15	0.17	0.49	0.56
35	0.06	0.08	0.09	0.26	0.35	0.06	0.08	0.09	0.25	0.33	0.06	0.08	0.09	0.23	0.31
40	0.05	0.06	0.07	0.17	0.20	0.05	0.06	0.07	0.17	0.20	0.05	0.06	0.07	0.17	0.20
45	0.03	0.05	0.06	0.11	0.15	0.03	0.05	0.06	0.11	0.15	0.03	0.05	0.06	0.11	0.15
50	0.03	0.05	0.05	0.11	0.12	0.03	0.05	0.05	0.11	0.12	0.03	0.05	0.05	0.11	0.12
55	0.03	0.04	0.05	0.07	0.10	0.03	0.04	0.05	0.07	0.10	0.03	0.04	0.05	0.07	0.10
60	0.03	0.04	0.05	0.07	0.10	0.03	0.04	0.05	0.07	0.10	0.03	0.04	0.05	0.07	0.10
65	0.03	0.04	0.05	0.07	0.10	0.03	0.04	0.05	0.07	0.10	0.02	0.04	0.05	0.07	0.10
70	0.02	0.04	0.05	0.05	0.05	0.02	0.04	0.05	0.05	0.05	0.02	0.04	0.05	0.05	0.05
75	0.02	0.03	0.05	0.05	0.05	0.02	0.03	0.05	0.05	0.05	0.02	0.03	0.05	0.05	0.05
80	0.02	0.03	0.04	0.04	0.03	0.02	0.03	0.04	0.04	0.03	0.02	0.03	0.04	0.04	0.03
85	0.02	0.03	0.03	0.04	0.03	0.02	0.03	0.03	0.04	0.03	0.02	0.03	0.03	0.04	0.03
90	0.02	0.03	0.03	0.03	0.03	0.02	0.03	0.03	0.03	0.03	0.02	0.03	0.03	0.03	0.03
95	0.02	0.03	0.03	0.03	0.03	0.02	0.03	0.03	0.03	0.03	0.02	0.03	0.03	0.03	0.03
100	0.02	0.02	0.03	0.03	0.03	0.02	0.02	0.03	0.03	0.03	0.02	0.02	0.03	0.03	0.03
105	0.02	0.02	0.03	0.03	0.03	0.02	0.02	0.03	0.03	0.03	0.02	0.02	0.03	0.03	0.03
110	0.02	0.02	0.03	0.03	0.03	0.02	0.02	0.03	0.03	0.03	0.02	0.02	0.03	0.03	0.03
115	0.01	0.02	0.03	0.03	0.03	0.01	0.02	0.03	0.03	0.03	0.02	0.02	0.03	0.03	0.03
120	0.01	0.02	0.02	0.03	0.03	0.01	0.02	0.02	0.03	0.03	0.01	0.02	0.02	0.03	0.03
125											0.01	0.02	0.02	0.02	0.02
130											0.01	0.01	0.02	0.02	0.02
135											0.01	0.01	0.01	0.02	0.02
140											0.01	0.01	0.01	0.02	0.02
145											0.01	0.01	0.01	0.02	0.02
150											0.01	0.01	0.01	0.02	0.02
155											0.01	0.01	0.01	0.01	0.02
160											0.01	0.01	0.01	0.01	0.02
165											0.00	0.01	0.01	0.01	0.01
170											0.00	0.01	0.01	0.01	0.01
175											0.00	0.00	0.01	0.01	0.01
180											0.00	0.01	0.00	0.01	0.01
Total	1.12	1.55	1.83	2.516	2.86	1.09	1.54	1.80	2.46	2.80	1.15	1.59	1.87	2.57	2.93

* *Time in minutes*

** Rainfall in inches

Table 502C

CUHP Design Storm for Zone IIB - Incremental Rainfall Depth/Return Period

	Basins Less Than 5 Sq. Miles					Basins Between 5 and 10 Sq. Miles					Basins Between 10 and 20 Sq. Miles				
Time*	2-Yr**	5-Yr**	10-Yr**	50-Yr**	100-Yr**	2-Yr**	5-Yr**	10-Yr**	50-Yr**	100-Yr**	2-Yr**	5-Yr**	10-Yr**	50-Yr**	100-Yr**
5	0.02	0.02	0.03	0.03	0.03	0.02	0.02	0.03	0.03	0.03	0.02	0.02	0.03	0.03	0.03
10	0.03	0.04	0.05	0.07	0.07	0.03	0.04	0.05	0.08	0.07	0.03	0.04	0.05	0.07	0.07
15	0.07	0.10	0.11	0.10	0.10	0.07	0.10	0.11	0.12	0.10	0.07	0.10	0.11	0.10	0.10
20	0.14	0.18	0.21	0.15	0.18	0.13	0.17	0.20	0.19	0.18	0.12	0.16	0.19	0.15	0.18
25	0.21	0.30	0.35	0.28	0.31	0.20	0.29	0.33	0.34	0.30	0.19	0.27	0.31	0.26	0.28
30	0.12	0.15	0.17	0.46	0.55	0.11	0.15	0.16	0.56	0.53	0.11	0.14	0.15	0.43	0.50
35	0.05	0.07	0.08	0.22	0.31	0.05	0.07	0.08	0.24	0.30	0.05	0.07	0.08	0.21	0.28
40	0.04	0.05	0.06	0.15	0.18	0.04	0.05	0.06	0.19	0.18	0.04	0.05	0.06	0.15	0.18
45	0.03	0.04	0.05	0.10	0.14	0.03	0.04	0.05	0.12	0.14	0.03	0.04	0.05	0.10	0.14
50	0.03	0.04	0.04	0.10	0.11	0.03	0.04	0.04	0.12	0.11	0.03	0.04	0.04	0.10	0.11
55	0.03	0.04	0.04	0.06	0.09	0.03	0.04	0.04	0.07	0.09	0.03	0.04	0.04	0.06	0.09
60	0.03	0.04	0.04	0.06	0.09	0.03	0.04	0.04	0.07	0.09	0.03	0.04	0.04	0.06	0.09

65	0.03	0.04	0.04	0.06	0.09	0.03	0.04	0.04	0.07	0.09	0.03	0.04	0.04	0.06	0.09
70	0.02	0.04	0.04	0.05	0.04	0.02	0.04	0.04	0.06	0.04	0.02	0.04	0.04	0.05	0.04
75	0.02	0.03	0.04	0.05	0.04	0.02	0.03	0.04	0.06	0.04	0.02	0.03	0.04	0.05	0.04
80	0.02	0.03	0.03	0.03	0.03	0.02	0.03	0.03	0.04	0.03	0.02	0.03	0.03	0.03	0.03
85	0.02	0.03	0.03	0.03	0.03	0.02	0.03	0.03	0.04	0.03	0.02	0.03	0.03	0.03	0.03
90	0.02	0.03	0.03	0.03	0.03	0.02	0.03	0.03	0.03	0.03	0.02	0.03	0.03	0.03	0.03
95	0.02	0.03	0.03	0.03	0.03	0.02	0.03	0.03	0.03	0.03	0.02	0.03	0.03	0.03	0.03
100	0.02	0.02	0.03	0.03	0.03	0.02	0.02	0.03	0.03	0.03	0.02	0.02	0.03	0.03	0.03
105	0.02	0.02	0.03	0.03	0.03	0.02	0.02	0.03	0.03	0.03	0.02	0.02	0.03	0.03	0.03
110	0.02	0.02	0.03	0.03	0.03	0.02	0.02	0.03	0.03	0.03	0.02	0.02	0.03	0.03	0.03
115	0.01	0.02	0.02	0.03	0.03	0.01	0.02	0.02	0.03	0.03	0.01	0.02	0.02	0.03	0.03
120	0.01	0.02	0.02	0.03	0.03	0.01	0.02	0.02	0.03	0.03	0.01	0.02	0.02	0.03	0.03
125											0.01	0.01	0.02	0.02	0.02
130											0.01	0.01	0.02	0.02	0.02
135											0.01	0.01	0.02	0.02	0.02
140											0.01	0.01	0.01	0.02	0.02
145											0.01	0.01	0.01	0.01	0.02
150											0.01	0.01	0.01	0.01	0.01
155											0.01	0.01	0.01	0.01	0.01
160											0.00	0.01	0.01	0.01	0.01
165											0.00	0.01	0.01	0.01	0.01
170											0.00	0.00	0.01	0.01	0.01
175											0.00	0.00	0.01	0.01	0.01
180											0.00	0.00	0.01	0.01	0.01
Total	1.03	1.40	1.60	2.21	2.60	1.00	1.38	1.56	2.61	2.56	1.05	1.43	1.67	2.31	2.66

* *Time in minutes*

** Rainfall in inches

Table 502D

CUHP Design Storm for Zone III - Incremental Rainfall Depth/Return Period

	Basins Less Than 5 Sq. Miles					Basins Between 5 and 10 Sq. Miles					Basins Between 10 and 20 Sq. Miles				
Time*	2-Yr**	5-Yr**	10-Yr**	50-Yr**	100-Yr**	2-Yr**	5-Yr**	10-Yr**	50-Yr**	100-Yr**	2-Yr**	5-Yr**	10-Yr**	50-Yr**	100-Yr**
5	0.01	0.02	0.03	0.02	0.02	0.01	0.02	0.03	0.02	0.02	0.01	0.02	0.03	0.02	0.02
10	0.03	0.04	0.05	0.06	0.06	0.03	0.04	0.05	0.06	0.06	0.03	0.04	0.05	0.06	0.06
15	0.06	0.09	0.10	0.19	0.09	0.06	0.09	0.10	0.09	0.09	0.06	0.09	0.10	0.09	0.09
20	0.12	0.16	0.19	0.14	0.16	0.11	0.16	0.18	0.14	0.16	0.11	0.14	0.17	0.14	0.16
25	0.18	0.27	0.32	0.27	0.29	0.18	0.26	0.31	0.26	0.28	0.16	0.24	0.29	0.24	0.26
30	0.10	0.14	0.15	0.45	0.52	0.10	0.13	0.14	0.43	0.50	0.09	0.13	0.14	0.41	0.47
35	0.05	0.06	0.07	0.21	0.29	0.05	0.06	0.07	0.20	0.28	0.05	0.06	0.07	0.19	0.26
40	0.04	0.05	0.05	0.14	0.16	0.04	0.05	0.05	0.14	0.16	0.04	0.05	0.05	0.14	0.16
45	0.02	0.04	0.05	0.09	0.13	0.02	0.04	0.05	0.09	0.13	0.02	0.04	0.05	0.09	0.13
50	0.02	0.04	0.04	0.09	0.10	0.02	0.04	0.04	0.09	0.10	0.02	0.04	0.04	0.09	0.10
55	0.02	0.03	0.04	0.06	0.08	0.02	0.03	0.04	0.06	0.08	0.02	0.03	0.04	0.06	0.08
60	0.02	0.03	0.04	0.06	0.08	0.02	0.03	0.04	0.06	0.08	0.02	0.03	0.04	0.06	0.08
65	0.02	0.03	0.04	0.06	0.08	0.02	0.03	0.04	0.06	0.08	0.02	0.03	0.04	0.06	0.08
70	0.01	0.03	0.04	0.04	0.04	0.01	0.03	0.04	0.04	0.04	0.01	0.03	0.04	0.04	0.04
75	0.01	0.03	0.04	0.04	0.04	0.01	0.03	0.04	0.04	0.04	0.01	0.03	0.04	0.04	0.04
80	0.01	0.02	0.03	0.03	0.02	0.01	0.02	0.03	0.03	0.02	0.01	0.02	0.03	0.03	0.02
85	0.01	0.02	0.02	0.03	0.02	0.01	0.02	0.02	0.03	0.02	0.01	0.02	0.02	0.03	0.02
90	0.01	0.02	0.02	0.03	0.02	0.01	0.02	0.02	0.03	0.02	0.01	0.02	0.02	0.03	0.02
95	0.01	0.02	0.02	0.03	0.02	0.01	0.02	0.02	0.03	0.02	0.01	0.02	0.02	0.03	0.02
100	0.01	0.02	0.02	0.03	0.02	0.01	0.02	0.02	0.03	0.02	0.01	0.02	0.02	0.03	0.02
105	0.01	0.02	0.02	0.03	0.02	0.01	0.02	0.02	0.03	0.02	0.01	0.02	0.02	0.03	0.02
110	0.01	0.02	0.02	0.03	0.02	0.01	0.02	0.02	0.03	0.02	0.01	0.02	0.02	0.03	0.02
115	0.01	0.02	0.02	0.03	0.02	0.01	0.02	0.02	0.03	0.02	0.01	0.02	0.02	0.03	0.02
120	0.01	0.01	0.02	0.03	0.02	0.01	0.01	0.02	0.03	0.02	0.01	0.01	0.02	0.03	0.02
125											0.01	0.01	0.01	0.01	0.02
130											0.01	0.01	0.01	0.01	0.01
135											0.01	0.01	0.01	0.01	0.01
140											0.01	0.01	0.01	0.01	0.01
145											0.01	0.01	0.01	0.01	0.01
150											0.01	0.01	0.01	0.01	0.01

155											0.01	0.01	0.01	0.01	0.01
160											0.01	0.01	0.01	0.01	0.01
165											0.01	0.01	0.01	0.01	0.01
170											0.00	0.00	0.01	0.01	0.01
175											0.00	0.00	0.00	0.01	0.01
180											0.00	0.00	0.00	0.00	0.01
Total	0.80	1.23	1.44	2.09	2.32	0.79	1.21	1.41	2.05	2.28	0.85	1.26	1.48	2.11	2.34

* *Time in minutes*

** Rainfall in inches

Table 503

Time-Intensity-Frequency Tabulation

Duration		5 Min		10 Min		15 Min		30 Min		60 Min	
Duration Factors		0.29		0.45		0.57		0.79		1.00	
County Zone	Frequency	Depth**	Intensity*	Depth**	Intensity*	Depth**	Intensity*	Depth**	Intensity*	Depth**	Intensity*
Jefferson I	2-Yr	0.30	3.55	0.46	2.75	0.58	2.33	0.81	1.61	1.02	1.02
	5-Yr	0.41	4.94	0.64	3.83	0.81	3.24	1.12	2.24	1.42	1.42
	10-Yr	0.49	5.85	0.76	4.54	0.96	3.83	1.33	2.65	1.68	1.68
	50-Yr	0.67	8.07	1.04	6.26	1.32	5.29	1.83	3.67	2.32	2.32
	100-Yr	0.77	9.26	1.20	7.18	1.52	6.06	2.10	4.20	2.66	2.66
Jefferson IIA	2-Yr	0.28	3.31	0.43	2.57	0.54	2.17	0.75	1.50	0.95	0.95
	5-Yr	0.39	4.63	0.60	3.59	0.76	3.03	1.05	2.10	1.33	1.33
	10-Yr	0.46	5.46	0.71	4.24	0.89	3.58	1.24	2.48	1.57	1.57
	50-Yr	0.63	7.55	0.98	5.86	1.24	4.95	1.71	3.43	2.17	2.17
	100-Yr	0.72	8.63	1.12	6.70	1.41	5.65	1.96	3.92	2.48	2.48
Jefferson IIB	2-Yr	0.25	2.96	0.38	2.30	0.48	1.94	0.67	1.34	0.85	0.85
	5-Yr	0.35	4.14	0.54	3.21	0.68	2.71	0.94	1.88	1.19	1.19
	10-Yr	0.40	4.84	0.63	3.75	0.79	3.17	1.10	2.20	1.39	1.39
	50-Yr	0.56	6.72	0.87	5.21	1.10	4.40	1.52	3.05	1.93	1.93
	100-Yr	0.64	7.66	0.99	5.94	1.25	5.02	1.74	3.48	2.20	2.20
Jefferson III	2-Yr	0.21	2.54	0.33	1.97	0.42	1.66	0.58	1.15	0.73	0.73
	5-Yr	0.31	3.69	0.48	2.86	0.60	2.42	0.84	1.67	1.06	1.06
	10-Yr	0.37	4.38	0.57	3.40	0.72	2.87	1.00	1.99	1.26	1.26
	50-Yr	0.52	6.23	0.81	4.83	1.02	4.08	1.41	2.83	1.79	1.79
	100-Yr	0.60	7.17	0.93	5.56	1.17	4.70	1.63	3.25	2.06	2.06

* *Depth in Inches*

** Intensity/hour

Figure 501
Rainfall Zones in Jefferson County

Rainfall Zone III extends to the southern boundary of Jefferson County.

Time-Intensity Frequency Curves

Figure 502A
Zone I

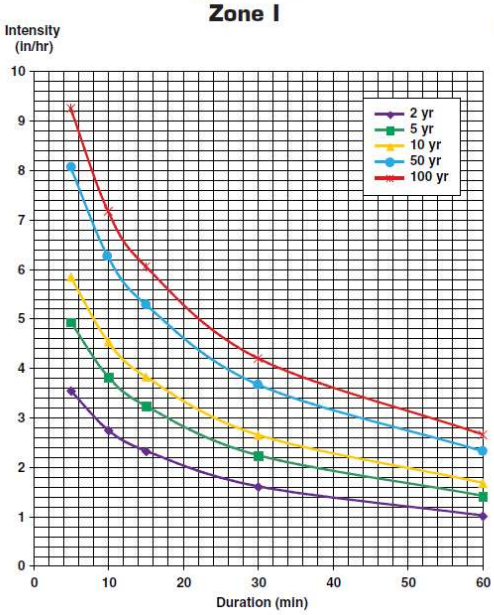

Figure 502B
Zone IIA

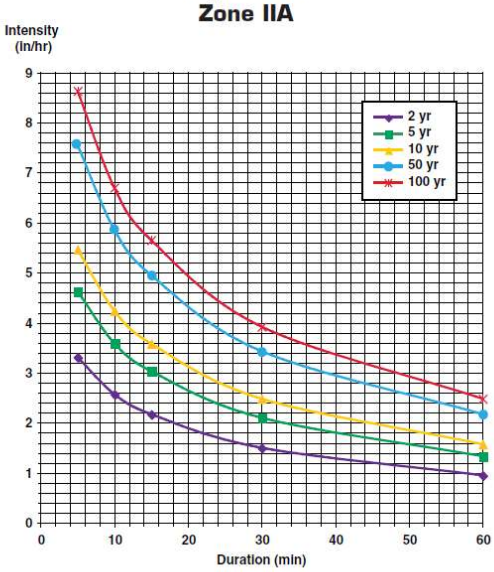

Figure 502C
Zone IIB

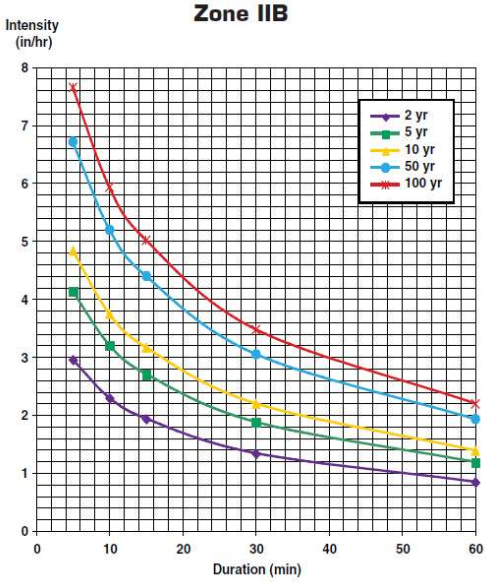

Figure 502D
Zone III

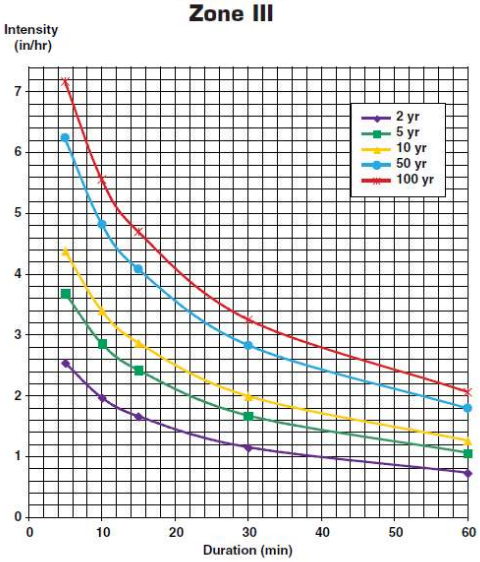

Chapter 6 - Runoff

6.1 Introduction

This chapter presents the criteria and methodology for determining the storm runoff design peaks and volumes to be used in the County in the preparation of storm drainage studies, plans and facility design. The details of the rainfall/runoff models are presented in the *Manual*. The specific input data requirements and modifications to the procedures are presented in this chapter.

6.2 Rational Method

The Rational Method, in widespread use in the Denver Region, will continue to be utilized for the sizing of storm sewers and for determining runoff magnitude from unsewered areas. The limit of application of the Rational Method is approximately 160 acres. It has been concluded that, for tributary basins in excess of 160 acres, the cost of the drainage works justifies significantly more study, thought and judgment on the part of the engineer than is permitted by the Rational Method. When the urban drainage basin exceeds 160 acres, the CUHP method represents better practice and must be used.

The procedures for the Rational Method, as explained in the *Manual*, Volume1, "Runoff", must be followed in the preparation of drainage reports and storm drainage facility designs in the County.

Standard forms and spreadsheets are available in the *MHFD Manual*. The most current versions of these software programs may be obtained through the District's web site (www.udfcd.org).

6.3 Colorado Urban Hydrograph Procedure

CUHP was originally developed for the Denver area at the time the *Manual* was prepared. The method may be used for basins as small as five acres. However, CUHP is required for watershed areas larger than 160 acres. The procedures for CUHP, as explained in the *Manual* will be followed in the preparation of drainage reports and storm drainage facility designs in the County. The design storms to be used with the CUHP method are presented in Tables 502A-D.

6.4 Storm Flow Analysis

When determining the design storm flows, the engineer should follow criteria and guidelines to assure that minimum design standards and uniformity of drainage solutions are maintained throughout the County. The information presented herein will be used by the engineer in the development of design storm runoff.

6.4.1 Onsite Flow Analysis

When analyzing the flood peaks and volumes, the engineer should use the proposed fully developed land use plan to determine runoff coefficients. In addition, the engineer should take into consideration the changes in flow patterns (from the undeveloped site conditions) caused by the proposed street alignments. When evaluating surface flow times, the proposed lot grading will be used to calculate the time of concentration or the CUHP parameters.

6.4.2 Offsite Flow Analysis

The analysis of offsite runoff is dependent on the development status and whether the tributary offsite area lies within a major drainageway basin as defined in Section 3.2.3. In all cases, the minor system is designed for the fully developed minor storm runoff (Section 3.4.1) without the benefits of onsite detention. In some cases, credit is given for detention for the design of the major system (Section 3.3.12).

6.4.2.1 Tributary Area Within a Major Drainageway Basin

(a) Where the offsite area is undeveloped, the runoff will be calculated assuming the basin is fully developed as defined by Planning and Zoning. If this information is not available, then the runoff will be calculated using the coefficients defined in the runoff chapter of the *Manual*. The most current versions of these software programs may be obtained through the District's web site (www.udfcd.org).

(b) Where the offsite area is fully or partially developed, the storm runoff will be based upon the existing platted land uses and topographic features. No credit will be given for onsite detention in the offsite area for any design frequency.

6.4.2.2 Tributary Area Not Within a Major Drainageway Basin

(a) Where the offsite area is undeveloped, the minor system runoff will be calculated assuming the basin is fully developed as defined by Planning and Zoning. If this information is not available, then the runoff will be calculated using the coefficients defined in the runoff chapter of the *Manual*. The most current versions of these software programs may be obtained through the District's web site (www.udfcd.org). The major system runoff (i.e., 10-year and 100-year) may be calculated assuming the historic runoff rates computed in accordance with procedures described in Chapter 14 of these *CRITERIA*.

(b) Where the offsite area is fully or partially developed, the storm runoff will be based on the existing platted land uses and topographic features, unless onsite detention in the offsite area has been constructed and accepted by the County. However, no credit will be given for onsite detention in the offsite area for the minor system design, unless otherwise approved by Planning and Zoning.

Chapter 7 - Open Channels

7.1 Introduction

This chapter addresses the technical criteria for the hydraulic evaluation and hydraulic design of open channels in the County. The information presented herein is considered to be a minimum standard. In many instances, special design or evaluation techniques will be required. Except as modified herein, all open channel criteria will be in accordance with the *Manual* and *Open Channel Hydraulics, Chow*, Ven T., McGraw-Hill, Inc., New York, New York, 1959

7.2 Channel Types

The channels in the County area are defined as natural or artificial. Natural channels include all water courses that have occurred naturally by the erosion process such as Clear Creek, Bear Creek, South Platte River, Ralston Creek, Dutch Creek, Van Bibber Creek, Big Dry Creek and Lena Gulch. Artificial channels are those constructed or developed by human effort.

7.2.1 Natural Channels

The hydraulic properties of natural channels vary along the channel reach and can be either controlled to the extent desired or altered to meet given requirements. The initial decision to be made regarding natural channels is whether or not the channel is to be protected from erosion due to high velocity flows or protected from excessive silt deposition due to low velocities.

Many natural channels in urbanized and to-be-urbanized areas have mild slopes, are reasonably stable and are not in a state of serious degradation or aggradation. However, if a natural channel is to be used for carrying storm runoff from an urbanized area, the altered nature of the runoff peaks and volumes from urban development will cause erosion. Detailed hydraulic analysis will be required for natural channels in order to identify the erosion tendencies. Some onsite modifications of the natural channel, such as grade control structures, may be required to assure a stabilized condition.

The investigations necessary to assure that the natural channels will be adequate are different for every waterway. The engineer must prepare cross sections of the channel, define the water surface profile for the minor and major design flood, investigate the bed and bank material to determine erosion tendencies and study the bank slope stability of the channel under future conditions of flow. Supercritical flow does not normally occur in natural channels, but calculations must be made to assure that the results do not reflect supercritical flow.

7.2.2 Grass Lined Channels

Grass lined channels are the most desirable of the artificial channels. The grass will stabilize the body of the channel, consolidate the soil mass of the bed, check the erosion on the channel surface and control the movement of soil particles along the channel bottom. The channel storage, the lower velocities and the greenbelt multiple-use benefits obtained create significant advantages over other artificial channels.

The presence of grass in channels creates turbulence which results in loss of energy and increased flow retardance. Therefore, the designer must give full consideration to sediment deposition and to scour, as well as hydraulics. Unless existing development within the County restricts the availability of ROW, only channels lined with grass will be considered acceptable for major drainageways.

For the purposes of these *CRITERIA*, sandy soils are defined as non-cohesive sands classified as SW, SP or SM in accordance with the Unified Soil Classification System.

7.2.3 Composite Channels

Composite channels are a type of grass-lined channel with a distinct low-flow channel that is vegetated with a mixture of wetland and riparian species. Design of composite channels will be in accordance with the *Manual*.

7.2.4 Bioengineered Channels

Bioengineered channels are a type of grass-lined channel that utilize vegetative components and other natural materials in combination with structural measures to construct natural-like channels that are stable and resistant to erosion. Design of bioengineered channels will be in accordance with the *Manual*.

7.2.5. Concrete Lined Channels

Concrete lined channels for major drainageways will be permitted only where ROW restrictions within existing development prohibit grass

lined channels or any other channel lining type. The lining must be designed to withstand the various forces and actions which tend to overtop the bank, deteriorate the lining, erode the soil beneath the lining and erode unlined areas, especially for the supercritical flow conditions.

If the project constraints suggest the use of a concrete channel for a major drainageway, the applicant will present the concept with justification to Planning and Zoning for consideration of a waiver from these *CRITERIA*.

A Design Report is required for approval of a concrete lined channel. The contents of such report will be determined by Planning and Zoning. On the as-built drawings, the engineer will be required to certify that the concrete used in the lining was tested and meets the accepted specifications.

7.2.6. Rock Lined Channels

Riprap lined channels are generally discouraged and will be permitted only in areas of existing development where ROW for major drainageways is limited and such limitation prohibits the use of grass lined channels. The advantage of rock lining a channel is that a steeper channel grade and steeper side slopes can be used. Rock linings (i.e., revetments) are permitted as a means of controlling erosion for natural channels. The disadvantages are the large initial cost of construction and the high maintenance costs due to vandalism.

If the project constraints suggest the use of riprap lining for a major drainageway, then the engineer must present the concept, with justification, to Planning and Zoning for consideration of a waiver from these *CRITERIA*. The design of rock-lined channels will be in accordance with the *Manual*.

7.3 Flow Computation

Uniform flow and critical flow computations will be in accordance with the *Manual*.

7.4 Design Standards for Major Drainageways

These standards cover the design of major drainageways as defined by the policy of Section 3.2.3. The design standards for open channels cannot be presented in a step-by-step fashion because of the wide range of design options available to the design engineer. Certain planning and conceptual design criteria are particularly useful in the preliminary design of a channel. These *CRITERIA*, which have the greatest effect on the performance and cost of the channel, are discussed below.

7.4.1 Natural Channels

The design criteria and evaluation techniques for natural channels are:

1. The channel and overbank areas will have adequate capacity for the 100-year storm runoff.

2. Natural channel segments shall be designed to have a calculated Froude number of 0.6 for non-cohesive soils or those with poor vegetation and a maximum of 0.8 for vegetated cohesive soils for the 100-year flood peak.

3. The water surface profiles will be defined so that the floodplain can be zoned and protected.

4. Filling of the Floodplain Overlay District reduces valuable channel storage capacity and tends to increase downstream runoff peaks.

5. Roughness factors (n), which are representative of unmaintained channel conditions, will be used for the analysis of water surface profiles.

6. Roughness factors (n), which are representative of maintained channel conditions, will be used to determine velocity limitations.

7. Structures may be required to control erosion for both the major and the minor storm runoff and should appear as natural features by imitating surrounding vegetation and natural materials. Where possible, locate structures at principal grade changes to minimize cost of retaining structures, reduce perceived scale and appearance of mass and bulk and use existing land forms of the site. All check drops, dams or structures should, whenever feasible, use natural materials to integrate with natural landscape characteristics.

8. Plan and profile drawings of the floodplain will be prepared. Appropriate allowances for known future bridges or culverts, which can raise the water surface profile and cause the floodplain to be extended, will be included in the analysis. The applicant will contact Planning and Zoning for information on future bridges and culverts.

9. Preserve, maintain or enhance natural waterway channel boundaries and alignment in their natural condition as landscape and visual amenities, focal points for development projects and to help define “edges” in and around communities. Preserve vegetation groups, rock outcroppings, terrain form, soil, waterways and bodies of water.

With most natural waterways, erosion control structures should be constructed at regular intervals to decrease the thalweg slope and to control erosion. However, these channels should be left in as near a natural condition as possible. For that reason, extensive modifications should not be undertaken unless they are found to be necessary to avoid excessive erosion with subsequent deposition downstream.

The usual rules of freeboard depth, curvature and other rules which are applicable to artificial channels, do not apply for natural channels. All structures constructed along the channel will be elevated a minimum of one foot above the 100-year water surface. There are significant advantages which may occur if the designer incorporates into his planning the overtopping of the channel and localized flooding of adjacent areas which are laid out and developed for the purpose of being inundated during the major runoff peak.

If a natural channel is to be utilized as a major drainageway for a development, then the applicant will meet with Planning and Zoning to discuss the concept and to obtain the requirements for planning and design documentation. Approval of the concept and design will be made in accordance with the requirements of Chapter 2 of these *CRITERIA*.

7.4.2 Grass Lined Channels

Key parameters in grass lined channel design include velocity, slopes, roughness coefficients, depth, freeboard, curvature, cross section shape and lining materials. Other factors such as water surface profile computation, erosion control, drop structures and transitions also play an important role. A discussion of these parameters is presented below.

1. Flow Velocity

The maximum normal depth velocity for the 100-year flood peak will not exceed 5.0 feet per second for grass lined channels. The Froude number (turbulence factor) will be less than 0.8 for grass lined channels. Grass lined channels having a Froude number greater than 0.8 are not permitted. The minimum velocity, wherever possible, will be greater than 2.0 feet per second for the minor storm runoff.

2. Longitudinal Channel Slopes

Grass lined channel slopes are dictated by velocity and Froude number requirements. Where the natural topography is steeper than desirable, drop structures will be utilized to maintain design velocities and Froude numbers.

3. Freeboard

Except where localized overflow in certain areas is desirable for additional ponding benefits or other reasons, the freeboard for the 100-year flow will be as follows:

$$HFB = 0.5 + \frac{V^2}{2g}$$

where

HFB = freeboard height (feet)

V = average channel velocity (fps)

g = acceleration of gravity = 32.2 ft/sec^2

The minimum freeboard will be 1.0 foot.

---

4. Curvature (Horizontal)

The center line curvature will have a radius twice the top width of the design flow but not less than 100 feet.

5. Roughness Coefficient

The variation of Manning's "n" with the retardance and the product of mean velocity and hydraulic radius, as presented in Figure 701, will be used in the capacity computation.

Retardance curve C will be used to determine the channel capacity, since a mature channel (i.e., substantial vegetation with minimal pervious maintenance) will have a higher Manning's "n" value. However, a recently constructed channel will have minimal vegetation and the retardance will be less than the mature channel. Therefore, retardance curve D will be used to determine the limiting velocity in a channel.

6. Cross Sections

The channel shape may be almost any type suitable to the location and to the environmental conditions. Often the shape can be chosen to suit open space and recreational needs. The limitations within which the design must fall for the major storm design flow include:

a. Trickle Channel

The base flow will be carried in a trickle channel except for sandy soils (see Section 7.2.2). The minimum capacity will be 1.0 percent to 3.0 percent of the 100-year flow but not less than 1 cfs. Trickle channels will be constructed of concrete or other approved materials to minimize erosion, to facilitate maintenance and to aesthetically blend with the adjacent vegetation and soils. Recommended trickle channel sections are presented on Figure 703. The minimum trickle channel width will be four feet.

An alternative trickle channel treatment is of greater capacity with natural bottom and appropriate riparian vegetation types and mix along edges to reduce erosion and create wetland area. Channel alignment should vary in character with a meandering quality. Drop structures should be included where necessary and appear as natural features.

b. Main Channel

A main channel is required for sandy soils. The side slopes must be 4:1 or flatter. The depth of the main channel is not included in the normal depth limitation. A main channel can also be used for non-sandy soils.

c. Bottom Width

The minimum bottom width will be consistent with the maximum depth and velocity criteria. The minimum bottom width will be four feet or the trickle channel width when trickle channel is required.

d. Easement/ROW Width

The minimum easement/ROW width will include freeboard and a 12-foot wide maintenance access road.

e. Flow Depth

The maximum design depth of flow (outside the trickle channel area and main channel area for sandy soils) for the 100-year flood peak will be limited to 5.0 feet in grass lined channels.

f. Maintenance Access Road

A maintenance access road will be provided along the entire length of all major drainageways with a minimum width of 12 feet. The County may require the road to be surfaced with six inches of Class 2 road base or concrete slab.

g. Side Slopes

Main channel side slopes will be 4 (horizontal) to 1 (vertical) or flatter.

7. Vegetation

The grass lining for channels will be in accordance with the *Manual*.

Vegetation and landform variations are encouraged to enhance the aesthetic quality within channels as long as the functional factors mentioned below are not compromised. It is recognized that channel capacity will be increased to accommodate an increase in plant

material types and densities and variation of landform. Overstory canopy trees are allowed outside of high hazard areas.

If extensive modification or disruption is necessary, rehabilitate channel corridor to conform to or improve upon predevelopment conditions. The stream form and vegetative character should appear as it would occur under long-term natural processes. Alternative techniques that can be used to achieve these include: varying the slope and edge of channel; the use of river rock for riprap; replanting appropriately sized riparian vegetation; and introducing meandering character on flat areas and pools and rocks in steeper areas. A concentration of plant materials should be included where drainages intersect arterial streets, when feasible, to maintain and enhance visual access from roadways.

The distance on each side of any flowing or intermittent stream channel should be large enough to ensure its use as an active and passive recreational and visual amenity.

8. Erosion Control

The requirements for erosion control for grass lined channels will be as defined in the *Manual*. The design of conduit outlet structures will be in accordance with the *Manual*.

9. Water Surface Profiles

Computation of the water surface profile will be presented for all open channels utilizing standard backwater methods, taking into consideration losses due to changes in velocity of channel cross section, drops, waterway openings or obstructions. The energy gradient will be shown on all drawings.

7.5 Design Standards for Small Drainageways

These standards cover the design of channels that are not classified as a major drainageway in accordance with the policy of Section 3.2.3. Additional flexibility and less stringent standards are allowed for small drainageways.

7.5.1 Natural Channels

The design criteria and evaluation techniques for natural channels are:

1. The channel and overbank areas will have adequate capacity for the 100-year storm runoff.

2. Natural channel segments shall be designed to have a calculated Froude number of 0.6 for non-cohesive soils or those with poor vegetation and a maximum of 0.8 for vegetated cohesive soils for the 100-year flood peak.

3. Roughness factors (n), which are representative of unmaintained channel conditions, will be used for the analysis of water surface profiles.

4. Roughness factors (n), which are representative of maintained channel conditions, will be used to determine velocity limitations.

5. Erosion control structures, such as check drops or check dams, may be required to control flow velocities, including the minor storm runoff.

6. Plan and profile drawings will be prepared showing the 100-year water surface profile, floodplain and details of erosion protection, if required.

7.5.2 Grass Lined Channels

Key parameters in grass lined channel design include velocity, slopes, roughness coefficients, depth, freeboard, curvature, cross section shape and lining materials. Other factors such as water surface profile computation, erosion control, drop structures and transitions also play an important role. A discussion of these parameters is presented below.

1. Flow Velocity

The maximum normal depth velocity for the 100-year flood peak will not exceed 7.0 feet per second for grass lined channels (see Section 7.2.2). The Froude number (turbulence factor) will be less than 0.8 for grass lined channels. Grass lined channels having a Froude number greater than 0.8 are not permitted. The minimum velocity, wherever possible, will be greater than 2.0 feet per second for the minor storm runoff.

2. Longitudinal Channel Slopes

Grass lined channel slopes are dictated by velocity and Froude number requirements. Where the natural topography is steeper than desirable, drop structures will be utilized to maintain design velocities and Froude numbers.

3. Freeboard

A minimum freeboard of 1 foot will be included in the design for the 100-year flow. For swales (i.e., small drainageways with a 100-year flow less than 20 cfs), the minimum freeboard requirements are 6 inches.

4. Curvature (Horizontal)

The centerline curvature will have a minimum radius twice the top width of the design flow but not less than 50 feet. The minimum radius for channels with a 100-year runoff of 20 cfs or less will be 25 feet.

5. Roughness Coefficient

The variation of Manning's "n" with the retardance (curve "C") and the product of mean velocity and hydraulic radius, as presented in Figure 701, will be used in the computation of capacity and velocity.

6. Cross Sections

The channel shape may be almost any type suitable to the location and to the environmental conditions. The section may also be simple V-Section for swales (i.e., Q100 less than 20 cfs). The limitations on the cross section are as follows:

a. Trickle Channel

The base flow (except for swales) will be carried in a trickle channel for non-sandy soils. The minimum capacity will be from 1.0 percent to 3.0 percent of the 100-year flow but not less than 1 cfs. The trickle channel can be constructed of concrete, rock, cobbles or other suitable materials. For sandy soils, a main channel is required in accordance with Section 7.4.2.6(b). Factors to be considered when establishing the need for trickle channels are: drainage slope, soil type and upstream impervious area. For 100-year runoff peaks of 20 cfs or less, trickle channel requirements will be evaluated for each case. Trickle channels help preserve swales crossing residential property.

b. Easement/ROW Width

The minimum easement/ROW width will include freeboard and should include a maintenance access.

c. Flow Depth

The maximum design depth of flow (outside the trickle channel area and main channel area for sandy soils) for the 100-year flood peak will be limited to 5 feet in grass lined channels.

d. Side Slopes

Main channel side slopes will be 4 (horizontal) to 1 (vertical) or flatter. Side slopes for channels with 100-year runoff peaks of 20 cfs or less will be 3 (horizontal) to 1 (vertical) or flatter.

7. Grass Lining

The grass lining for channels will be in accordance with the *Manual*.

8. Erosion Control

The requirements for erosion control for grass lined channels will be as defined in the *Manual*. The design of conduit outlet structures will be in accordance with the *Manual*.

9. Hydraulic Information

Calculations of the capacity, velocity and Froude numbers will be submitted with the construction drawings.

10. Design Example

Grass-lined channel for a watershed area under 130 acres in area.

100-year flow = 30 cfs

Slope = 2%

Side Slopes = 4:1

Find the minimum easement width and the required open channel cross-section.

Channel Cross Section

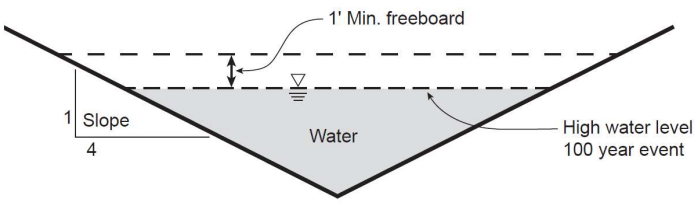

Step 1: (Determine Manning' n for both the (C) and (V) curves)

To determine the Manning's n, Figure 701 will be used. To find the V*R-value, an estimated value will have to be used to start the process. We will estimate that V*R is about 2, which would give us a Manning's n of .05. If this estimated number is not between the (V) and (C) curves, the calculations will need to be run with the Manning's n that is computed from the graph. Using the Manning's equation Q= 1.49/n (AR2/3S1/2), the following information is obtained:

Normal Depth = 1.49'

Velocity (V) = 3.38 feet/sec

Hydraulic Radius (R) = .722

V*R = 2.44

Manning's n (V) = .043

Manning's n (C) = .051

(From Figure 701)

Our estimate for the Manning's n was .050, which is in-between the actual (V) and (C) values; therefore, no further iterations are necessary.

Step 2: (Check limiting velocity and Froude Number with the Manning's n value from the (V) curve).

Using a Manning's n of .043, the following information is calculated from the Manning's equation:

Normal depth = 1.41'

Velocity = 3.79 ft/sec (under 5 ft/sec OK)

Hydraulic Radius (R) = .722

Flow cross-sectional area (A) = 7.92 ft^2

Top Width (T) = 11.26'

Hydraulic Depth (D) = A/T = .7033'

Calculate the Froude Number from the equation Fr = V/(G*D).5

V = average velocity (ft/sec)

G = acceleration of gravity = 32.2 ft/sec^2

D = Hydraulic Depth = A/T

The Froude number is calculated to be .796, which is under the maximum of .8.

Step 3: Use the channel capacity design curve (C curve to determine how wide the drainage easement has to be).

Using the Manning's equation with a Manning's n of .051 from the previously calculated C curve, the following were calculated:

Depth = 1.50'

Depth with required freeboard = 2.5'

Required width of channel = 20'

Minimum easement width for maintenance = must accommodate Q100 plus one foot of freeboard and required access

Setback from property line as defined in the ZR

The cross-section shown below would be acceptable:

Channel Cross Section Near Property Line

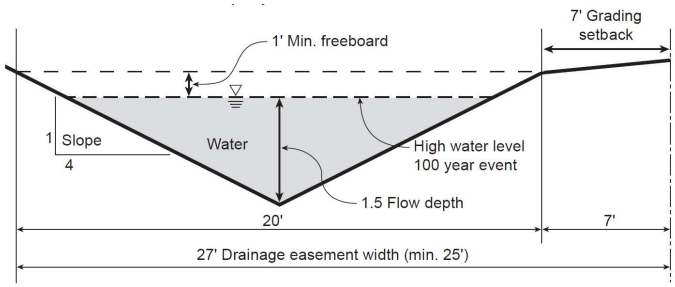

7.5.3 Concrete Lined Channels

The criteria for the design and construction of concrete lined channels is presented below:

1. Hydraulics

a. Freeboard

Adequate channel freeboard above the designed water surface will be provided and will not be less than that determined by the following:

$$HFB = 2.0 + 0.025\,V\,(d)^{1/3}$$

where

HFB = freeboard height (feet)
V = velocity (fps)
d = depth of flow (feet)

Freeboard will be in addition to superelevation, standing waves and/or other water surface disturbances. These special situations are to be addressed in a Design Report to be submitted with the construction drawings and specifications (Section 2.7).

Concrete side slopes will be extended to provide freeboard.

b. Superelevation

Superelevation of the water surface will be determined at all horizontal curves, and design of the channel section adjusted accordingly.

c. Velocities

Flow velocities will not exceed 18 fps during the 100-year flood.

2. Concrete Materials

A Design Report will be prepared as stated in Section 7.2.5. The minimum concrete material specifications are as follows:

a. Cement type: sulphate resistant.

b. All concrete will meet CDOT Class B specifications.

c. Maximum water-cement ratio: 0.50 (six gals. per sack).

d. Admixtures: All proposed admixtures will be discussed in the Design Report.

3. Concrete Lining Section

a. All concrete lining will have a sufficient thickness to withstand the structural and hydraulic loads.

b. The side slopes will be a maximum of 2 (vertical) to 1 (horizontal), or a structurally reinforced wall if steeper.

4. Concrete Joints

a. Expansion/contraction joints will be installed where new concrete lining is connected to a rigid structure or to existing concrete lining which is not continuously reinforced.

b. Longitudinal joints, where required, will be constructed on the sidewalls at least one foot vertically above channel invert.

c. All joints will be designed to prevent differential movement.

d. Construction joints are required for all cold joints and where the lining thickness changes.

5. Concrete Finish

The surface of the concrete lining will be provided with a wood float finish. Excessive working or wetting of the finish will be avoided.

6. Concrete Curing

All concrete will be cured by the application of a liquid membrane-forming curing compound (white pigmented) upon completion of the concrete finish.

7. Reinforcement steel (where used)

a. Steel reinforcement will be minimum grade-40 deformed bars. Wire mesh will not be used.

b. Ratio of longitudinal steel area to concrete cross sectional area will be greater than 0.005.

c. Ratio of transverse steel area to concrete cross sectional area will be greater than 0.0025.

d. Additional steel as needed if a retaining wall structure is used.

8. Earthwork

The following areas will be compacted to a least 95 percent of maximum density as determined by ASTM D-698 (Standard Effort):

a. The 12 inches of subgrade immediately beneath concrete lining (both channel bottom and side slopes).

b. Top 12 inches of maintenance road.

c. Top 12 inches of earth surface within 10 feet of concrete channel lip.

d. All fill material.

9. Bedding

Provide six inches of granular bedding equivalent in gradation to 3/4" concrete aggregate (*Standard Specifications for Road & Bridge Construction*, CDOT, Current printing, Section 703.02, No. 67) under channel bottom and side slopes.

10. Underdrain

Longitudinal underdrains will be provided on 10-foot centers and will daylight at the check drops. A check valve or flap gate will be provided at the outlet to prevent backflow into the drain. Weep holes will be provided in vertical wall sections of the channel.

11. Safety Requirements

a. A fence will be installed, as approved by Planning & Zoning, to prevent access wherever the 100-year channel flow depths exceed three feet.

7.5.4 Riprap Lined Channels

The criteria for the design and construction of riprap lined channels will be in accordance with the *Manual*.

Riprap lined channels will be designed for a turbulence factor (Froude number) less than 0.8 for the 100-year flood peaks. The riprap will be designed and constructed in accordance with Section 12.2, "Conduit Outlet Structures" of these *CRITERIA*. Freeboard requirements will be in accordance with the standards for grass lined channels defined in Section 7.4.2.3 of these *CRITERIA*.

7.6 Street/Roadside Ditches

The criteria for the design of street/roadside ditches is similar to the criteria for grass lined channels with modifications for the special purpose of minor storm drainage. The criteria is as follows (refer to Figure 702):

1. Capacity

Street/Roadside ditches will have adequate capacity for the minor storm runoff peaks. Capacity will be as defined in Table 701. Where the storm runoff exceeds the capacity of the ditch, a storm sewer system will be required.

2. Flow Velocity

The maximum velocity for the major storm flood peak will not exceed 5 feet per second

3. Curvature

The minimum radius of curvature will be 25 feet.

4. Roughness Coefficient

Manning's "n" values presented in Figure 701 will be used in the capacity computation for street/roadside ditches.

5. Grass Lining

The grass lining will be in accordance with the *Manual.* Alternative seed mixes may be required by Planning and Zoning as recommended by the JCD.

6. Cross Culvert Location

The surface drainage in a street/roadside ditch will not be carried in excess of 500 feet before being discharged into a natural drainageway. Grade changes of greater than 2% will require a cross culvert. The final location of culverts may be slightly altered by existing field conditions encountered during installation. Culverts will be installed at the slope of the natural terrain.

7. Major Drainage Capacity

The capacity of street/roadside ditches for major drainage flow is restricted by the maximum flow depth allowed at the street crown (Section 3.4.4). However, the flow spread should not extend outside the street ROW.

7.7 Channel Rundowns

A channel rundown is used to convey storm runoff from the bank of a channel to the invert of an open channel or drainageway. The purpose of the structure is to minimize channel bank erosion from concentrated overland flow. The design criteria for channel rundowns is as follows:

7.7.1 Cross-Sections

Typical cross-sections for channel rundowns are presented in Figure 704.

7.7.2 Design Flow

The channel rundown will be designed to carry a minimum of the minor storm runoff or 1 cfs, whichever is greater.

7.7.3 Flow Depth

The maximum depth at the design flow will be 12 inches. Due to the typical profile of a channel rundown beginning with a flat slope and then dropping steeply into the channel, the design depth of flow will be the computed critical depth for the design flow.

7.7.4 Outlet Configuration

The channel rundown outlet will enter the drainageway at the trickle channel flowline. Erosion protection of the opposite channel bank will be provided by a 24-inch layer of grouted Type-L riprap. The width of this riprap erosion protection will be at least three times the channel rundown width or pipe diameter. Riprap protection will extend up the opposite bank to the minor storm flow depth in the drainageway or 2 feet, whichever is greater.

Table 701

Street/Roadside Ditch Capacities

Ditch Slope	Ditch Type 1		Ditch Type 2		Ditch Type 3 *(Private Road Only)*	
	Capacity CFS	Velocity FPS	Capacity CFS	Velocity FPS	Capacity CFS	Velocity FPS
2%	26	4.2	36	4.16	1.9	0.95
2.50%	31	5	42	4.89	2.5	1.25
3.00%	32	5	40	5	3.2	1.6
3.50%	30	5	37	5	4	2
4.00%	28	5	33	5	4.8	2.4
5.00%	21	5	26	5	6	3.1
6.00%	17	5	22	5	8	4
7.00%	15	5	19	5	8	5
8.00%	13	5	16	5	7	5
10.00%	11	5	13	5	6	5
12.00%	9	5	11	5	5	5

... Permitted on all mountain roads and local and collector streets
... Only permitted on private and public roads in the mountains
... Only permitted on private roads in the mountains
... Only permitted on private roads where the natural terrain bears between south 60 east and south 45 west

Figure 701

Roughness Coefficients for Grassed Channels

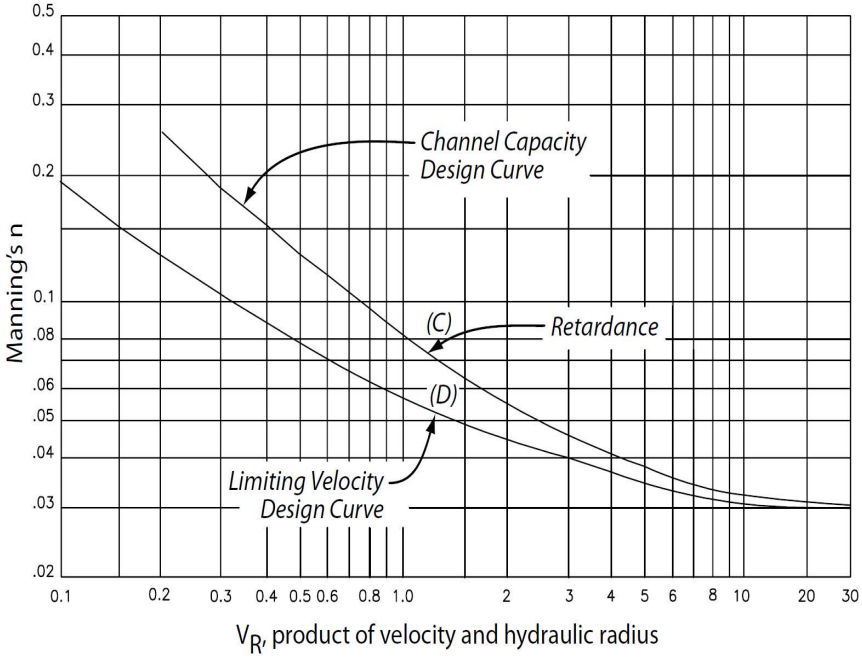

Reference: Handbook of Channel Design for Soil and Water Conservation, *U.S. Department of Agriculture, Soils Conservation Service, No. SCS-TP-61 March, 1947, Rev. June, 1954.*

Figure 702
Street / Roadside Ditch Sections

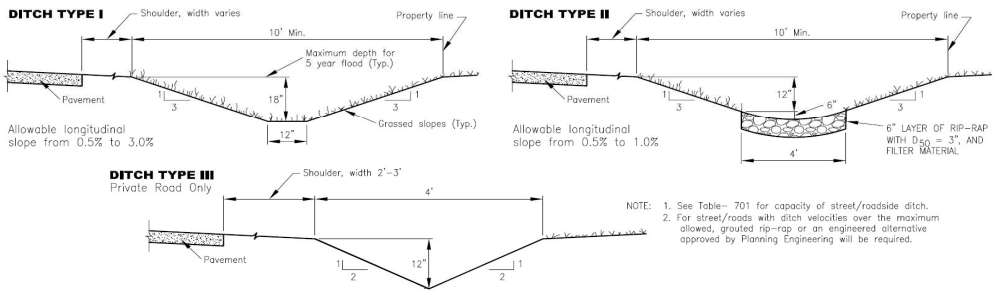

Figure 703
Trickle Channel Details

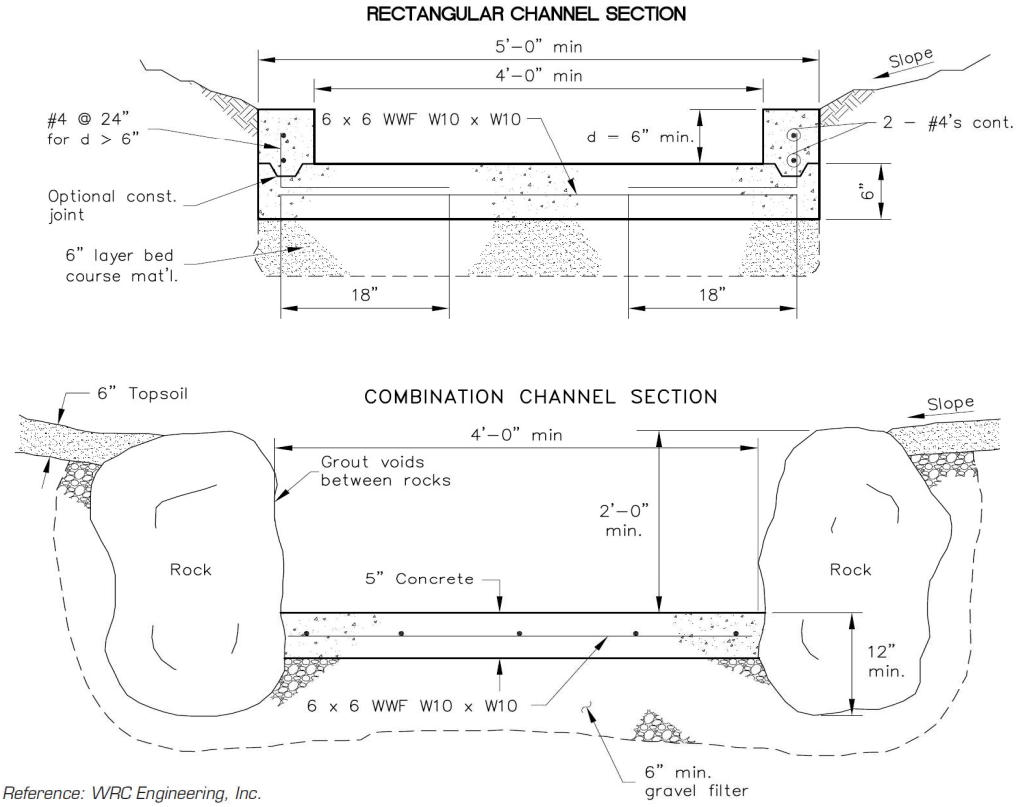

Reference: WRC Engineering, Inc.

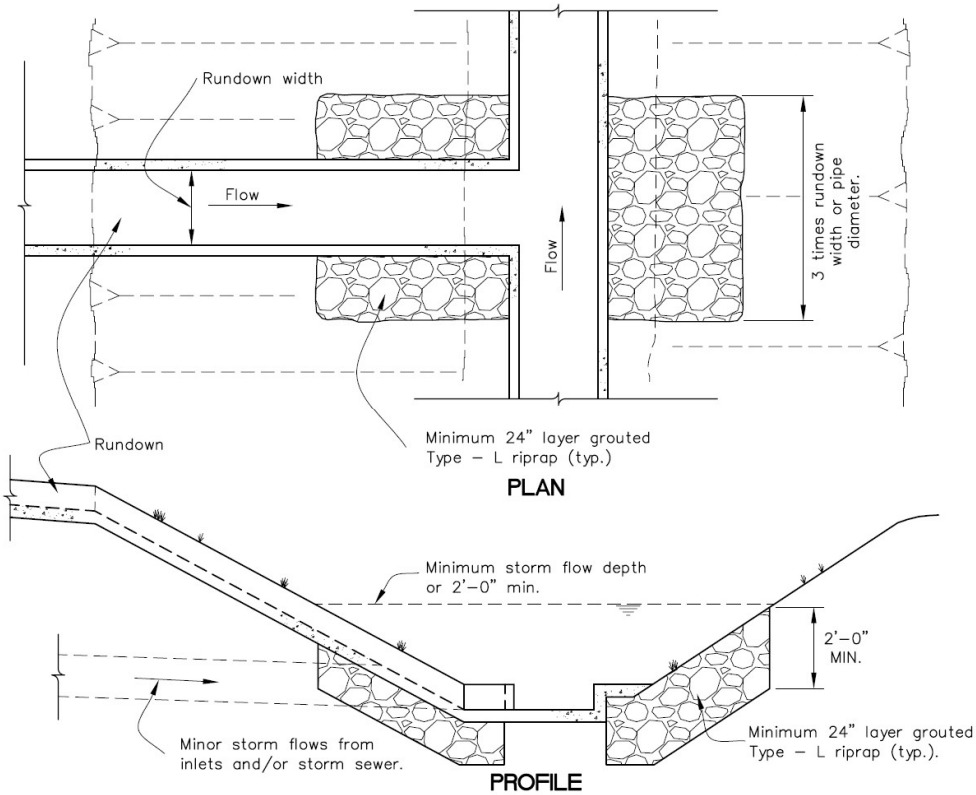
Rundown width
Flow
Flow
3 times rundown width or pipe diameter.
Rundown
Minimum 24" layer grouted Type – L riprap (typ.)
PLAN
Minimum storm flow depth or 2'–0" min.
2'–0" MIN.
Minor storm flows from inlets and/or storm sewer.
Minimum 24" layer grouted Type – L riprap (typ.).
PROFILE

Chapter 8 - Storm Sewers

8.1 Introduction

Storm sewers are a part of the Minor Drainage System, and are required when the other parts of the minor system, primarily curb, gutter and street/roadside ditches no longer have capacity for additional runoff.

Except as modified herein, the design of storm sewers will be in accordance with the "Streets, Inlets and Storm Drain" Chapter of the *Manual*. The user is referred to the *Manual* and other references cited for additional discussion and basic design concepts.

Stormwater Quality Considerations: The use of grass swales to promote infiltration is highly encouraged; since replacing storm sewer with grass swales is not always reasonable, storm sewer is still an integral part in many drainage system designs.

A number of Excel-based workbook tools are offered by UDFCD on their website (www.UDFCD.org).

8.2 Construction Materials

RCP, in accordance with ASTM C76-03, C506-02 or C507-02, and HP Pipe, in accordance with manufacturer specifications, are the only materials acceptable for use in storm sewer construction within County ROW. The minimum class of pipe will be Class II; however, the actual depth of cover, live load and field conditions may require structurally stronger pipe. CSP and HDPE pipe, in accordance with manufacturer's specifications, are only permitted in privately owned and maintained installations.

8.3 Hydraulic Design

Storm sewers will be designed to convey the minor storm flood peaks without surcharging the sewer. The design of the storm sewer must be checked to show that the hydraulic grade line is below the ground elevation during the major storm. To ensure that this objective is achieved the hydraulic and energy grade line calculated by accounting for pipe friction losses and pipe form losses. Total hydraulic losses will include friction, expansion, contraction, bend and junction losses. The methods for estimating these losses are presented in the following sections. The final energy grade line must be at or below the proposed ground surface if the major storm exceeds the allowable street capacity.

8.3.1 Pipe Friction Losses

The Manning's "n" values to be used in the calculation of storm sewer capacity and velocity are presented below:

Pipe Roughness Coefficients

Manning's n-value		
Sewer Type	Capacity Calculation	Velocity Calculation
RCP	0.015	0.011
CSP	0.026	0.021
HDPE/HP	0.012	0.010

8.3.2 Pipe Form Losses

Generally, between the inlet and outlet structures of the storm sewer system, the flow encounters a variety of configurations in the flow passageway such as changes in pipe size, branches, bends, junctions, expansions and contractions. These shape variations impose losses in addition to those resulting from pipe friction. Form losses are the result of fully developed turbulence and can be expressed as follows:

$$HL = K \frac{V^2}{2g}$$

where

HL = head loss (feet)

K = loss coefficient

V = average flow velocity (feet per second)

g = gravitational acceleration (32.2 ft/sec2)

The following is a discussion of a few of the common types of form losses encountered in sewer system design.

1. Bend Losses

The head losses for bends, in excess of that caused by an equivalent length of straight pipe, may be expressed by the relation

$$HL = Kb \frac{V^2}{2g}$$

in which Kb is the bend coefficient. The bend coefficient has been found to be a function of, (a) the ratio of the radius of curvature of the bend to the width of the conduit, (b) deflection angle of the conduit, (c) geometry of the cross section of flow, and (d) the Reynolds number and relative roughness. A table showing the recommended bend loss coefficient is presented below.

Energy Loss Coefficients - Bends

Case I-Conduit on 90 degree curves	
θ	K_b
90	0.25
60	0.20
45	0.18
30	0.14

Note 1: Head loss applied at P.C. for length
Note 2: Applies only to pipe 48" or greater

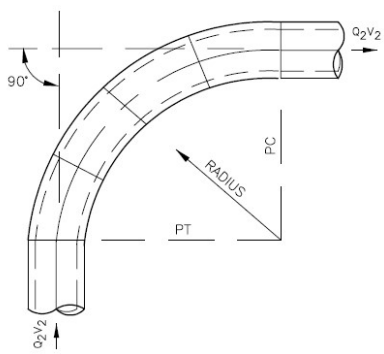

2. Junction and Manhole Losses

The loss coefficient Kb for bends at manholes is presented in Table 802. A junction occurs where one or more branch sewers enter a main sewer, usually at manholes. The hydraulic design of a junction is in effect the design of two or more transitions, one for each flow path. Allowances should be made for head loss due to the impact and junctions. The head loss for a straight through manhole or at an inlet entering the sewer is calculated from the following equation. The head loss at a junction can be calculated from:

$$HL = \frac{V2^2}{2g} - Kj \frac{V1^2}{2g}$$

where V2 is the outfall flow velocity and V1 is the inlet velocity. The loss coefficient, Kj, for various junctions is presented in Table 803.

8.3.3 Storm Sewer Outlets

When the storm sewer system discharges into the Major Drainageway System (usually an open channel), additional losses occur at the outlet in the form of expansion losses. For a headwall and no wingwalls, the loss coefficient Ke = 1.0 for a flared-end section the loss coefficient is approximately 0.5 or less.

8.3.4 Partially Full Pipe Flow

When a storm sewer is not flowing full, the sewer acts like an open channel, and the hydraulic properties can be calculated using open channel techniques (refer to Chapter 7). For convenience, charts for various pipe shapes have been developed for calculating the hydraulic properties (Figures 801, 802, 803). The data presented assumes that the friction coefficient, Manning's "n" value, does not vary throughout the depth.

8.4 Vertical Alignment

The sewer grade will be such that a minimum cover is maintained to withstand AASHTO HS-25 loading on the pipe. The minimum cover depends upon the pipe size, type and class and soil bedding condition, but will be not less than 1 foot at any point along the pipe.

The minimum clearance between storm sewer and water main, either above or below, will be 12 inches. Concrete encasement of the water line will be required for clearance of 12 inches or less.

The minimum clearance between storm sewer and sanitary sewer, either above or below, will also be 12 inches. In addition, when a sanitary sewer main lies above a storm sewer, or within 18 inches below, the sanitary sewer will have an impervious encasement or be constructed of structural sewer pipe for a minimum of 10 feet on each side of where the storm sewer crosses.

8.5 Horizontal Alignment

Storm sewer alignment may be curvilinear for pipe with diameters of 48 inches or greater but only when approved in writing by Planning & Zoning. The applicant must demonstrate the need for a curvilinear alignment. The limitations on the radius for pulled-joint pipe are dependent on the pipe length and diameter, and amount of opening permitted in the joint. The maximum allowable joint pull will be ¾ inches. The minimum parameters for radius type pipe are shown in Table 801. The radius requirements for pipe bends are dependent upon the manufacturer's specifications.

8.6 Pipe Size

The minimum allowable pipe size for storm sewers is dependent upon a practical diameter from the maintenance standpoint. The length of the sewer also affects the maintenance and, therefore, the minimum diameter. Table 801 presents the minimum pipe size for storm sewers.

8.7 Manholes

Manholes or maintenance access ports will be required whenever there is a change in size, direction, elevation, grade or where there is a junction of two or more sewers. A manhole may be required at the beginning and/or at the end of the curved section of storm sewer. The maximum spacing between manholes for various pipe sizes will be in accordance with Table 801. The required manhole size will be as follows:

Manhole Size

Sewer Diameter	Manhole Diameter
15" to 18"	4'
21" to 42"	5'
48" to 54"	6'
60" and larger	CDOT M-604-20, Page 2 of 3

Larger manhole diameters or a junction structure may be required when sewer alignments are not straight through or more than one sewer line goes through the manhole.

8.8 Checklist

To aid the designer and reviewer, the following checklist has been prepared:

1. Calculate energy grade line (EGL) and hydraulic grade line (HGL) for all sewers and show on the construction drawings or on a separate copy of the plans submitted with the construction drawings.

2. Account for all losses in the EGL calculation including outlet, form, bend, manhole and junction losses. Refer to Water Surface and Energy Grade Line Calculations for a Storm Sewer - Worksheet 801.

3. Provide adequate erosion protection at the outlet of all sewers into open channels.

4. Check for minimum pipe cover.

5. Check for adequate clearance with other utilities.

Table 801

Storm Sewer Alignment and Size Criteria

Minimum Pipe Diameter

Type	Minimum Pipe Diameter	Minimum Cross-sectional area
Main trunk	18 inch	1.77 sq. feet
Lateral from the inlet	15 inch	1.23 sq. feet

Note: Minimum size of the lateral will also be based upon a water surface inside the inlet at a minimum distance of 1 foot below the grate or throat.

Diameter of Pipe	Maximum Allowable Distance between Manholes and/or Cleanouts
15” to 36”	400 feet
42” and larger	500 feet

Minimum Radius for Radius Pipe

Diameter of Pipe	Minimum Radius of Curvature
48” to 54”	28.5 feet
57” to 72”	32.0 feet
78” to 108”	38.0 feet

Reference: Urban Storm Drainage Criteria Manual*, DRCOG, 1969*

Table 802

Energy Loss Coefficients - Bends at Manholes

Reference: Modern Sewer Design, *AISI, Washington D.C., 1980*

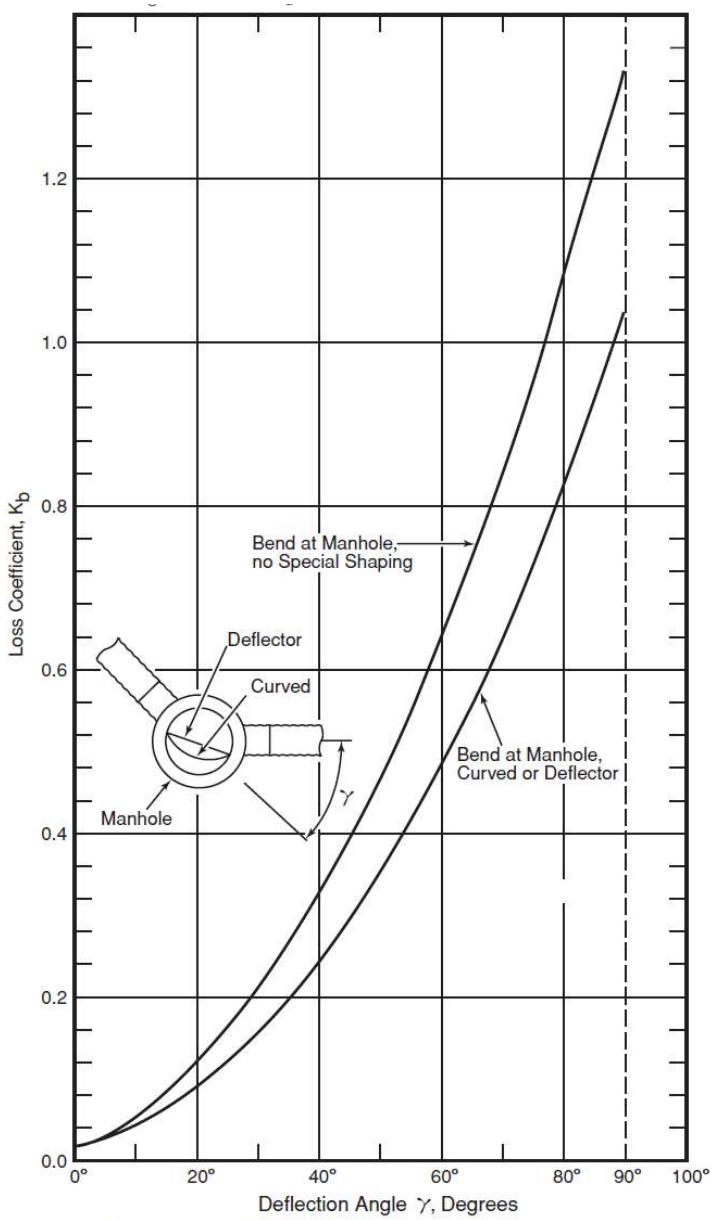

Note: Head loss applied at outlet of manhole.

Table 803
Manhole and Junction Losses
Reference: APWA Special Report No. 49, *1981*

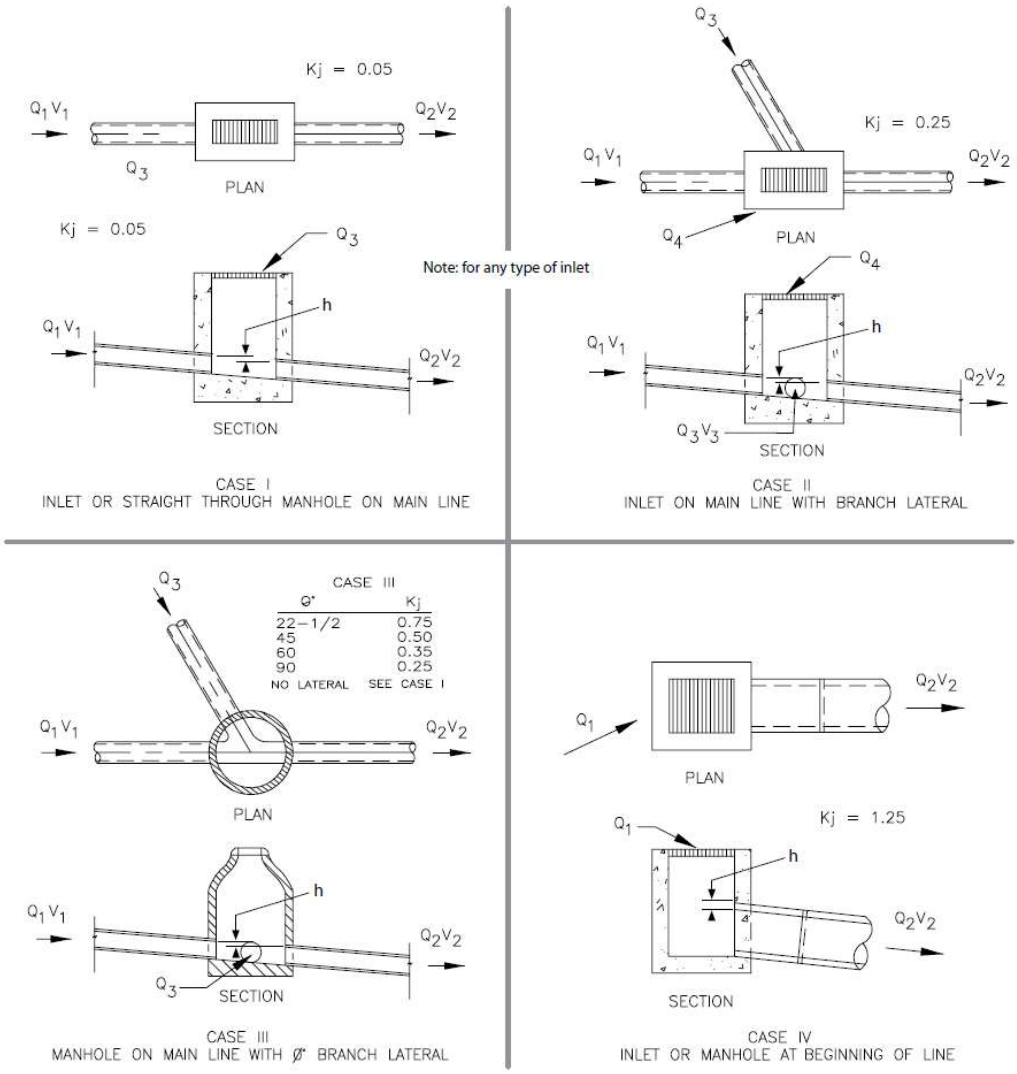

Figure - 801

Hydraulic Properties of Circular Pipe
Reference: Concrete Pipe Design Manual *ACPA, 1970*

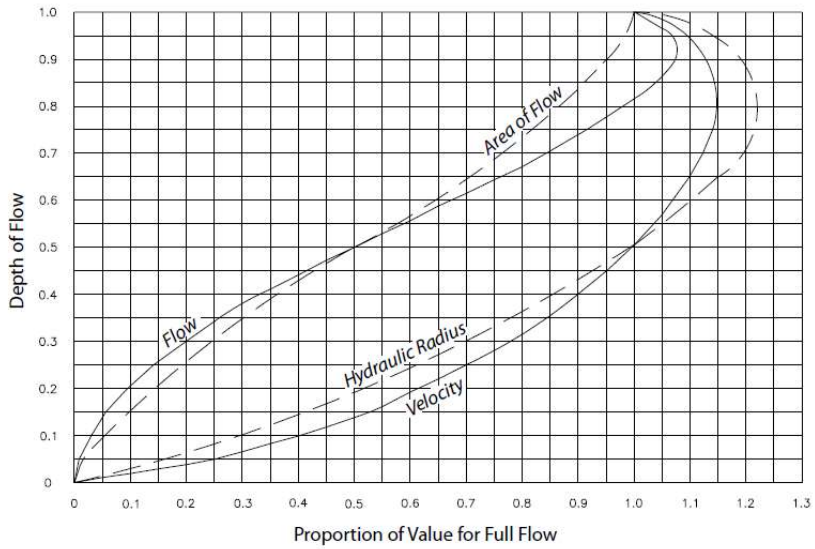

Figure 802
Hydraulic Properties Horizontal Elliptical Pipe
Reference: Concrete Pipe Design Manual *ACPA, 1970*

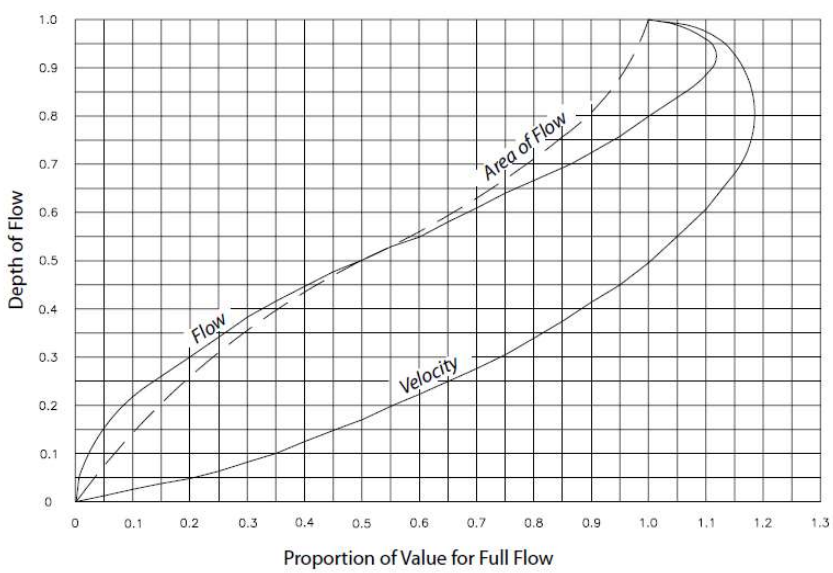

Figure 803

Hydraulic Properties of Arch Pipe

Reference: Concrete Pipe Design Manual *ACPA, 1970*

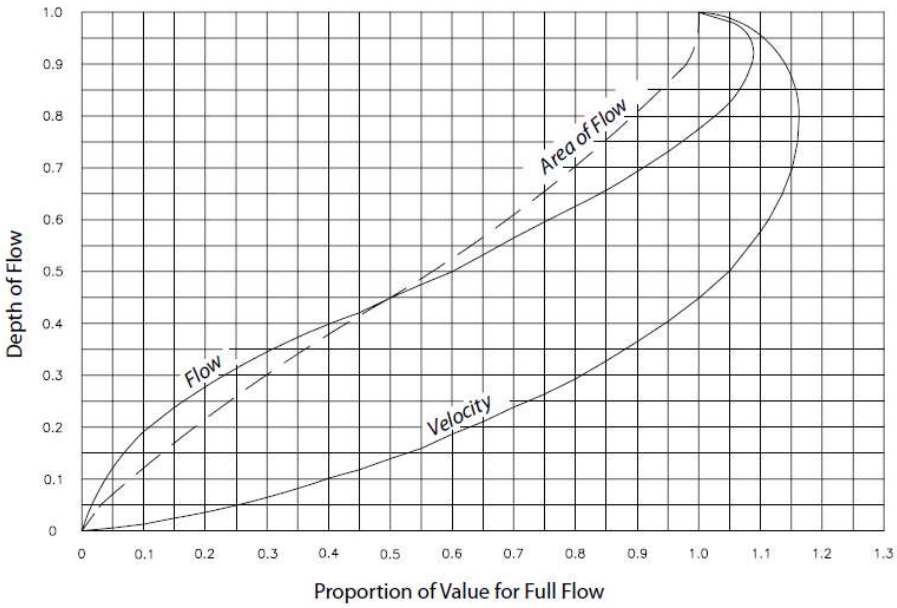

Worksheet 801

Water Surface and Energy Grade Line Calculations for a Storm Sewer

Pipe Material_____

Manning's n_____

Station	Invert	Pipe Dia.	W.S. Elev.	Pipe Shape	Area	¢	Velocity	Flow Rate	H_v	Energy Grade Line	S_f	Avg. S_f	Length	H_f	H_b	H_j	H_m	H_t	Total Loss
	(ft)	(in)	(ft)		(ft^2)		(fps)	(cfs)	(ft)	(ft)			(ft)	(ft)	(ft)	(ft)	(ft)	(ft)	(ft)

$¢ = (2g[n^2])$ $S_f = (¢H_v)$

2.21 $R^{1.33}$

Chapter 9 - Storm Sewer Inlets

9.1

There are four types of inlets: curb opening, grated, combination and slotted inlets. Inlets are further classified as being on a continuous grade or in a sump. The term "continuous grade" refers to an inlet so located that the grade of the street has a continuous slope past the inlet and, therefore, ponding does not occur at the inlet. The sump condition exists whenever water is restricted or ponds because the inlet is located at a low point. A sump condition can occur at a change in grade of the street from positive to negative, or at an intersection due to the crown slope of a cross street.

Presented in this chapter are the criteria and methodology for design and evaluation of storm sewer inlets in the County. Except as modified herein, all storm sewer inlet criteria will be in accordance with the *Manual*. A number of Excel-based workbook tools are offered by UDFCD on their website (www.UDFCD.org).

9.2 Standard Inlets

The standard inlets permitted for use in the County are:

Table 901
Standard Inlets

Inlet Type	Standard Detail	Permitted Use
Curb Opening Inlet Type R	Standard M-604-12 SD-1 (In *Criteria*)	All street types
Grated Inlet Type C	CDOT M-604-10	All streets/roads with a roadside or median ditch
Grated Inlet Type 13	CDOT M-604-13	Private drives, alleys or parking areas
Combination Inlet Type 13	SD-2 (In *Criteria*)	All street types
Slotted Inlet	Provide Manufacturer's Specifications	Private drives, alleys or parking areas
Median Inlet	SD-3 (In *Criteria*)	In medians

9.3 Inlet Hydraulics

The procedures and basic data used to define the capacities of the standard inlets under various flow conditions were obtained from the *Manual*, "Streets/Inlets/Storm Sewers". The procedure consists of defining the amount and depth of flow in the gutter, selecting the appropriate inlet type and determining the theoretical flow interception by the inlet. To account for effects which decrease the capacity of the various types of inlets, such as debris plugging, pavement overlaying and variations in design assumptions, the theoretical capacity calculated for the inlets is reduced to the allowed capacity by applying a clogging factor.

9.4 Inlet Spacing

The optimum spacing of storm inlets is dependent upon several factors including traffic requirements, contributing land use, street slope and distance to the nearest outfall system. The suggested sizing and spacing of the inlets is based upon the interception rate of 70% to 80%. This spacing has been found to be more efficient than a spacing using 100% interception rate. Using the suggested spacing only, the most downstream inlet in a development would be designed to intercept 100% of the flow. Also, considerable improvements in over-all inlet system efficiency can be achieved if the inlets are located in the sumps created by street intersections.

9.5 Inlet Capacity

The hydraulic capacity of an inlet is dependent on the type of inlet and the location (on a continuous grade or in a sump).

For the continuous grade condition, the capacity of the inlet is dependent upon many factors including gutter slope, depth of flow in the gutter, height and length of curb opening, street cross slope and the amount of depression at the inlet. In addition, all of the gutter flow will not be intercepted and some flow will continue past the inlet area (inlet carryover). The amount of carryover must be included in the drainage facility evaluation as well as in the design of the inlet (see Figure 901 for example).

The capacity of the inlet in a sump condition is dependent on the inlet geometry and the depth of ponding above the inlet.

1. Use the Urban Drainage workbook tool (most current versions) to calculate the selected inlet capacity.
2. Calculate design peak flow, including local peak flow and carryover flow, if applicable.
3. Determine street/gutter geometry:

(a) Allowable depth to gutter flowline, H

(b) Gutter width, W
(c) Gutter depression, a
(d) Street transverse slope, s_x
(e) Street longitudinal slope, s_o
(f) Manning's roughness, n (0.016)
(g) Maximum water spread, T
4. Determine inlet geometry:
(a) Inlet type
(b) Length of a single unit, L_O (5.00' for Type R, 3.27' for Type 13, 3.27' for combination)
(c) Width of a grate, W_O (n/a for Type R, 1.88' for Type 13,1.88' for combination)
(d) Height of curb opening, H (6" for Type R, n/a for Type 13, 6" for combination)
(e) Local depression, a_{local} (3" for Type R, 0" Type 13, 2" for combination)
(f) Angle of throat, theta (63.4^0 for Type R, n/a for Type 13, 90^0 for combination)
(g) Side width for depression pan, W_P (3.00' for Type R, n/a for Type 13, 2.00' for combination)
(h) Number of units, N_O
5. Determine inlet design coefficients, as applicable
(a) Clogging factor for a grate, C_0-G (0.5)
(b) Clogging factor for a curb opening, C_0-C (0.1)
(c) Clogging factor for a slotted inlet, C_0 (0.5)
(d) Area opening ratio for a grate, A (0.6)
(e) Grate orifice coefficient, C_d-G (0.67)
(f) Grate weir coefficient, C_w-G (3.00)
(g) Curb opening orifice coefficient, C_d-C (0.67)
(h) Curb opening weir coefficient, C_w-C (2.30)
(i) Slotted inlet orifice coefficient, C_d-S (0.80)
(j) Slotted inlet weir coefficient, C_w-S (2.48)

Figure 901
Inlet Design Example - Minor Storm

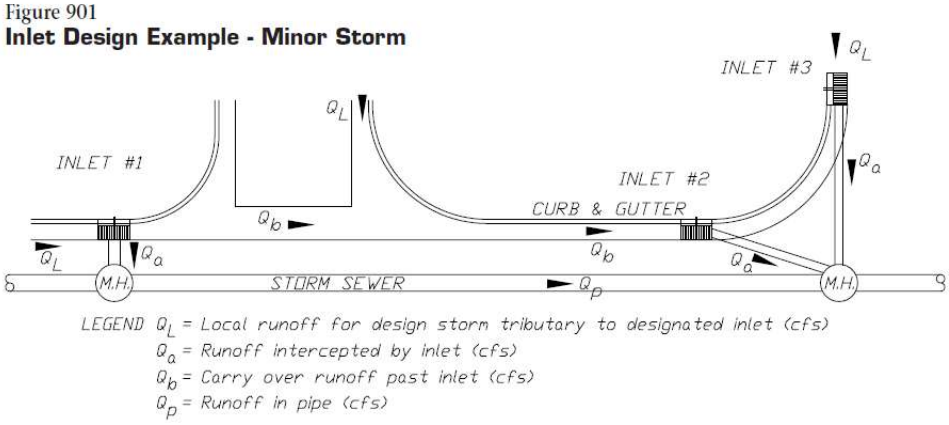

Chapter 10 – Streets/Roads

10.1 Introduction

The criteria presented in this chapter will be used in the evaluation of the allowable drainage encroachment within streets/roads. The review of all submittals will be based on the criteria herein and the Manual, "Street, Inlets and Storm Drain" chapter. A number of Excel-based workbook tools are offered by UDFCD on their website (www.UDFCD.org).

10.2 Function of Streets/Roads in the Drainage System

Streets and roads, specifically the curb and gutter or the street/roadside ditches, are part of the Minor Drainage System. When the drainage in the street/road exceeds allowable limits, a storm sewer system (Chapter 9) or an open channel (Chapter 7) is required to convey the excess flows. The streets/roads are also part of the Major Drainage System when they carry floods in excess of the minor storm also subject to certain limitations. However, the primary function of streets/roads is for traffic movement and, therefore, the drainage function is subservient and must not interfere with the traffic function of the street/road.

Design criteria for the collection and moving of runoff water on streets/roads is based on a reasonable frequency and magnitude of traffic interference. That is, depending on the character of the street/road, certain traffic lanes can be fully inundated once during the minor design storm return period. However, during lesser intense storms, runoff will also inundate traffic lanes but to a lesser degree. The primary function of the streets/roads for the Minor Drainage System is therefore to convey the nuisance flows quickly and efficiently to the storm sewer or open channel drainage without interference with traffic movement. For the Major Drainage System, the function of the streets/roads is to provide an emergency passageway for the flood flows with minimal damage.

10.3 The Allowable Use of Streets/Roads as a Drainage System

The streets in the County are classified as arterial/parkway, collector and local, according to the average daily traffic (ADT) for which the street is designed. The larger the ADT, the more restrictive the allowable drainage encroachment into the driving lanes. The limits of storm runoff encroachment for each classification is shown in the following tables:

Table 1001

Allowable Use of Streets/Roads for Minor Storm Runoff

Street/Road Classification	Maximum Allowable Street/Road Encroachment
Major Collector/Arterial/Parkway	No curb overtopping. Flow spread must leave at least two 10-foot lanes free of water, 10 feet each side of the street/road crown/median.
Collector	No curb overtopping. Flow spread must leave at least one 10-foot lane free of water, 5 feet either side of the street/road crown.
Local	No curb overtopping for 6-inch vertical curb. Flow may spread to the back of sidewalk for a combination curb, gutter and sidewalk.

Table 1002

Allowable Use of Streets/Roads for Major Storm Runoff

Street/Road Classification	Maximum Allowable Street/Road Encroachment
Major Collector/Arterial/Parkway	Flow may spread to the back of sidewalk or to the top of curb if there is no sidewalk. To allow for emergency vehicles, the depth of water will not exceed 6 inches at the street crown or 12 inches at the gutter flowline whichever is more restrictive.
Local/Collector	Flow may spread to the back of sidewalk or to the top of curb if there is no sidewalk. The depth of water at the gutter flowline will not exceed maximum allowable depth or 12 inches.

Table 1003

Allowable Flow Depths for Standard Street Templates

The allowable flow depths presented in this table are based on the maximum allowable encroachment in Tables 1001 and 1002 and the standard templates. Allowable flow depths must be calculated for any modifications to the standard templates.

Street Classification	Allowable Minor Storm Flow Depth	Allowable Major Storm Flow Depth
Principal Arterial or Parkway (94' Flowline to Flowline with raised median)	6"	9.4"
Principal Arterial or Parkway (94' Flowline to Flowline without raised median)	6"	9.4"
Minor Arterial (70' Flowline to Flowline with raised median)	5.4"	9.4"
Minor Arterial (70' Flowline to Flowline without raised median)	6"	9.4"

Major Collector (49 feet flowline to flowline with raised median)	6"	9.4"
Major Collector (49' feet flowline to flowline without raised median)	6"	9.4"
Collector (with detached sidewalk)	4.7"	8.4"
Collector (with attached sidewalk)	4.7"	7.1"
Local (34' Flowline to Flowline, 6" vertical curb and detached sidewalk)	6"	8.4"
Local (34' Flowline to Flowline, combination curb, gutter, sidewalk)	5"	5"
Local (28' Flowline to Flowline, vertical curb and detached sidewalk)	6"	8.4"
Local (28' Flowline to Flowline, combination curb, gutter, sidewalk)	5"	5"

Table 1004

Allowable Cross Street Flow

Street/Road Classification	Minor Drainage System Maximum Depth	Major Drainage System Maximum Depth
Major Collector/Arterial/Parkway	None	None
Collector	None	12" depth at gutter flowline or edge of pavement if no gutter
Local	6" depth in *cross pan or gutter flowline	12" depth at gutter flowline or edge of pavement if no gutter

**Cross-pans are prohibited on arterial streets/roads. Cross-pans are allowed on collector and local streets/roads only at locations where traffic stops are intended at intersections and no storm sewer is present.*

Table 1005

Allowable Culvert Overtopping

Street/Road Classification	Minor Drainage System Maximum Depth	Major Drainage System Maximum Depth*
Major Collector/Arterial/Parkway	None	None. Minimum clearance between the low chord or culvert crown and the energy grade line is 6 inches for basins less than 2 square miles, 1 foot for basins up to 10 square miles and 2 feet for basins greater than 10 square miles.
Collector/Local/Driveway	None	12" depth at gutter flowline or edge of pavement if no gutter. The maximum headwater depth is 1.5 times the culvert height.
Local Mountains/ Driveway Mountains	None	Overtopping depth for the 100-year storm event is 12" unless approved by Planning and Zoning ~~and the Fire Protection District.~~

**The regulations set forth in the ZR, also apply for culvert crossings that are within the Floodplain Overlay District.*

Formatted Table

10.4 Hydraulic Evaluation

10.4.1. Allowable Gutter Capacity

The allowable gutter capacity is calculated using the modified Manning's formula. This equation is the basis of the UD-Inlet spreadsheet.

$Q = R(0.56)(Z/n)S^{1/2} d^{8/3})$

Where

Q = discharge in cfs

$Z = 1/S_x$, where S_x is the street transverse slope(ft/ft)

d = depth of water at face of curb (feet)

S_o = street longitudinal slope(ft/ft)

n = Manning's roughness coefficient

R = reduction factor (*Manual*, Figure ST-2)

A Manning's n-value of 0.016 will be used for the calculations at all street slopes. The allowable gutter capacity is computed by multiplying the theoretical street capacity by the appropriate reduction factor. The purpose of the reduction factor is for public safety.

The allowable gutter capacity will need to be reduced for non-symmetrical street sections. Street capacity calculations will be submitted to the County at critical locations of the non-symmetrical streets.

10.4.2 Street/Road with Roadside Ditches

Some streets/roads are characterized by street/roadside ditches rather than curbs and gutters. The capacity is limited by the depth in the ditch and the maximum flow velocity. Refer to Section 7.6 for the design and capacity of street/roadside ditches.

Chapter 11 – Culverts

11.1 Introduction

A culvert is defined as a conduit for the passage of surface water under a, street/road, driveway, railroad, canal or other embankment (except detention outlets). Culvert design involves both hydraulic and structural design considerations. This chapter sets forth only the hydraulic aspects of culvert design.

Culverts may be constructed with many shapes and materials. The most commonly used shape is circular. Other shapes include elliptical, arch and box. The most common culvert materials are concrete and steel. The material selected for a culvert is dependent upon factors such as durability, strength, roughness, bedding, water-tightness and abrasion and corrosion resistance.

11.2 Culvert Hydraulics

The procedures and basic data to be used for the hydraulic evaluation of culverts in the County will be in accordance with the *Manual*, "Culverts," except as modified herein. The reader is also referred to the many texts covering the subject for additional information.

11.3 Culvert Design Standards

11.3.1 Construction Material and Pipe Size

Within the County ROW, culverts will be constructed from corrugated steel or concrete. Other materials for construction outside of County ROW will be subject to approval by Planning and Zoning.

The minimum pipe size for culverts within a public ROW will be 18 inches diameter round culvert or will have a minimum cross-sectional area of 1.6 ft2 for arch shapes. Driveway culverts will be sized to pass the minor storm ditch flow capacity without overtopping the driveway. The minimum size culvert will be an 18" x 11" CSPA (15" equivalent round pipe) with flared end sections. Larger sizes may be required by Planning and Zoning as determined by the required culvert capacity calculations. Culverts crossing a drainageway will be sized to pass a 10-year storm without street overtopping. Using future developed conditions for the 100-year runoff, the allowable street overtopping will be determined based on Table 1005.

11.3.2 Inlet and Outlet Configuration

Within the County, all culverts for drainageways are to be designed with headwalls or with flared-end sections at the inlet. Flared-end sections are only allowed on corrugated steel pipes with diameters of 42-inches (or equivalent) or less. No multiple barrel installations will be allowed unless warranted by special conditions as approved by Planning and Zoning.

Headwalls, wingwalls and flared-end sections should be designed and constructed to use the existing landforms of the site and blend with the natural landscape.

Additional protection in the form of riprap will also be required at the outlet due to the potential scouring velocities. Refer to Section 12.2.

11.3.3 Hydraulic Data

When evaluating the capacity of a culvert, the following data will be used:

a. Roughness Coefficient - Table 1101.

b. Entrance Loss Coefficients - Table 1101.

c. Capacity Curves - There are many charts, tables and curves in the literature for the computation of culvert hydraulic capacity. To assist in the review of the culvert design computations and to obtain uniformity of analysis, one of the following design aids will be used:

Urban Storm Drainage Criteria Manual, Denver, Colorado, latest revision

HY8 Culvert Analysis Version 6.1, U.S. Federal Highway Administration, Washington, D.C.

d. Design Forms - Standard Form SF-3 is to be used for determining culvert capacities. A sample computation is discussed in Section 11.4 and shown on Table 1102.

11.3.4 Velocity Considerations

In design of culverts, both the minimum and maximum velocities must be considered. A minimum velocity of flow is required to assure a self-cleansing condition of the culvert. A minimum velocity in the culvert of 3-fps at the outlet is recommended.

The maximum velocity is dictated by the channel conditions at the outlet. If the outlet velocities are less than 7-fps for grassed channels, then the minimum amount of protection is required due to the eddy currents generated by the flow transition. Higher outlet velocities will require substantially more protection. A maximum outlet velocity of 12-fps is recommended with erosion protection. If the culvert outlet velocity is greater than 12-fps, an energy dissipator will be required. Refer to Sections-12.2 for protection requirements at culvert outlet.

11.3.6 Cross Culvert Location

The surface drainage in a street/roadside ditch will not be carried in excess of 500 feet before being discharged into a natural drainageway. Grade changes of greater than 2% will require a cross culvert. The final location of culverts will be determined by existing field conditions encountered during installation. Culverts will be installed at the slope of the natural terrain.

11.3.7 Structural Design

As a minimum, all culverts will be designed to withstand an HS-25 loading (unless otherwise approved by Planning & Zoning) in accordance with the design procedures of AASHTO, "Standard Specifications for Highway Bridges," and with the pipe manufacturer's recommendation.

11.3.8 Trashracks

Trashracks may be required at the entrance of culverts for some installations as loading (unless otherwise approved by Planning & Zoning), such as areas with potential for significant debris, or in areas where public access is likely. Installation of trashracks prevents debris from entering culverts.

The following criteria will be used for design of trashracks for storm drainage applications:

1. Materials

All trashracks will be constructed with smooth steel pipe with a minimum 1.25 inches outside diameter. The trashrack ends and bracing should be constructed with steel angle sections. All trashrack components will have a corrosion protective finish.

2. Trashrack Design

The trashracks will be constructed without cross-braces (if possible) in order to minimize debris clogging. The trashrack will be designed to withstand the full hydraulic load of a completely plugged trashrack based on the highest anticipated depth of ponding at the trashrack. The trashrack will also be hinged and removable for maintenance purposes. The clear opening at the bottom should be 9 to 12 inches to permit debris at low flow to go through.

3. Bar Spacing

The steel pipe bars will be spaced with a clear opening of 4 ½ to 5 inches. In addition, the entire rack will have a minimum clear opening area (normal to the rack) at the design flow depth of four times the culvert opening area.

4. Trashrack Slope

The trashrack will have a longitudinal slope of no steeper than 3 horizontal to 1 vertical for maintenance purposes.

5. Hydraulics

Hydraulic losses through trashracks will be computed using the following equation:

$H_T = 0.11\ (TV/D)2(\text{Sin } A)$

where:

H_T = Head Loss through Trashrack (feet)

T = Thickness of Trashrack Bar (inches)

V = Velocity Normal to Trashrack (fps)

D = Center-to-Center Spacing of Bars (inches)

A = Angle of Inclination of Rack with Horizontal

This equation will apply to all racks constructed normal to the approach flow direction. The velocity normal to the trashrack will be computed considering the rack to be 50 percent plugged.

This equation is a modification of the equation presented in *Design Standards No. 3 - Canals and Related Structures*, U.S. Department of the Interior, Bureau of Reclamation, Denver, Colorado. The modification consists of changing the computed head loss from inches to feet and eliminating the factor which accounts for approach flow directions other than normal to the trashrack.

Safety Grates will be required when it is not possible to "see daylight" from one end of the culvert to the other, the culvert is less than 42 inches in diameter, or conditions within the culvert (bends, obstructions, vertical drops) or at the outlet are likely to trap or injure a person.

11.4 Design Example

The procedure recommended to evaluate existing and proposed culverts is based on the procedures presented in HEC-5, *Hydraulic Charts for the Selection of Highway Culverts* HEC No. 5, USDOT, FHWA. The methodology consists of evaluating the culvert headwater requirements, assuming both inlet control and outlet control. The rating which results in the larger headwater requirements is the governing flow condition.

A sample calculation for rating an existing culvert is presented in Table 1102. The required data are as follows:

Culvert size, length and type (48" CMP, L = 150', n = .024).

Inlet, outlet elevation and slope (5540.0, 5535.5, so = 0.030).

Inlet treatment (flared end-section).

Low point elevation of embankment (EL = 5551.9).

Tailwater rating curve (see Table 1102, Column 5).

From the above data, the entrance loss coefficient, K2, and the n-value are determined. The full flow Q and the velocity are calculated for comparison. The rating then proceeds in the following sequence:

Step 1: Headwater values are selected and entered in column 3. The headwater to pipe diameter ratio (Hw/D) is calculated and entered in column 2. If the culvert is other than circular, the height of the culvert is used.

Step 2: For the Hw/D ratios, the culvert capacity is read from the rating curves (Section-11.3.3) and entered into column 1. This completes the inlet condition rating.

Step 3: For outlet condition, the Q values in column 1 are used to determine the head values (H) in column 4 from the appropriate outlet rating curves (Section-11.3.3).

Step 4: The tailwater depths (Tw) are entered into column 5 for the corresponding Q values in column 1 according to the tailwater rating curve (i.e., downstream channel rating computations). If the tailwater depth (Tw) is less than the diameter of the culvert (D), column 6 and 7 are to be calculated (go to Step 5). If Tw is more than D, the tailwater values in column 5 are entered into column 8 for the ho values

and proceed to Step 6.

Step 5: The critical depth (dc) for the corresponding Q values in column 1 are entered into column 6. The average of the critical depth and the culvert diameter is calculated and entered into column 7 as the h_o values.

Step 6: The headwater values (H_w) are calculated according to the equation:

$$H_w = H + h_o - LS_o$$

where H is from column 4, and h_o is from column 8 (for Tw>D) or the larger value between column 5 and column 7 (for Tw<D). The values are entered into column 9.

Step 7: The final step is to compare the headwater requirements (columns 9 and 3) and to record the higher of the two values in column 10. The type of control is recorded in column 11, depending upon which case gives the higher headwater requirements. The headwater elevation is calculated by adding the controlling Hw (column 10) to the upstream invert elevation. A culvert rating curve can then be plotted from the values in columns 12 and 1.

To size a culvert crossing, the same form can be used with some variations in the basic procedures. First, a design capacity is selected and the maximum allowable headwater is determined. An inlet type (i.e., headwall) is selected, and the invert elevations and culvert slope are estimated based upon site constraints. A culvert type is then selected and first rated for inlet control and then for outlet control. If the controlling headwater exceeds the maximum allowable headwater, a different culvert configuration is selected and the procedure repeated until the desired results are achieved.

11.5 Culvert Sizing Criteria

11..5.1 Culverts within Drainageways

The sizing of a culvert is dependent upon two factors, the street classification and the allowable street overtopping. The allowable street overtopping for the various street classifications is set forth in Section 10.3. In addition to this policy, a criteria requiring that no street overtopping occur for a 10-year frequency storm has been established. Therefore, as a minimum design standard for street crossings, the following procedure will be used:

1. Using the future developed conditions 100-year runoff, the allowable street overtopping will be determined from overflow rating curves developed from the street profile crossing the waterway.

2. The culvert is then sized for the difference between the 100-year runoff and the allowable overtopping.

3. If the resulting culvert is smaller than that required to pass the 10-year flood peak without overtopping, the culvert will be increased in size to pass the 10-year flow.

The CRITERIA is considered a minimum design standard and must be modified where other factors are considered more important. For instance, if the procedure still results in certain structures remaining in the 100-year floodplain, the design frequency may be increased to lower the floodplain elevation. Also, if only a small increase in culvert size is required to prevent overtopping, then the larger culvert is recommended.

11..5.2. Cross Culverts and Driveway Culverts within Street/Roadside Ditches

Minimum sizing of culverts is delineated in Section 11.6 of these CRITERIA. As a minimum, cross culverts and driveway culverts shall be designed to accommodate the ditch capacity.

11.6 Checklist

To aid the designer and reviewer, the following checklist has been prepared:

1. Minimum culvert size within the public ROW, such as cross tubes, is 18-inch diameter round or equivalent for other shapes.

2. Minimum culvert size for street/roadside ditches at driveways is 15-inch diameter round or equivalent for other shapes.

3. Headwalls, wingwalls or flared end sections required for all culverts in accordance with these CRITERIA.

4. Check outlet velocity and provide adequate protection.

5. Check structural requirements.

Table 1101
Hydraulic Data for Culverts

Pipe Roughness Coefficients

Manning's n-value	
Sewer Type	Capacity Calculation
RCP	0.015
CSP	0.026
HDPE/HP	0.012

(D) Culvert Entrance Losses

	Type of Entrance	Entrance Coefficient, Ke
Pipe		
	Headwall	
	Grooved edge	0.20
	Rounded Edge (0.15D radius)	0.15
	Rounded edge (0.25D radius)	0.10
	Square edge (cut concrete and CMP)	0.40
	Headwall & 45° Wingwall	
	Grooved edge	0.20
	Square edge	0.35
	Headwall with Parallel Wingwalls Spaced 1.25D apart	
	Grooved edge	0.30
	Square edge	0.40
	Projecting entrance	
	Grooved edge RCP	0.25
	Square edge RCP	0.50
	Sharp edge, thin wall CMP	0.90
	Flared-end Section	0.50
Box, Reinforced Concrete		
	Headwall Parallel to Embankment (no wingwalls)	
	Square edge of 3 edges	0.50
	Rounded on 3 edges to radius of 1/12 barrel dimension	0.20
	Wingwalls at 30° to 75° to barrel	
	Square edged at crown	0.40
	Crown edge rounded to radius of 1/12 barrel dimension	0.20
	Wingwalls at 10° to 30° to barrel	
	Square edged at crown	0.50
	Wingwalls parallel (extension of sides)	
	Square edged at crown	0.70

Note: The entrance loss coefficients are used to evaluate the culvert or sewer capacity operating under outlet control.
Reference: Handbook of Steel Drainage and Highway Construction Products, *AISI 1991*

Table 1102

Standard Form SF-3 Culvert Rating

Project: *Design Example* **Location:** *Jefferson County* **Station:** *2+00*

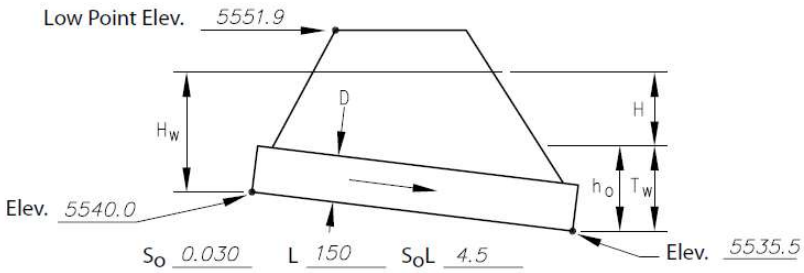

Culvert Data

Type: 48" CMP n: 0.024

Inlet: Flared End Section Q_{Full}: 13.5

K_e 0.5 K_{Full}: 10.7

Outlet Control Equations

1. $H_w = H + h_o - LS_o$
2. For $T_w < D$, $h_o = \frac{d_c + D}{2}$ or T_w (whichever is greater)
3. For box culvert: $d = 0.315(Q/B)^{2/3} \leq D$
   (for any other shapes see HEC-5)

	Inlet Control		Outlet Control						Cont.	Control	Elev.
					$T_o < D$		$T_o > D$				
Q	H_c D	H_w	H	T_w	D_c	$\frac{D_c + D}{2} = h_o$	H_o	H_w	H_w		
1	2	3	4	5	6	7	8	9	10	11	12
70	1.0	4	1.9	1.5	2.5	3.3		0.7	4	Inlet	5544.0
115	1.5	6	5.5	2.0	3.0	3.5		4.5	6	Inlet	5546.0
145	2.0(3)	8	8.9	2.5	3.4	3.7		8.1	8.1	Outlet	5548.8
170(1)	2.5(3)	10	12.5	3.0	3.7	3.9		11.9	11.9	Outlet	5551.9
195(2)	3.0(3)	12	16.0	3.5	4.0	4.0		15.5	15.5	Outlet	5555.5

Outlet Velocity, V = Q/A = 170 cfs/12.8 ft.^{2} = 13.5 fps

Notes:

(1) Culvert capacity
(2) Road overtopping
(3) Example only

Chapter 12 - Hydraulic Structures

12.1 Introduction

Hydraulic structures are used in storm drainage work to control the flow of the runoff. The energy associated with flowing water has the potential to create damage to the drainage works, especially in the form of erosion. Hydraulic structures, which include Conduit Outlet Structures, energy dissipators, check structures, bridges and irrigation ditch crossings, all control the energy and minimize the damage potential of storm runoff.

The criteria to be used in the design of hydraulic structures will be in accordance with the *Manual*. The specific criteria to be used with the modifications for the County are presented herein.

12.2 Conduit Outlet Structures

Outlet protection designed for the 100 year storm event is required for all storm-sewer and culvert locations. The design of Conduit Outlet Structures will be in accordance with the *Manual*.

12.3 Channel Grade Control Structures (Check and Drop Structures)

As discussed in chapter, "Open Channels," there is a maximum permissible velocity for major design storm runoff in grass lined channels. One of the more common methods of controlling the flow velocity is to reduce the channel invert slope, which requires a check drop to make up for the elevation difference occurring when the channel slope is reduced.

The design criteria for the check and drop structures will be in accordance with the *Manual*.

12.4 Bridges

The design of bridges within the County will be in accordance with the *Manual*. The design capacity of the bridge will be determined by the method presented in Section 11.5 of these *CRITERIA*.

12.5 Irrigation Ditch Crossings

Any proposed development in the vicinity of the ditches or canals that crosses or utilizes the canal for surface drainage or proposes to make any modifications to the existing topography which alters and/or affects water quality and drainage patterns to the ditch will have the plans approved by the ditch company prior to approval by the County.

Chapter 13 - Stormwater Quality Management

13.1 Introduction

The intent of this Chapter is to present minimum criteria for the implementation and use of BMPs in order to achieve the goal of mitigated stormwater quality during construction and after construction. Compliance with these *CRITERIA* does not require water quality monitoring by the individual developer, or quantitative descriptions of pollutant load removal. Instead, a performance-based approach is required for erosion, sediment and pollutant transport control. Individual methods must be selected and implemented to best fit the conditions and requirements of each site.

The quality of stormwater runoff from developed lands and urbanized areas can be impacted by some or all of the sources and pollutants shown in Table 1301. Stormwater quality control methods and techniques have been developed for two distinct phases of urbanization: the initial construction period of land disturbing activities and the ongoing response of the urban system to rainfall and runoff events. Site planning and engineering for developing lands must provide controls for both phases of urbanization. The general objectives for each of these two phases of urbanization are discussed in this chapter.

Table 1301

Possible Sources of Pollutants in Stormwater

Source	Contaminant
Vehicles, Machinery and Industrial Activities	Metals, Lubricants, Solvents, Paints
Lawn Care, Gardening	Pesticides, Herbicides, Fertilizers, Sediments
Household Chemicals	Paints, Solvents, Detergents, Disinfectants, Cleaners, Chlorine
General Population	Litter, Trash, Debris
Pets and Animals	Fecal Matter, Organic Wastes
Parking Lots	Oil, Grease, Automotive Fluids, Sediments
Construction	Soil and Sediment Particles

13.2 Temporary Erosion Control for Construction Activities

Construction activities that disturb the natural soil and vegetation have the potential to increase soil erosion and sediment movement. The disturbed, loose soil is easily eroded by the forces of rainfall, concentrated runoff and wind.

Erosion and sediment control practices are required, to the maximum extent practicable, on all developing sites. These practices are required to prevent disturbed soils from leaving the site and to maintain stormwater quality at a level comparable to the historic runoff conditions that existed prior to the construction activities.

Site planning and design must meet all of the objectives for stormwater quality control. Design and performance information for a variety of erosion and sediment control measures that are currently in practice or recommended for use in the region is presented in detail in the *Manual*.

The Land Disturbance Section of the ZR describes the submittal requirements and specifications for grading and erosion control plans and the minimum performance standards for site grading and erosion and sediment control.

13.3 Permanent Controls for Stormwater Quality Management

13.3.1 Objectives for Permanent Stormwater Quality Control

Jefferson County requires that land undergoing development activities incorporate BMPs to achieve the objectives of permanent stormwater quality control. The following principles and objectives of stormwater quality BMPs will be used by the County to determine if adequate controls have been proposed during the site design and development process:

Minimize, to the maximum extent practicable, impacts of stormwater on receiving waters. An effective level of urban pollutant removal should be accomplished by the selected BMPs.

The site's physical constraints need to be considered. Select and design BMPs to work within the conditions on the site.

Economic impacts of the selected BMPs must be considered. Controls must be evaluated for installation (construction) costs and for future operation and/or maintenance costs.

Multi-use benefits should be incorporated within stormwater quality features whenever possible. Land intensive BMPs, such as detention/retention ponds and vegetative strips should be designed to incorporate recreational and aesthetic features such as open space and landscape values whenever possible.

Opportunities for participation in master-planned regional facilities have been considered. The County will be contacted to determine if regional facilities for stormwater quality control may be available to the planned site.

13.3.2 BMPs for Permanent Control

The Four-Step Process described in the *Manual*, is required for selecting structural BMPs in developing areas. Selection of a BMP must include consideration of long-term function and maintenance design expectations, an estimate of annual maintenance costs and maintenance schedule, the source of funding and anticipated life of the structural BMP.

Step 1. Employ Runoff Reduction Practices

To reduce runoff peaks and volumes from urbanizing areas, employ a practice generally termed "minimizing directly connected impervious areas" (MDCIA). The principal behind MDCIA is twofold – to reduce impervious areas and to route runoff from impervious surfaces over grassy areas to slow down runoff and promote infiltration. The benefits are less runoff, less stormwater pollution and less cost for drainage infrastructure.

a. Reduce "Actual" Impervious Area

- Replace regular pavement with permeable interlocking concrete pavement (PICP) and reinforced grass pavement.
- Replace storm sewer or hard surface swales with grass swales

b. Reduce "Effective" Impervious Area

- Direct runoff from impervious surfaces to grass buffers or grass swales
- Replace curb and gutter with grass swales
- Direct stormwater from parking lot(s) into an infiltration and/or water quality BMP prior to conveyance to the stormwater detention and water quality pond

Step 2. Provide Water Quality Capture Volume (WQCV)

A fundamental requirement for any site addressing stormwater quality is to provide WQCV. One or more of the many types of water quality basins, each draining slowly to provide for long-term settling of sediment particles, may be selected (*Manual*, Chapter 4, Treatment BMP's).

- Permeable Pavement Systems
- Bioretention (Rain Garden or Porous Landscape Detention)
- Extended Detention Basin
- Sand Filter Basin
- Constructed Wetland Basin
- Underground Practices
- Retention Pond

Step 3. Stabilize Drainageways

Drainageway erosion, natural and manmade, can be a major source of sediment and associated constituents, such as phosphorus. Natural drainageways are often subject to bed and bank erosion when urbanizing areas increase the frequency, rate and volume of runoff. It is important that drainageways adjacent to or traversing development sites be stabilized. One of three basic methods of stabilization

may be selected.

- Constructed Grass or Riprap
- Stabilized Natural Channel
- Constructed Wetland Channel

Step 4. Implement Industrial and Commercial BMPs

If the development includes industrial or commercial uses, the need for specialized BMPs must be considered.

- Covering Storage and Handling Areas
- Spill Containment and Control

Other BMPs

Manufactured devices such as water quality vaults and inlets, infiltration trenches and oil/grease separators, may be considered when stormwater quality is not required in accordance with Section 3.3.7 and site constraints do not allow for full implementation of Step 1 and Step 2 BMPs.

13.3.3 Minimum Design Criteria

It is expected that the BMPs designed for each site will vary depending on land use, extent of development, redevelopment constraints and the physical characteristics of the site (soils, slope and runoff).

The County will evaluate the adequacy and appropriateness of the proposed BMPs based on their fulfillment of the previously stated objectives, as well as the satisfaction of the following minimum design criteria:

1. A site specific Stormwater Quality Control Plan and associated hydraulic calculations will be incorporated in the Phase III Drainage Report and plan describing: the type of BMPs selected and associated hydraulic calculations, a construction and implementation schedule and a description of long term maintenance requirements and responsibilities.

2. The design of sites will incorporate one or more BMPs from Step 1 and Step 2 designed to capture and treat the calculated EURV as defined in the *Manual*.

When incorporating Excess Urban Runoff Volume (EURV) into a stormwater quantity detention basin, the capacity will be based on the following:

Onstream WQCV and EURV facilities are not recommended unless they are designed as regional facilities. If a non-regional WQCV and EURV facility is placed onstream, it must be designed to serve the upstream watershed based on current development conditions.

3. The design of sites will incorporate one or more BMPs from Steps 3 and 4 depending on the planned use of the site and the proximity to drainageways.

4. Design criteria for manufactured devices are dependent on the specific device. The appropriateness of a device will be considered on a case-by-case basis.

5. Non-residential projects which include more than the required number of parking spaces will be required to employ one or more Step 1 BMPs to limit the effective impervious area which would result from the minimum required number of parking spaces as determined by the ZR.

6. Permanent erosion protection and stabilization measures will be provided for all disturbed areas.

13.3.4 Control Measure Requirements

The control measures for applicable development sites shall meet one of the following base design standards listed below:

(A) WQCV Standard: The control measure(s) is designed to provide treatment and/or infiltration of the WQCV and:

1) 100% of the applicable development site is captured, except Jefferson County staff may exclude up to 20%, not to exceed 1 acre, of the applicable development site area when Jefferson County staff has determined that it is not practicable to capture runoff from portions of the site that will not drain towards control measures. In addition, the applicant must provide documentation that the implementation of a separate control measure for that portion of the site is not practicable (e.g., driveway access that drains directly to street).

2) Evaluation of the minimum drain time shall be based on the pollutant removal mechanism and functionality of the control measure implemented. Consideration of drain time shall include maintaining vegetation necessary for operation of the control measure (e.g., wetland vegetation).

(B) Pollutant Removal Standard: The control measure(s) is designed to treat at a minimum the 80th percentile storm event. The control measure(s) shall be designed to treat stormwater runoff in a manner expected to reduce the event mean concentration of total suspended solids (TSS) to a median value of 30 mg/L or less.

1) 100% of the applicable development site is captured, except Jefferson County staff may exclude up to 20% not to exceed 1 acre of the applicable development site area if Jefferson County staff has determined that it is not practicable to capture runoff from portions of the site that will not drain towards control measures. In addition, Jefferson County staff must also determine that the implementation of a separate control measure for that portion of the site is not practicable (e.g., driveway access that drains directly to street).

(C) Runoff Reduction Standard: The control measure(s) is designed to infiltrate into the ground where site geology permits, evaporate, or evapotranspire a quantity of water equal to 60% of what the calculated WQCV would be if all impervious area for the applicable development site discharged without infiltration. This base design standard can be met through practices such as green infrastructure. “Green infrastructure” generally refers to control measures that use vegetation, soils, and natural processes or mimic natural processes to manage stormwater. Green infrastructure can be used in place of or in addition to low impact development principles.

(D) Applicable Development Site Draining to a Regional WQCV Control Measure: The regional WQCV control measure must be designed to accept the drainage from the applicable development site. Stormwater from the site must not discharge to a water of the state before being discharged to the regional WQCV control measure. The regional WQCV control measure must meet the requirements of the MS4 Permit.

(E) Applicable Development Site Draining to a Regional WQCV Facility: The regional WQCV facility is designed to accept drainage from the applicable development site. Stormwater from the site may discharge to a water of the state before being discharged to the regional WQCV facility. Before discharging to a water of the state, at least 20 percent of the upstream imperviousness of the applicable development site must be disconnected from the storm drainage system and drain through a receiving pervious area control measure comprising a footprint of at least 10 percent of the upstream disconnected impervious area of the applicable development site. The control measure must be designed in accordance with a design manual identified by the permittee. In addition, the stream channel between the discharge point of the applicable development site and the regional WQCV facility must be stabilized.

The regional WQCV facility must meet the following requirements:

1) The regional WQCV facility must be implemented, functional, and maintained following good engineering, hydrologic and pollution control practices.

2) The regional WQCV facility must be designed and maintained for 100% WQCV for its entire drainage area.

3) The regional WQCV facility must have capacity to accommodate the drainage from the applicable development site.

4) The regional WQCV facility be designed and built to comply with all assumptions for the development activities planned within its drainage area, including the imperviousness of its drainage area and the applicable development site.

5) Evaluation of the minimum drain time shall be based on the pollutant removal mechanism and functionality of the facility. Consideration of drain time shall include maintaining vegetation necessary for operation of the facility (e.g., wetland vegetation).

6) The regional WQCV facility shall meet the requirements in the MS4 Permit for the regional WQCV facility consistent with requirements and actions for control measures.

7) The regional WQCV facility must be subject to Jefferson County's authority consistent with requirements and actions for a Control Measure in accordance with the MS4 Permit.

8) Regional Facilities must be designed and implemented with flood control or water quality as the primary use. Recreational ponds and reservoirs may not be considered Regional Facilities. Water bodies listed by name in surface water quality classifications and standards regulations (5 CCR 1002-32 through 5 CCR 1002-38) may not be considered regional facilities.

(F) Constrained Redevelopment Sites Standard:

1) Applicability: The constrained redevelopment sites standard applies to redevelopment sites meeting the following criteria:

(a) The applicable redevelopment site is for a site that has greater than 75% impervious area, and

(b) Jefferson County staff has determined that it is not practicable to meet any of the design standards in the MS4 Permit, or

(c) Jefferson County staff determination shall include an evaluation of the applicable redevelopment sites ability to install a control measure without reducing surface area covered with the structures.

2) Constrained Redevelopment Sites Design Standard: The control measure(s) is designed to meet **one** of the following:

(a) Provide treatment of the WQCV for the area captured. The captured area shall be 50% or more of the impervious area of the applicable redevelopment site. Evaluation of the minimum drain time shall be based on the pollutant removal mechanism and functionality of the control measure implemented,

(b) The control measure(s) is designed to provide for treatment of the 80th percentile storm event. The control measure(s) shall be designed to treat stormwater runoff in a manner expected to reduce the event mean concentration of total suspended solids (TSS) to a median value of 30 mg/L or less. A minimum of 50% of the applicable development area including 50% or more of the impervious area of the applicable development area shall drain to the control measure(s). This standard does not require that 100% of the applicable redevelopment site area be directed to control measure(s) as long as the overall removal goal is met or exceeded (e.g., providing increased removal for a smaller area), or

(c) Infiltrate, evaporate, or evapotranspirate, through practices such as green infrastructure, a quantity of water equal to 30% of what the calculated WQCV would be if all impervious area for the applicable redevelopment site discharged without infiltration.

13.3.5 Site Plan Requirements

(A) Site Plan Requirements: Site plans that include control measures for the applicable development sites must include the following:

1) Design details for all structural control measures implemented to meet the requirements of the MS4 Permit.

2) A narrative reference for all non-structural control measures for the site, if applicable. "Non-structural control measures" are control measures that are not structural control measures, including control measures that prevent or reduce pollutants being introduced to water or that prevent or reduce the generation of runoff or illicit discharges.

3) Documentation of operation and maintenance procedures to ensure the long term observation, maintenance, and operation of the control measures. The documentation shall include frequencies for routine inspections and maintenance activities.

4) Documentation regarding easements or other legal means for access of the control measure sites for operation, maintenance, and inspection of control measures.

(B) Site Plan Review: The site plan review shall include the following minimum requirements designed to prevent inadequate control measures from being implemented or modified:

1) Jefferson County approval of the control measures shall include confirmation that control measures meet the requirements of the MS4 Permit.

2) Jefferson County approval of the that site plans meet the requirements of the MS4 Permit

Chapter 14 – Detention

14.1 Introduction

The criteria presented in this chapter will be used in the design and evaluation of all facilities. The review of all planning submittals (refer to Chapter 2) will be based on the criteria presented in this section.

The main purpose of a detention facility is to store the excess storm runoff associated with an increased basin imperviousness and discharge this excess at a rate similar to the rate experienced from the basin without development. Any special design condition which cannot be defined by these *CRITERIA* will be reviewed by Planning and Zoning before proceeding with design.

Dams and water diversion/detention areas should be designed and constructed to appear as natural features, creating site amenities. Techniques to achieve this include creation of topographic changes that mimic natural conditions (including a variety of slope changes), using natural materials such as stone, blending with the textures and patterns of the surrounding landscape and using materials that match the local environment. When possible, preserve existing drainage patterns.

14.2 Detention Methods

The various detention methods are defined on the basis of where the facility is constructed, such as open space detention, parking lot or underground. Full spectrum detention is required for all new storm drainage facilities. Full spectrum detention is required for all modified facilities if additional pond volume is necessary due to an increase in the proposed development area and/or increased designed impervious area. Full Spectrum Detention will be designed as outlined in Chapter 13 and the *Manual*.

14.3 Design Criteria

14.3.1 Volume and Release Rates

The maximum release rates, volumes and drain times are determined from 90% of pre-developed flow conditions *or the latest update from the Manual and design spreadsheets*.

When designing water quality and detention facilities reference the latest version of Urban Drainage UD-Detention software.

Drain times must be in conformance with CRS 37-92-602 (8).

14.3.2 Design Frequency

All detention facilities are to be designed for the 100-year recurrence interval flood.

14.3.3 Hydraulic Design

Hydraulic design data for sizing of detention facilities outlet works is as follows:

1. Weir flow

The general form of the equation for horizontal crested weirs is:

$Q = CLH^{3/2}$

Where Q = discharge (cfs)

C = weir coefficient

(*Table 1401*)

L = horizontal length (feet)

H = total energy head (feet)

Another common weir is the v-notch; the equation is as follows:

$Q = 2.5 \tan(\theta/2)H^{5/2}$

Where θ = angle of the notch at the apex (degrees)

When designing or evaluating weir flow, the effects of submergence must be considered. A single check on submergence can be made by comparing the tailwater to the headwater depth. The example calculation for a weir design on Figure 1403 illustrates the submergence check.

2. Orifice Flow

The equation governing the orifice opening and plate is the orifice flow equation:

$Q = CdA\,(2gh)^{1/2}$

Where Q = Flow (cfs)

C_d = Orifice coefficient

A = Area (ft^2)

g = Gravitational constant = 32.2 ft/sec^2

h = Head on orifice measured from centerline of orifice (ft)

An orifice coefficient (C_d) value of 0.65 will be used for sizing of square edged orifice openings and plates.

14.4 Design Standards for Open Space Detention

14.4.1 State Engineer's Office

Any dam constructed for the purpose of storing water, with a surface area, volume or dam height as specified in CRS 37-87-105 as amended, will require the approval of the plans by the State Engineer's Office. All detention storage areas will be designed and constructed in accordance with these *CRITERIA*. Those facilities subject to the state statutes will be designed and constructed in accordance with the criteria of the state.

14.4.2 Grading Requirements

Slopes on riprapped earthen embankments will not be steeper than 3 (horizontal) to 1 (vertical). For grassed detention facilities, the minimum bottom slope will be 2.0 percent measured perpendicular to the trickle channel. Slopes for detention ponds that are eligible for Urban Drainage maintenance assistance will not be steeper than 4 (horizontal) to 1 (vertical).

14.4.3 Retaining Walls

Retaining walls are permitted in detention ponds below the 100-year water surface elevation as long as all of the following requirements are met.

- The retaining wall must be made of large blocks (one-ton weight per block or heavier) or monolithic pour concrete.

- The retaining wall must not exceed 50% of the detention pond perimeter for residential or institutional use.

- Safety improvements are provided as required by Planning and Zoning. Examples include but are not limited to fencing and guardrails.

14.4.4 Freeboard Requirements

The minimum required freeboard for open space detention facilities is 1.0 foot above the computed 100-year water surface elevation.

14.4.5 Trickle Flow Control

All grassed bottom detention ponds, except porous landscape detention, will include a concrete lined trickle channel or equivalent performing materials and design. Trickle flow criteria is presented in Section 7.4.2.6(a).

14.4.6 Outlet Configuration

See the *Manual's* Outlet Structure Fact Sheet in Chapter 4 of Volume 3 for details. Minimum pipe outlet size is 15 inches. Trash racks are required for all water quality and EURV openings and will be designed in accordance with the *Manual*.

The outlet will be designed to minimize unauthorized modifications, which affect proper function. A sign with a minimum area of 0.75 square feet will be attached to the outlet or posted nearby with the following message:

WARNING

Unauthorized modification of this outlet is a knowing violation of Section 309 of the Clean Water Act.
Punishment: Fine and/or Imprisonment: 3-6 years

The 100-year discharge must pass over the weir and therefore the weir must be of adequate length. The effective weir length (L) occurs for three sides of the box. To ensure the 100-year control occurs at the throat of the outlet pipe, a 50 percent increase in the required weir length is required. In addition, the outlet pipe must have an adequate slope to ensure throat control in the pipe.

14.4.7 Embankment Protection

Whenever a detention pond uses an embankment to contain water, the embankment will be protected from catastrophic failure due to overtopping. Overtopping can occur when the pond outlets become obstructed or when a larger than 100-year storm occurs. Failure protection for the embankment will be provided by a separate emergency spillway having a minimum capacity of twice the maximum release rate for the 100-year storm, or in the form of a buried heavy riprap layer on the entire downstream face of the embankment. Emergency spillways will be directed toward an open channel, natural drainageway, street/roadside ditch or a street (see Figure 1407). Structures will not be permitted in the path of the emergency spillway or overflow. The invert of the emergency spillway should be set equal to or above the 100-year water surface elevation.

14.4.8 Vegetation Requirements

All open space detention ponds under 7000 feet in elevation will be revegetated by either irrigated sod or natural dry-land grasses in accordance with the *Manual*. Detention ponds above 7000 feet in elevation will be revegetated according to the recommendations of the JCD and/or the *Jefferson County Small Site Erosion Control Manual*.

14.5 Design Standards for MPLD

MPLD may be used only for single family residential developments within the mountains. See Figure 1408 for the design requirements for MPLD.

All non-lot specific designs of MPLD is required at the time of development process. Lot specific design of the MPLD may be delayed until the time of building permit at the discretion of the Planning and Zoning subject to the following requirements.

- The Phase III Drainage Report includes the MPLD volume calculations and soil type/classification and percolation test if in soil type C and/or D

- The Phase III Drainage Report discusses the general location of the MPLD's and the proposed septic system, if any
- The Phase III Drainage Report includes a typical design of an MPLD
- Drainage easements and performance guarantees for MPLD's are provided

14.6 Design Standards for Parking Lot Detention

The requirements for parking lot detention is as follows:

14.6.1 Depth Limitation

The maximum allowable design depth of the ponding for the 100-year flood is 12 inches.

14.6.2 Freeboard Requirements

The minimum required freeboard for parking lot detention facilities is .25 feet above the computed 100-year water surface elevation. There may need to be more than .25 feet of freeboard depending on overflow weir capacity calculations.

14.6.3 Overflow Requirements

All parking lot detention ponds will have a safe overflow that at a minimum has capacity for the 100-year allowable release rate.

14.6.4 Outlet Configuration

The minimum pipe size for the outlet is 15" diameter where a drop inlet is used to discharge to a storm sewer or drainageway. Where a weir and a small diameter outlet through a curb are used, the size and shape are dependent on the discharge/storage requirements. A minimum pipe size of 3" diameter is recommended.

14.6.5 Performance

To assure that the detention facility performs as designed, maintenance access will be provided in accordance with Section 3.3.9. The outlet will be designed to minimize unauthorized modifications which affect function. Any repaving of the parking lot will be evaluated for impact on volume and release rates and is subject to approval by Planning and Zoning

14.6.6 Flood Hazard Warning

All parking lot detention areas will have a minimum of two signs posted identifying the detention pond area. The signs will have a minimum area of 1.5 square feet and contain the following message:

WARNING

This area is a detention basin and is subject to periodic flooding to a depth of (provide design depth).

Any suitable materials and geometry of the sign are permissible, subject to approval by Planning and Zoning.

14.6.7 EURV

EURV in a parking lot must meet the standards for permeable interlocking concrete pavement (PICP) and reinforced grass pavement outlined in the *Manual*.

14.7 Design Standards for Underground Detention

The requirements for underground detention are as follows:

14.7.1 Materials

Underground detention will be constructed using ASP, HP, HDPE or RCP. The pipe thickness cover, bedding and backfill will be designed to withstand HS-20 loading or as required by Planning and Zoning.

14.7.2 Configuration

Pipe segments will be sufficient in number, diameter and length to provide the required minimum storage volume for the 100-year design. As an option, the design can be stored in the pipe segments and the difference for the 100-year stored above the pipe in an open space detention (Section 14.4) or in a parking lot detention (Section 14.5). The minimum diameter of the pipe segments will be 36 inches.

The pipe segments will be placed side by side and connected at both ends by elbow tee fittings and across the fitting at the outlet (see Figure 1405). The pipe segments will be continuously sloped at a minimum of 0.25% to the outlet. Manholes for maintenance access (see Section 14.6.5) will be placed in the tee fittings and in the straight segments of the pipe, when required.

Permanent buildings or structures will not be placed directly above the underground detention.

14.7.3 Overflow Requirements

All underground detention will have a safe overflow that at a minimum has capacity for the 100-year allowable release rate.

14.7.4 Inlet and Outlet Design

The outlet from the detention will consist of a short (maximum 25 ft.) length(s) of CSP, HP or RCP with a 15" minimum diameter. A two-pipe outlet may be required to control both design frequencies. The invert of the lowest outlet pipe will be set at the lowest point in the detention pipes. The outlet pipe(s) will discharge into a standard manhole (see CDOT M-604-20) or into a drainageway with erosion protection provided per Sections 11.3.2, 12.2 and 12.3. If an orifice plate is required to control the release rates, the plate(s) will be hinged to open into the detention pipes to facilitate back flushing of the outlet pipe(s).

Inlet to the detention pipes can be by way of surface inlets and/or by a local private storm sewer system.

14.7.5 EURV

EURV facilities must be designed in accordance with the *Manual* design criteria, unless it is demonstrated that the proposed method is as effective as the *Manual* design criteria.

14.7.6 Maintenance Access

Access easements to the detention site will be provided in accordance with Section 3.3.10. To facilitate cleaning of the pipe segments, 3-foot diameter maintenance access ports will be placed according to the following schedule:

Maintenance Access Requirements

Detention Pipe Size	Maximum Spacing	Minimum Frequency
36" to 54"	150'	Every pipe segment
60" to 66"	200'	Every other pipe segment
>66"	200'	One at each end of the battery of pipes

The manholes will be constructed in accordance with the detail on Figure 1405.

14.8 Design Standards for Combined Detention Ponds

Combined detention ponds, such as open space/parking lot detention, must meet the relevant set of design standards for design of each portion of the detention pond.

Table 1401

Weir Flow Coefficients

Shape	Coefficient	Comments	Schematic
Sharp Crested	- (H in feet)		
Projection Ratio (H/P = 0.4)	3.4	H < 1.0	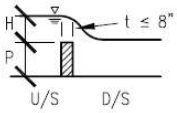
Projection Ratio (H/P = 2.0)	4.0	H > 1.0	
Broad Crested			
W/Sharp U/S Corner	2.6	Minimum Value	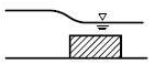
W/Rounded U/S Corner	3.1	Critical Depth	
Triangular Section			
A) Vertical U/S Slope			
1:1 D/S Slope	3.8	H > 0.7	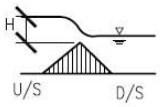
4:1 D/S Slope	3.2	H > 0.7	
10:1 D/S Slope	2.9	H > 0.7	
B) 1:1 U/S Slope			
1.1 D/S Slope	3.8	H > 0.5	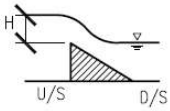
3:1 D/S Slope	3.5	H > 0.5	
Trapezoidal Section			
1:1 U/S Slope, 2:1 D/S Slope	3.4	H > 1.0	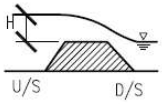
2:1 U/S Slope, 2:1 D/S Slope	3.4	H > 1.0	
Road Crossings			
Gravel	3.0	H > 1.0	
Paved	3.1	H > 1.0	

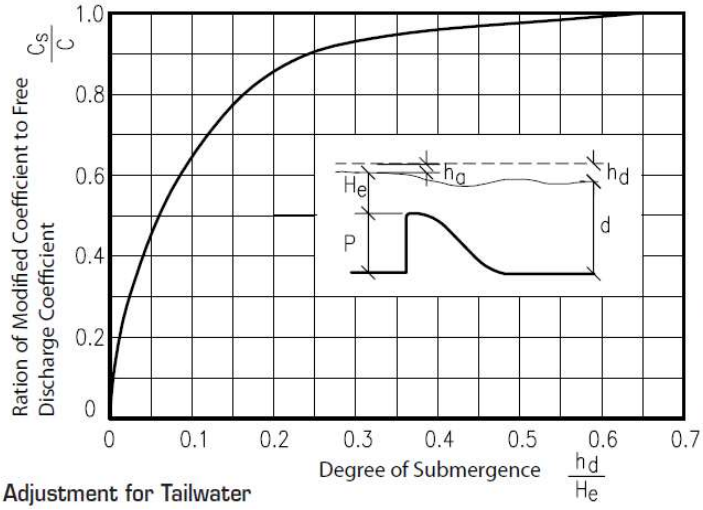

Reference: King & Brater, Handbook of Hydraulics, *McGraw Hill Book Company, 1963* – Design of Small Dams, *Bureau of Reclamation, 1977*

Adjustment for Tailwater

Figure 1401

Detention Pond Outlet Configurations

For small sites <5 acres

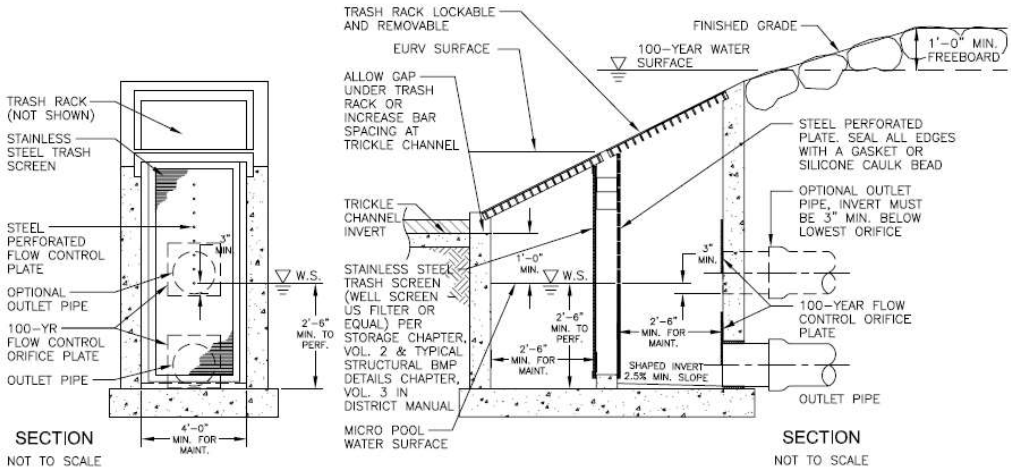

Adopted from the City and County of Denver Storm Drainage Criteria

Figure 1402

Detention Pond Details

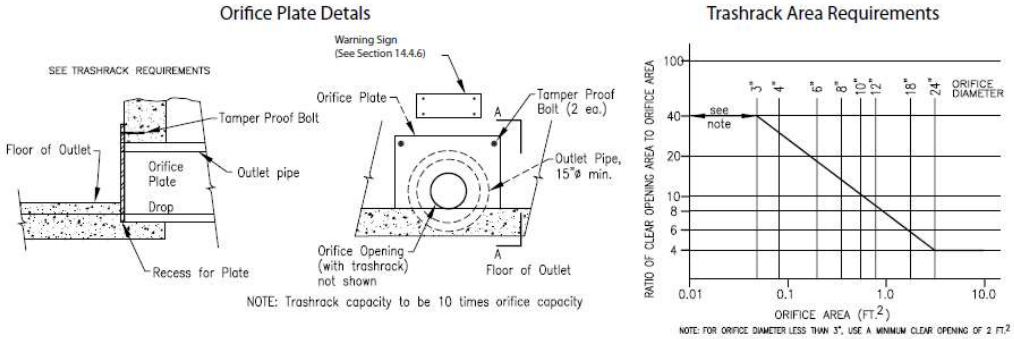

Figure 1403
Weir Design Example

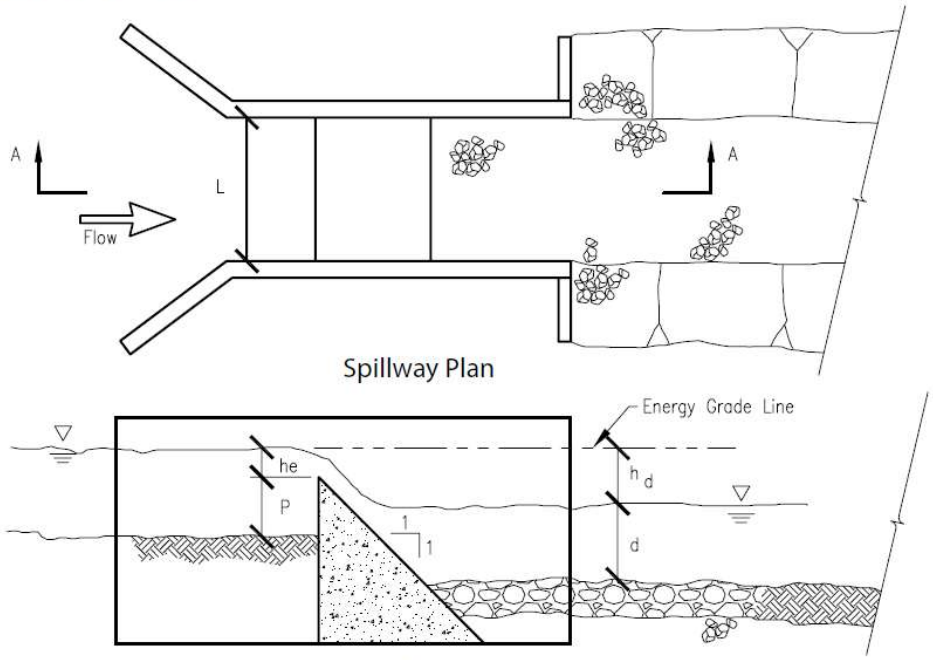

GIVEN: Q = 100 CFS, Triangular weir with vertical face, and 1:1 downstream slope, p = 2', h_e = 2', tailwater depth = 4.5', h_d = 1.5

FIND: L, and check submergence

Solution: $L_w = Q/CH^{3/2} = (100)/(3.8)/(2)^{3/2} = 9.3$ FT.

Submergence check

$\frac{h_d}{h_e} = \frac{1.5}{2.0} = 0.75$, then from Table 1401, $C_s/C = 1.0$, therefore no submergence adjustment is required.

Figure 1404
Outlet Design Example

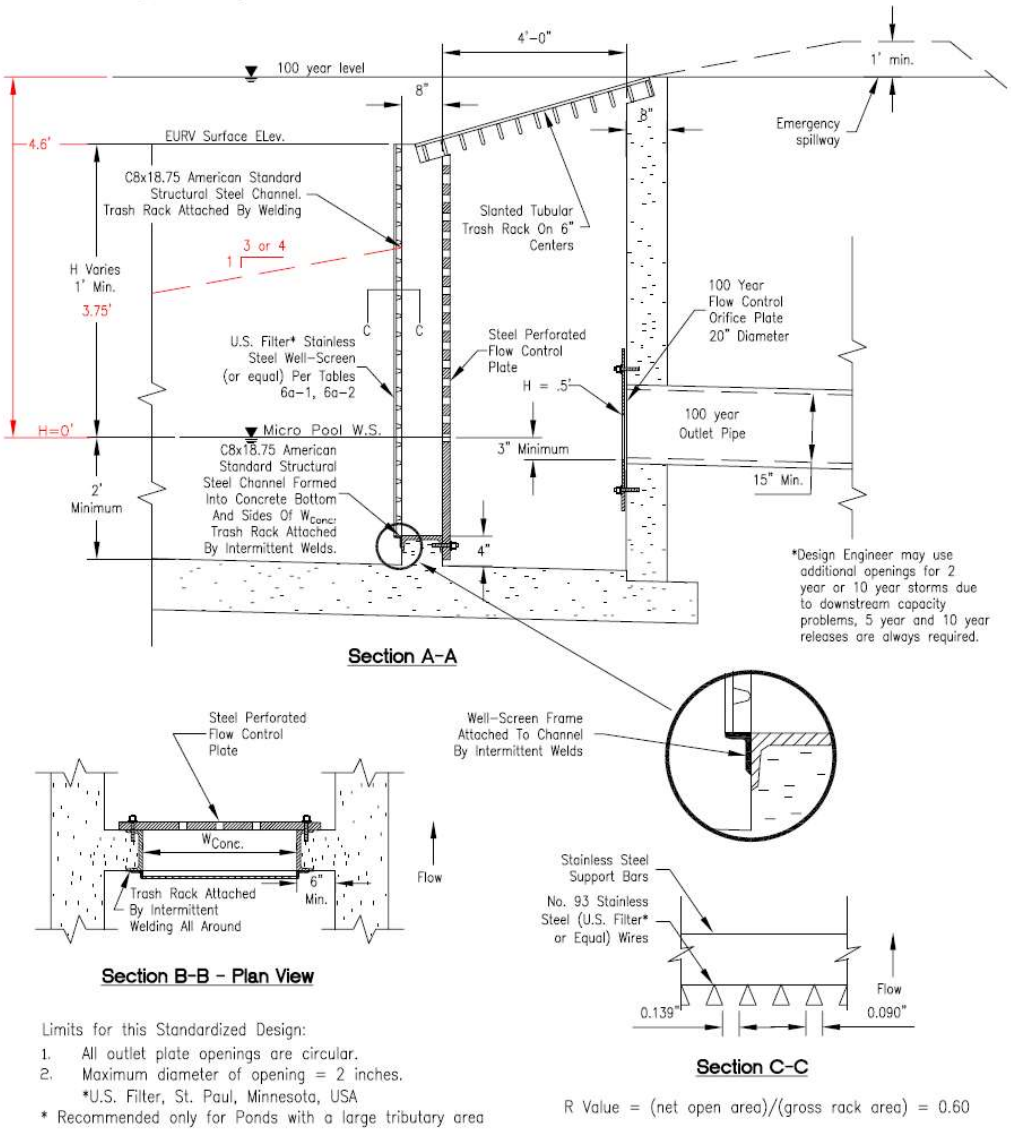

Limits for this Standardized Design:

1. All outlet plate openings are circular.
2. Maximum diameter of opening = 2 inches.

*U.S. Filter, St. Paul, Minnesota, USA

* Recommended only for Ponds with a large tributary area

R Value = (net open area)/(gross rack area) = 0.60

Red indicates design example

Reference: Urban Drainage and Flood Control District Drainage Criteria

Figure 1405

Underground Detention

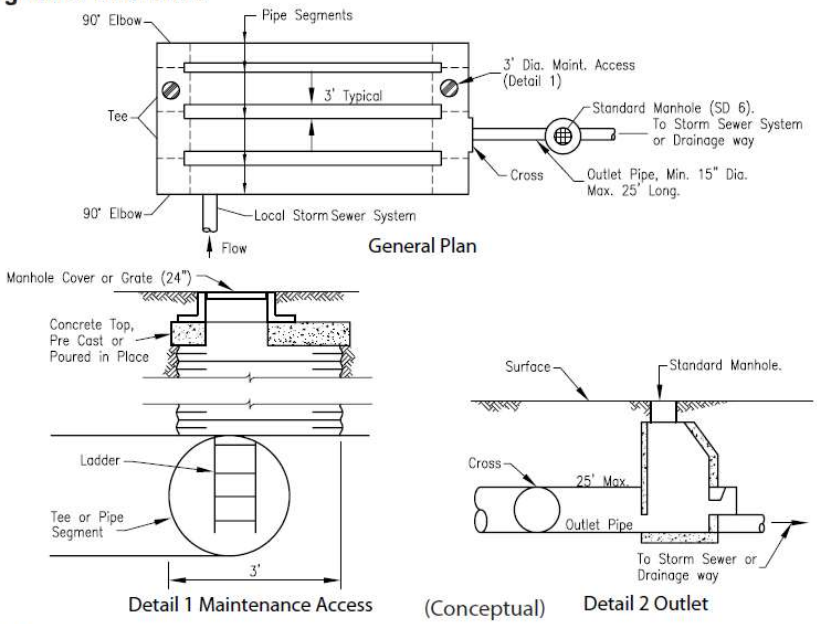

Figure 1406

Pond Forebay With Dissipator

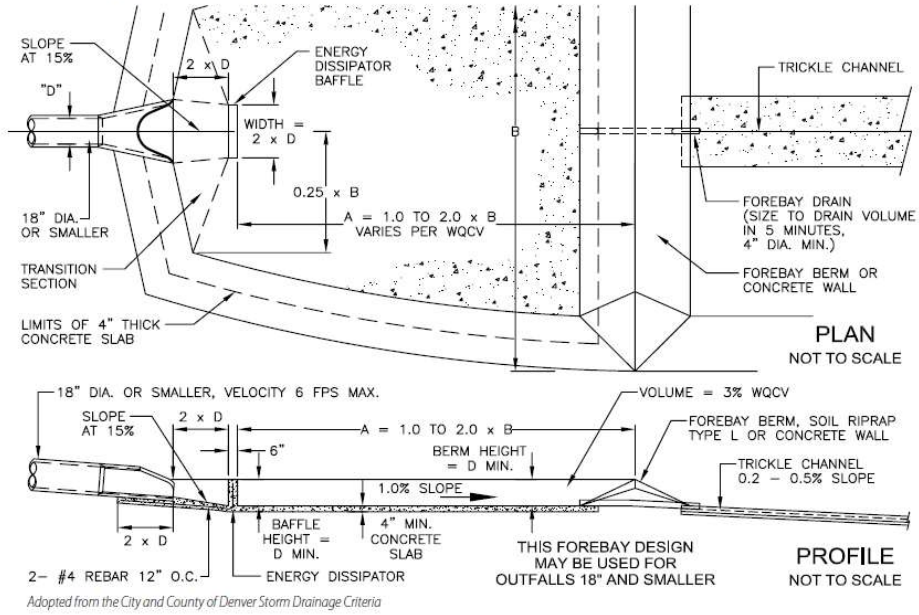

Adopted from the City and County of Denver Storm Drainage Criteria

Figure 1407

Embankment Protection Details And Rock Sizing Chart

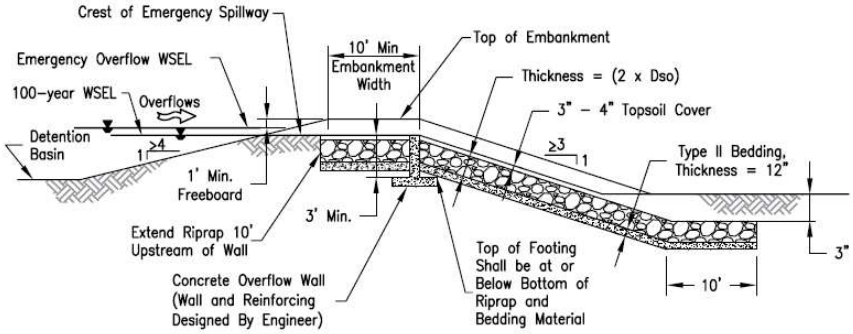

Emergency Spillway Profile

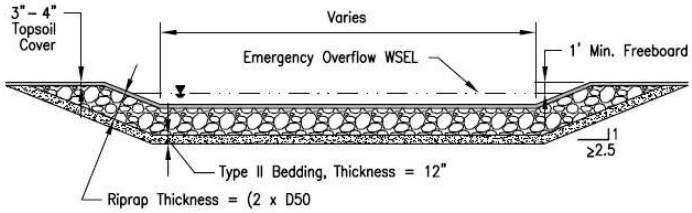

Spillway Channel at Crest and Downstream Side of Embankment

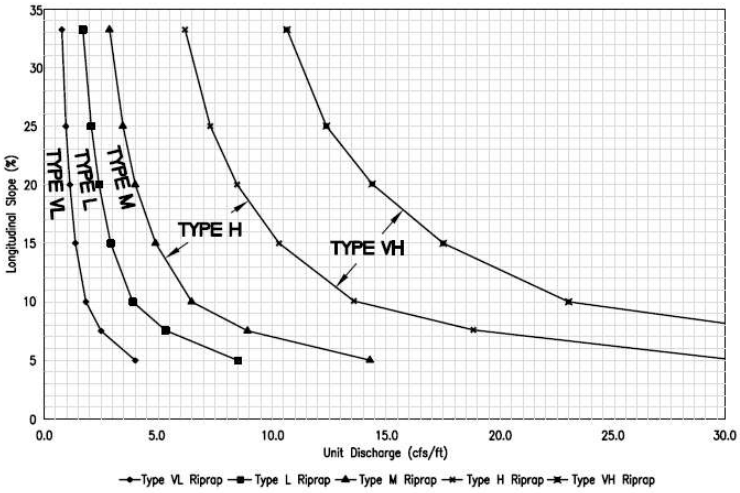

Reference: Douglas County Drainage Criteria

Figure 1408
Mountain Porous Landscape Design

NOTES:

1. Volume of Mountain Porous Landscape Design pond (MPLD): 100 year plus full water quality volume.
2. NRCS Hydrologic Soil Group:

a.) Type A and B - No percolation test required.

b.) Type C and D - Provide percolation test data for each proposed MPLD. Perform percolation test at bottom elevation of proposed MPLD. Provide soil classification analysis.

3. Provide verification that there are at least 4-feet of suitable material below the bottom of the proposed MPLD to allow for sufficient infiltration. Maximum drain time is 72 hours.
4. Maximum depth of MPLD: 5-feet including 1-foot of freeboard.
5. Maximum internal and external slopes: 2: 1 (H: V). Provide up-slopejin-flow erosion control measures. Rolled erosion control products are required for slopes exceeding 3: 1.
6. Minimum pond bottom width: 2-feet.
7. Minimum top of berm width: 1-foot.
8. Elevation of top of berm shall be with in 0.10 of a foot.
9. Overflow slope rip-rap: Type L minimum 12-inch minus. Verify with rip-rap calculations.
10. If the existing slope exceeds 30%, provide detail for key-in into native material. Based on site conditions, a slope stability analysis may be required.
11. The design engineer shall perform an open-hole inspection at time of excavation to verify soil conditions. The design engineer shall certify the volume of the MPLD with as-built drawings.
12. The MPLD shall be maintained by the property owner.

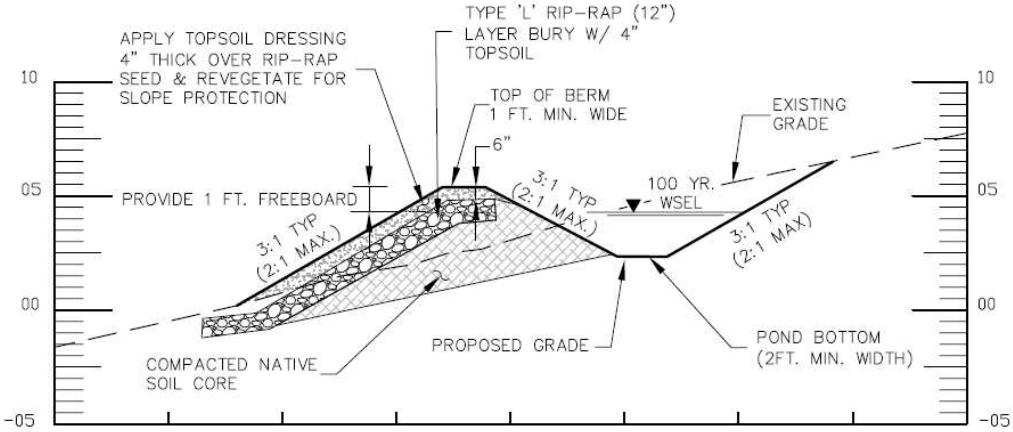

Appendix

Detention Facility Construction Drawing Checklist

General

- ☐ Overall plan view of Detention Basin
- ☐ Pond profile(s)
- ☐ Enlarged plan view of forebay(s) and construction details
- ☐ Enlarged plan view of micropool(s) and construction details
- ☐ Outlet structure construction details
- ☐ Construction details of other features and components

Overall Detention Plan View Details

- ☐ Prepare at a maximum scale of 1" =50'
- ☐ Proposed contours with contour labels and slope labels
- ☐ Existing contours with contour labels
- ☐ Show location and label forebay(s)
- ☐ Show location and label micropool
- ☐ Show location and label outlet structure
- ☐ Show location and label emergency overflow spillway
- ☐ Show location and label inflow pipe(s)
- ☐ Show location of stormwater management facility sign(s)
- ☐ Show location and label concrete trickle/low flow channel(s)
- ☐ Show location of riprap outlet protection
- ☐ Show location and label access/maintenance road(s) or ramps
- ☐ Show EURV water surface limits
- ☐ Show 100-year water surface elevation
- ☐ Existing and proposed utilities within or adjacent to Detention Basin
- ☐ Property/Tract boundaries
- ☐ Existing and proposed easements
- ☐ Label all proposed walls and provide spot elevations at top and bottom of wall

Detention Basin Profile(s)

- ☐ Low flow/trickle channel profile from inlet(s) to outlet structure

- Invert elevations, longitudinal grades along flow path
- Profile through outlet structure and outlet pipe (provide pipe sizes, length, slope and hydraulic grade line)
- Invert elevations and longitudinal slopes of outlet structure features
- Invert elevations and longitudinal slopes of outfall pipe
- EURV water surface elevation
- 100-year water surface elevation
- Micropool depths and elevations
- Emergency overflow spillway elevation (with top of bank elevations)
- Energy dissipation/rip rap protection at pond outlet
- Energy dissipation/rip rap protection at emergency overflow spillway

Enlarged plan view of forebay(s) and construction details (See Figure 1406)

- Prepare at a maximum scale of 1” = 20’
- Enlarged plan view with dimensions and spot elevations, slope of bottom
- Cross section of concrete lined forebay with concrete slopes or 6” curb sides
- Structural/reinforcing details
- Energy dissipation structure details
- Drain pipe or weir detail
- Overflow protection, rip rap size, depth, dimension and location
- Maintenance access to forebay

Enlarged plan view of micropool and construction details

- Prepare at a maximum scale of 1” = 20’
- Enlarged plan view with dimensions, depths and spot elevations
- Cross section of concrete lined or grouted boulder micropool
- Permanent pool water surface elevation
- Floor elevation
- Details of low flow/trickle channel connection to micropool
- Details of connection to or interface with outlet structure
- Details for safety ramp/improvements

Outlet structure construction details

- Enlarged view with dimensions, depths and spot elevations

- Enlarged plan view to show proposed detailed grading/spot elevations around structure
- Cross sections, as required, to show depths, concrete thicknesses, EURV, 100-year and other appropriate water surface elevations, etc.
- Water quality outlet plate details and material specifications (plate dimensions, perforation size, number of row and a number of columns)
- Water quality outlet plate anchoring detail
- Overflow grate dimensions, material, type, opening size, anchoring detail
- Well screen/trash rack dimensions, material, type, opening size, anchoring detail
- Wingwall layout and structural reinforcing details

Construction details of other features and components

- Cross section of access/maintenance road(s) or ramps with all-weather surface treatment (specify material type, thickness, slope and width)
- Emergency overflow spillway profile and cross section (weir elevation, weir length, riprap size, depth, dimensions, bedding material)
- Construction details for stormwater management facility signs
- Low flow/trickle channel construction details (cross section, material specification, slope)

TRANSPORTATION DESIGN AND CONSTRUCTION MANUAL – TEMPLATES

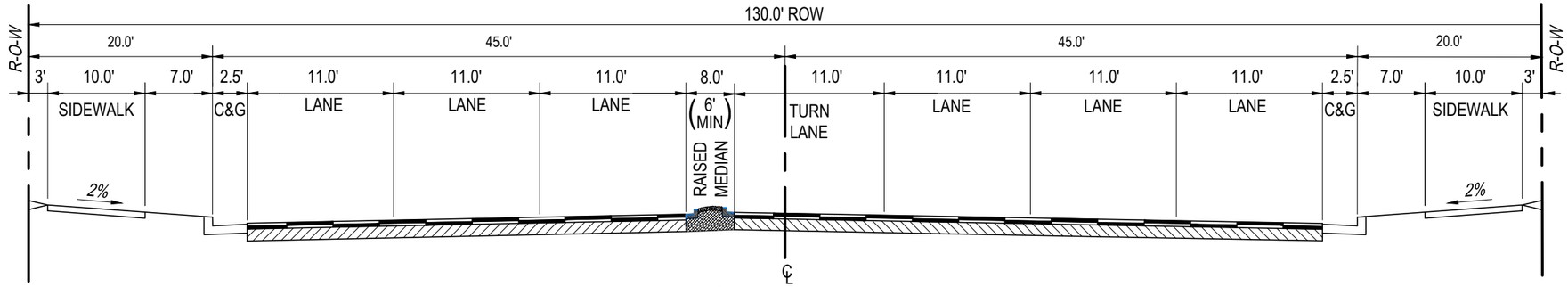

PRINCIPAL ARTERIAL

NOTES

1. THIS TEMPLATE SHALL BE USED WHERE THE DESIGN ADT IS GREATER THAN 25,000.
2. INTERSECTION DESIGN AND ACCESS POINTS SHALL BE APPROVED BY THE JEFFERSON COUNTY PLANNING & ZONING.
3. ACCELERATION/DECELERATION LANES AND/OR TURN LANES MAY BE REQUIRED AND MAY NECESSITATE ADDITIONAL RIGHT-OF-WAY. SEE SECTION 3.7.3.
4. MEDIANS MAY BE RAISED, DEPRESSED, OR PAINTED AS APPROVED BY THE JEFFERSON COUNTY PLANNING & ZONING. SEE STANDARD NO. 9 FOR TYPICAL MEDIAN DESIGNS.
5. LANE WIDTHS MAY BE REDUCED TO 10FT IN CERTAIN CONDITIONS IF APPROVED BY PLANNING & ZONING DIVISION.

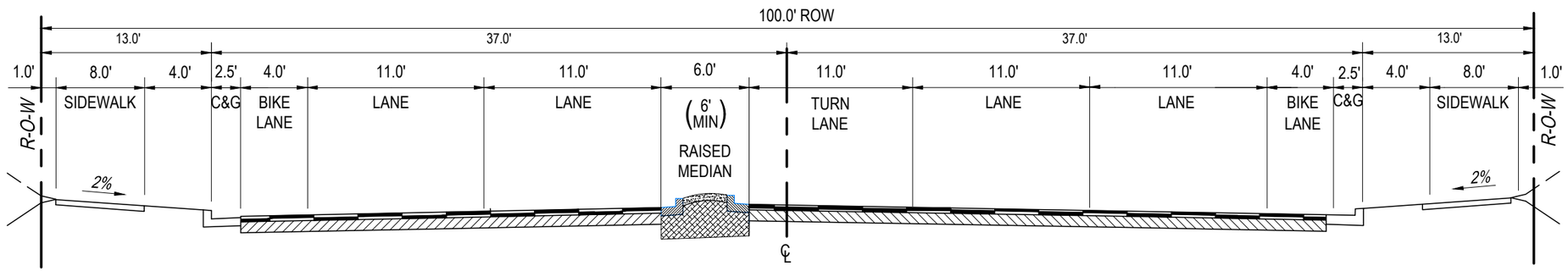

MINOR ARTERIAL

NOTES

1. THIS TEMPLATE SHALL BE USED WHERE THE DESIGN ADT IS GREATER THAN 15,000 BUT LESS THAN 25,000.
2. INTERSECTION DESIGN AND ACCESS POINTS SHALL BE APPROVED BY THE JEFFERSON COUNTY DEPARTMENT OF PLANNING & ZONING.
3. ACCELERATION/DECELERATION LANES AND/OR TURN LANES MAY BE REQUIRED AND MAY NECESSITATE ADDITIONAL RIGHT-OF-WAY. SEE SECTION 3.7.3.
4. MEDIANS MAY BE RAISED, DEPRESSED, OR PAINTED AS APPROVED BY THE JEFFERSON COUNTY PLANNING & ZONING. SEE STANDARD NO. 9 FOR TYPICAL MEDIAN DESIGNS.
5. BICYCLES LANES ARE REQUIRED FOR STREETS IDENTIFIED WITH THE DESIGNATION 'PROPOSED BIKE LANES' IN THE JEFFERSON COUNTY BICYCLE PLAN OR ANY SUBSEQUENT PLAN THAT HAS BEEN APPROVED BY THE BOARD OF COUNTY COMMISSIONERS.
6. SIDEWALKS MAY BE ATTACHED AS APPROVED BY JEFFERSON COUNTY PLANNING AND ZONING.
7. IF BICYCLE LANES ARE NOT REQUIRED, SIDEWALK WIDTHS SHALL BE 10 FEET.
8. IF BICYCLE LANE WIDTHS EXCEED 5 FEET, A 1.5 TO 3 FEET WIDE BUFFER SHALL BE INCLUDED
9. LANE WIDTHS MAY BE REDUCED TO 10 FEET IN CERTAIN CONDITIONS IF APPROVED BY PLANNING & ZONING DIVISION.

Revisions:	Designed By: STAFF	Scale: (As Shown)	
	Drawn By: SAK	Date Created:	
	Checked By: Staff	Plot Date: 1/14/25	F.I.R. Date:
	File: temp-1-2.dwg	F.O.R. Date:	For Const. Date:
	File Location: G:_CAD\Standards\2023 Road Standards & Templates\Templates (2023)		

JEFFERSON COUNTY COLORADO

DIVISION OF Transportation and Engineering
100 JEFFERSON COUNTY PARKWAY, SUITE 3500
GOLDEN, COLORADO 80419
(303) 271-8495

TEMPLATES 1 AND 2
PRINCIPAL & MINOR ARTERIAL

Project No.: ---- | Sheet 1 | Of 1

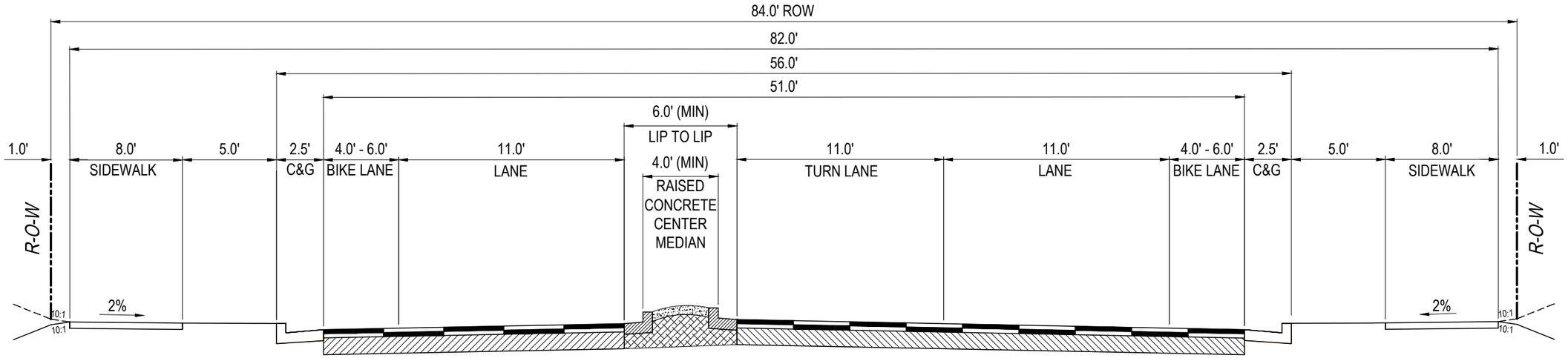

MAJOR COLLECTOR STREET

NOTES

1. THIS TEMPLATE SHALL BE USED WHERE THE DESIGN ADT IS GREATER THAN 8,000 BUT LESS THAN 15,000.
2. ACCESS POINTS SHALL BE APPROVED BY JEFFERSON COUNTY PLANNING & ZONING.
3. MEDIANS MAY BE RAISED, DEPRESSED, OR PAINTED AND WIDTH MAY VARY AS APPROVED BY JEFFERSON COUNTY PLANNING & ZONING. SEE STANDARD NO. 9 FOR TYPICAL MEDIAN DESIGNS.
4. VERTICAL CURB REQUIRED.
5. BICYCLES LANES ARE REQUIRED FOR STREETS IDENTIFIED WITH THE DESIGNATION 'PROPOSED BIKE LANES' IN THE JEFFERSON COUNTY BICYCLE PLAN OR ANY SUBSEQUENT PLAN THAT HAS BEEN APPROVED BY THE BOARD OF COUNTY COMMISSIONERS.
6. SIDEWALKS MAY BE ATTACHED AS APPROVED BY JEFFERSON COUNTY PLANNING & ZONING.
7. IF BICYCLE LANES ARE NOT REQUIRED, SIDEWALK WIDTHS SHALL BE 10 FEET.
8. IF BICYCLE LANE WIDTHS EXCEED 5 FEET, A 1.5 - 3 FOOT WIDE BUFFER SHALL BE INCLUDED.
9. LANE WIDTHS MAY BE REDUCED TO 10 FEET IN CERTAIN CONDITIONS IF APPROVED BY PLANNING & ZONING DIVISION.

Revisions:	Designed By: STAFF	Scale: (As Shown)	JEFFERSON COUNTY COLORADO — DIVISION OF Transportation and Engineering, 100 JEFFERSON COUNTY PARKWAY, SUITE 3500, GOLDEN, COLORADO 80419, (303) 271-8495
	Drawn By: SAK	Date Created:	TEMPLATE 3
	Checked By: Staff	Plot Date: 1/14/25 F.I.R. Date:	MAJOR COLLECTOR STREET
	File: temp-3.dwg	F.O.R. Date: For Const. Date:	Project No.: ---- Sheet 1 of 1
	File Location: G:_CAD\Standards\2023 Road Standards & Templates\Templates (2023)		

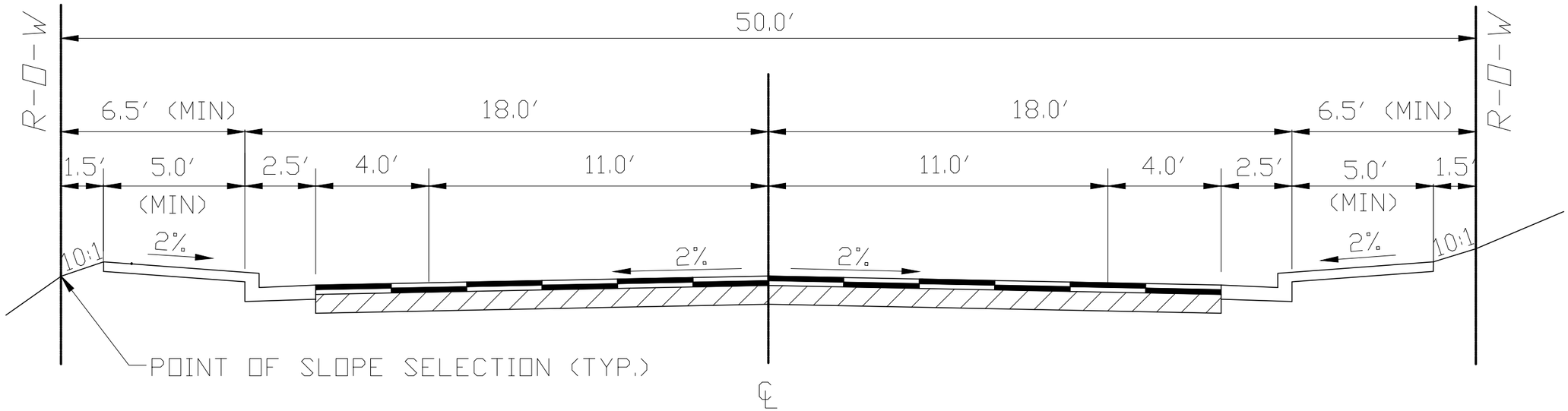

NOTES

1. THIS TEMPLATE SHALL BE USED WHERE THE DESIGN ADT IS GREATER THAN 1,000 BUT LESS THAN 8,000.

2. ACCESS POINTS SHALL BE APPROVED BY THE JEFFERSON COUNTY PLANNING & ZONING.

3. ADDITIONAL RIGHTS-OF-WAY/EASEMENTS MAY BE REQUIRED TO ACCOMMODATE ADDITIONAL PARKING, TURN LANES, CUT AND FILL SLOPES, DRAINAGE STRUCTURES AND MAINTENANCE.

4. BICYCLE LANES ARE REQUIRED FOR STREETS IDENTIFIED WITH THE DESIGNATION 'PROPOSED BIKE LANES' IN THE JEFFERSON COUNTY BICYCLE PLAN OR ANY SUBSEQUENT PLAN THAT HAS BEEN APPROVED BY THE BOARD OF COUNTY COMMISSIONERS.

5. IF BICYCLE LANE WIDTHS EXCEED 5 FEET, A 1.5-3 FOOT WIDE BUFFER SHALL BE INCLUDED.

6. LANE WIDTHS MAY BE REDUCED TO 10 FEET IN CERTAIN CONDITIONS IF APPROVED BY PLANNING & ZONING DIVISION.

Revisions:	Designed By: STAFF	Scale: (As Shown)	JEFFERSON COUNTY COLORADO — DIVISION OF Transportation and Engineering, 100 JEFFERSON COUNTY PARKWAY, SUITE 3500, GOLDEN, COLORADO 80419, (303) 271-8495
	Drawn By: SAK	Date Created:	TEMPLATE 4
	Checked By: Staff	Plot Date: 1/14/25 F.I.R. Date:	COLLECTOR STREET (36' FROM ℄ TO ℄) WITH ATTACHED SIDEWALKS
	File: temp-4.dwg	F.O.R. Date: For Const. Date:	Project No.: #### Sheet 1 of 1
	File Location: G:_CAD\Standards\2023 Road Standards & Templates\Templates (2023)		

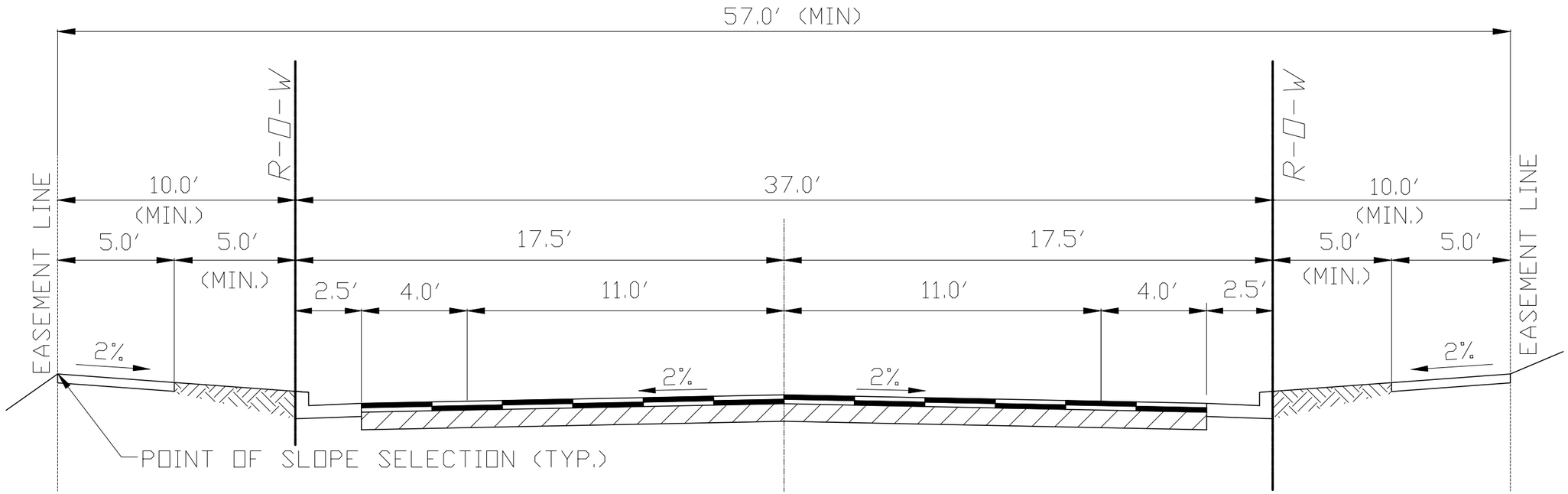

NOTES

1. THIS TEMPLATE SHALL BE USED WHERE THE DESIGN ADT IS GREATER THAN 1,000 BUT LESS THAN 8,000.
2. ACCESS POINTS SHALL BE APPROVED BY THE JEFFERSON COUNTY DEPARTMENT OF PLANNING & ZONING.
3. ADDITIONAL RIGHTS-OF-WAY/EASEMENTS MAY BE REQUIRED TO ACCOMMODATE ADDITIONAL PARKING, TURN LANES, CUT AND FILL SLOPES, DRAINAGE STRUCTURES AND MAINTENANCE.
4. SIDEWALK MAY MEANDER WITHIN EASEMENTS.
5. BICYCLE LANES ARE REQUIRED FOR STREETS IDENTIFIED WITH THE DESIGNATION 'PROPOSED BIKE LANES' IN THE JEFFERSON COUNTY BICYCLE PLAN OR ANY SUBSEQUENT PLAN THAT HAS BEEN APPROVED BY THE BOARD OF COUNTY COMMISSIONERS.
6. IF BICYCLE LANE WIDTHS EXCEED 5 FEET, A 1.5-3 FOOT WIDE BUFFER SHALL BE INCLUDED.
7. LANE WIDTHS MAY BE REDUCED TO 10 FEET IN CERTAIN CONDITIONS IF APPROVED BY PLANNING & ZONING DIVISION.

Revisions:	Designed By: STAFF	Scale: (As Shown)	JEFFERSON COUNTY COLORADO — DIVISION OF Transportation and Engineering, 100 JEFFERSON COUNTY PARKWAY, SUITE 3500, GOLDEN, COLORADO 80419, (303) 271-8495
	Drawn By: SAK	Date Created:	TEMPLATE 5
	Checked By: Staff	Plot Date: 1/14/25 F.I.R. Date:	COLLECTOR STREET (36' FROM ℄ TO ℄) WITH DETACHED SIDEWALKS
	File: temp-5.dwg	F.O.R. Date: For Const. Date:	Project No.: #### Sheet 7 of 8
	File Location: G:_CAD\Standards\2023 Road Standards & Templates\Templates (2023)		

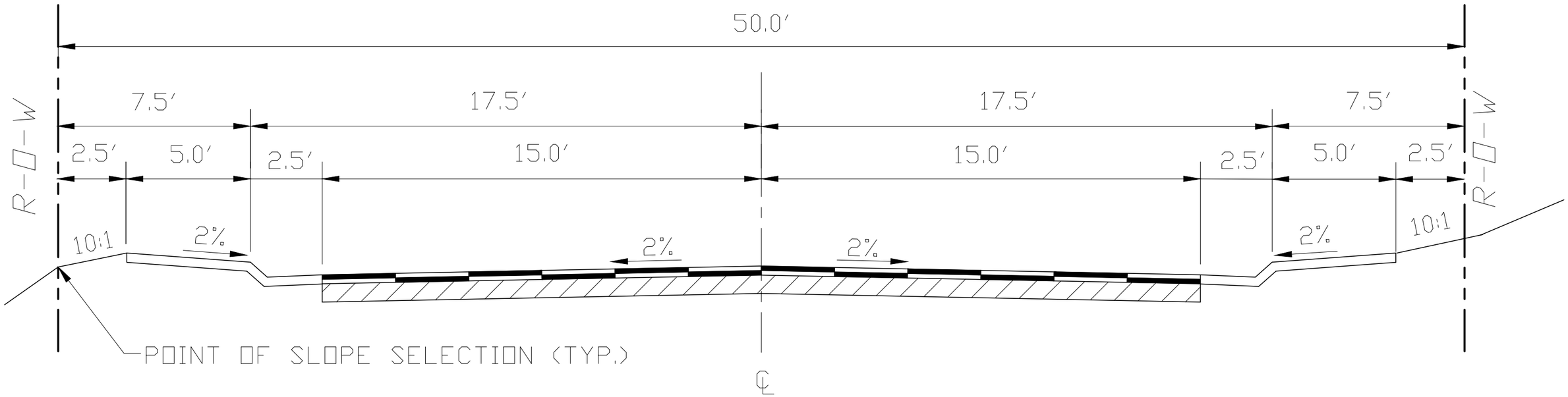

NOTES

1. THIS TEMPLATE SHALL BE USED WHERE THE DESIGN ADT IS LESS THAN 1,000.
2. ADDITIONAL RIGHTS-OF-WAY/EASEMENTS MAY BE REQUIRED FOR CUT AND FILL SLOPES, DRAINAGE STRUCTURES AND MAINTENANCE.
3. MOUNTABLE CURB ALLOWED.

Revisions:	Designed By: STAFF	Scale: (As Shown)	
	Drawn By: SAK	Date Created:	
	Checked By: Staff	Plot Date: 1/14/25	F.I.R. Date:
	File: temp-6.dwg	F.O.R. Date:	For Const. Date:
	File Location: G:_CAD\Standards\2023 Road Standards & Templates\Templates (2023)		

JEFFERSON COUNTY COLORADO

DIVISION OF
Transportation and Engineering
100 JEFFERSON COUNTY PARKWAY, SUITE 3500
GOLDEN, COLORADO 80419
(303) 271-8495

TEMPLATE 6
LOCAL STREET (34' FROM ℄ TO ℄) WITH ATTACHED SIDEWALKS

Project No.: #### Sheet 1 of 10

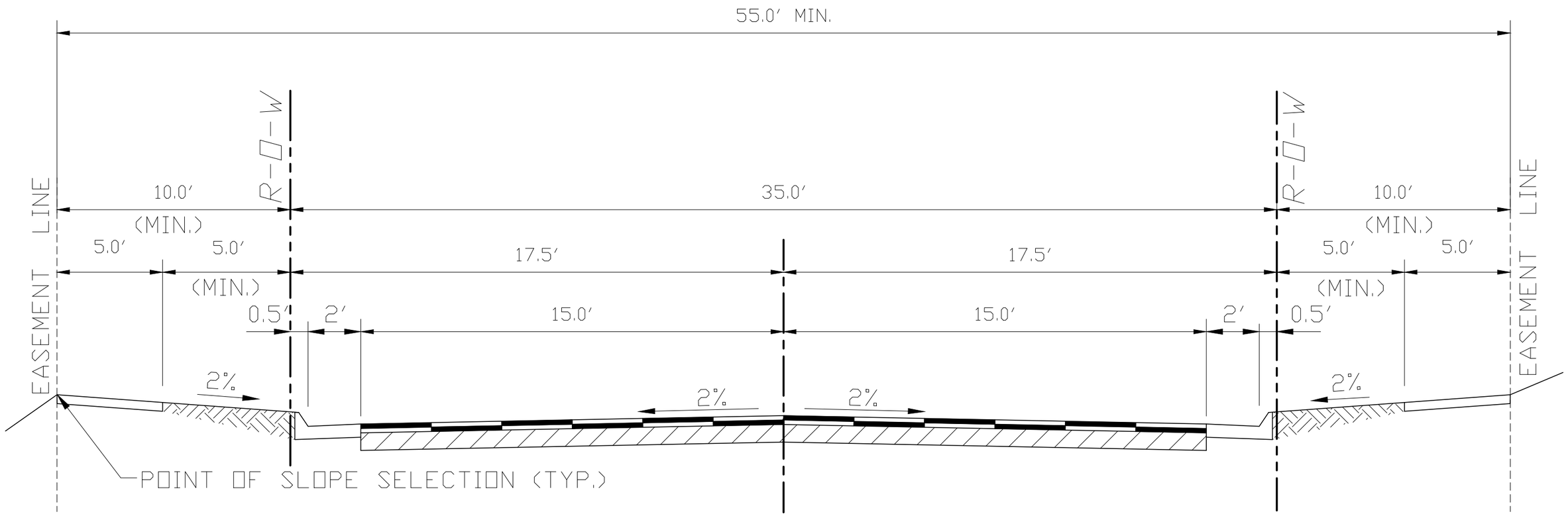

NOTES

1. THIS TEMPLATE SHALL BE USED WHERE THE DESIGN ADT IS LESS THAN 1,000.
2. ADDITIONAL RIGHTS-OF-WAY/EASEMENTS MAY BE REQUIRED FOR CUT AND FILL SLOPES, DRAINAGE STRUCTURES AND MAINTENANCE.
3. MOUNTABLE CURB ALLOWED.

Revisions:	Designed By: STAFF	Scale: (As Shown)	JEFFERSON COUNTY COLORADO — DIVISION OF Transportation and Engineering, 100 JEFFERSON COUNTY PARKWAY, SUITE 3500, GOLDEN, COLORADO 80419, (303) 271-8495
	Drawn By: SAK	Date Created:	TEMPLATE 7
	Checked By: Staff	Plot Date: 1/14/25 F.I.R. Date:	LOCAL STREET (34' FROM ℄ TO ℄) WITH DETACHED SIDEWALKS
	File: temp-7.dwg	F.O.R. Date: For Const. Date:	Project No.: #### Sheet 1 of 1
	File Location: G:_CAD\Standards\2023 Road Standards & Templates\Templates (2023)		

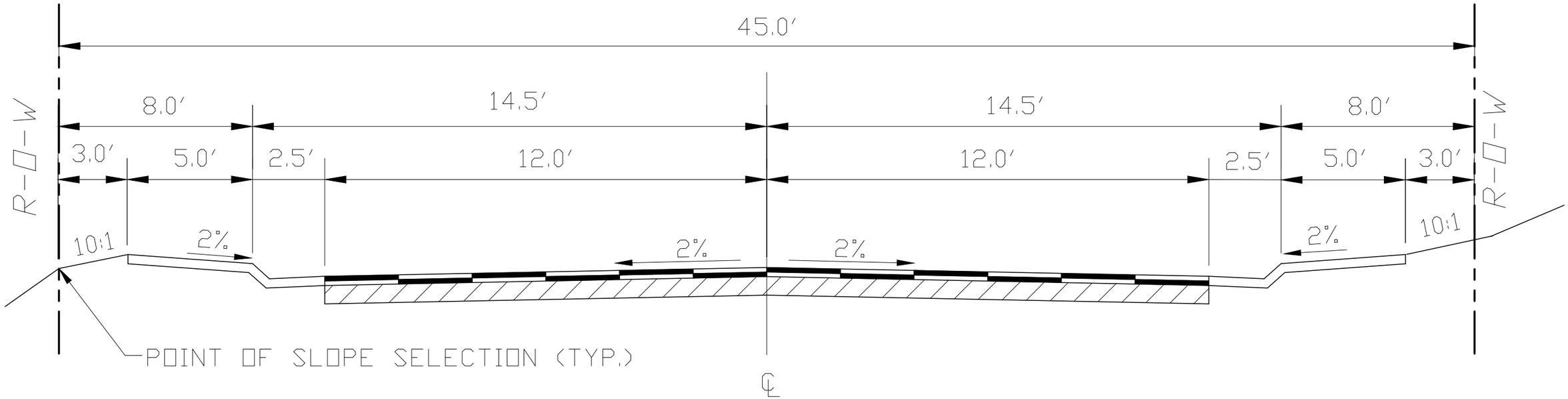

NOTES

1. THIS TEMPLATE MAY BE USED WHERE THE DESIGN ADT IS LESS THAN 350 SUBJECT TO APPROVAL BY PLANNING AND ZONING BASED ON SAFETY AND TRAFFIC OPERATIONS AND SPECIFIC SITE CONDITIONS.

2. A MINIMUM OF FOUR OFF-STREET PARKING SPACES PER DWELLING UNIT IS REQUIRED.

3. ADDITIONAL RIGHTS-OF-WAY/EASEMENTS MAY BE REQUIRED FOR CUT AND FILL SLOPES, DRAINAGE STRUCTURES AND MAINTENANCE.

4. ON STREET PARKING IS NOT PERMITTED.

5. MOUNTABLE CURB ALLOWED.

Revisions:	Designed By: STAFF	Scale: (As Shown)	JEFFERSON COUNTY COLORADO — DIVISION OF Transportation and Engineering, 100 JEFFERSON COUNTY PARKWAY, SUITE 3500, GOLDEN, COLORADO 80419, (303) 271-8495
	Drawn By: SAK	Date Created:	TEMPLATE 8
	Checked By: Staff	Plot Date: 1/14/25 F.I.R. Date:	LOCAL STREET (28' FROM ℄ TO ℄) WITH ATTACHED SIDEWALKS
	File: temp-8.dwg	F.O.R. Date: For Const. Date:	Project No.: #### Sheet 1 of
	File Location: G:_CAD\Standards\2023 Road Standards & Templates\Templates (2023)		

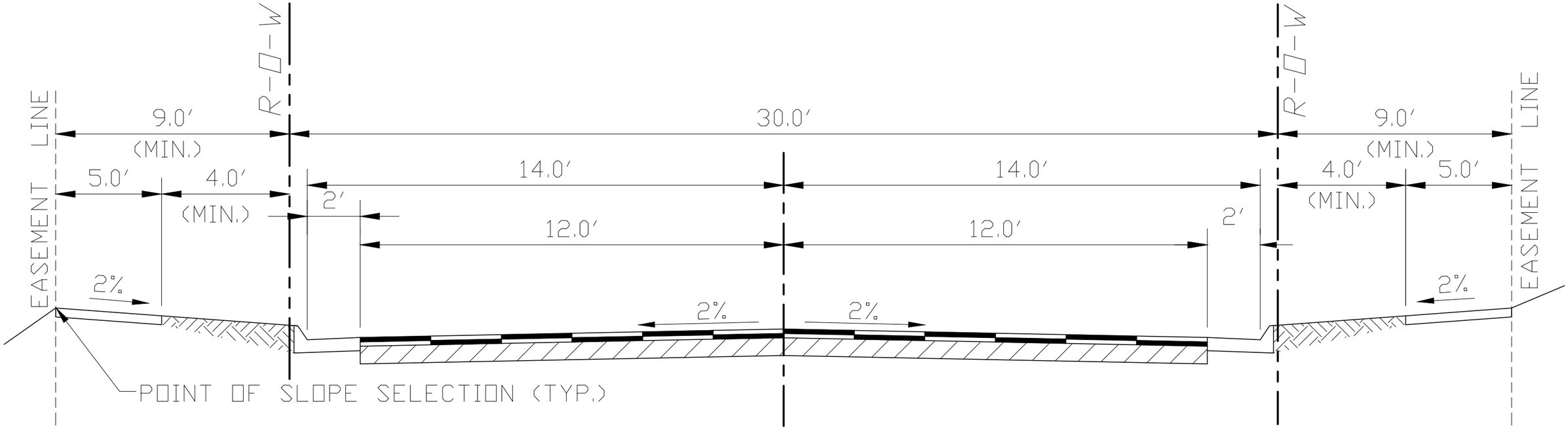

NOTES

1. THIS TEMPLATE MAY BE USED WHERE THE DESIGN ADT IS LESS THAN 350 SUBJECT TO APPROVAL BY PLANNING AND ZONING BASED ON SAFETY AND TRAFFIC OPERATIONS AND SPECIFIC SITE CONDITIONS.
2. A MINIMUM OF FOUR OFF-STREET PARKING SPACES PER DWELLING UNIT IS REQUIRED.
3. ADDITIONAL RIGHTS-OF-WAY/EASEMENTS MAY BE REQUIRED FOR CUT AND FILL SLOPES, DRAINAGE STRUCTURES AND MAINTENANCE.
4. ON STREET PARKING IS NOT PERMITTED.
5. VERTICAL CURB REQUIRED.

Revisions:	Designed By: STAFF	Scale: (As Shown)	
	Drawn By: SAK	Date Created:	
	Checked By: Staff	Plot Date: 1/14/25	F.I.R. Date:
	File: temp-9.dwg	F.O.R. Date:	For Const. Date:
	File Location: G:_CAD\Standards\2023 Road Standards & Templates\Templates (2023)		

JEFFERSON COUNTY COLORADO

DIVISION OF
Transportation and Engineering
100 JEFFERSON COUNTY PARKWAY, SUITE 3500
GOLDEN, COLORADO 80419
(303) 271-8495

TEMPLATE 9
LOCAL STREET (28' FROM ℄ TO ℄) WITH DETACHED SIDEWALKS

Project No.: #### Sheet 1 of 2

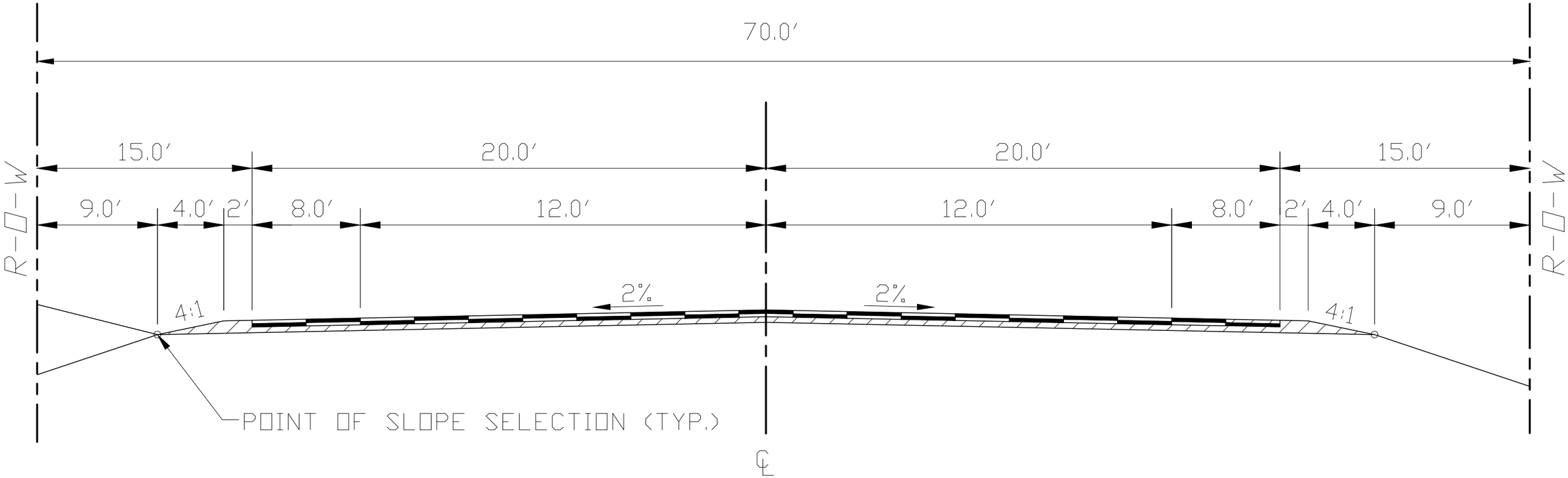

NOTES

1. THIS TEMPLATE SHALL BE USED WHERE THE DESIGN ADT IS GREATER THAN 8,000.

2. INTERSECTION DESIGN AND ACCESS POINTS SHALL BE APPROVED BY JEFFERSON COUNTY PLANNING & ZONING. ACCELERATION/DECELERATION, LEFT TURN AND/OR CLIMBING LANES MAY BE REQUIRED AND WILL NECESSITATE ADDITIONAL RIGHT-OF-WAY.

3. ADDITIONAL RIGHTS-OF-WAY/EASEMENTS MAY BE REQUIRED FOR CUT AND FILL SLOPES, DRAINAGE STRUCTURES AND MAINTENANCE.

4. GUARDRAIL MAY BE REQUIRED DEPENDING ON FILL SLOPE HEIGHT/SLOPE AND/OR PRESENCE OF OTHER HAZARDS. SEE SECTION 3.10.1.

Revisions:	Designed By: STAFF	Scale: (As Shown)	
	Drawn By: SAK	Date Created:	
	Checked By: Staff	Plot Date: 1/14/25	F.I.R. Date:
	File: temp-10.dwg	F.O.R. Date:	For Const. Date:
	File Location: G:_CAD\Standards\2023 Road Standards & Templates\Templates (2023)		

JEFFERSON COUNTY COLORADO

DIVISION OF
Transportation and Engineering
100 JEFFERSON COUNTY PARKWAY, SUITE 3500
GOLDEN, COLORADO 80419
(303) 271-8495

TEMPLATE 10
MINOR ARTERIAL ROAD

Project No.: –

Sheet 1 of 8

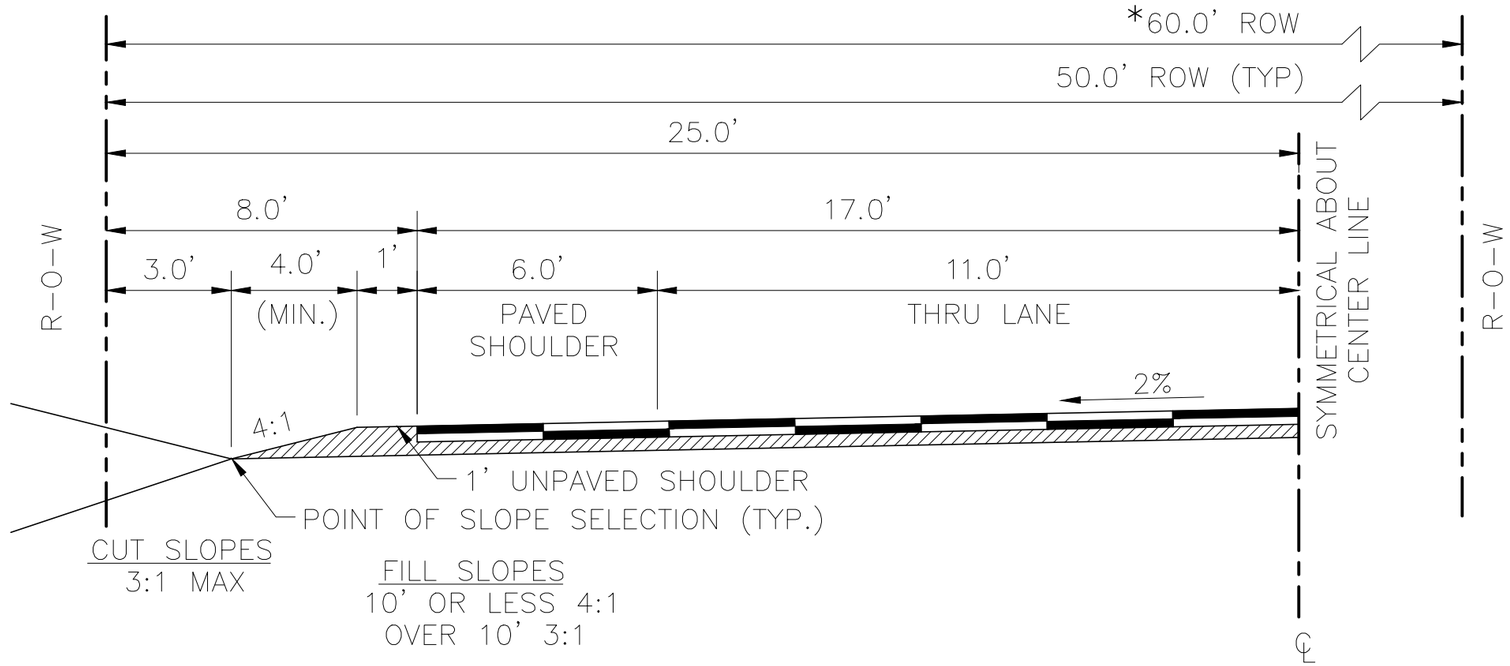

NOTES

1. THIS TEMPLATE SHALL BE USED WHERE THE DESIGN ADT IS GREATER THAN 2,000 BUT LESS THAN 8,000.

*2. INTERSECTION DESIGN AND ACCESS POINTS SHALL BE APPROVED BY JEFFERSON COUNTY PLANNING & ZONING. ACCELERATION/DECELERATION, LEFT TURN AND/OR CLIMBING LANES MAY BE REQUIRED AND WILL NECESSITATE ADDITIONAL RIGHT-OF-WAY.

3. ADDITIONAL RIGHTS-OF-WAY/EASEMENTS MAY BE REQUIRED FOR CUT AND FILL SLOPES, DRAINAGE STRUCTURES AND MAINTENANCE.

4. GUARDRAIL MAY BE REQUIRED DEPENDING ON FILL SLOPE HEIGHT/SLOPE AND/OR PRESENCE OF OTHER HAZARDS. SEE SECTION 3.10.1.

5. PAVED SHOULDER MAY BE REDUCED TO 4 FT. DUE TO THE EXISTENCE OF LIMITING FACTORS.

Revisions:	Designed By: STAFF	Scale: (As Shown)	JEFFERSON COUNTY COLORADO — DIVISION OF Transportation and Engineering, 100 JEFFERSON COUNTY PARKWAY, SUITE 3500, GOLDEN, COLORADO 80419, (303) 271-8495
	Drawn By: SAK	Date Created:	TEMPLATE 11
	Checked By: Staff	Plot Date: 1/14/25 F.I.R. Date:	MAJOR COLLECTOR ROAD
	File: temp-11.dwg	F.O.R. Date: For Const. Date:	Project No.: – Sheet 1 of 4
	File Location: G:_CAD\Standards\2023 Road Standards & Templates\Templates (2023)		

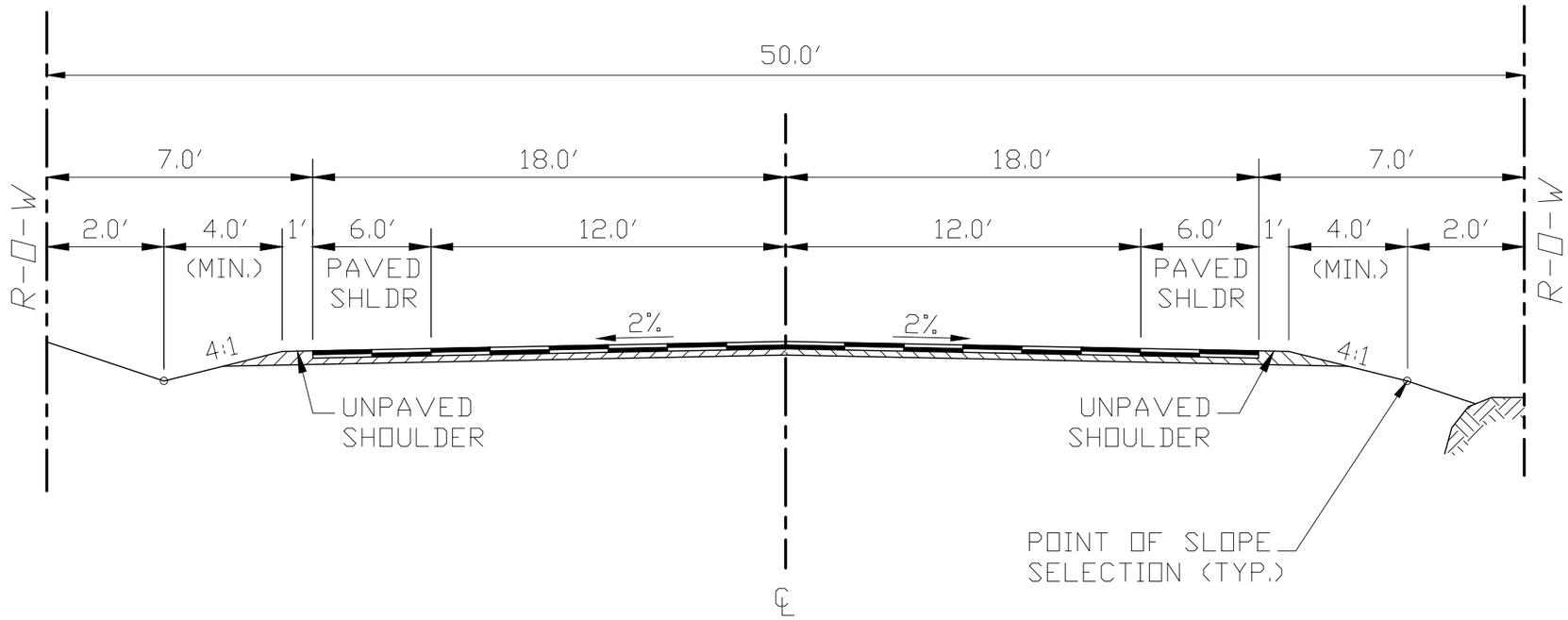

NOTES

1. THIS TEMPLATE SHALL BE USED WHERE THE DESIGN ADT IS GREATER THAN 1,000 BUT LESS THAN 2,000.
2. ACCESS POINTS SHALL BE APPROVED BY THE JEFFERSON COUNTY PLANNING & ZONING.
3. ADDITIONAL RIGHTS-OF-WAY/EASEMENTS MAY BE REQUIRED FOR CUT AND FILL SLOPES, DRAINAGE STRUCTURES AND MAINTENANCE.
4. GUARDRAIL MAY BE REQUIRED DEPENDING ON FILL SLOPE HEIGHT/SLOPE AND/OR PRESENCE OF OTHER HAZARDS. SEE SECTION 3.10.1.
5. PAVED SHOULDER MAY BE REDUCED TO 4 FT. DUE TO THE EXISTENCE OF LIMITING FACTORS.

Revisions:	Designed By: STAFF	Scale: (As Shown)	
	Drawn By: SAK	Date Created:	
	Checked By: Staff	Plot Date: 1/14/25	F.I.R. Date:
	File: temp-12.dwg	F.O.R. Date:	For Const. Date:
	File Location: G:_CAD\Standards\2023 Road Standards & Templates\Templates (2023)		

JEFFERSON COUNTY COLORADO

DIVISION OF
Transportation and Engineering
100 JEFFERSON COUNTY PARKWAY, SUITE 3500
GOLDEN, COLORADO 80419
(303) 271-8495

TEMPLATE 12
COLLECTOR ROAD

Project No.: –

Sheet 1 of 5

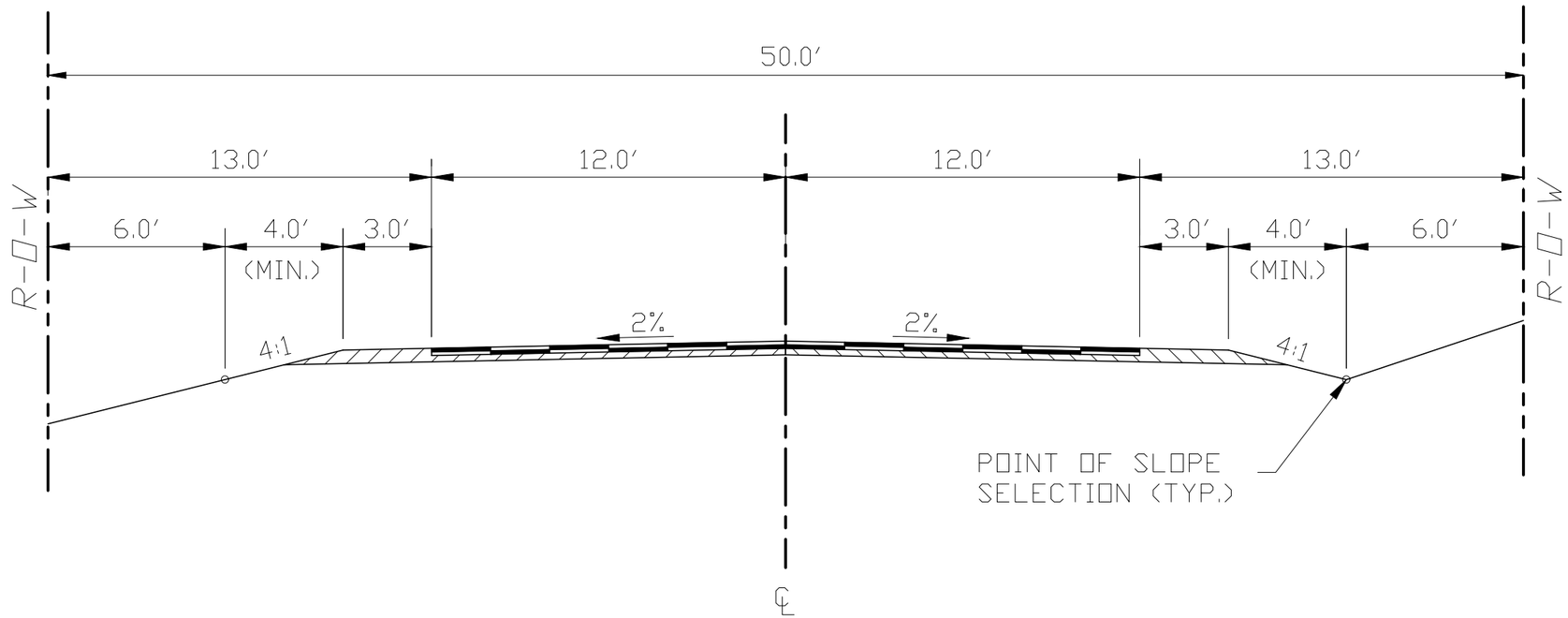

NOTES

1. THIS TEMPLATE SHALL BE USED WHERE THE DESIGN ADT IS LESS THAN 1,000.
2. ADDITIONAL RIGHTS-OF-WAY/EASEMENTS MAY BE REQUIRED FOR CUT AND FILL SLOPES, DRAINAGE STRUCTURES AND MAINTENANCE.
3. GUARDRAIL MAY BE REQUIRED DEPENDING ON FILL SLOPE HEIGHT/SLOPE AND/OR PRESENCE OF OTHER HAZARDS. SEE SECTION 3.10.1.

Revisions:	Designed By: STAFF	Scale: (As Shown)	JEFFERSON COUNTY COLORADO — DIVISION OF Transportation and Engineering, 100 JEFFERSON COUNTY PARKWAY, SUITE 3500, GOLDEN, COLORADO 80419, (303) 271-8495
	Drawn By: SAK	Date Created:	TEMPLATE 13
	Checked By: Staff	Plot Date: 1/14/25 F.I.R. Date:	LOCAL ROAD
	File: temp-13.dwg	F.O.R. Date: For Const. Date:	Project No.: – Sheet 1 of 6
	File Location: G:_CAD\Standards\2023 Road Standards & Templates\Templates (2023)		

OPTION 1

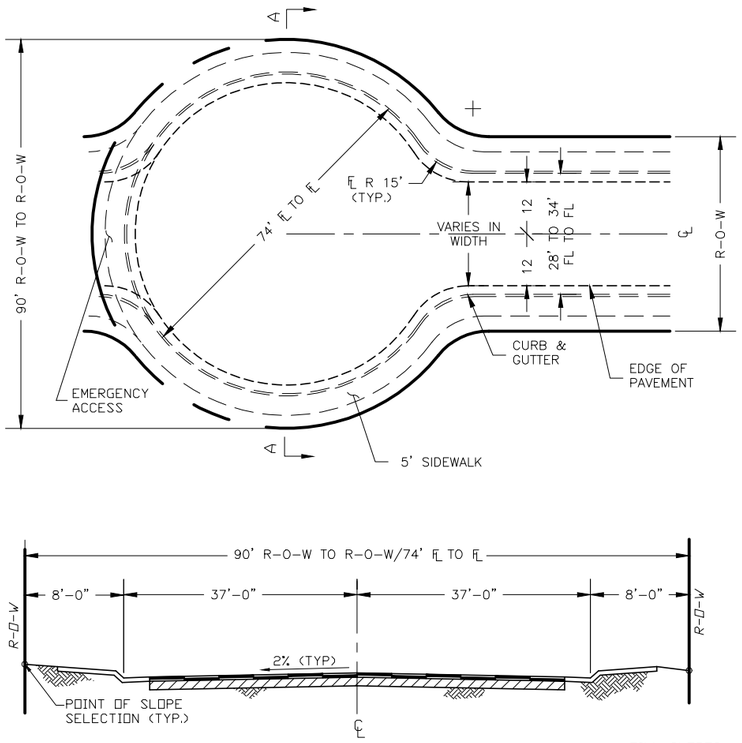

SECTION A – A
74' ℄ to ℄

NOTE:

1. SIDEWALK MAY BE DETACHED AS SHOWN ON TEMPLATES 7 AND 9
2. THE FLOWLINE TO FLOWLINE DISTANCE OF 74' AND ON-STREET PARKING IS ALLOWED IF THERE IS EMERGENCY ACCESS CONNECTED TO THE CUL-DE-SAC THAT IS ACCEPTABLE TO THE APPROPRIATE FIRE PROTECTION DISTRICT.

OPTION 2

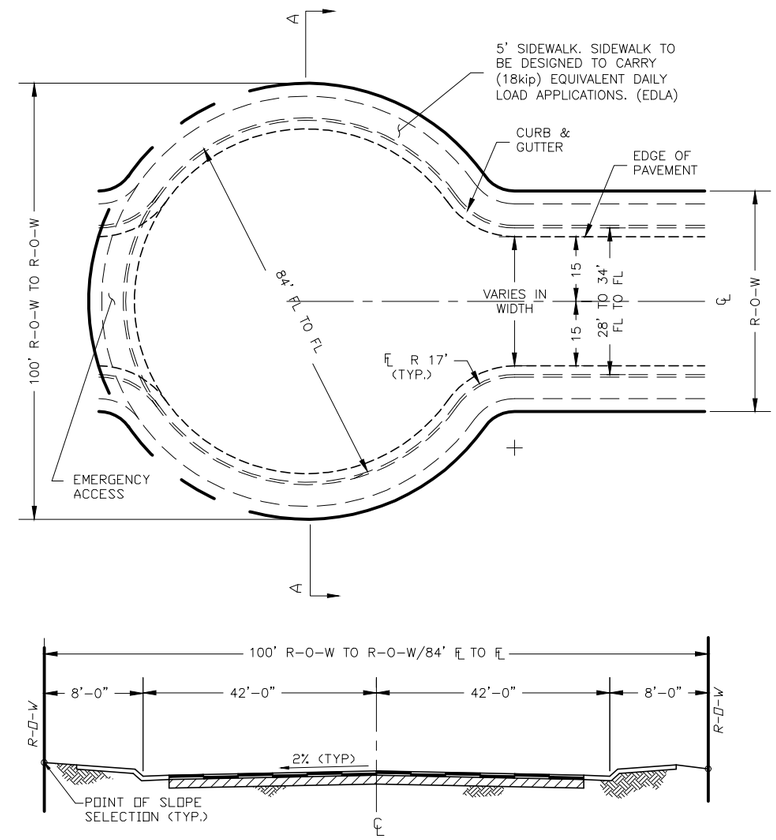

SECTION A – A
84' ℄ to ℄

NOTE:

1. SIDEWALK MAY BE DETACHED AS SHOWN ON TEMPLATES 7 AND 9
2. THE FLOWLINE TO FLOWLINE DISTANCE OF 84' AND ON-STREET PARKING IS ALLOWED IF THERE IS EMERGENCY ACCESS CONNECTED TO THE CUL-DE-SAC THAT IS ACCEPTABLE TO THE APPROPRIATE FIRE PROTECTION DISTRICT.
3. IF EMERGENCY ACCESS CONNECTION IS NOT PROVIDED, A MINIMUM OF FOUR OFF-STREET PARKING SPACES PER DWELLING UNIT IS REQUIRED AND ON STREET PARKING IS NOT PERMITTED. ATTACHED SIDEWALK IS REQUIRED.

NOTE: Other than option 1 shown hereon, alternate standards for cul-de-sacs shall be approved by the appropriate fire protection district.

OPTION 3

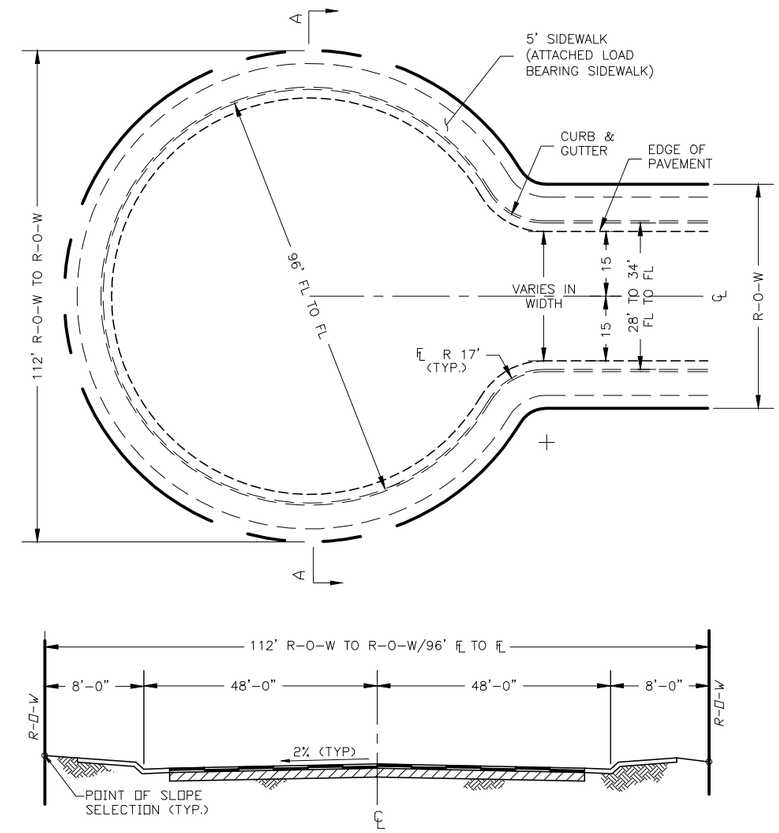

SECTION A – A
96' ℄ to ℄

NOTE:

1. SIDEWALK MAY BE DETACHED AS SHOWN ON TEMPLATES 7 AND 9
2. A MINIMUM OF FOUR OFF-SITE STREET PARKING SPACES PER DWELLING UNIT IS REQUIRED AND ON-STREET PARKING IS NOT PERMITTED.

Revisions:	Designed By: STAFF	Scale: (As Shown)	
	Drawn By: SAK	Date Created:	
	Checked By: Staff	Plot Date: 1/14/25	F.I.R. Date:
	File: temp-14.dwg	F.O.R. Date:	For Const. Date:
	File Location: G:_CAD\Standards\2023 Road Standards & Templates\Templates (2023)		

JEFFERSON COUNTY COLORADO

DIVISION OF Transportation and Engineering
100 JEFFERSON COUNTY PARKWAY, SUITE 3500
GOLDEN, COLORADO 80419
(303) 271-8495

TEMPLATE 14
STREET CUL-DE-SAC (OPTIONS 1-3)

Project No.: –
Sheet 7

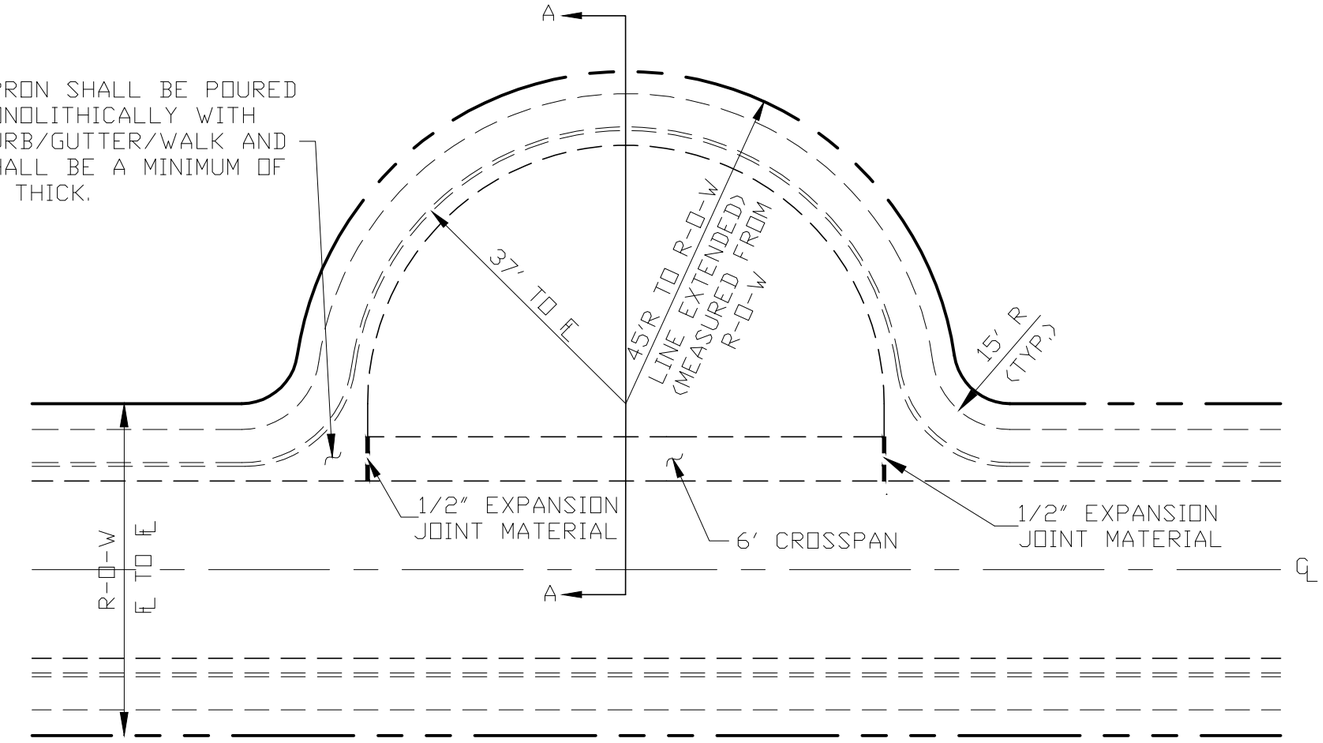

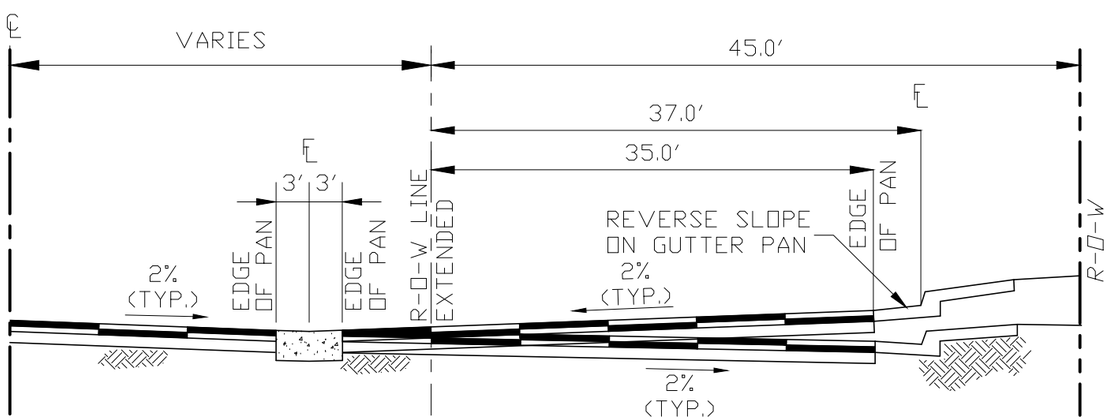

SECTION A – A

NOTE:

1. IF SUFFICIENT FALL IS AVAILABLE AROUND THE FLOWLINE OF THE PARTIAL CUL-DE-SAC (> 1%), THE CUL-DE-SAC MAY SLOPE AWAY FROM THE CROSSPAN. SHOW SPOT ELEVATIONS AND FLOW ARROWS ON THE CONSTRUCTION PLANS.
2. SEE STANDARD NO.10 FOR CONCRETE JOINT DETAILS.
3. SEE STANDARD NO.5 FOR CROSSPAN DETAIL.
4. SIDEWALK MAY BE DETACHED AS SHOWN ON TEMPLATES 7 AND 9

Revisions:	Designed By: STAFF	Scale: (As Shown)	
	Drawn By: SAK	Date Created:	
	Checked By: Staff	Plot Date: 1/14/25	F.I.R. Date:
	File: temp-15.dwg	F.O.R. Date:	For Const. Date:
	File Location: G:_CAD\Standards\2023 Road Standards & Templates\Templates (2023)		

JEFFERSON COUNTY COLORADO

DIVISION OF Transportation and Engineering
100 JEFFERSON COUNTY PARKWAY, SUITE 3500
GOLDEN, COLORADO 80419
(303) 271-8495

TEMPLATE 15
PARTIAL CUL-DE-SAC FOR LOCAL STREETS

Project No.: –
Sheet 1 of 1

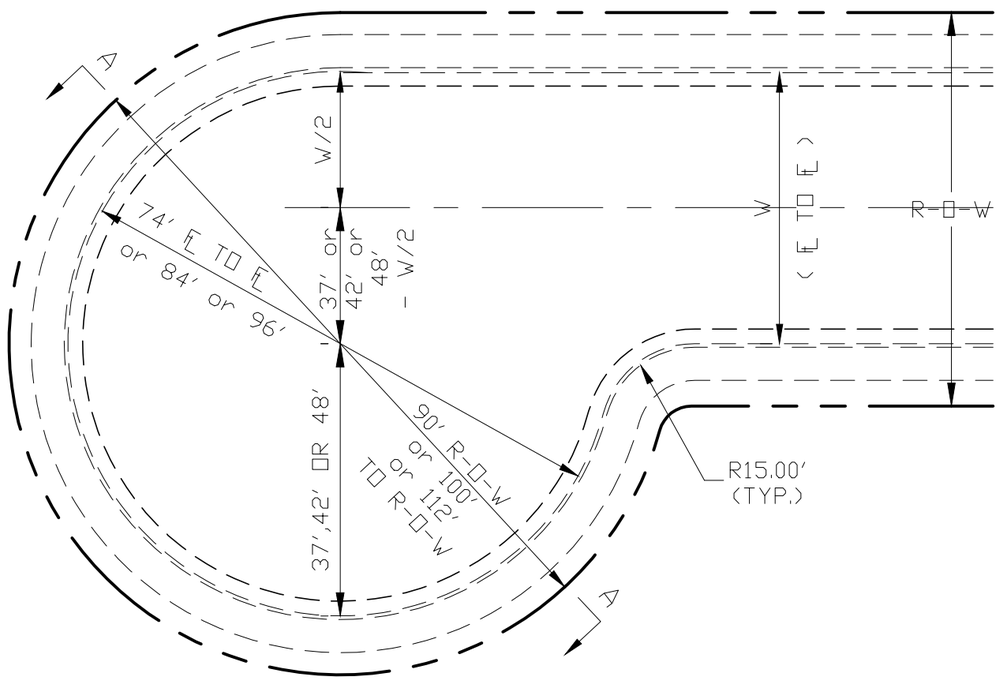

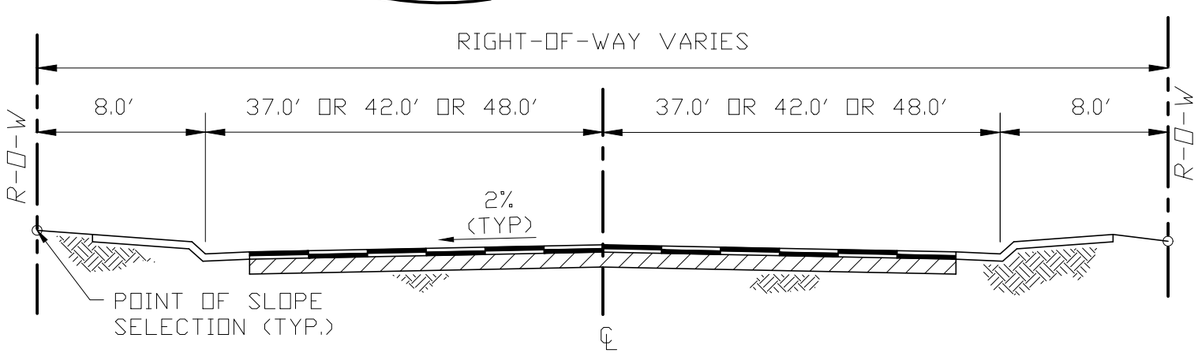

SECTION A – A

NOTES:

1. OFFSET CUL-DE-SAC FOR LOCAL ROADS SHALL BE BUILT ACCORDING TO THE SECTIONS SHOWN ON TEMPLATE NUMBER 16.
2. ALL DIMENSIONS SHALL BE SHOWN ON THE PLANS.
3. SIDEWALK MAY BE DETACHED AS SHOWN ON TEMPLATES 7 AND 9.
4. IF THE FLOWLINE TO FLOWLINE DISTANCE IS LESS THAN 96', A MINIMUM OF FOUR OFF-STREET PARKING SPACES PER DWELLING UNIT IS REQUIRED AND ONSTREET PARKING IS NOT PERMITTED.
5. THE FLOWLINE TO FLOWLINE DISTANCE OF 84' IS ALLOWED PROVIDED THE ATTACHED SIDEWALK HAS A LOAD BEARING CAPACITY THAT IS ACCEPTABLE TO THE APPROPRIATE FIRE PROTECTION DISTRICT.
6. THE FLOWLINE TO FLOWLINE DISTANCE OF 74' AND ON-STREET PARKING IS ALLOWED IF THERE IS EMERGENCY ACCESS CONNECTED TO THE CUL-DE-SAC THAT IS ACCEPTABLE TO THE APPROPRIATE FIRE PROTECTION DISTRICT.

Revisions:	Designed By: STAFF	Scale: (As Shown)	
	Drawn By: SAK	Date Created:	
	Checked By: Staff	Plot Date: 1/14/25	F.I.R. Date:
	File: temp-16.dwg	F.O.R. Date:	For Const. Date:
	File Location: G:_CAD\Standards\2023 Road Standards & Templates\Templates (2023)		

JEFFERSON COUNTY COLORADO

DIVISION OF
Transportation and Engineering
100 JEFFERSON COUNTY PARKWAY, SUITE 3500
GOLDEN, COLORADO 80419
(303) 271-8495

TEMPLATE 16
OFFSET CUL-DE-SAC FOR LOCAL STREETS

Project No.: –
Sheet -

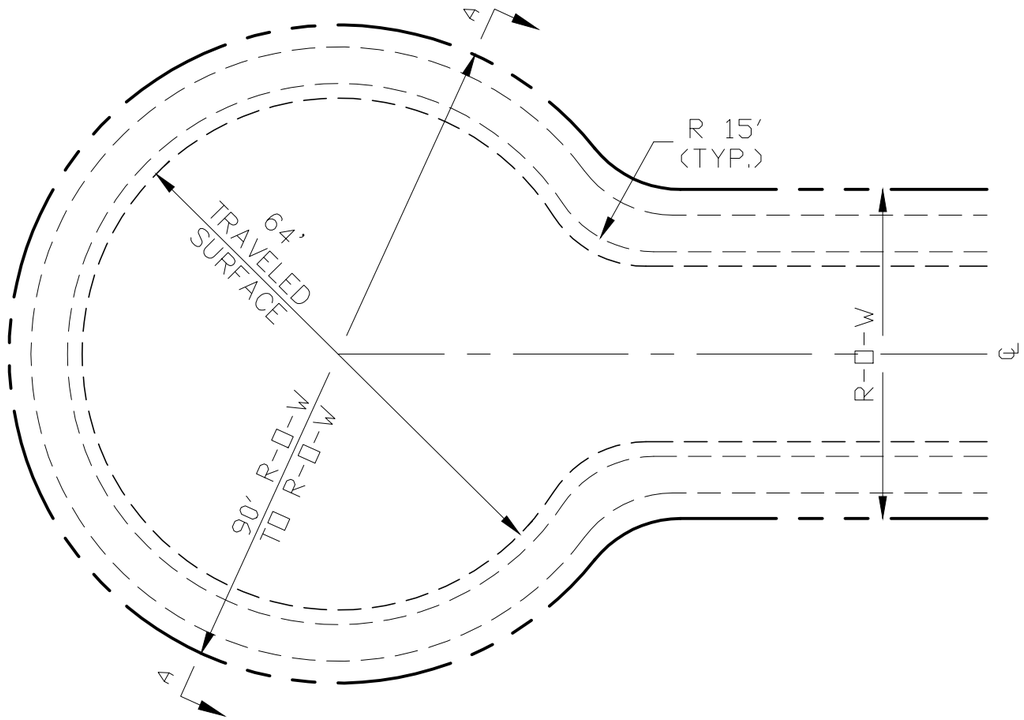

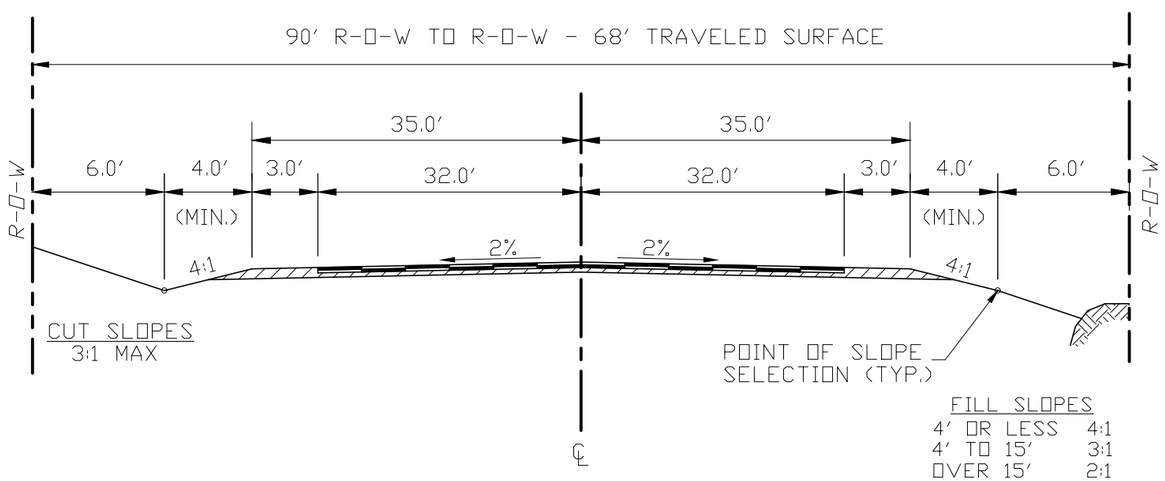

SECTION A – A

NOTE:

1. A MINIMUM OF FOUR OFF-STREET PARKING SPACES PER DWELLING UNIT IS REQUIRED AND ON ROAD PARKING IS NOT PERMITTED.

Revisions:	Designed By: STAFF	Scale: (As Shown)	
	Drawn By: SAK	Date Created:	
	Checked By: Staff	Plot Date: 1/14/25	F.I.R. Date:
	File: TEMP-17 [CUL-DE-SAC FOR LOCAL STREETS].dwg	F.O.R. Date:	For Const. Date:
	File Location: G:_CAD\Standards\2025 Road Standards & Templates\Templates (2025)\Drawings		

JEFFERSON COUNTY COLORADO

DIVISION OF
Transportation and Engineering
100 JEFFERSON COUNTY PARKWAY, SUITE 3500
GOLDEN, COLORADO 80419
(303) 271-8495

TEMPLATE 17
CUL-DE-SAC FOR LOCAL ROADS

Project No.: –
Sheet 1

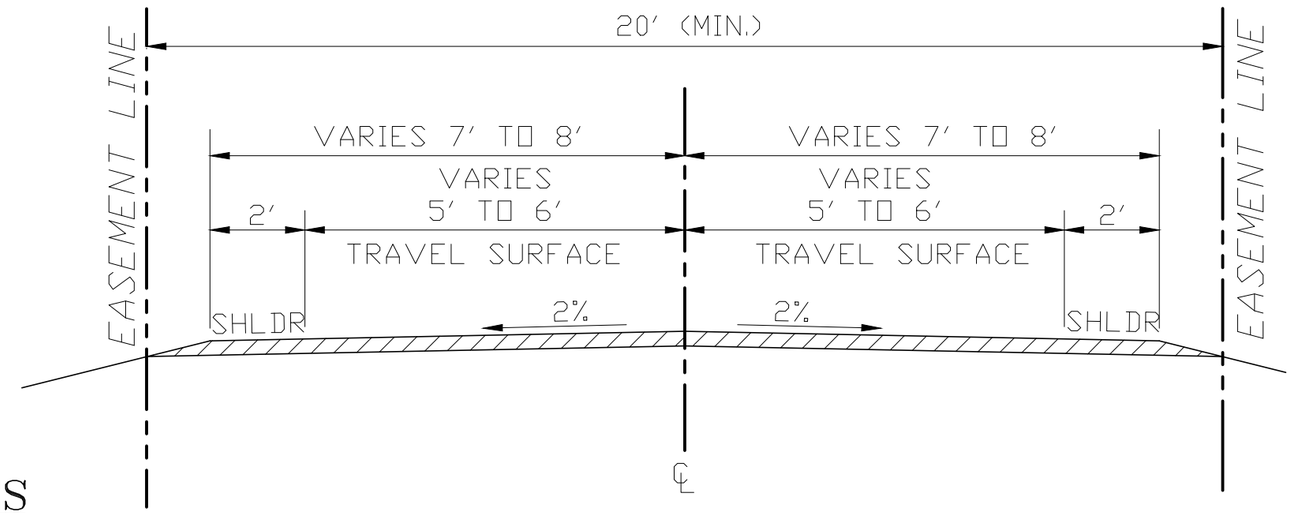

NOTES

1. ALL WEATHER SURFACE IS PERMITTED FOR DRIVEWAYS SUBJECT TO THE LAND DEVELOPMENT REGULATIONS. AN ALL WEATHER TRAVEL SURFACE IS DEFINED AS AN IMPROVED SURFACE THAT IS DESIGNED TO WITHSTAND ALL WEATHER CONDITIONS FOR TYPICAL ROAD USE AND ABLE TO SUPPORT EMERGENCY VEHICLES. THE SURFACE IS REQUIRED TO BE CONSTRUCTED OF CONCRETE, ASPHALT, RECYCLED ASPHALT OR A MINIMUM OF 6-INCHES OF CLASS 6 ROAD BASE.

2. ADDITIONAL EASEMENTS MAY BE REQUIRED FOR CUT AND FILL SLOPES, DRAINAGE STRUCTURES AND MAINTENANCE.

3. SEE SECTION 3.7.8 FOR ADDITIONAL DESIGN CRITERIA.

4. DRIVEWAYS LONGER THAN 150 FEET ARE REQUIRED TO HAVE 12 FOOT WIDE TRAVEL SURFACE WITH 2 FOOT WIDE SHOULDERS ON BOTH SIDES.

5. SUPER-ELEVATION ON DRIVEWAYS MAY BE ALLOWED FOR DRAINAGE PURPOSES AS APPROVED BY PLANNING AND ZONING.

Revisions:	Designed By: STAFF	Scale: (As Shown)	JEFFERSON COUNTY COLORADO — DIVISION OF Transportation and Engineering, 100 JEFFERSON COUNTY PARKWAY, SUITE 3500, GOLDEN, COLORADO 80419, (303) 271-8495
	Drawn By: SAK	Date Created:	TEMPLATE 18-A DRIVEWAYS
	Checked By: Staff	Plot Date: 1/14/25 F.I.R. Date:	
	File: temp-18.dwg	F.O.R. Date: For Const. Date:	Project No.: - Sheet 1
	File Location: G:_CAD\Standards\2023 Road Standards & Templates\Templates (2023)		

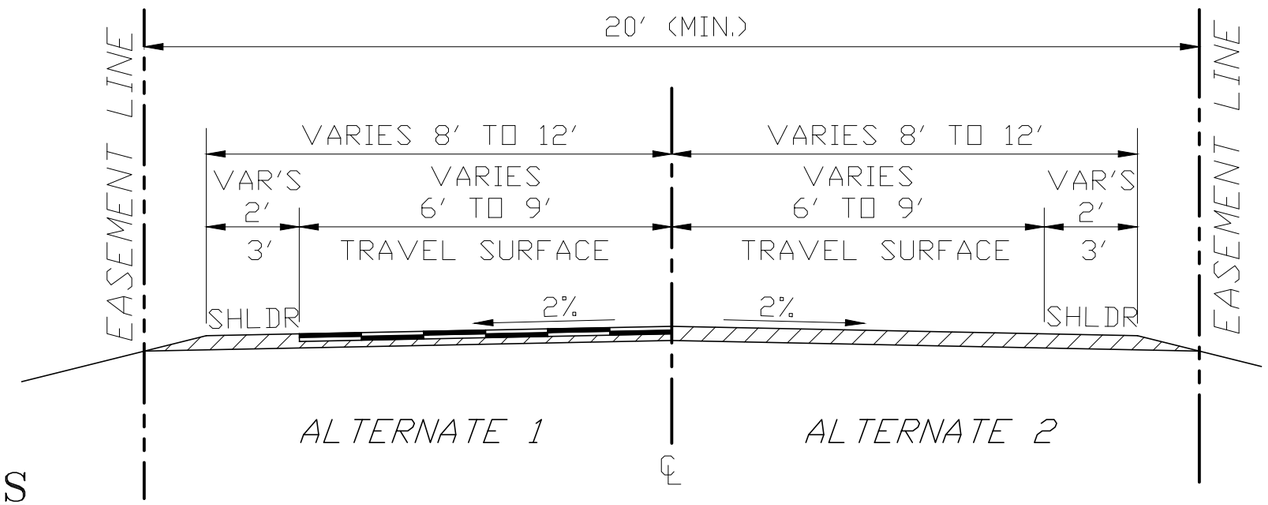

NOTES

1. ALTERNATE 1 (PAVED SURFACE) IS REQUIRED FOR PRIVATE ROADS SUBJECT TO THE LAND DEVELOPMENT REGULATIONS.

2. ALTERNATE 2 (ALL WEATHER SURFACE) IS PERMITTED FOR PRIVATE ROADS SUBJECT TO THE LAND DEVELOPMENT REGULATIONS. AN ALL WEATHER TRAVEL SURFACE IS DEFINED AS AN IMPROVED SURFACE THAT IS DESIGNED TO WITHSTAND ALL WEATHER CONDITIONS FOR TYPICAL ROAD USE AND ABLE TO SUPPORT EMERGENCY VEHICLES. THE SURFACE IS REQUIRED TO BE CONSTRUCTED OF CONCRETE, ASPHALT, RECYCLED ASPHALT OR A MINIMUM OF 6-INCHES OF CLASS 6 ROAD BASE.

3. ADDITIONAL EASEMENTS MAY BE REQUIRED FOR CUT AND FILL SLOPES, DRAINAGE STRUCTURES AND MAINTENANCE.

4. DITCHES ARE REQUIRED FOR PRIVATE ROADS SUBJECT TO THE LAND DEVELOPMENT REGULATION, AND THE TRANSPORTATION DESIGN AND CONSTRUCTION MANUAL.

5. SEE SECTION 3.7.8 FOR ADDITIONAL DESIGN CRITERIA.

6. ON ROAD PARKING IS NOT PERMITTED.

7. SUPER-ELEVATION ON PRIVATE ROADS MAY BE ALLOWED FOR DRAINAGE PURPOSES AS APPROVED BY PLANNING AND ZONING.

Revisions:	Designed By: STAFF	Scale: (As Shown)	
	Drawn By: SAK	Date Created:	
	Checked By: Staff	Plot Date: 1/14/25	F.I.R. Date:
	File: temp-18.dwg	F.O.R. Date:	For Const. Date:
	File Location: G:_CAD\Standards\2023 Road Standards & Templates\Templates (2023)		

JEFFERSON COUNTY COLORADO

DIVISION OF
Transportation and Engineering
100 JEFFERSON COUNTY PARKWAY, SUITE 3500
GOLDEN, COLORADO 80419
(303) 271-8495

TEMPLATE 18-B
PRIVATE ROADS

Project No.: –

Sheet 1 of 1

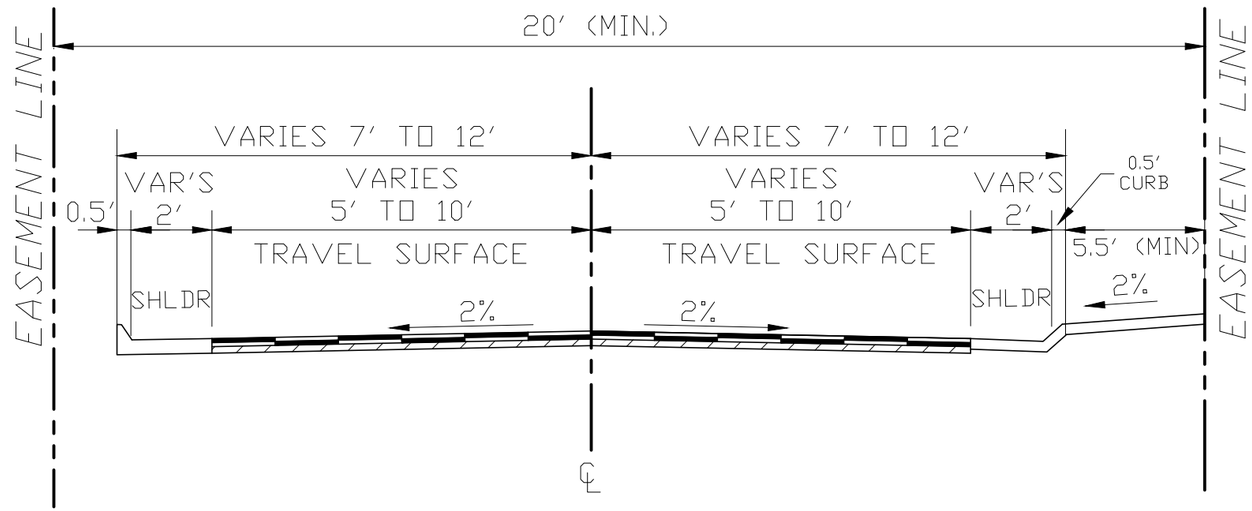

NOTES

1. PAVED SURFACE IS REQUIRED FOR PRIVATE STREETS SUBJECT TO THE LAND DEVELOPMENT REGULATIONS.

2. ADDITIONAL EASEMENTS MAY BE REQUIRED FOR CUT AND FILL SLOPES, DRAINAGE STRUCTURES AND MAINTENANCE.

3. CURB AND GUTTER AND SIDEWALKS ARE REQUIRED FOR PRIVATE STREETS SUBJECT TO THE LAND DEVELOPMENT REGULATION AND THE TRANSPORTATION DESIGN AND CONSTRUCTION MANUAL.

4. SEE SECTION 3.7.8 FOR ADDITIONAL DESIGN CRITERIA.

5. ON-STREET PARKING IS NOT PERMITTED. IF ON-STREET PARKING IS DESIRED, THE TEMPLATE MAY BE WIDENED AS APPROVED BY PLANNING AND ZONING AND THE APPROPRIATE FIRE PROTECTION DISTRICT.

6. SUPER-ELEVATION ON PRIVATE STREETS MAY BE ALLOWED FOR DRAINAGE PURPOSES AS APPROVED BY PLANNING AND ZONING.

Revisions:	Designed By: STAFF	Scale: (As Shown)	JEFFERSON COUNTY COLORADO — DIVISION OF Transportation and Engineering, 100 JEFFERSON COUNTY PARKWAY, SUITE 3500, GOLDEN, COLORADO 80419, (303) 271-8495
	Drawn By: SAK	Date Created:	TEMPLATE 18-C
	Checked By: Staff	Plot Date: 1/14/25 F.I.R. Date:	PRIVATE STREETS WITH CURB & GUTTER
	File: temp-18.dwg	F.O.R. Date: For Const. Date:	Project No.: – Sheet 7 of 7
	File Location: G:_CAD\Standards\2023 Road Standards & Templates\Templates (2023)		

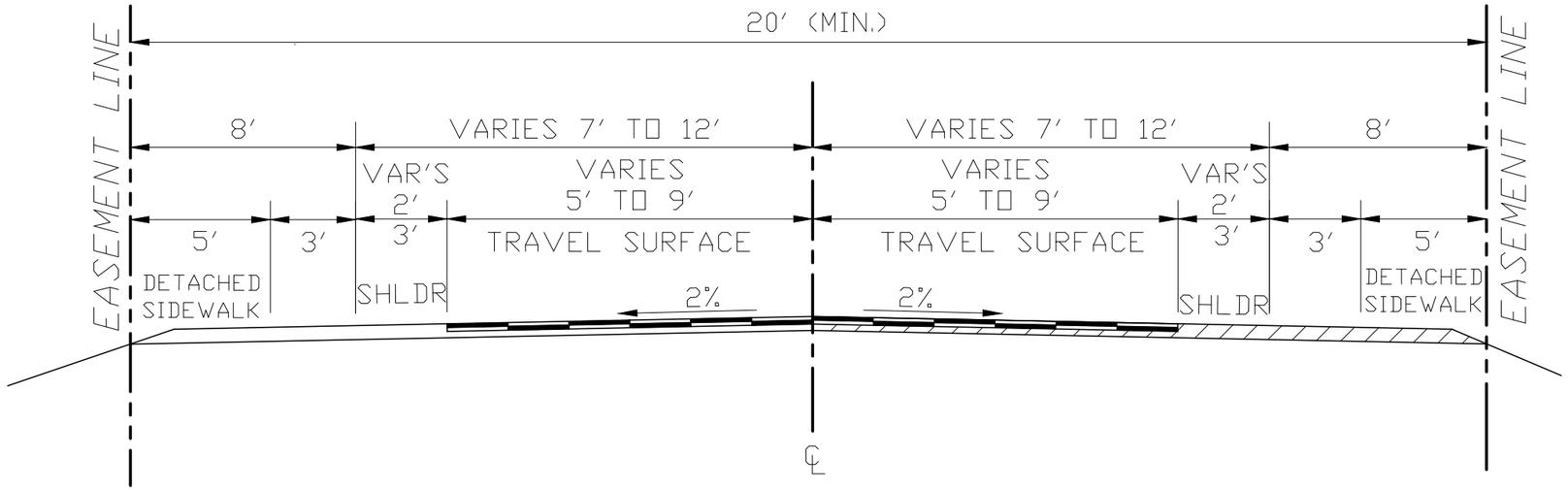

NOTES

1. PAVED SURFACE IS REQUIRED FOR PRIVATE STREETS SUBJECT TO THE LAND DEVELOPMENT REGULATIONS.

2. ADDITIONAL EASEMENTS MAY BE REQUIRED FOR CUT AND FILL SLOPES, DRAINAGE STRUCTURES AND MAINTENANCE.

3. DITCHES MAY BE PROVIDED FOR PRIVATE STREETS IN ACCORDANCE WITH THE LAND DEVELOPMENT REGULATION.

4. SEE SECTION 3.7.8 FOR ADDITIONAL DESIGN CRITERIA.

5. ON-STREET PARKING IS NOT PERMITTED. IF ON-STREET PARKING IS DESIRED, THE TEMPLATE MAY BE WIDENED AS APPROVED BY PLANNING AND ZONING AND THE APPROPRIATE FIRE PROTECTION DISTRICT.

6. SUPER-ELEVATION ON STREETS MAY BE ALLOWED FOR DRAINAGE PURPOSES AS APPROVED BY PLANNING AND ZONING.

7. SIDEWALKS ARE REQUIRED FOR PRIVATE STREETS SUBJECT TO THE LAND DEVELOPMENT REGULATION AND THE TRANSPORTATION DESIGN AND CONSTRUCTION MANUAL.

Revisions:	Designed By: STAFF	Scale: (As Shown)	JEFFERSON COUNTY COLORADO — DIVISION OF Transportation and Engineering, 100 JEFFERSON COUNTY PARKWAY, SUITE 3500, GOLDEN, COLORADO 80419, (303) 271-8495
	Drawn By: SAK	Date Created:	TEMPLATE 18-D
	Checked By: Staff	Plot Date: 1/14/25 F.I.R. Date:	PRIVATE STREETS WITH STREETSIDE DITCH
	File: temp-18.dwg	F.O.R. Date: For Const. Date:	Project No.: – Sheet 1
	File Location: G:_CAD\Standards\2023 Road Standards & Templates\Templates (2023)		

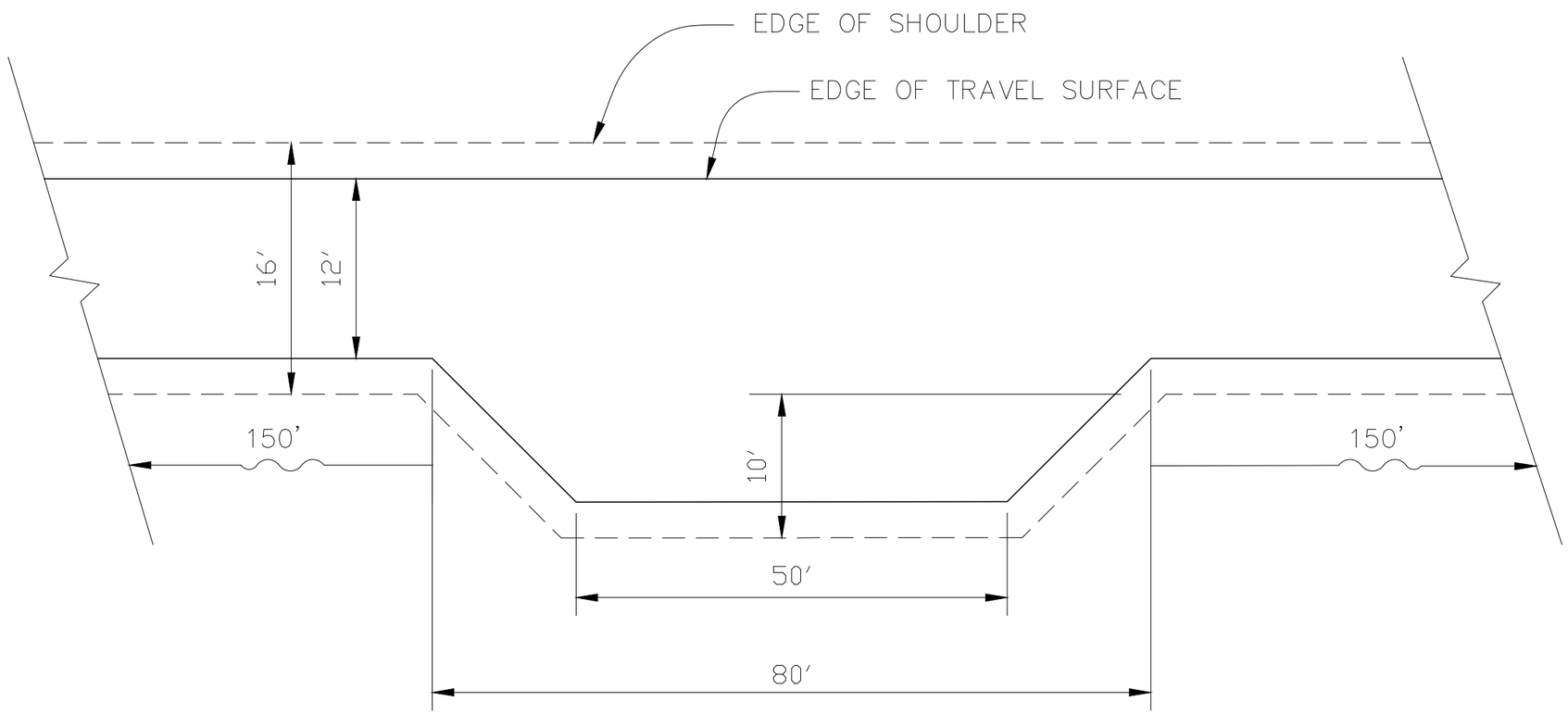

Revisions:	Designed By: STAFF	Scale: (As Shown)	
	Drawn By: SAK	Date Created:	
	Checked By: Staff	Plot Date: 1/14/25	F.I.R. Date:
	File: temp-19.dwg	F.O.R. Date:	For Const. Date:
	File Location: G:_CAD\Standards\2023 Road Standards & Templates\Templates (2023)		

JEFFERSON COUNTY COLORADO

DIVISION OF
Transportation and Engineering
100 JEFFERSON COUNTY PARKWAY, SUITE 3500
GOLDEN, COLORADO 80419
(303) 271-8495

TEMPLATE 19
PULL OUT FOR PRIVATE ROAD

Project No.: –

Sheet 1 of 1

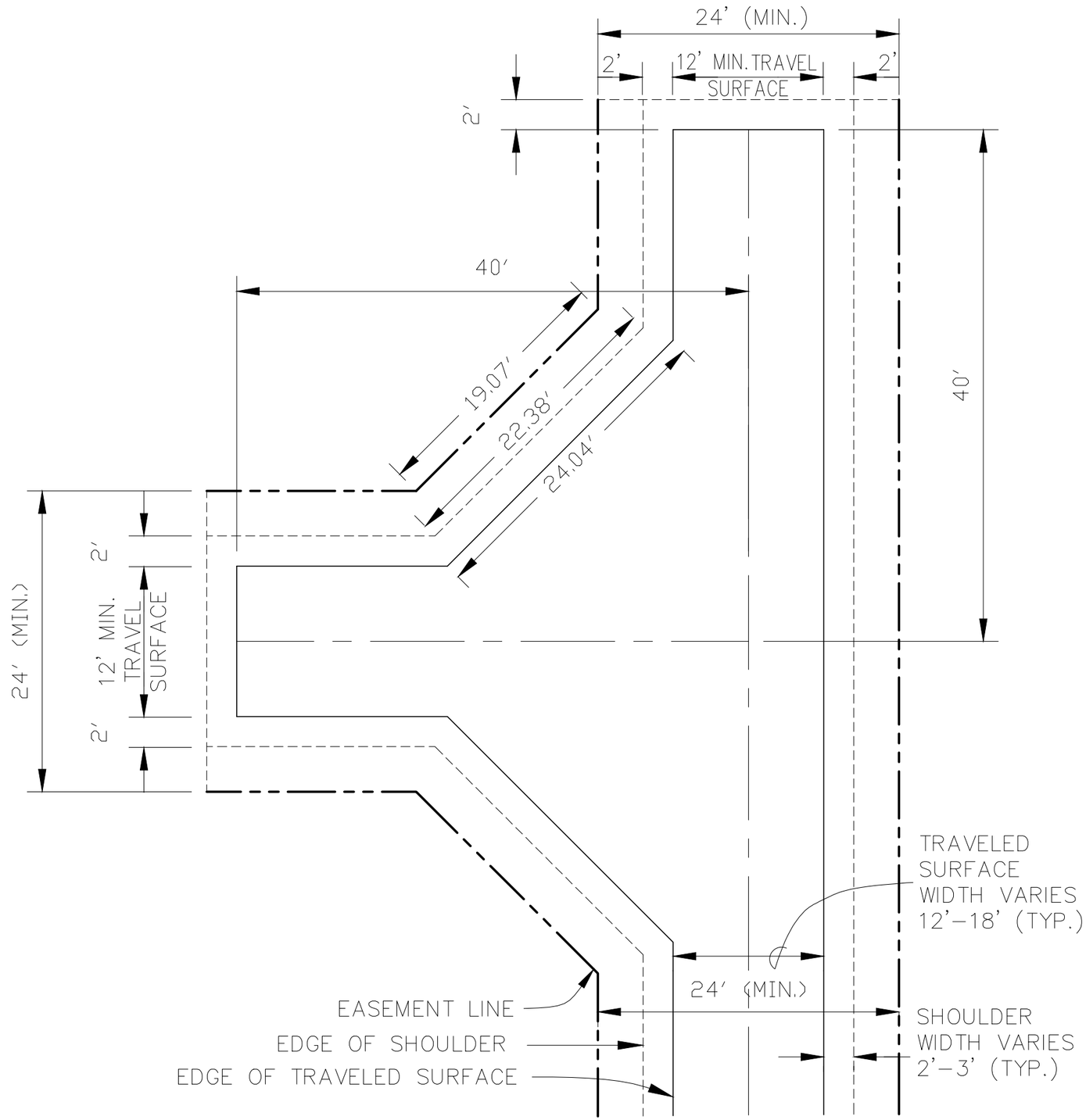

NOTE:

1. SEE SECTION 3.7.8 FOR DESIGN CRITERIA.
2. A COMPUTER GENERATED TURN STUDY USING THE LOCAL FIRE DISTRICT APPARATUS SPECIFICATIONS MAY BE REQUIRED TO DEMONSTRATE THAT FIRE APPARATUS CAN NEGOTIATE A PROPOSED TURNAROUND.

Revisions:	Designed By: STAFF	Scale: (As Shown)	
	Drawn By: SAK	Date Created:	
	Checked By: Staff	Plot Date: 1/14/25 F.I.R. Date:	
	File: temp-20.dwg	F.O.R. Date: For Const. Date:	
	File Location: G:_CAD\Standards\2023 Road Standards & Templates\Templates (2023)		

JEFFERSON COUNTY COLORADO

DIVISION OF Transportation and Engineering
100 JEFFERSON COUNTY PARKWAY, SUITE 3500
GOLDEN, COLORADO 80419
(303) 271-8495

TEMPLATE 20

HAMMERHEAD TURNAROUND FOR DRIVEWAYS/PRIVATE ROADS

Project No.: – Sheet -

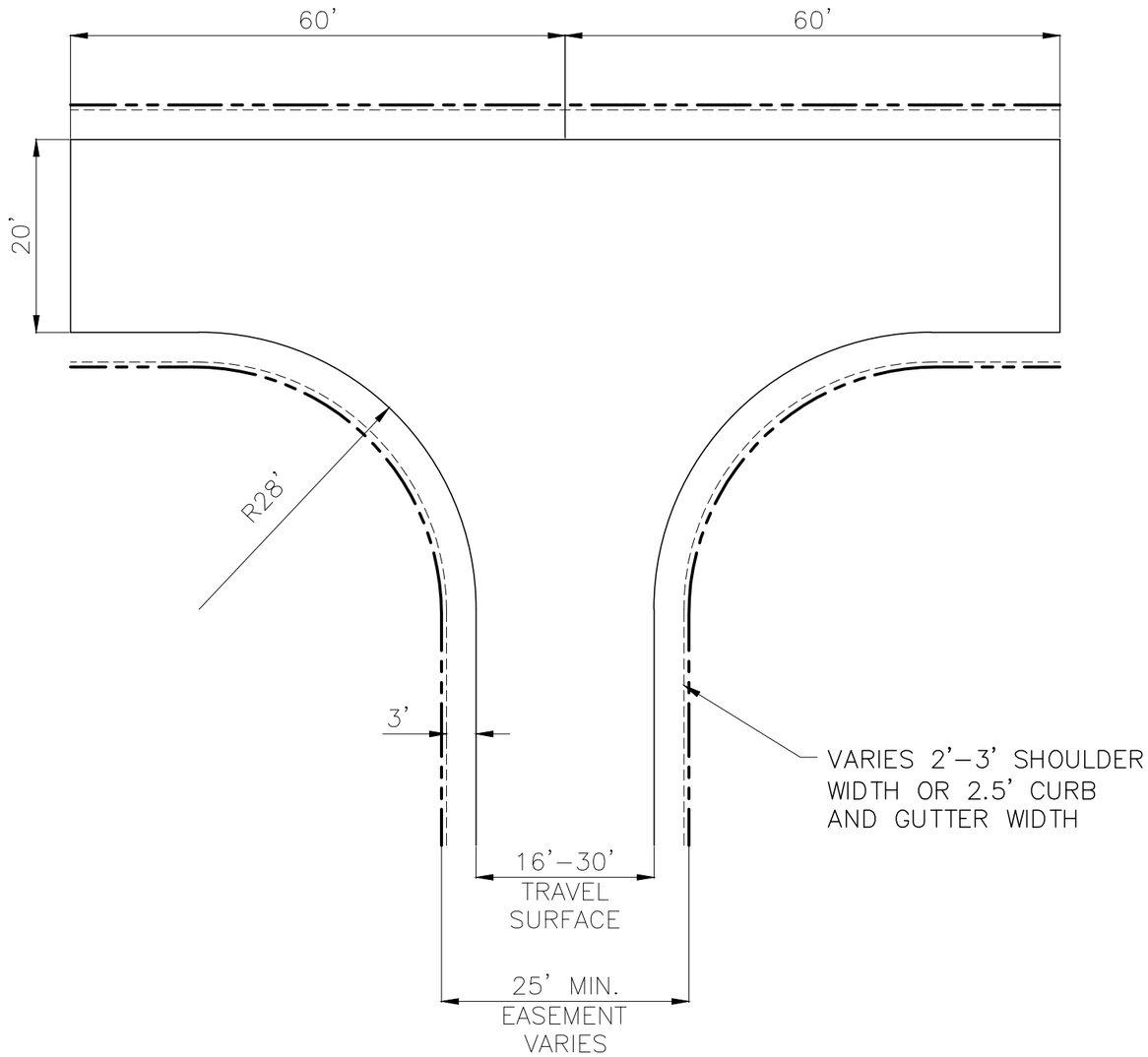

120 FOOT HAMMERHEAD

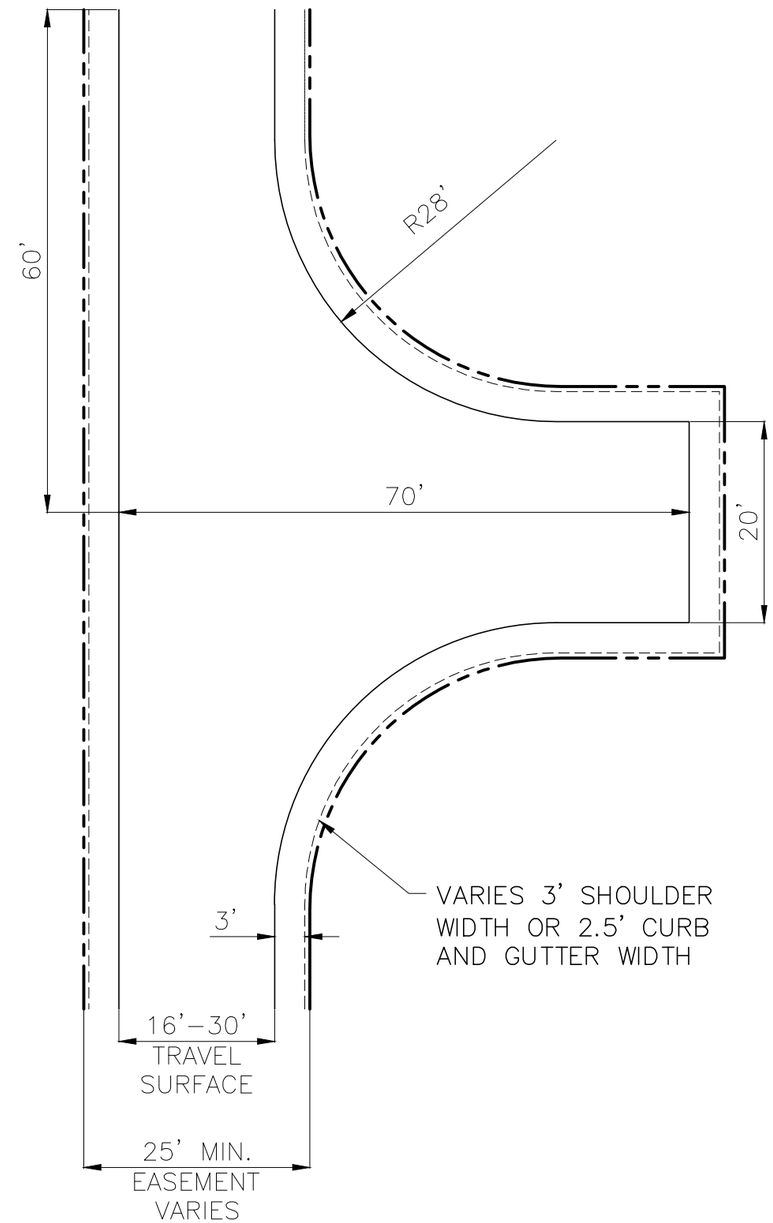

ACCEPTABLE ALTERNATIVE
TO 120-FOOT HAMMERHEAD

NOTE:

1. A COMPUTER GENERATED TURN STUDY USING THE LOCAL FIRE DISTRICT APPARATUS SPECIFICATIONS MAY BE REQUIRED TO DEMONSTRATE THAT FIRE APPARATUS CAN NEGOTIATE A PROPOSED TURNAROUND.

Revisions:	Designed By: STAFF	Scale: (As Shown)	JEFFERSON COUNTY COLORADO — DIVISION OF Transportation and Engineering, 100 JEFFERSON COUNTY PARKWAY, SUITE 3500, GOLDEN, COLORADO 80419, (303) 271-8495
	Drawn By: SAK	Date Created:	TEMPLATE 21
	Checked By: Staff	Plot Date: 1/14/25 F.I.R. Date:	HAMMERHEAD TURNAROUND FOR DRIVEWAYS/PRIVATE STREET
	File: TEMP-21 [HAMMERHEAD TURNAROUND FOR PRIVATE STREETS].dwg	For Const. Date:	Project No.: – Sheet -
	File Location: G:_CAD\Standards\2025 Road Standards & Templates\Templates (2025)\Drawings		

TRANSPORTATION DESIGN AND CONSTRUCTION MANUAL – STANDARDS

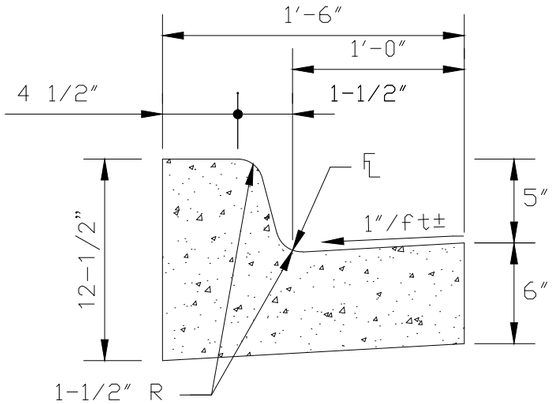

* 6" VERTICAL CURB WITH 1' GUTTER IS REQUIRED FOR ALL RAISED MEDIANS.

6" VERTICAL CURB WITH 1' GUTTER

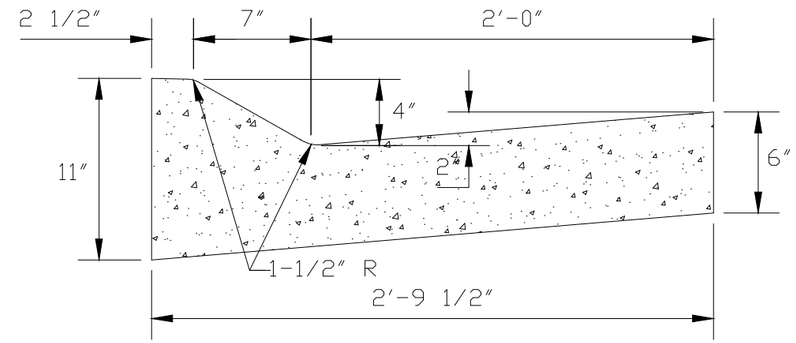

* SEE STANDARD NO. 10 FOR CONCRETE JOINT DETAILS

* ANY CURB TRANSITION FROM COMBINATION CURB, GUTTER AND SIDEWALK TO 6" VERTICAL CURB AND GUTTER SHALL TAKE PLACE IN A MINIMUM OF 12 FEET.

* COMBINATION CURB, GUTTER, AND SIDEWALK IS REQUIRED FOR LOCAL STREETS.

MOUNTABLE CURB & GUTTER

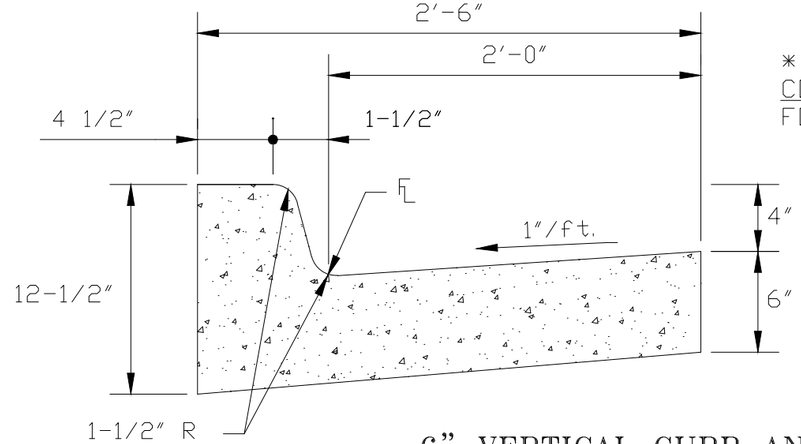

* SEE STANDARD NO. 10 FOR CONCRETE JOINT DETAILS FOR ALL CURB AND GUTTER.

6" VERTICAL CURB AND GUTTER

FOR 1' SPILL CURB : REFERENCE CDOT "M-609-1 CURB, GUTTERS, AND SIDEWALKS". USE CURB AND GUTTER TYPE 2 (SECTION IB)

Revisions:	Designed By: SAK	Scale: (As Shown)	JEFFERSON COUNTY COLORADO — DIVISION OF Transportation and Engineering, 100 JEFFERSON COUNTY PARKWAY, SUITE 3500, GOLDEN, COLORADO 80419, (303) 271-8495
	Drawn By: SAK	Date Created:	STANDARD 1 CURB & GUTTER
	Checked By: Staff	Plot Date: 1/13/2025 F.I.R. Date:	Project No.: – Sheet - Of -
	File: STND-1.DWG	F.O.R. Date: For Const. Date:	
	File Location: G:_CAD\Standards\2023 Road Standards & Templates\Standards (2023)\Drawings\T&E Manual Standards		

STANDARD 2 COMBINATION CURB, GUTTER AND SIDEWALK

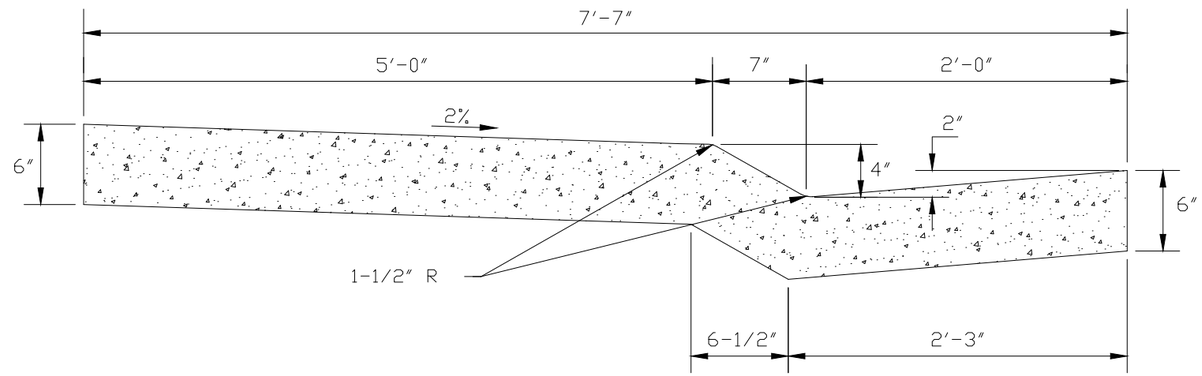

* SEE STANDARD NO. 10 FOR CONCRETE JOINT DETAILS
* ANY CURB TRANSITION FROM COMBINATION CURB, GUTTER AND SIDEWALK TO 6" VERTICAL CURB AND GUTTER SHALL TAKE PLACE IN A MINIMUM OF 12 FEET.

STANDARD 3 6" VERTICAL CURB, GUTTER AND ATTACHED SIDEWALK

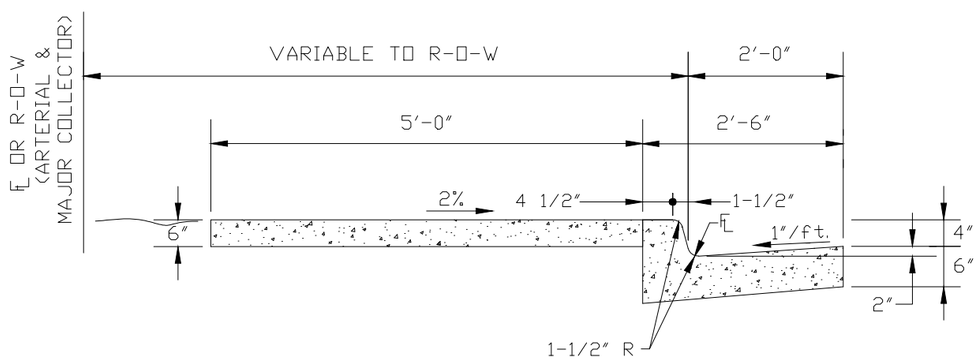

* SEE STANDARD NO. 10 FOR CONCRETE JOINT DETAILS
* SIDEWALK WIDTH SHALL BE SPECIFIED ON THE CONSTRUCTION PLANS AS APPROVED BY PLANNING & ZONING
* 6" VERTICAL CURB, GUTTER, AND SIDEWALK IS REQUIRED FOR COLLECTOR AND ARTERIAL STREETS.

STANDARD 4 6" VERTICAL CURB, GUTTER AND DETACHED SIDEWALK

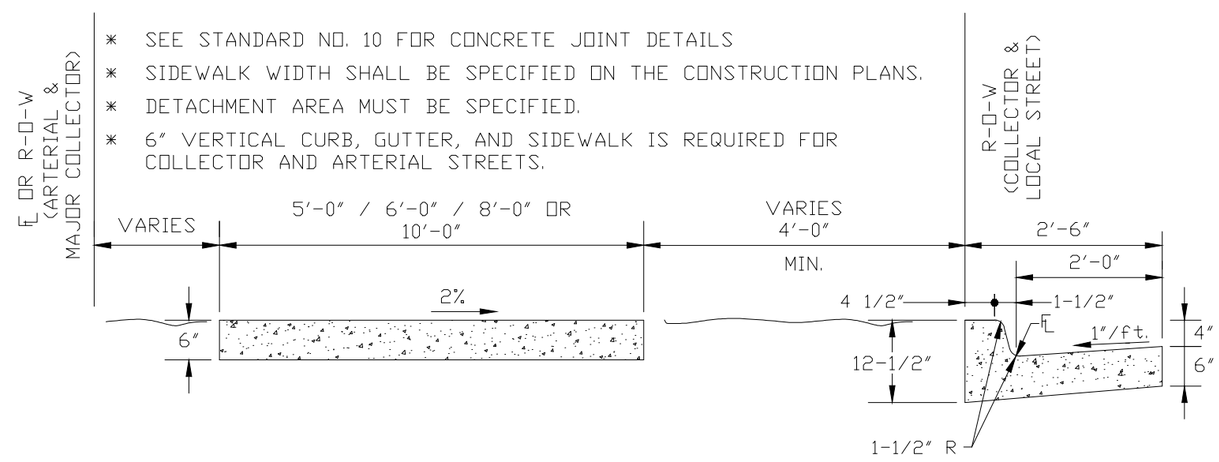

* SEE STANDARD NO. 10 FOR CONCRETE JOINT DETAILS
* SIDEWALK WIDTH SHALL BE SPECIFIED ON THE CONSTRUCTION PLANS.
* DETACHMENT AREA MUST BE SPECIFIED.
* 6" VERTICAL CURB, GUTTER, AND SIDEWALK IS REQUIRED FOR COLLECTOR AND ARTERIAL STREETS.

Revisions:	Designed By: SAK	Scale: (As Shown)	JEFFERSON COUNTY COLORADO — DIVISION OF Transportation and Engineering, 100 JEFFERSON COUNTY PARKWAY, SUITE 3500, GOLDEN, COLORADO 80419, (303) 271-8495
	Drawn By: SAK	Date Created:	STANDARD 2, 3 & 4 CURB, GUTTER & SIDEWALKS
	Checked By: Staff	Plot Date: 1/13/2025 F.I.R. Date:	Project No.: – Sheet - Of -
	File: STND-2-4.DWG	F.O.R. Date: For Const. Date:	
	File Location: G:_CAD\Standards\2023 Road Standards & Templates\Standards (2023)\Drawings\T&E Manual Standards		

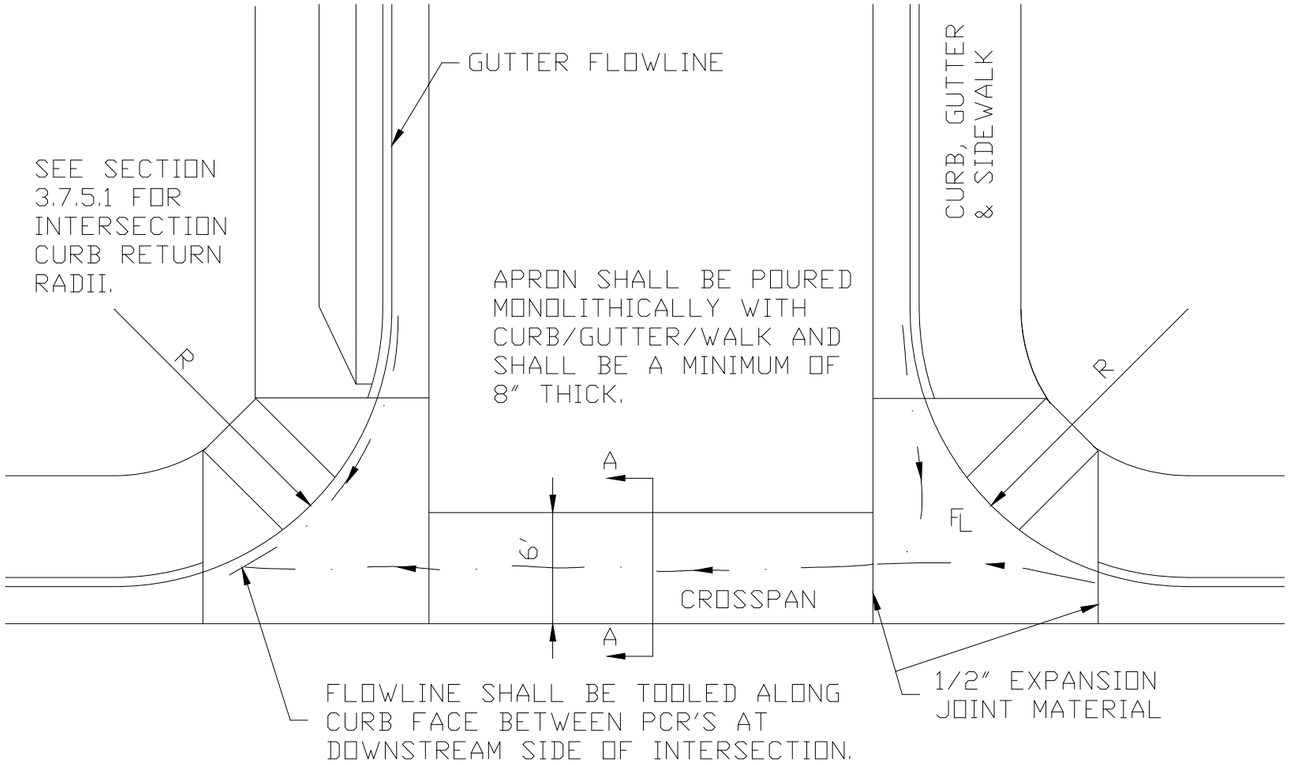

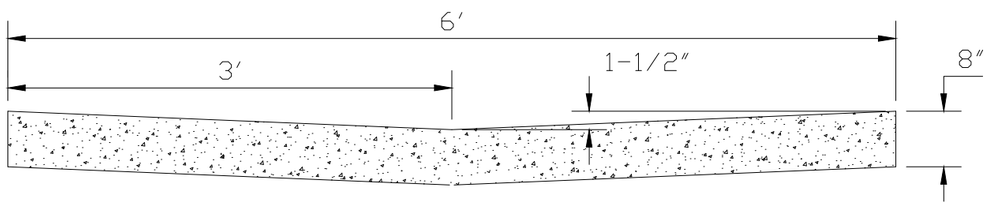

SECTION A – A
6 FOOT CROSSPAN

NOTE:

* SEE STANDARD NO. 10 FOR CONCRETE JOINT DETAILS.
* EXPANSION JOINTS ARE REQUIRED AT P.C.R.'S.
* CROSSPANS ARE NOT PERMITTED ACROSS ARTERIAL/COLLECTOR STREETS.

Revisions:	Designed By: SAK	Scale: (As Shown)	
	Drawn By: SAK	Date Created:	
	Checked By: Staff	Plot Date: 1/13/2025	F.I.R. Date:
	File: STND-5.DWG	F.O.R. Date:	For Const. Date:
	File Location: G:_CAD\Standards\2023 Road Standards & Templates\Standards (2023)\Drawings\T&E Manual Standards		

JEFFERSON COUNTY COLORADO

DIVISION OF
Transportation and Engineering
100 JEFFERSON COUNTY PARKWAY, SUITE 3500
GOLDEN, COLORADO 80419
(303) 271-8495

STANDARD 5
TYPICAL INTERSECTION CROSSPAN

Project No.: – Sheet - Of -

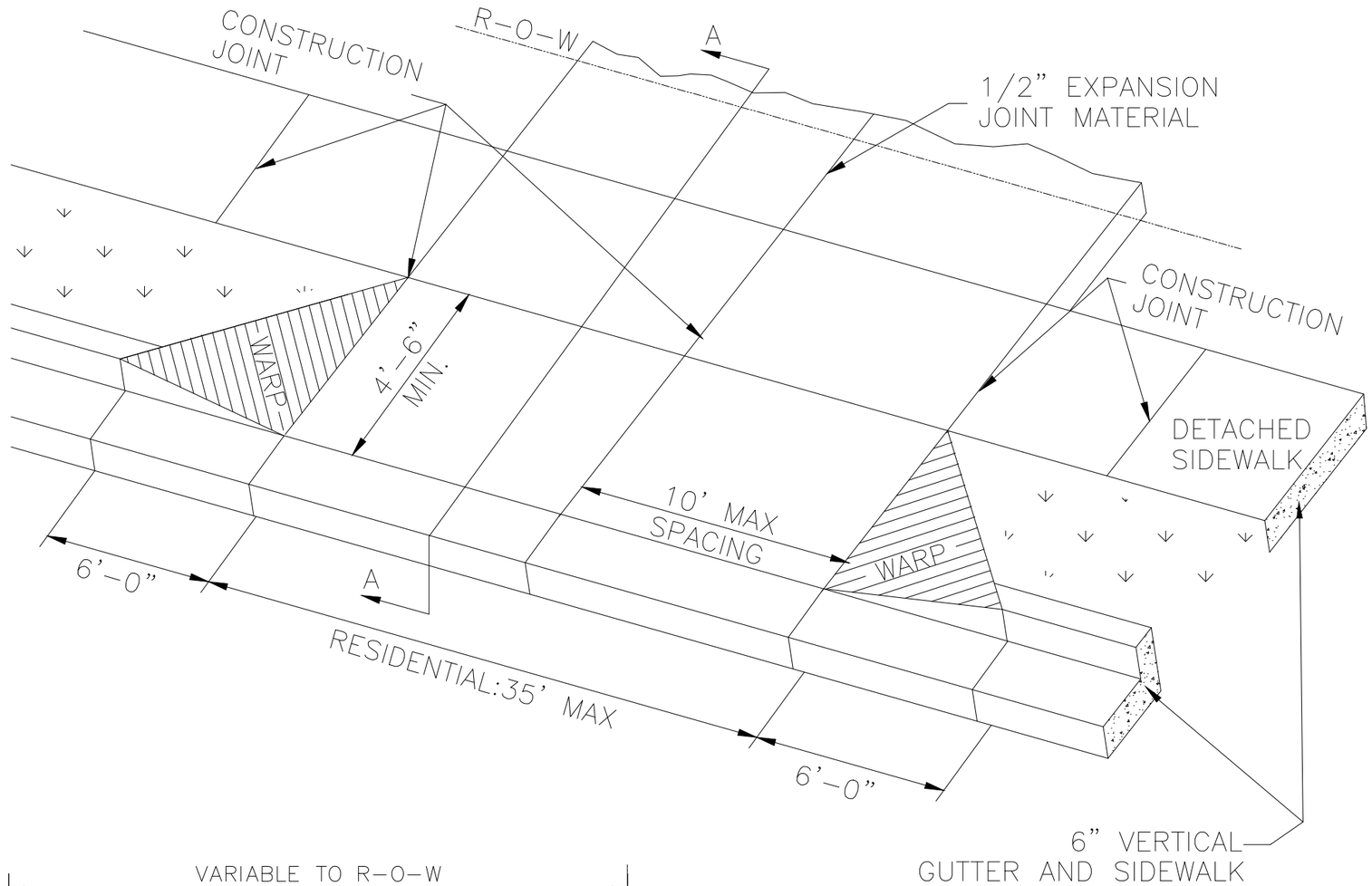

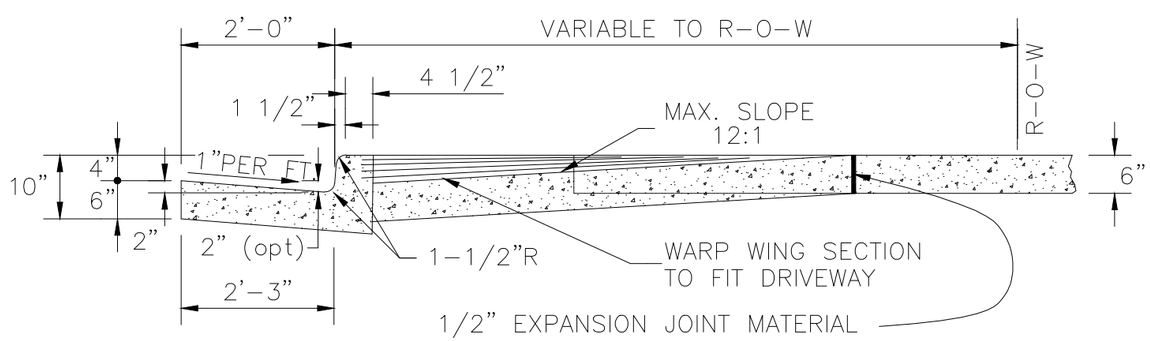

SECTION A - A

NOTE:

* THIS STANDARD IS NOT ALLOWED ON ARTERIAL STREETS.
* REFER TO DRIVEWAY INTERSECTION SPACING REQUIREMENTS IN THIS MANUAL.
* SEE STANDARD NO. 10 FOR CONCRETE JOINT DETAILS.
* SIDEWALK CROSS-SLOPE SHALL NOT EXCEED 2%.

Revisions:	Designed By: SAK	Scale: (As Shown)	
	Drawn By: SAK	Date Created:	
	Checked By: Staff	Plot Date: 1/13/2025	F.I.R. Date:
	File: STND-6.dwg	F.O.R. Date:	For Const. Date:
	File Location: G:_CAD\Standards\2023 Road Standards & Templates\Standards (2023)\Drawings\T&E Manual Standards		

JEFFERSON COUNTY COLORADO

DIVISION OF Transportation and Engineering
100 JEFFERSON COUNTY PARKWAY, SUITE 3500
GOLDEN, COLORADO 80419
(303) 271-8495

STANDARD 6
DRIVEWAY SECTION FOR 6" VERTICAL CURB & GUTTER

Project No.: – | Sheet - | Of -

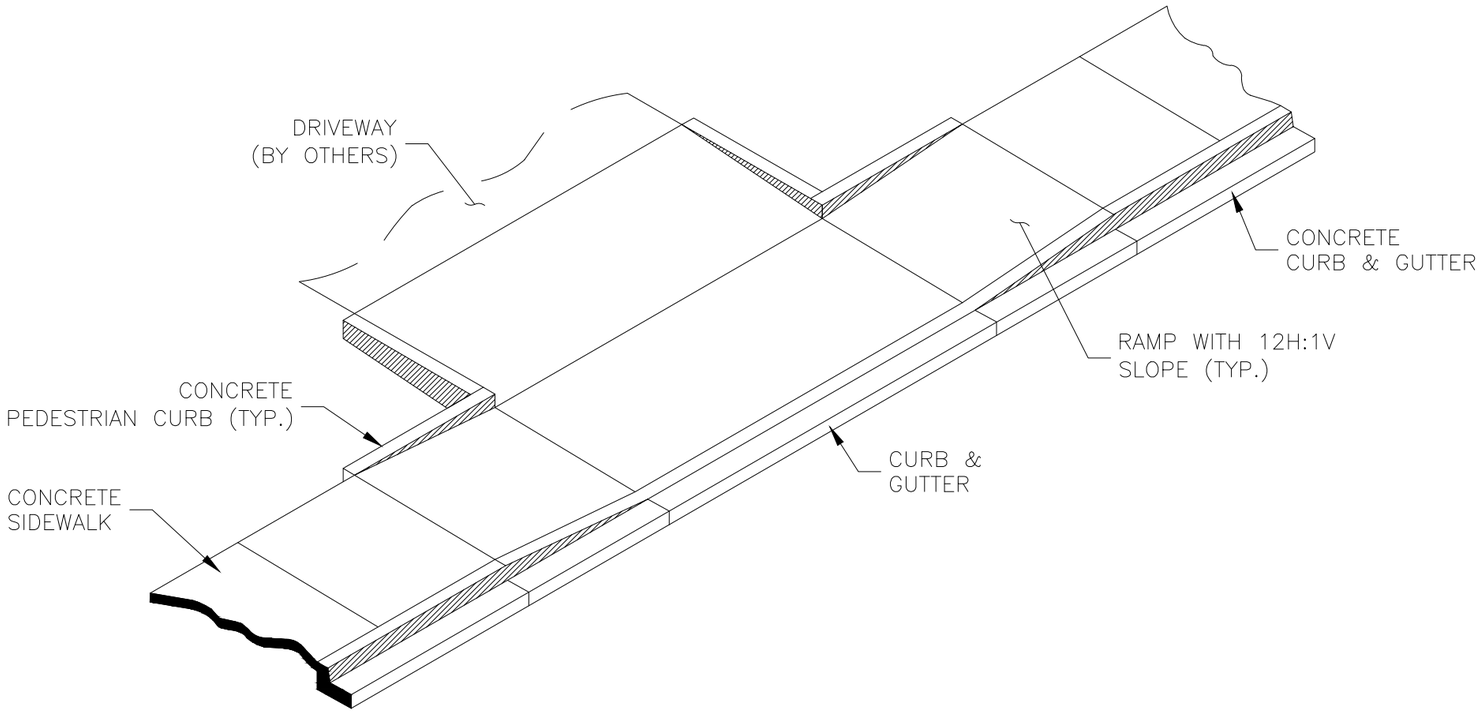

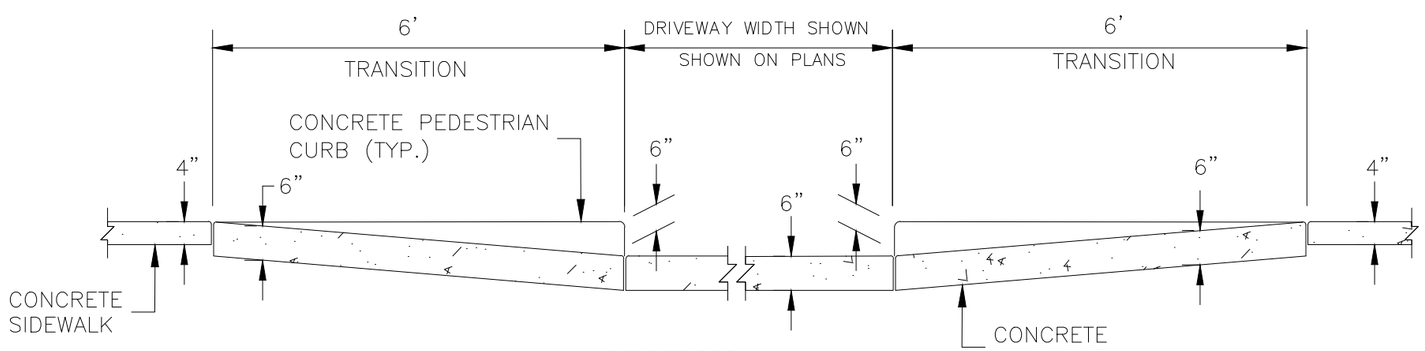

SECTION A – A

NOTE:

1. DRAINAGE STRUCTURES, TRAFFIC SIGNAL EQUIPMENT, JUNCTION BOXES, AND OTHER OBSTRUCTIONS SHOULD NOT BE PLACED IN FRONT OF THE DRIVEWAY RAMP ACCESS AREAS.
2. FOR THE CURB AND GUTTER SHOWN, SEE PLANS FOR CURB TYPE.
3. RAMP SLOPES SHALL BE 12:1 OR FLATTER.
4. CONSTRUCTION OF THE CONCRETE PEDESTRIAN CURB SHALL BE INCLUDED IN THE BID PRICE OF THE CONCRETE PAVEMENT.

Revisions:	Designed By: SAK	Scale: (As Shown)	JEFFERSON COUNTY COLORADO — DIVISION OF Transportation and Engineering, 100 JEFFERSON COUNTY PARKWAY, SUITE 3500, GOLDEN, COLORADO 80419, (303) 271-8495
	Drawn By: SAK	Date Created:	STANDARD 7-1
	Checked By: Staff	Plot Date: 1/13/2025 F.I.R. Date:	CONCRETE DRIVEWAY ENTRANCE (TYPE 2)
	File: STND-7.dwg	F.O.R. Date: For Const. Date:	Project No.: – Sheet - Of -
	File Location: G:_CAD\Standards\2023 Road Standards & Templates\Standards (2023)\Drawings\T&E Manual Standards		

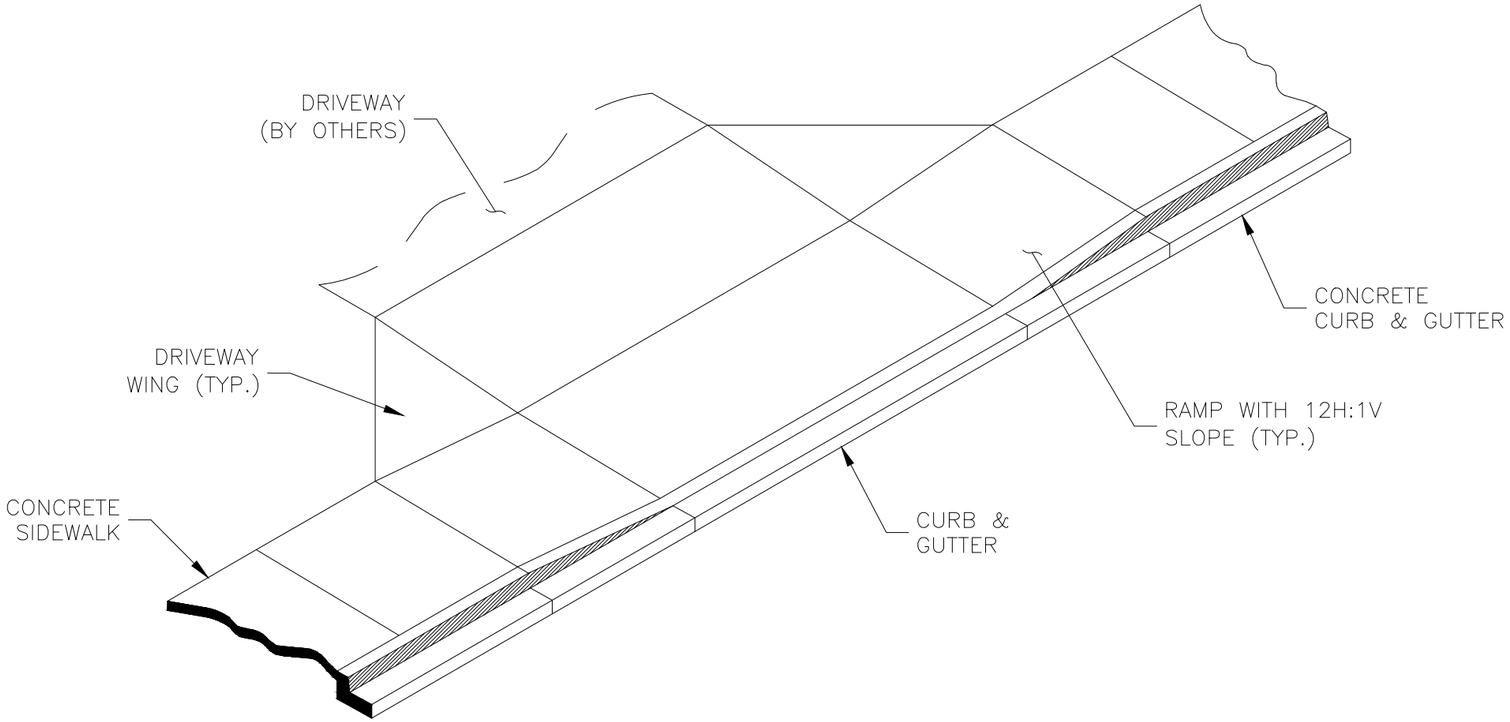

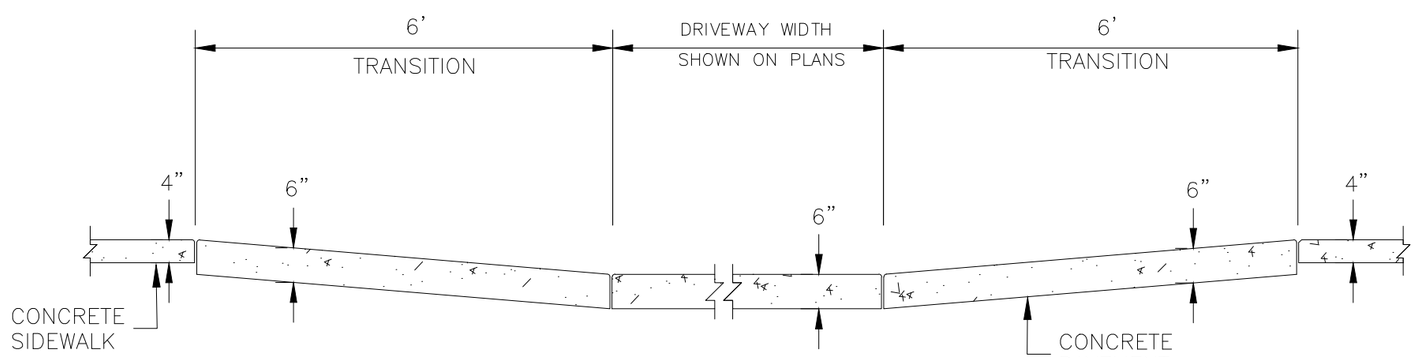

SECTION A – A

NOTE:

1. DRAINAGE STRUCTURES, TRAFFIC SIGNAL EQUIPMENT, JUNCTION BOXES, AND OTHER OBSTRUCTIONS SHOULD NOT BE PLACED IN FRONT OF THE DRIVEWAY RAMP ACCESS AREAS.
2. FOR THE CURB AND GUTTER SHOWN, SEE PLANS FOR CURB TYPE.
3. RAMP SLOPES SHALL BE 12:1 OR FLATTER.

Revisions:	Designed By: SAK	Scale: (As Shown)	
	Drawn By: SAK	Date Created:	
	Checked By: Staff	Plot Date: 1/13/2025	F.I.R. Date:
	File: STND–7.dwg	F.O.R. Date:	For Const. Date:
	File Location: G:_CAD\Standards\2023 Road Standards & Templates\Standards (2023)\Drawings\T&E Manual Standards		

JEFFERSON COUNTY COLORADO

DIVISION OF
Transportation and Engineering
100 JEFFERSON COUNTY PARKWAY, SUITE 3500
GOLDEN, COLORADO 80419
(303) 271–8495

STANDARD 7–2
CONCRETE DRIVEWAY ENTRANCE (TYPE 3)

Project No.: – | Sheet - | Of -

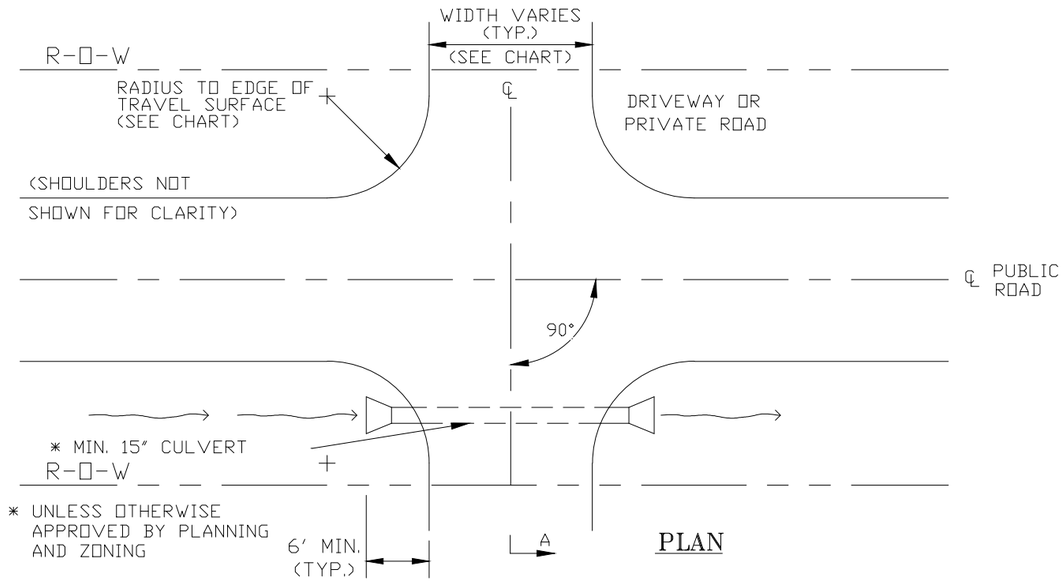

DRIVEWAYS AND PRIVATE ROADS SHALL INTERSECT WITH PUBLIC ROADS AT RIGHT (90°) ANGLES OR AS NEARLY AT RIGHT ANGLES AS POSSIBLE FOR A DISTANCE OF:

- 25' FROM THE TRAVEL SURFACE OR WITHIN THE R-O-W (WHICHEVER IS GREATER) WHEN INTERSECTING WITH A MAJOR COLLECTOR OR ARTERIAL ROAD, OR
- 15' FROM THE TRAVEL SURFACE OR WITHIN THE R-O-W (WHICHEVER IS GREATER) WHEN INTERSECTING WITH A COLLECTOR OR LOCAL ROAD.

TRAVEL SURFACE

	WIDTH (FEET)	RADIUS (FEET)
DRIVEWAY	10	10
PRIVATE ROAD	16-18	15

* AN ACCESS PERMIT FROM THE JEFFERSON COUNTY PLANNING & ZONING IS REQUIRED FOR A NEW OR MODIFICATION TO AN EXISTING DRIVEWAY OR PRIVATE ROAD ACCESSING A COUNTY ROAD.

PROFILE GRADES OF DRIVEWAYS AND PRIVATE ROADS SHALL BE AT LEAST 1% BUT NO GREATER THAN 4% FOR A DISTANCE OF 10' FROM EDGE OF SHOULDER OR WITHIN THE R-O-W (WHICHEVER IS GREATER) WHEN INTERSECTING WITH A PUBLIC ROAD.

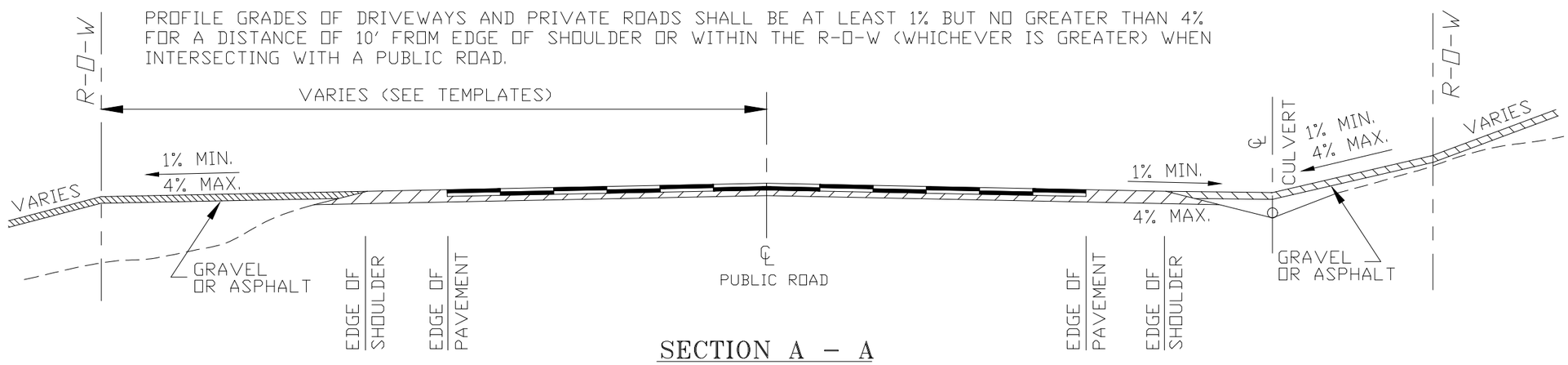

SECTION A – A

Revisions:	Designed By: SAK	Scale: (As Shown)	JEFFERSON COUNTY COLORADO	DIVISION OF Transportation and Engineering 100 JEFFERSON COUNTY PARKWAY, SUITE 3500 GOLDEN, COLORADO 80419 (303) 271-8495	STANDARD 8 DRIVEWAY/PRIVATE ROAD APPROACHES
	Drawn By: SAK	Date Created:			
	Checked By: Staff	Plot Date: 1/13/2025 F.I.R. Date:			Project No.: – Sheet - Of -
	File: STND-8.dwg	F.O.R. Date: For Const. Date:			
	File Location: G:_CAD\Standards\2023 Road Standards & Templates\Standards (2023)\Drawings\T&E Manual Standards				

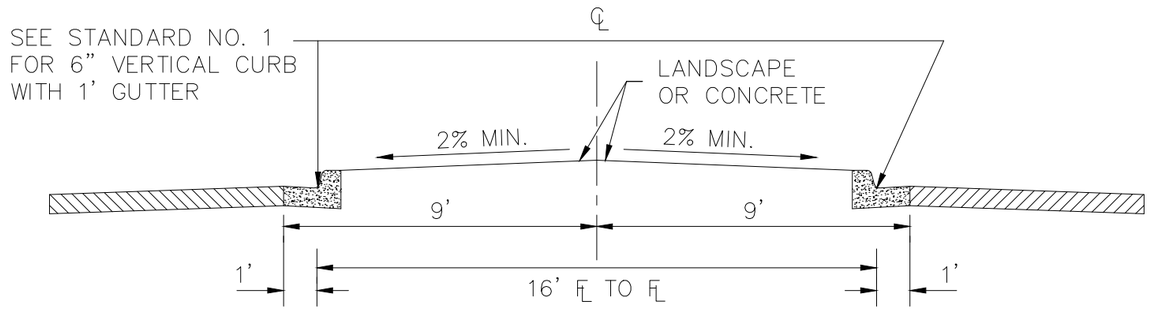

RAISED MEDIAN

* MEDIAN TREATMENT SHALL BE APPROVED BY PLANNING AND ZONING.
* SOIL SHALL BE STERILIZED BENEATH RAISED MEDIANS WITH CONCRETE TREATMENTS.
* CURB INLETS AND STORM SEWER SHALL BE PROVIDED TO DRAIN ALL RAISED MEDIANS.

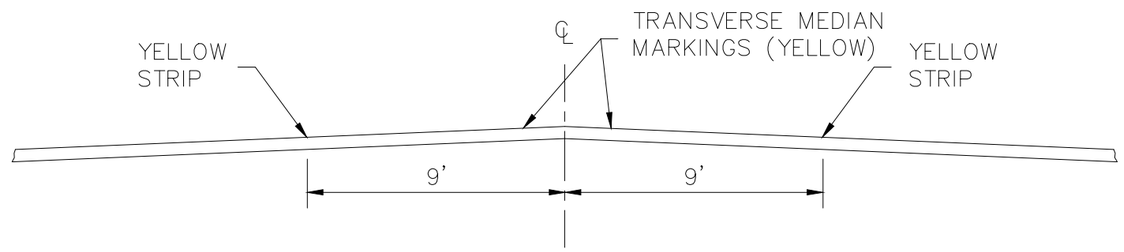

PAVED, FLUSH MEDIAN

* REFER TO CURRENT EDITION OF THE MANUAL ON UNIFORM TRAFFIC CONTROL DEVICES FOR ADDITIONAL STRIPING INFORMATION.

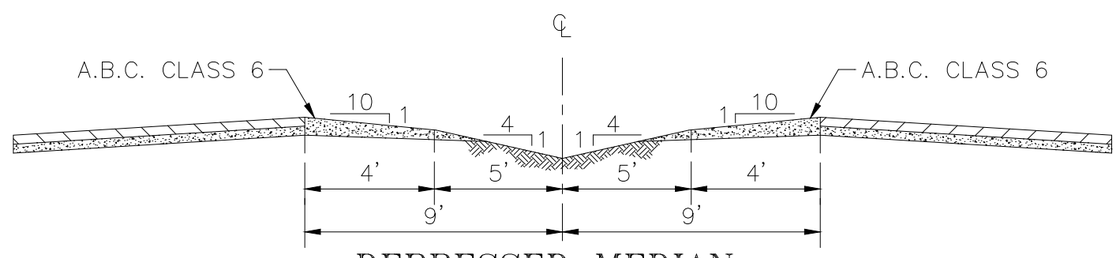

DEPRESSED MEDIAN

* MEDIAN TREATMENT SHALL BE APPROVED BY PLANNING AND ZONING.
* DRAINAGE SYSTEMS SHALL BE PROVIDED FOR IRRIGATED MEDIANS.

Revisions:	Designed By: SAK	Scale: (As Shown)	JEFFERSON COUNTY COLORADO — DIVISION OF Transportation and Engineering, 100 JEFFERSON COUNTY PARKWAY, SUITE 3500, GOLDEN, COLORADO 80419, (303) 271-8495
	Drawn By: SAK	Date Created:	STANDARD 9
	Checked By: Staff	Plot Date: 1/13/2025 F.I.R. Date:	TYPICAL MEDIAN DESIGNS
	File: STND-9.dwg	F.O.R. Date: For Const. Date:	Project No.: – Sheet - Of -
	File Location: G:_CAD\Standards\2023 Road Standards & Templates\Standards (2023)\Drawings\T&E Manual Standards		

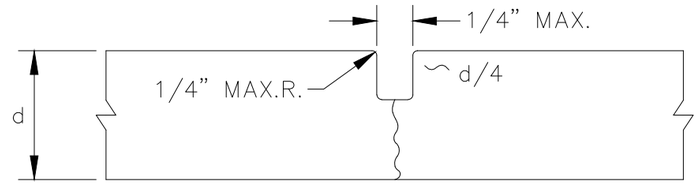

CONTRACTION JOINT

* MAXIMUM CONTRACTION JOINT SPACING FOR CURB,GUTTER AND SIDEWALKS IS 10 FEET.

* SAWCUT JOINTS (IF USED) SHALL BE AFTER CONCRETE HAS SUFFICIENTLY HARDENED, BUT BEFORE UNCONTROLLED CRACKING OCCURS.

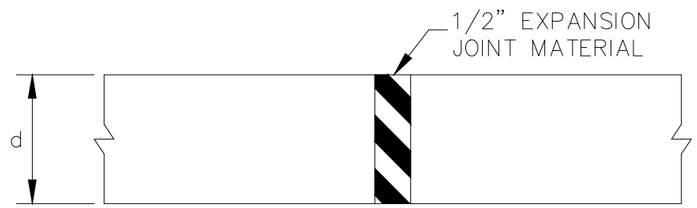

EXPANSION JOINT

* 1/2" EXPANSION JOINT MATERIAL SHALL BE PLACED AS REQUIRED AND SHALL EXTEND THE FULL DEPTH OF CONTACT SURFACE

* EXPANSION JOINTS SHALL BE INSTALLED WHEN ABUTTING EXISTING CONCRETE OR A FIXED STRUCTURE.

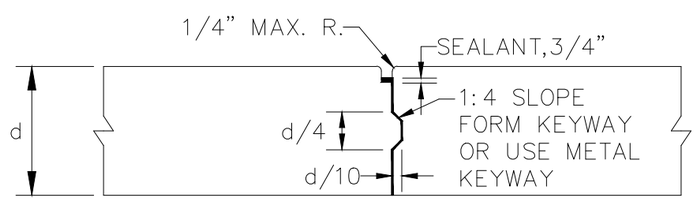

LONGITUDINAL OR TRANSVERSE CONSTRUCTION JOINT

* TRANSVERSE CONSTRUCTION JOINTS REQUIRED AT THE END OF EACH DAY'S POUR AND WHEN THE POUR HAS BEEN SUSPENDED FOR 30 MINUTES OR MORE.

NOTE: JOINT LAYOUT AND JOINT DETAILS FOR CONCRETE STREETS SHALL BE SUBMITTED TO TRANSPORTATION AND ENGINEERING FOR APPROVAL.

Revisions:	Designed By: SAK	Scale: (As Shown)	JEFFERSON COUNTY COLORADO — DIVISION OF Transportation and Engineering, 100 JEFFERSON COUNTY PARKWAY, SUITE 3500, GOLDEN, COLORADO 80419, (303) 271-8495
	Drawn By: SAK	Date Created:	STANDARD 10
	Checked By: Staff	Plot Date: 1/13/2025 F.I.R. Date:	CONCRETE JOINT DETAILS
	File: STND-10.DWG	F.O.R. Date: For Const. Date:	Project No.: – Sheet - Of -
	File Location: G:_CAD\Standards\2023 Road Standards & Templates\Standards (2023)\Drawings\T&E Manual Standards		

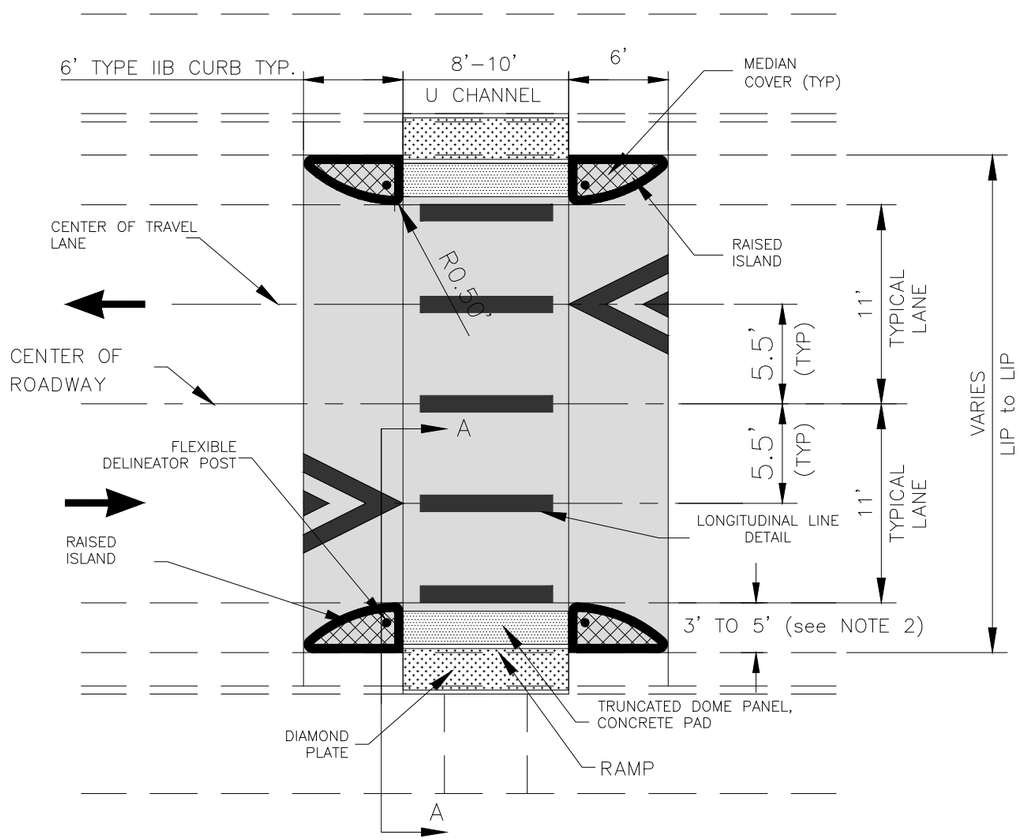

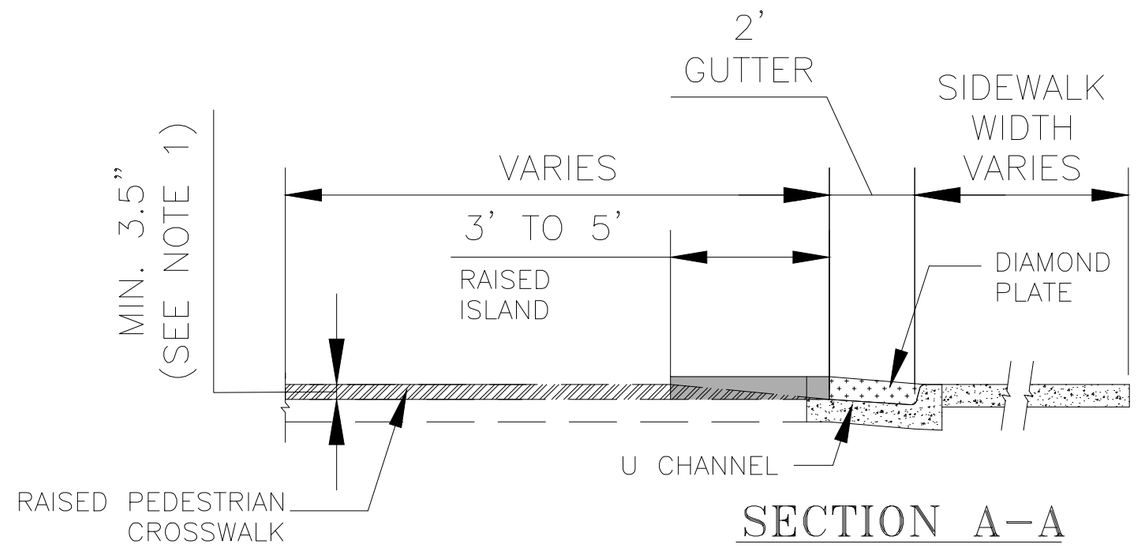

SECTION A–A

NOTES:

1. CROSSWALK HEIGHT SHALL MATCH CURB HEIGHT. MINIMUM CROSSWALK HEIGHT OF 3.5 INCHES MAY BE PERMITTED DUE TO EXISTING CONSTRAINTS.

2. IF BIKE LANES ARE PRESENT, CURB EXTENSION AND DIAMOND PLATE SHALL BE MODIFIED AS DIRECTED BY JEFFERSON COUNTY SO THAT BICYCLE TRAVEL IS NOT OBSTRUCTED.

3. RAISED CROSSING SHALL BE CONSTRUCTED OF CONCRETE UNLESS DIRECTED OTHERWISE BY JEFFERSON COUNTY.

Revisions:	Designed By: SAK	Scale: (As Shown)	JEFFERSON COUNTY COLORADO — DIVISION OF Transportation and Engineering, 100 JEFFERSON COUNTY PARKWAY, SUITE 3500, GOLDEN, COLORADO 80419, (303) 271–8495
	Drawn By: SAK	Date Created:	STANDARD 11
	Checked By: Staff	Plot Date: 1/13/2025 F.I.R. Date:	RAISED CROSSING DETAILS
	File: STND–11.dwg	F.O.R. Date: For Const. Date:	Project No.: – Sheet - Of -
	File Location: G:_CAD\Standards\2023 Road Standards & Templates\Standards (2023)\Drawings\T&E Manual Standards		

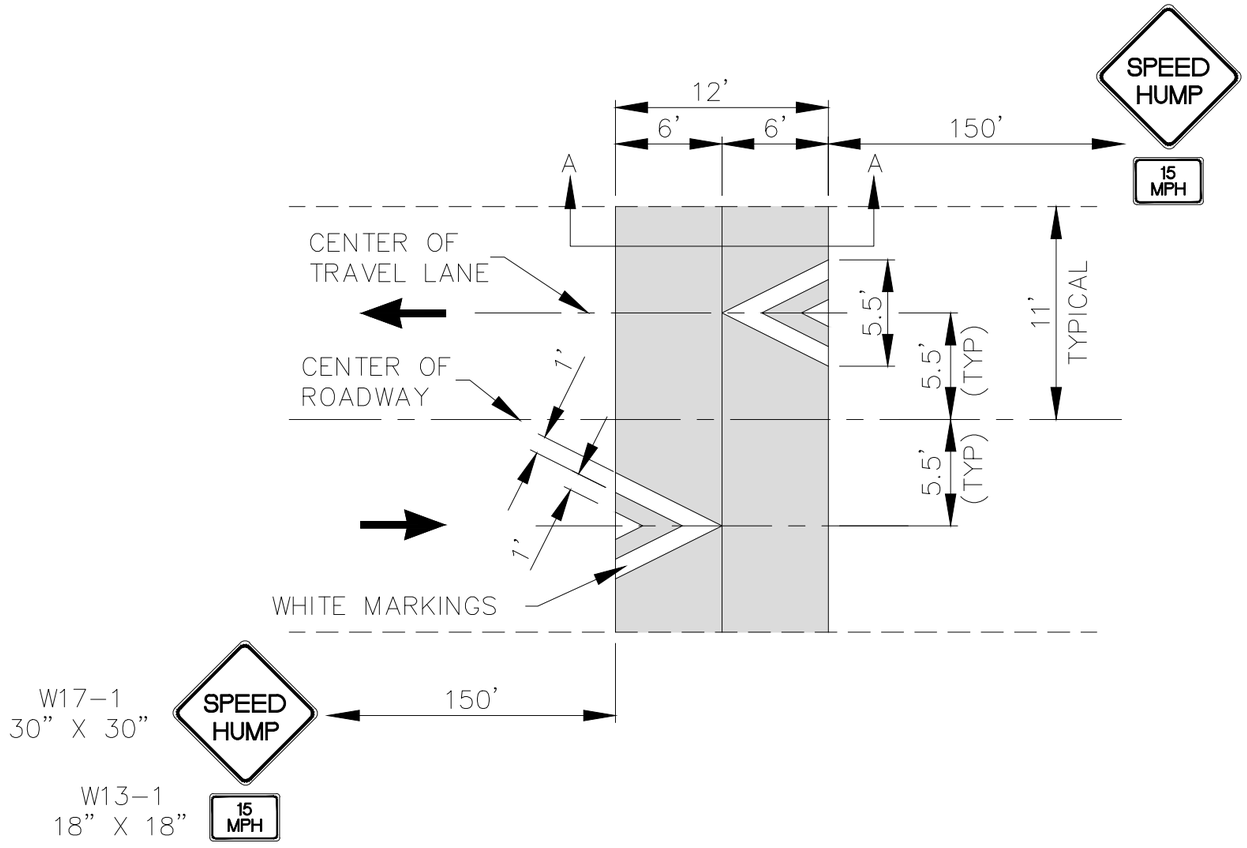

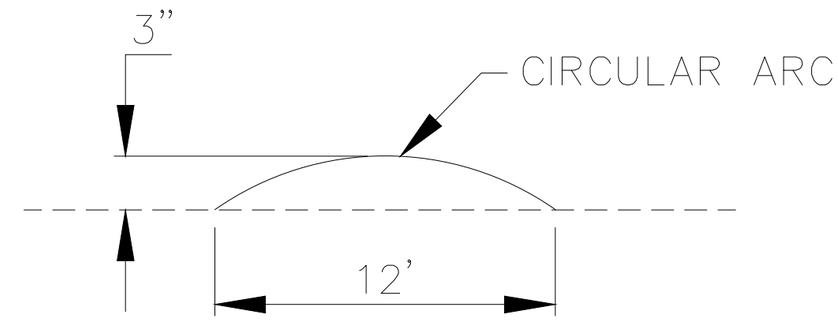

SECTION A-A

NOTES:

PAVEMENT MARKINGS SHALL BE PERMANENT MARKINGS (THERMOPLASTIC, STAMARK, ETC.)

ADVISORY SPEED LIMIT MAY BE LOWER DUE TO STREET GEOMETRICS.

THE EXACT LOCATION OF SPEED HUMP, MARKINGS AND SIGNS WILL BE DETERMINED IN THE FIELD BY THE ENGINEER. (JEFFERSON COUNTY STAFF)

Revisions:	Designed By: SAK	Scale: (As Shown)	JEFFERSON COUNTY COLORADO — DIVISION OF Transportation and Engineering, 100 JEFFERSON COUNTY PARKWAY, SUITE 3500, GOLDEN, COLORADO 80419, (303) 271-8495
	Drawn By: SAK	Date Created:	STANDARD 12
	Checked By: Staff	Plot Date: 1/13/2025 F.I.R. Date:	SPEED HUMP INSTALLATION
	File: STND-12.dwg	F.O.R. Date: For Const. Date:	Project No.: – Sheet - Of -
	File Location: G:_CAD\Standards\2023 Road Standards & Templates\Standards (2023)\Drawings\T&E Manual Standards		

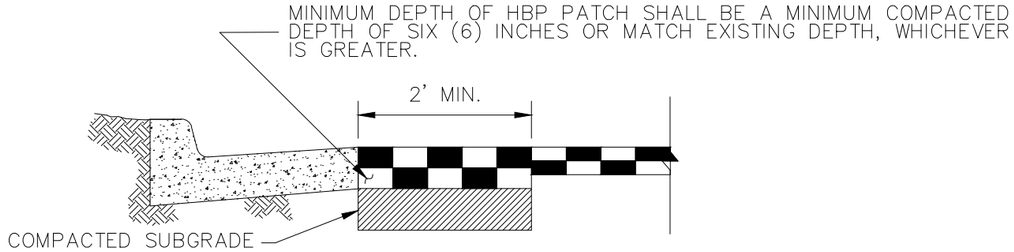

PATCHBACK ADJACENT TO CURB

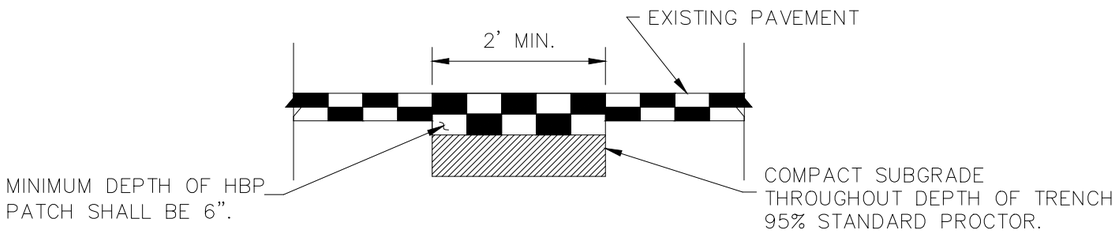

PATCHBACK FOR UTILITY AND SERVICE TRENCHES

NOTE:

* STRAIGHT SAWCUT OR BLADECUT THE EXISTING ASPHALT PAVEMENT WHEN JOINING WITH NEW ASPHALT PAVEMENT.
* PATCH SHALL BE PLACED AND COMPACTED IN LIFTS A MAXIMUM OF 3" IN DEPTH.
* APPLY SS-I TACK COAT TO EXISTING ASPHALT AND/OR CONCRETE SURFACES.
* TRENCHES LESS THAN 2' IN WIDTH MUST RECEIVE PRIOR APPROVAL FROM THE TRANSPORTATION & ENGINEERING DIVISION.

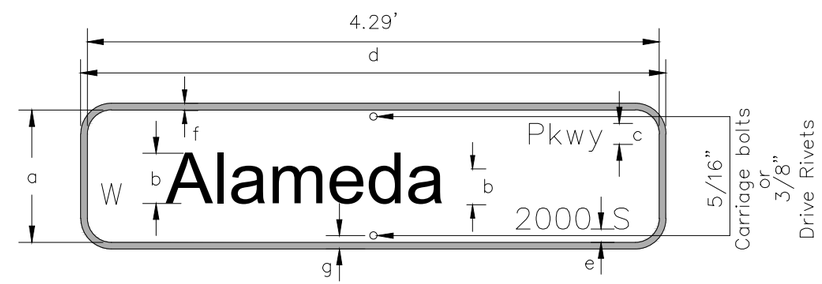

NOTE:

* SIGN BLANKS SHALL BE 6061 OR 5052-H38 ALUMINUM ALLOY .100"
* FACING SHALL BE 3M GREEN ELECTRO CUT FILM OR EQUIVALENT. * LETTERS AND NUMBERS SHALL BE 3M HIGH INTENSITY GRADE PRISMATIC WHITE OR EQUIVALENT.
* ROAD TYPE (AVE, PKWY, ETC.) TO BE CENTERED IF POSSIBLE OVER GAP BETWEEN BLOCK # AND DIRECTION.
* FONT TYPE SHALL BE HIGHWAY GOTHIC B FED KERN REV, HELVETICA MED COMP ACCT AK REV, OR EQUIVALENT.

** POST MOUNTED OVER 40mph: 8" UPPER AND 6" LOWER.

** POST MOUNTED 40mph & UNDER: 6" UPPER AND 4.5" LOWER.

No.	Description	Dimensions (inches)		
		Overhead	Post-mounted, multi-lane, more than 40 mph	Post-mounted, other (multi-lane, 40 mph or less OR two-lane, all speeds)
a	sign height	18	9	9
b	initial capital letter height for street name	12	8	6
	lower case letter height for street name	9	6	4.5
c	initial capital letter height for street type indicator	5	3	3
	lower case letter height for street type indicator	4.5	2.25	2.25
d	length of sign	varies	varies	varies
e	edge of street type and block number to inside edge of border	0.5	0.5	0.5
f	border thickness	1	0.5	0.5
g	bolt hole center to edge of sign	n/a	1	1

ROAD AND STREET NAME SIGNS

Revisions:	Designed By: SAK	Scale: (As Shown)	
	Drawn By: SAK	Date Created:	
	Checked By: Staff	Plot Date: 1/13/2025	F.I.R. Date:
	File: STND-13-14.dwg	F.O.R. Date:	For Const. Date:
	File Location: G:_CAD\Standards\2023 Road Standards & Templates\Standards (2023)\Drawings\T&E Manual Standards		

JEFFERSON COUNTY COLORADO

DIVISION OF Transportation and Engineering
100 JEFFERSON COUNTY PARKWAY, SUITE 3500
GOLDEN, COLORADO 80419
(303) 271-8495

STANDARD 13 & 14

ASPHALT STREET/ROAD PATCHBACK & ROAD AND STREET NAME SIGNS

Project No.: – Sheet - Of -

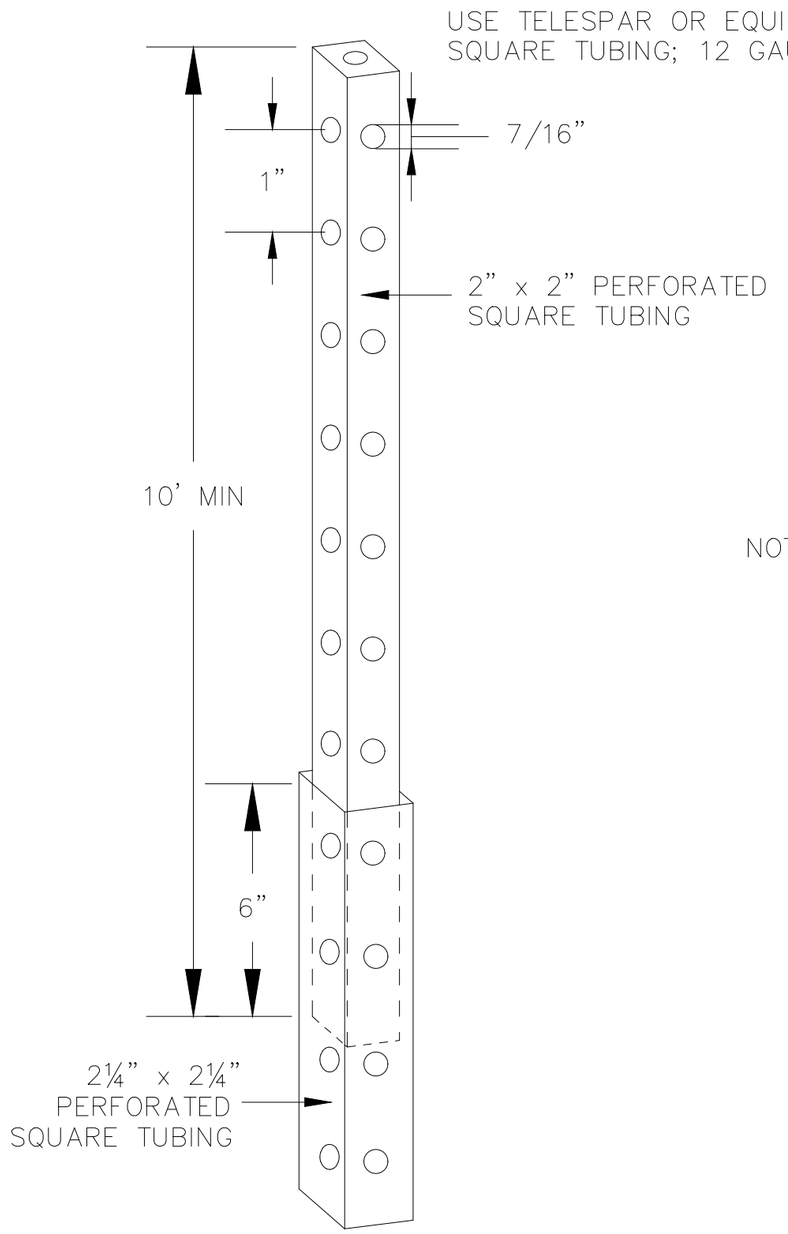

NOTE: INSTALLATIONS TO USE 3' LONG X 2.25" X 2.25" GALVANIZED TUBE BASE.

– 6" PVC SLEEVE TO BE USED FOR ALL SIGN POST BASES IN CONCRETE

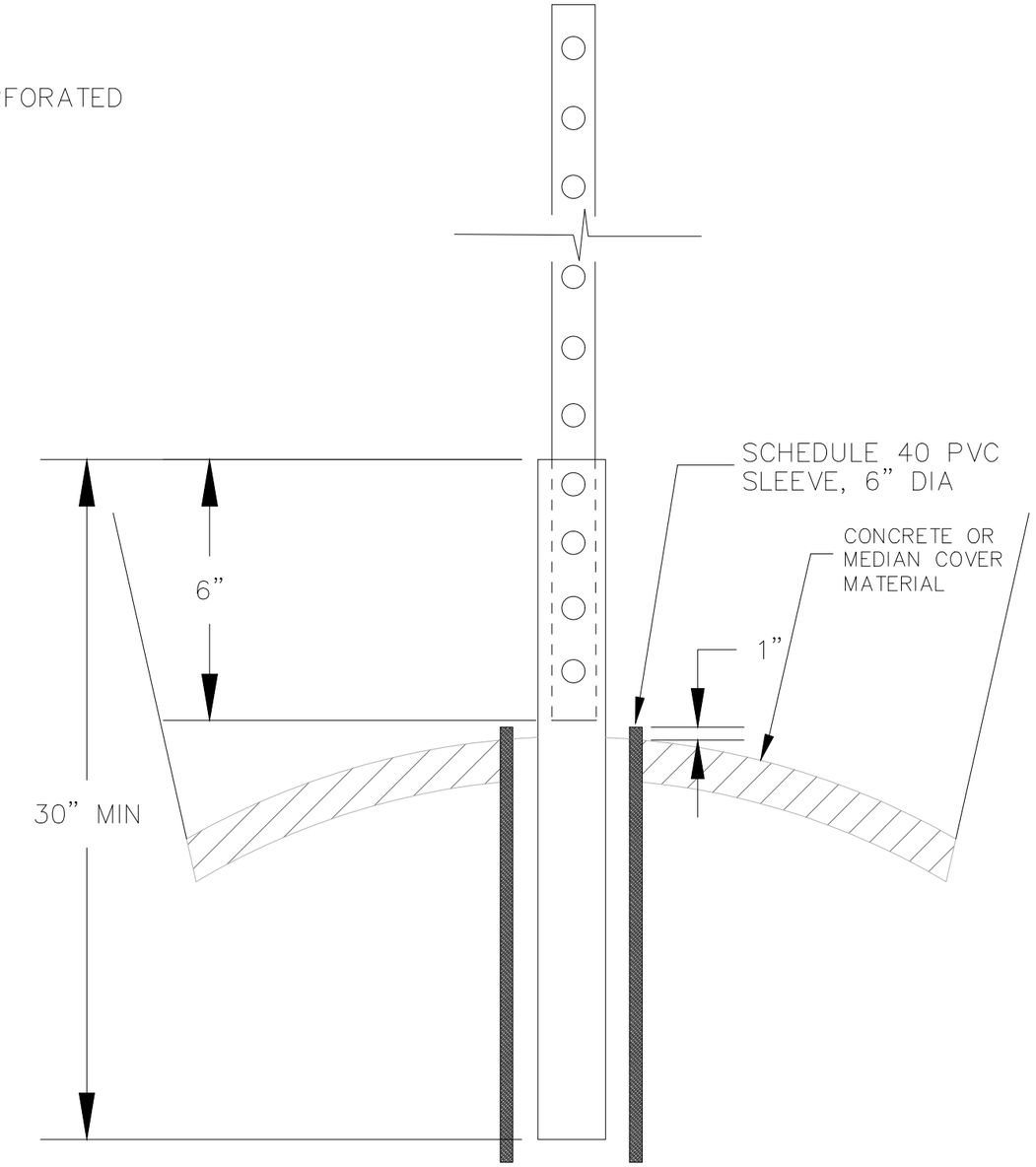

SLEEVE FOR SIGN POST IN CONCRETE OR MEDIAN

Revisions:	Designed By: SAK	Scale: (As Shown)	
	Drawn By: SAK	Date Created:	
	Checked By: Staff	Plot Date: 1/13/2025	F.I.R. Date:
	File: STND-15.dwg	F.O.R. Date:	For Const. Date:
	File Location: G:_CAD\Standards\2023 Road Standards & Templates\Standards (2023)\Drawings\T&E Manual Standards		

JEFFERSON COUNTY COLORADO

DIVISION OF Transportation and Engineering
100 JEFFERSON COUNTY PARKWAY, SUITE 3500
GOLDEN, COLORADO 80419
(303) 271-8495

STANDARD 15
SIGN POST AND BASE

Project No.: – Sheet - Of -

STEEL POLE - TENON TOP
SIDE MOUNT LUMINAIRES

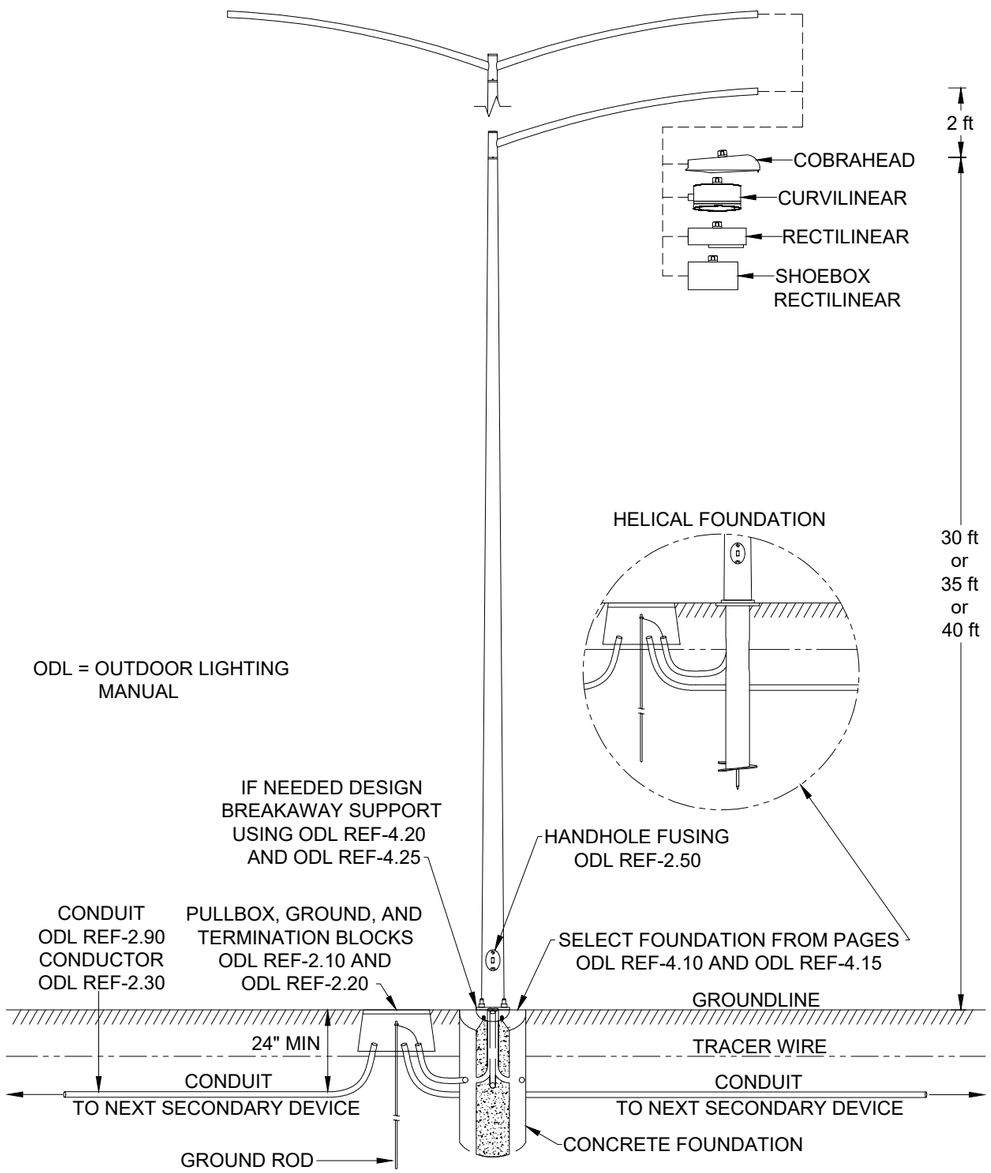

SIDE MOUNT LUMINAIRE
COBRAHEAD - LED

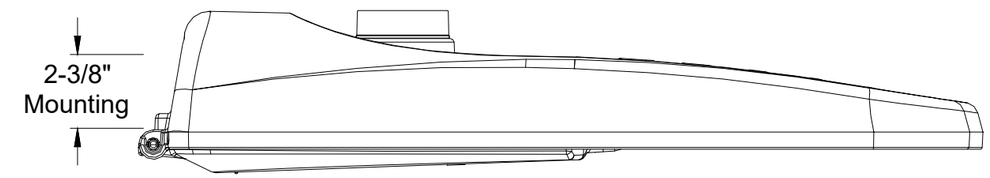

Description: For use on 2-3/8" OD arm	C/U	Luminaire Cat ID	Color
LED			
Cobrahead - 14000 lm LED - type D	**ESLC25LY**	219752	Grey8

Notes:
1. C/Us include the luminaire, and the Long Life photo control.
2. Design type B, type C, type D and type E for LED luminaires. Types B, C, D and E are functional equivalents to 100, 150, 250 and 400-Watt HPS luminaires respectively. The lumens (lm) shown are the delivered lumens. Please contact EDS or the latest specification for wattage rating.
3. Design poles, mast arms, foundations etc. using sections PL-INDEX, AM-INDEX and ODL REF-INDEX.
4. Cobrahead luminaires are slip fit mounted on 2-3/8" Outside Diameter (OD) pipe mast arms.
5. Check for proper illumination levels according to type of application.
6. All standard LED Cobrahead luminaires have multi-voltage drivers rated for 120- 277 V. LED lights can be designed for 120 V, 208 V, 240 V, and 277 V systems.

Revisions:	Designed By: SAK	Scale: (As Shown)	
	Drawn By: SAK	Date Created:	
	Checked By: Staff	Plot Date: 1/13/2025	F.I.R. Date:
	File: STND-16.dwg	F.O.R. Date:	For Const. Date:
	File Location: G:_CAD\Standards\2023 Road Standards & Templates\Standards (2023)\Drawings\T&E Manual Standards		

JEFFERSON COUNTY COLORADO
DIVISION OF Transportation and Engineering
100 JEFFERSON COUNTY PARKWAY, SUITE 3500
GOLDEN, COLORADO 80419
(303) 271-8495

STANDARD 16-1 & 16-2
TYPICAL ARTERIAL/MAJOR COLLECTOR STREET LIGHTING

Project No.: – Sheet - Of -

STREET NAME SIGN AND BRACKET ON TRAFFIC SIGNAL POLE

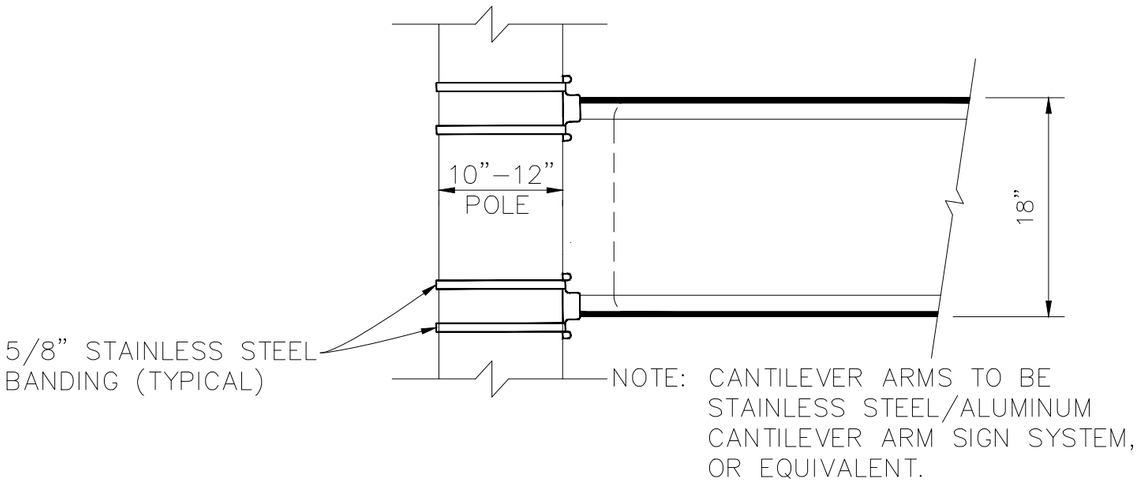

TYPICAL INSTALLATION *

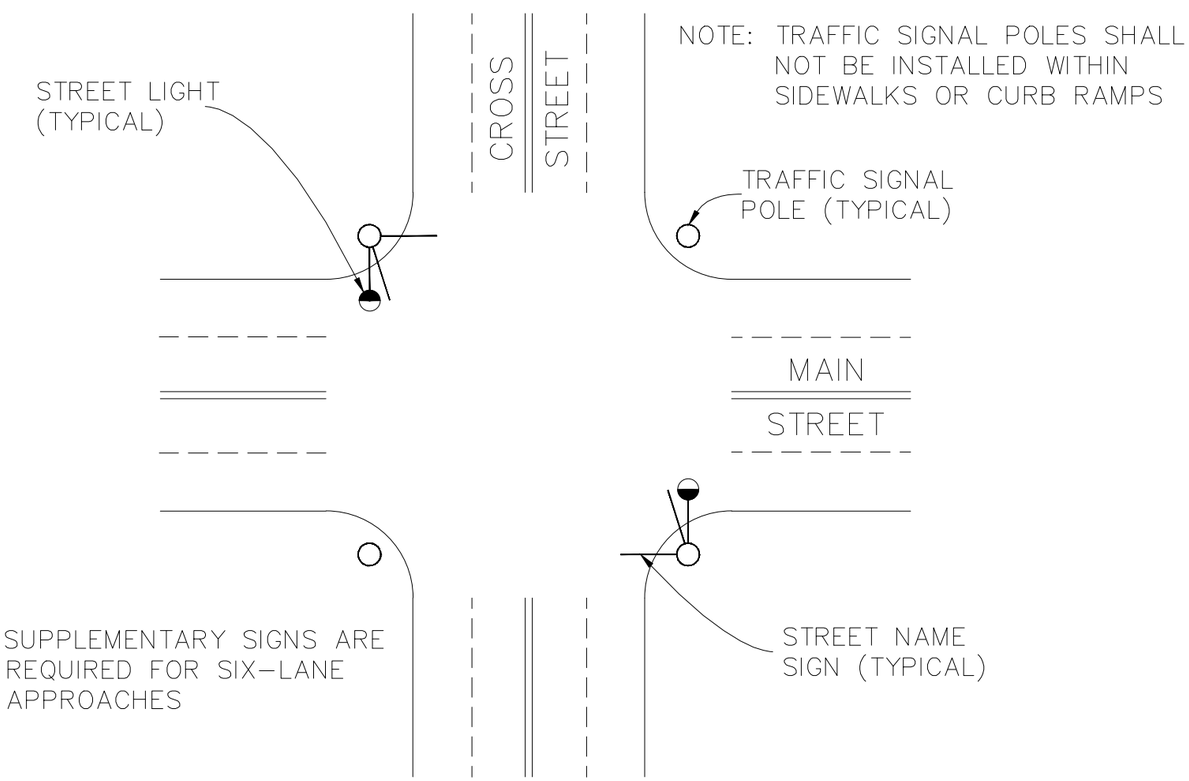

Revisions:	Designed By: SAK	Scale: (As Shown)	
	Drawn By: SAK	Date Created:	
	Checked By: Staff	Plot Date: 1/13/2025	F.I.R. Date:
	File: STND–17.dwg	F.O.R. Date:	For Const. Date:
	File Location: G:_CAD\Standards\2023 Road Standards & Templates\Standards (2023)\Drawings\T&E Manual Standards		

JEFFERSON COUNTY COLORADO

DIVISION OF
Transportation and Engineering
100 JEFFERSON COUNTY PARKWAY, SUITE 3500
GOLDEN, COLORADO 80419
(303) 271–8495

STANDARD 17

STREET NAME SIGN AND BRACKET ON TRAFFIC SIGNAL POLE – TYPICAL

Project No.: – Sheet - Of -

WATERPROOFING MEMBRANE APPLIED OVER ENTIRE HORIZONTAL SURFACE OF CBC.

OVERLAP EDGES OF ROLL MATERIAL 6 INCHES MINIMUM AND SEAL.

CONCRETE BOX CULVERT

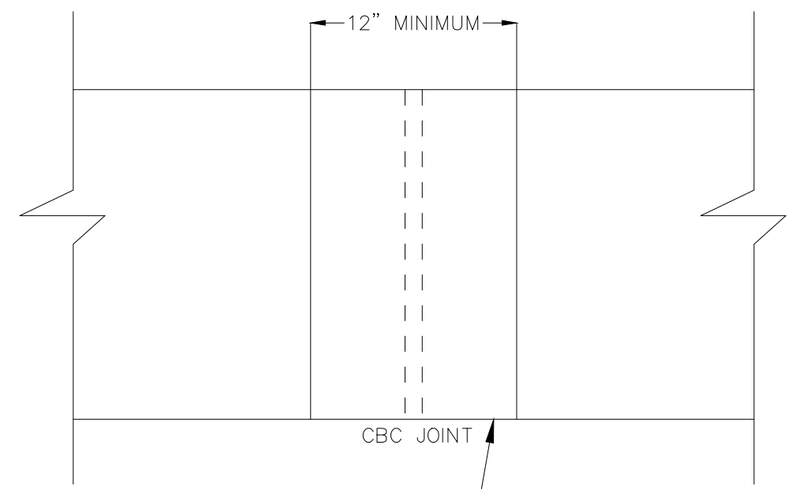

SEAL VERTICAL JOINTS WITH WATERPROOFING MEMBRANE OR SELF ADHESIVE ROLL MATERIAL.

JOINTS ARE SEALED ENTIRE HEIGHT OF CBC AND ON OUTSIDE CBC SECTIONS.

Revisions:	Designed By: SAK	Scale: (As Shown)	
	Drawn By: SAK	Date Created:	
	Checked By: Staff	Plot Date: 1/13/2025	F.I.R. Date:
	File: STND-18.dwg	F.O.R. Date:	For Const. Date:
	File Location: G:_CAD\Standards\2023 Road Standards & Templates\Standards (2023)\Drawings\T&E Manual Standards		

JEFFERSON COUNTY COLORADO

DIVISION OF
Transportation and Engineering
100 JEFFERSON COUNTY PARKWAY, SUITE 3500
GOLDEN, COLORADO 80419
(303) 271-8495

STANDARD 18

WATERPROOFING MEMBRANES FOR CONCRETE BOX CULVERT

Project No.: – | Sheet - | Of -

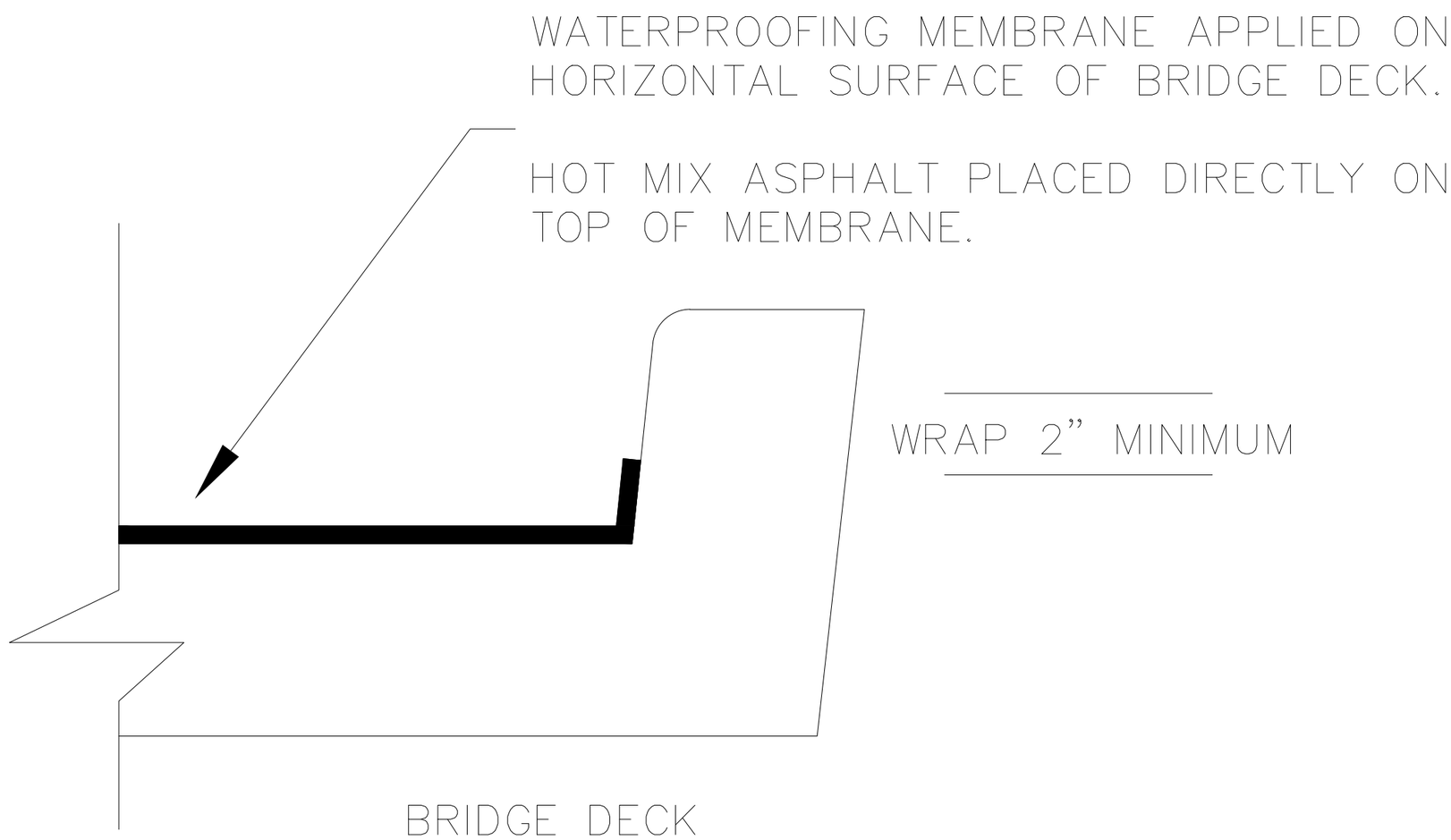

Revisions:	Designed By: SAK	Scale: (As Shown)	
	Drawn By: SAK	Date Created:	
	Checked By: Staff	Plot Date: 1/13/2025	F.I.R. Date:
	File: STND-19.dwg	F.O.R. Date:	For Const. Date:
	File Location: G:_CAD\Standards\2023 Road Standards & Templates\Standards (2023)\Drawings\T&E Manual Standards		

JEFFERSON COUNTY COLORADO

DIVISION OF
Transportation and Engineering
100 JEFFERSON COUNTY PARKWAY, SUITE 3500
GOLDEN, COLORADO 80419
(303) 271-8495

STANDARD 19
WATERPROOFING MEMBRANES FOR BRIDGE DECK

Project No.: – Sheet - Of

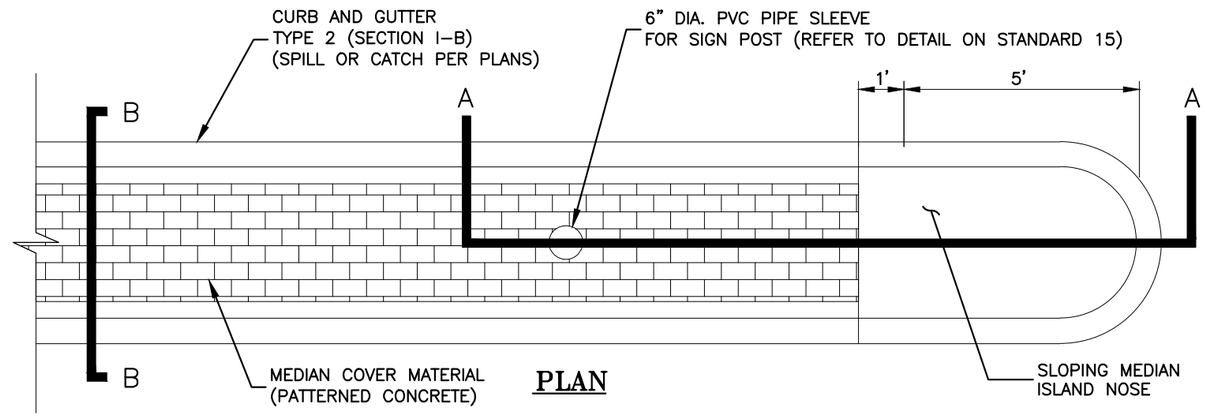

PLAN

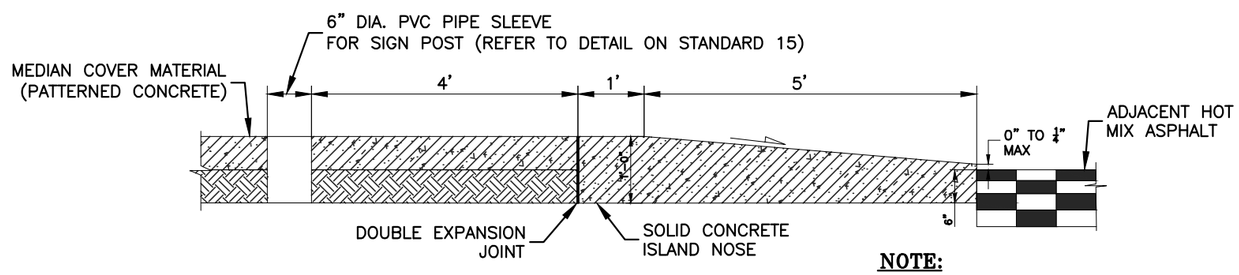

CROSS SECTION MEDIAN COVER MATERIAL SECTION A–A

NOTE:

- THE RISE AT GUTTER FLOWLINE SHALL BE ¼" MAXIMUM, JUST ENOUGH FOR WATER TO RUN AROUND THE MEDIAN NOSE IF NEEDED.

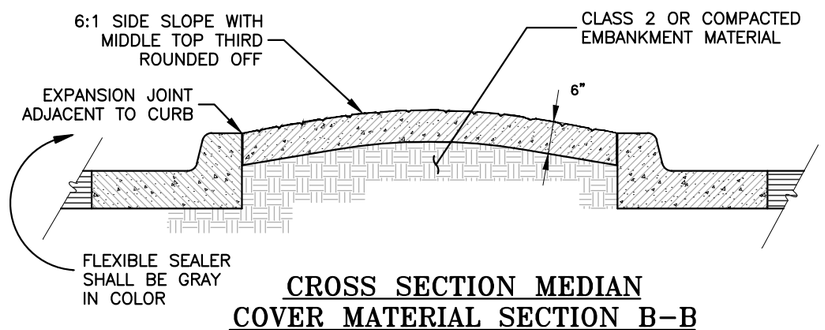

CROSS SECTION MEDIAN COVER MATERIAL SECTION B–B

Revisions:	Designed By: SAK	Scale: (As Shown)	
	Drawn By: SAK	Date Created:	
	Checked By: Staff	Plot Date: 1/13/2025 F.I.R. Date:	
	File: STND–20.dwg	F.O.R. Date: For Const. Date:	
	File Location: G:_CAD\Standards\2025 Road Standards & Templates\Standards (2025)\Drawings		

JEFFERSON COUNTY COLORADO

DIVISION OF
Transportation and Engineering
100 JEFFERSON COUNTY PARKWAY, SUITE 3500
GOLDEN, COLORADO 80419
(303) 271–8495

STANDARD 20
MEDIAN COVER MATERIAL – PATTERNED CONCRETE

Project No.: – Sheet - Of -

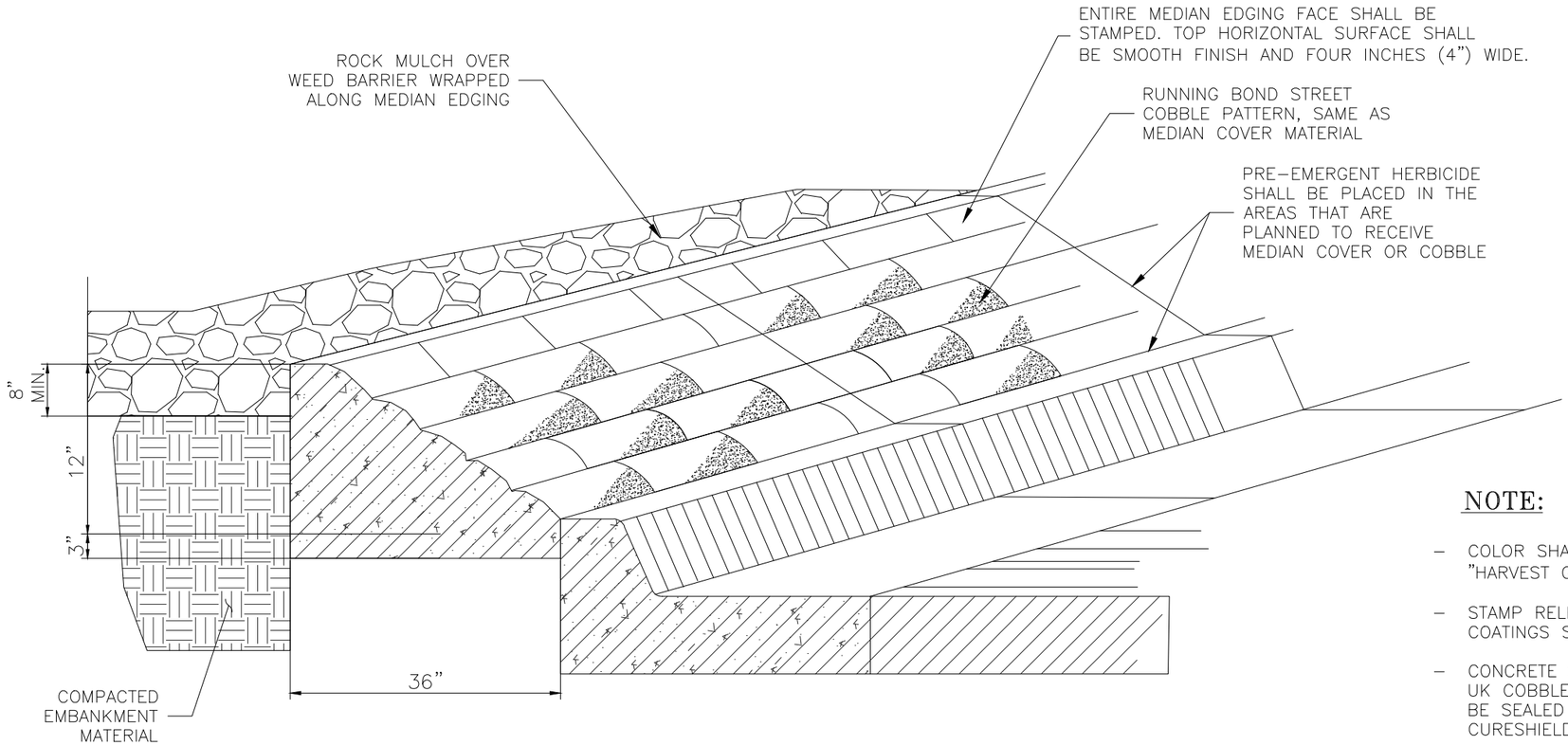

NOTE:

- COLOR SHALL BE DAVIS #5084 "HARVEST GOLD"
- STAMP RELEASE SHALL BE CONCRETE COATINGS STAMP-TEK LIQUID RELEASE
- CONCRETE STAMP PATTERN SHALL BE UK COBBLESTONE. CONCRETE SHALL BE SEALED WITH SPECCHEM CURESHIELD EX.
- CLEAR SEALER SHALL BE APPLIED ONCE LIQUID RELEASE HAS FULLY EVAPORATED.

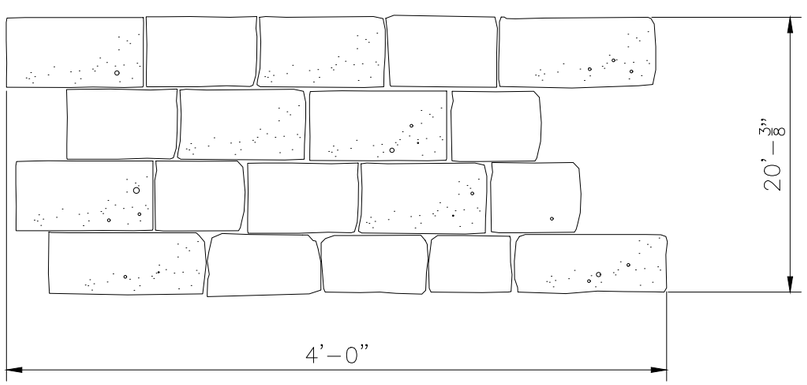

NOTE:

- SAWCUT CONTROL JOINTS SHALL BE PLACED EVERY TEN (10) LINEAR FEET, $\frac{1}{4}$ THE THICKNESS OF THE CONCRETE.
- EXPANSION JOINTS SHALL BE PLACED EVERY 100 LINEAR FEET.
- EXPANSION JOINTS SHALL HAVE A ZIP STRIP (SNAP-CAP) AND CURE SEALER (SIKAFLEX-2C) APPLIED. CURE SEALER FOR EXPANSION JOINTS IN THE PATTERNED CONCRETE SHALL BE TAN.

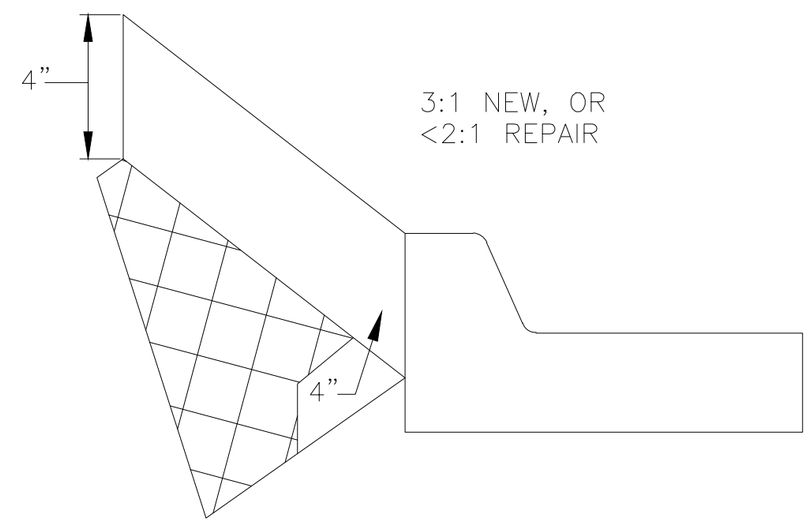

Revisions:	Designed By: SAK	Scale: (As Shown)	
	Drawn By: SAK	Date Created:	
	Checked By: Staff	Plot Date: 1/13/2025	F.I.R. Date:
	File: STND-21.dwg	F.O.R. Date:	For Const. Date:
	File Location: G:_CAD\Standards\2023 Road Standards & Templates\Standards (2023)\Drawings\T&E Manual Standards		

JEFFERSON COUNTY COLORADO

DIVISION OF
Transportation and Engineering
100 JEFFERSON COUNTY PARKWAY, SUITE 3500
GOLDEN, COLORADO 80419
(303) 271-8495

STANDARD 21
MEDIAN EDGING - PATTERNED CONCRETE

Project No.: - | Sheet - | Of

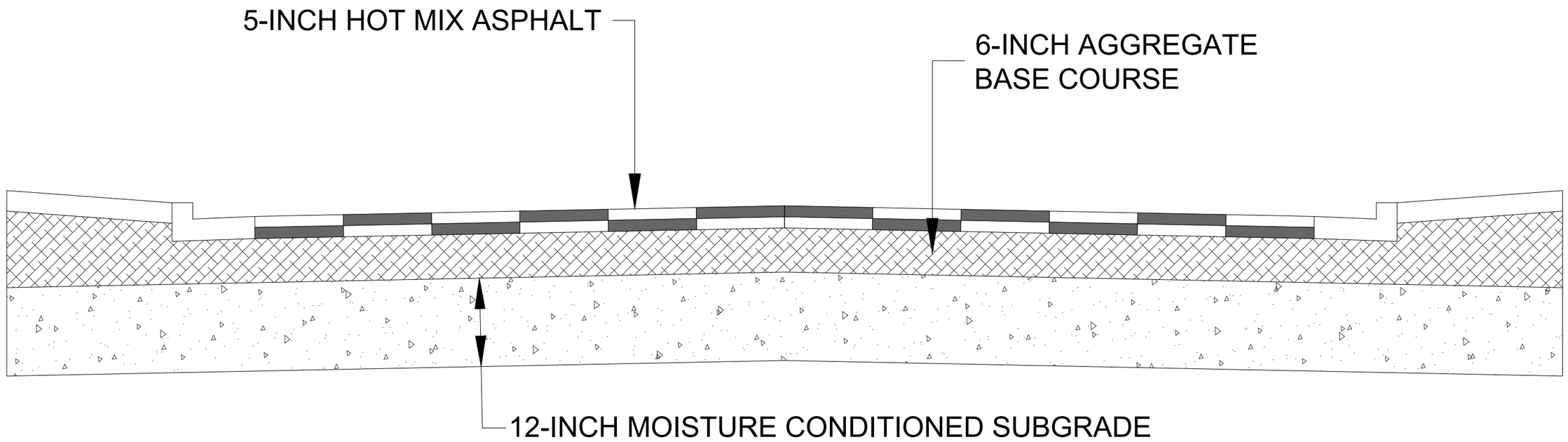

Revisions:	Designed By: SAK	Scale: (As Shown)	JEFFERSON COUNTY COLORADO — DIVISION OF Transportation and Engineering, 100 JEFFERSON COUNTY PARKWAY, SUITE 3500, GOLDEN, COLORADO 80419, (303) 271-8495
	Drawn By: SAK	Date Created:	STANDARD 22
	Checked By: Staff	Plot Date: 1/13/2025 F.I.R. Date:	ZONE 1: FOOTHILLS/MOUNTAIN AREA PRELIMINARY PAVEMENT DESIGN
	File: STND-22-25.dwg	F.O.R. Date: For Const. Date:	Project No.: – Sheet - Of -
	File Location: G:_CAD\Standards\2023 Road Standards & Templates\Standards (2023)\Drawings\T&E Manual Standards		

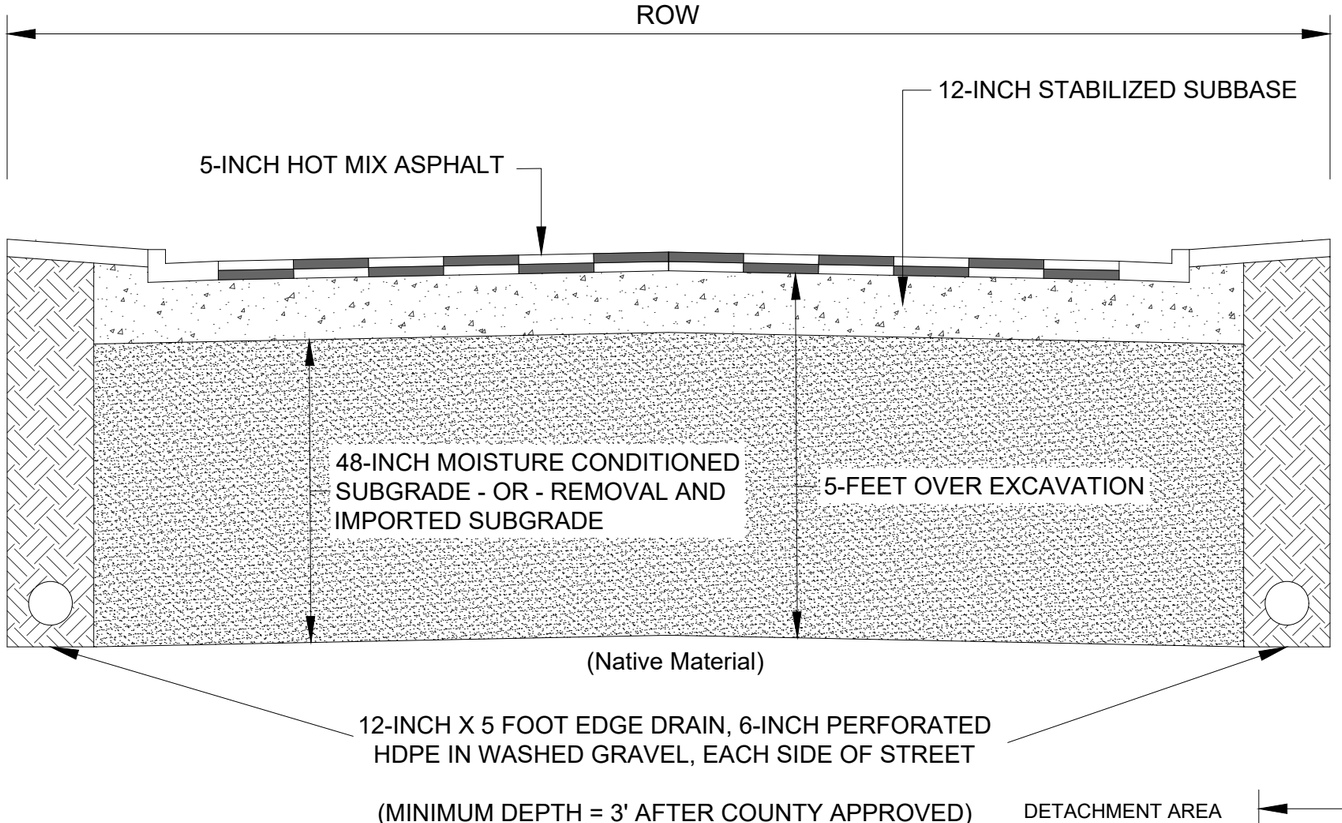

ATTACHED SIDEWALKS

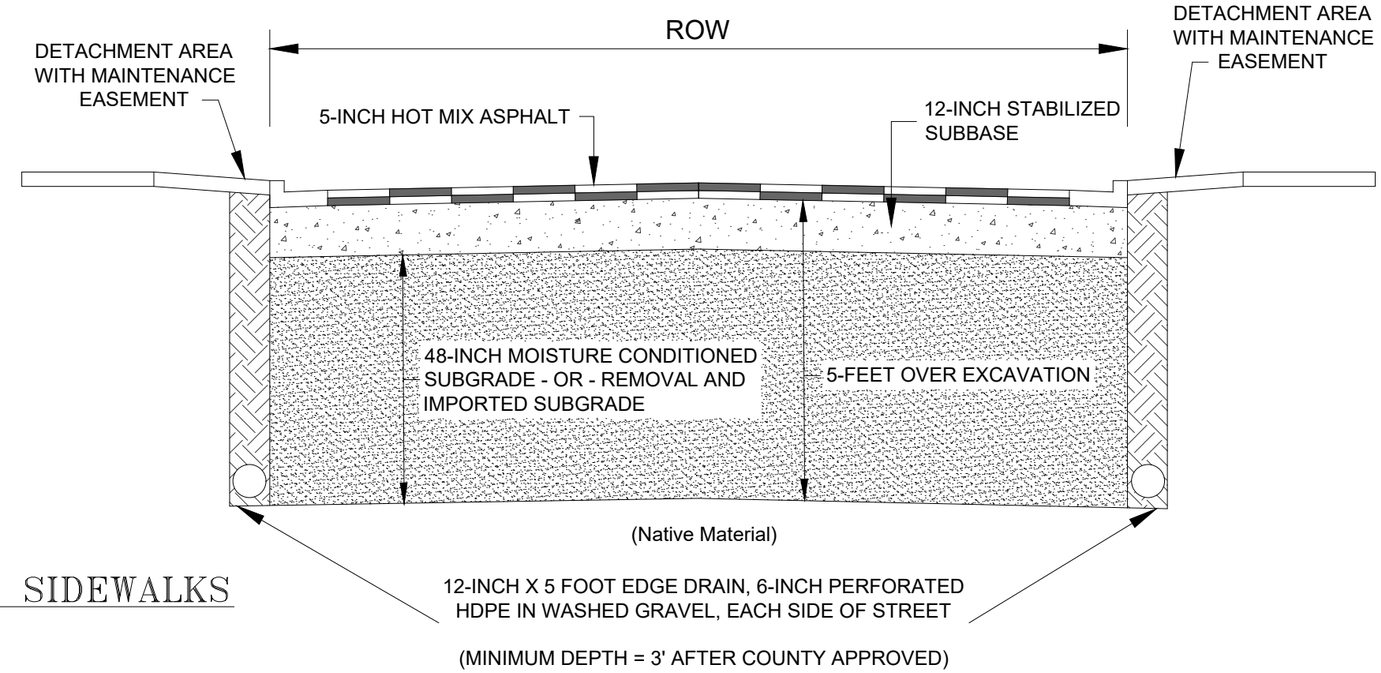

DETACHED SIDEWALKS

Revisions:	Designed By: SAK	Scale: (As Shown)	JEFFERSON COUNTY COLORADO — DIVISION OF Transportation and Engineering, 100 JEFFERSON COUNTY PARKWAY, SUITE 3500, GOLDEN, COLORADO 80419, (303) 271-8495
	Drawn By: SAK	Date Created:	STANDARD 23-1 & 23-2 ZONE 2: DIPPING BEDROCK AREA
	Checked By: Staff	Plot Date: 1/13/2025 F.I.R. Date:	PRELIMINARY PAVEMENT DESIGN ATTACHED & DETACHED SIDEWALKS IN ROW
	File: STND-22-25.dwg	F.O.R. Date: For Const. Date:	Project No.: – Sheet - Of
	File Location: G:_CAD\Standards\2023 Road Standards & Templates\Standards (2023)\Drawings\T&E Manual Standards		

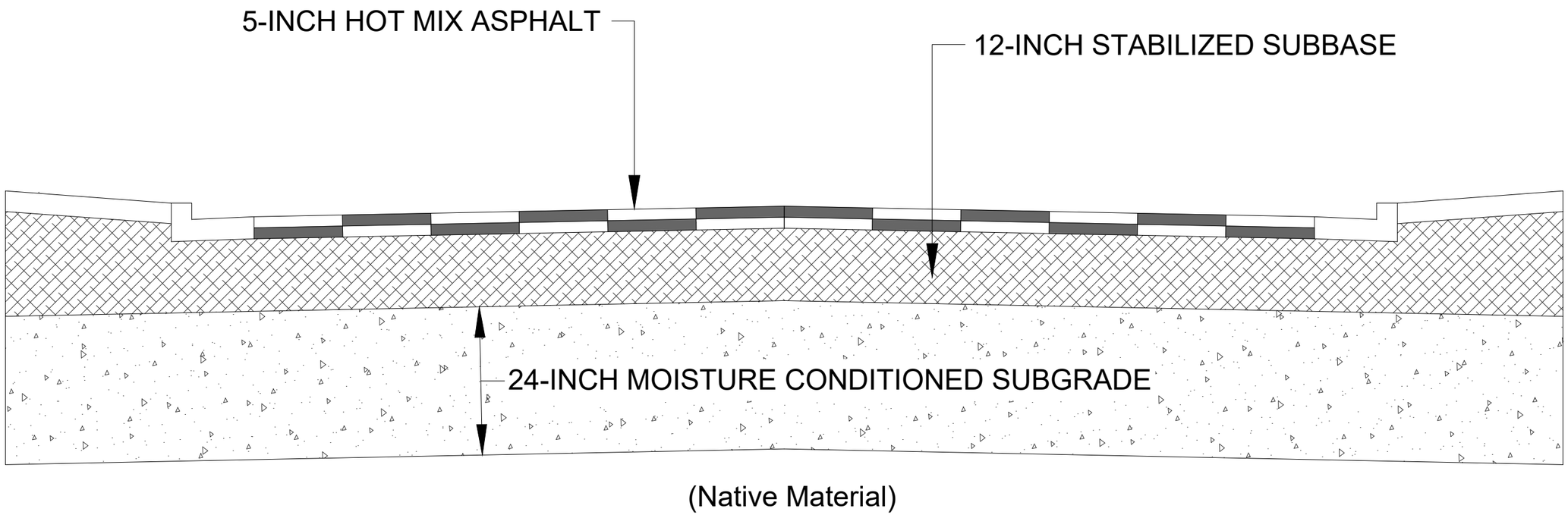

Revisions:	Designed By: SAK	Scale: (As Shown)	JEFFERSON COUNTY COLORADO — DIVISION OF Transportation and Engineering, 100 JEFFERSON COUNTY PARKWAY, SUITE 3500, GOLDEN, COLORADO 80419, (303) 271-8495
	Drawn By: SAK	Date Created:	STANDARD 24
	Checked By: Staff	Plot Date: 1/13/2025 F.I.R. Date:	ZONE 3: FRONT RANGE AREA PRELIMINARY PAVEMENT DESIGN
	File: STND-22-25.dwg	F.O.R. Date: For Const. Date:	Project No.: – Sheet - Of -
	File Location: G:_CAD\Standards\2023 Road Standards & Templates\Standards (2023)\Drawings\T&E Manual Standards		

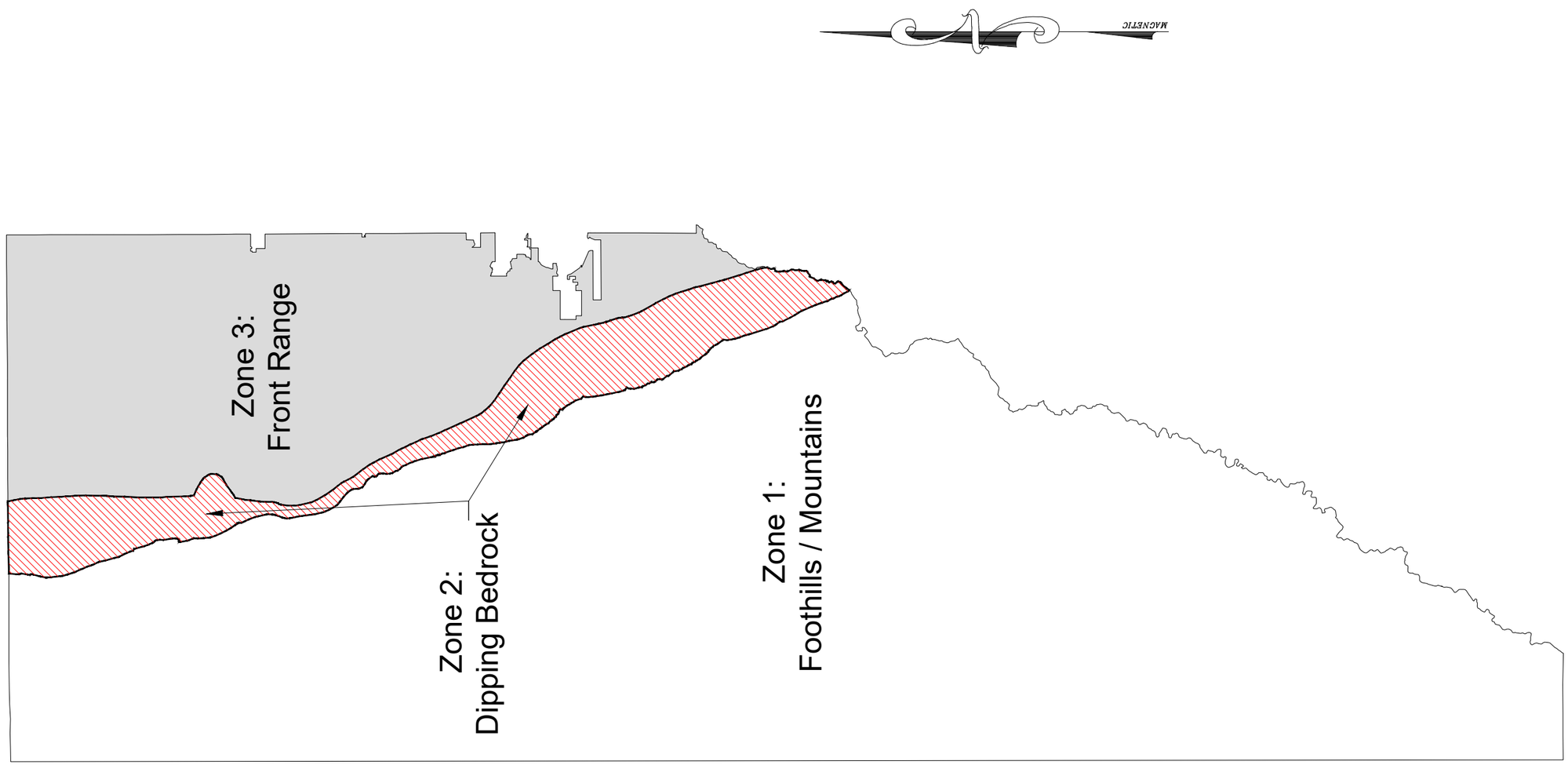

Revisions:	Designed By: SAK	Scale: (As Shown)	
	Drawn By: SAK	Date Created:	
	Checked By: Staff	Plot Date: 1/13/2025	F.I.R. Date:
	File: STND–22–25.dwg	F.O.R. Date:	For Const. Date:
	File Location: G:_CAD\Standards\2023 Road Standards & Templates\Standards (2023)\Drawings\T&E Manual Standards		

JEFFERSON COUNTY COLORADO

DIVISION OF
Transportation and Engineering
100 JEFFERSON COUNTY PARKWAY, SUITE 3500
GOLDEN, COLORADO 80419
(303) 271–8495

STANDARD 25
DESIGN ZONE: PRELIMINARY PAVEMENT SECTIONS

Project No.: – | Sheet - | Of

MATERIAL DATA

COMPONENT	ASTM DESIGNATION	MIN. YIELD (KSI)
TAPERED TUBES	A595 GR.A OR A572	55
PLATES	A36	36
ANCHOR BOLTS	F1554 GR.55	55
GALVANIZING HARDWARE	F2329	
SIGNAL ARM CONN. BOLTS	A325	
LUM. ARM CONN. BOLTS	SAE GR.5	

FINISH DATA

SYSTEM: FINISH PAINT/GALVANIZED (FPGV)

BASE COAT: HOT-DIP GALVANIZED TO ASTM A123

PRIM COAT: NONE

FINISH COAT: NONE/GALVANIZED

COLOR:

SPEC:

DESIGN CRITERIA:

THE SIGNAL MAST ARM TRAFFIC STRUCTURES SHOWN ON THIS DRAWING HAVE BEEN DESIGNED IN ACCORDANCE WITH THE LOADING AND NOMINAL STRENGTH REQUIREMENTS OF THE 2015 AASHTO "LRFD SPECIFICATIONS FOR STRUCTURAL SUPPORTS FOR HIGHWAY SIGNS, LUMINAIRES, AND TRAFFIC SIGNALS, FIRST EDITION" SLTS-1 INCLUDING LATEST INTERIMS. THE WIND LOADS WERE CALCULATED FROM AN ULTIMATE WIND VELOCITY OF 130 MPH WITH A MEAN RECURRENCE INTERVAL OF 1700 YEARS AND AN EFFECTIVE PERFORMANCE TESTED MITIGATION DEVICE ALLOWING FOR A FATIGUE CATEGORY OF Ii. THE FATIGUE LOADS WERE CALCULATED ON THE REQUIREMENTS OF SECTION 11 OF THE CODE, AND THE FOLLOWING DESIGN CONDITIONS:

- STRUCTURES ARE DESIGNED TO RESIST NATURAL WIND GUSTS BASED ON THE YEARLY MEAN WIND VELOCITY OF 11.2 MPH.
- STRUCTURES ARE NOT DESIGNED TO RESIST GALLOPING-INDUCED CYCLIC LOADS DUE TO THE USE OF EFFECTIVE MITIGATION DEVICE.
- STRUCTURES ARE DESIGNED FOR TRUCK-INDUCED GUST LOADS, AS REQUIRED BY THE OWNER OF THE STRUCTURES.

LUMINAIRE ARM DATA		
QTY.	ARM SPAN "L" (FT)	RISE HEIGHT "R"
	15.00	3'-0"

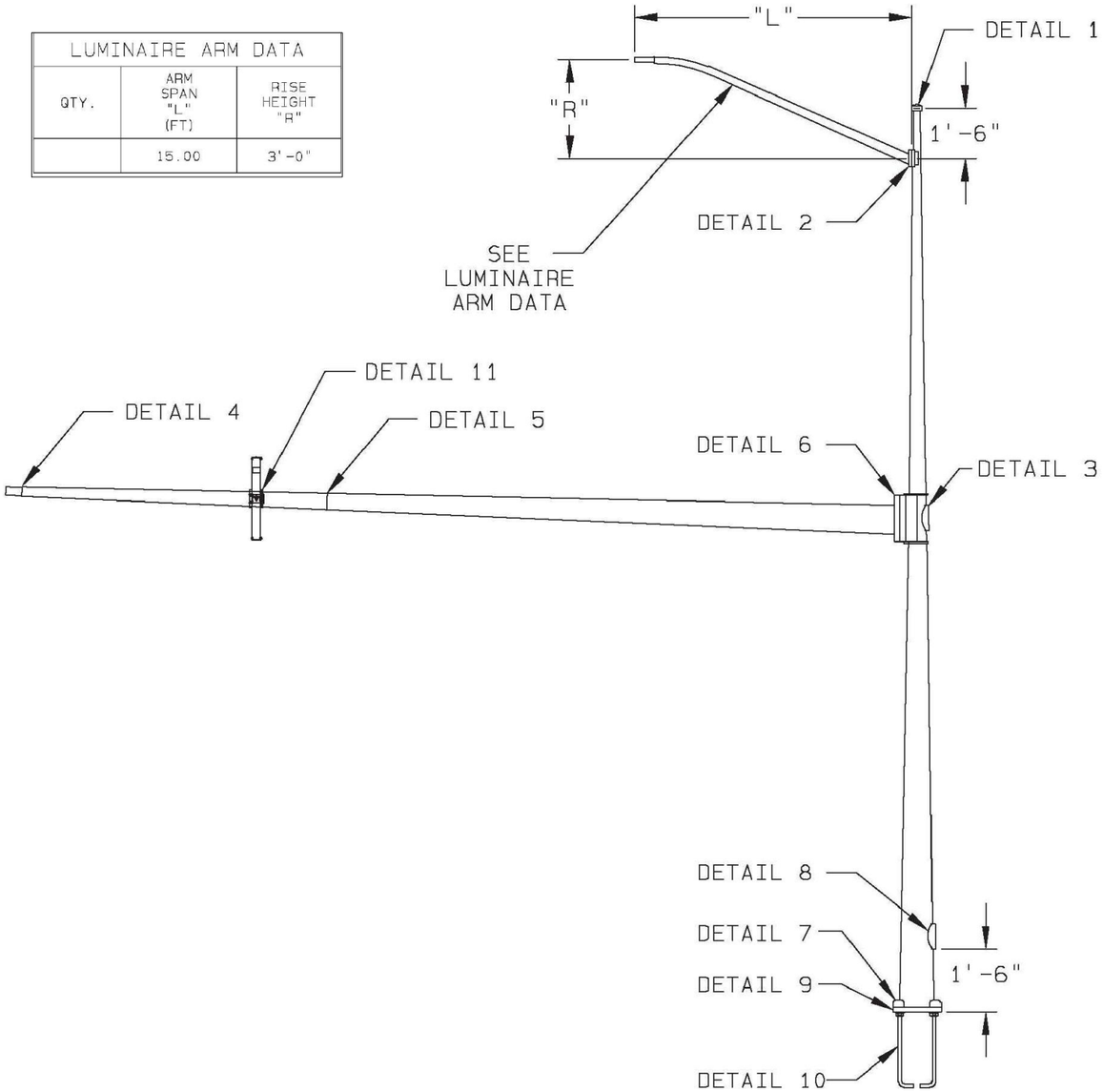

POLE DATA								
				POLE BASE	ANCHOR BOLT			
QTY.	ITEM	DESIGN NUMBER	SINGLE ARM SPAN (FT)	BOLT CIRCLE "Y" (IN)	DIA. "K" (IN)	LENGTH "J" (IN)	HOOK "H" (IN)	THREAD LENGTH "U" (IN)
	LAKEWOOD	1	20	19.00	1.50	54.00	6.00	8.00
	LAKEWOOD	1	25	19.00	1.50	54.00	6.00	8.00
	LAKEWOOD	1	30	19.00	1.50	54.00	6.00	8.00
	LAKEWOOD	2	35	20.00	1.75	84.00	6.00	8.00
	LAKEWOOD	2	40	20.00	1.75	84.00	6.00	8.00
	LAKEWOOD	2	45	20.00	1.75	84.00	6.00	8.00

Revisions:	Designed By: SAK	Scale: (As Shown)	
	Drawn By: SAK	Date Created:	
	Checked By: Staff	Plot Date: 1/13/2025 F.I.R. Date:	
	File: STND-26.dwg	F.O.R. Date: For Const. Date:	
	File Location: G:_CAD\Standards\2023 Road Standards & Templates\Standards (2023)\Drawings\T&E Manual Standards		

JEFFERSON COUNTY COLORADO
DIVISION OF Transportation and Engineering
100 JEFFERSON COUNTY PARKWAY, SUITE 3500
GOLDEN, COLORADO 80419
(303) 271-8495

STANDARD 26-2
SIGNAL POLES GENERAL LAYOUT

Project No.: – Sheet - Of -

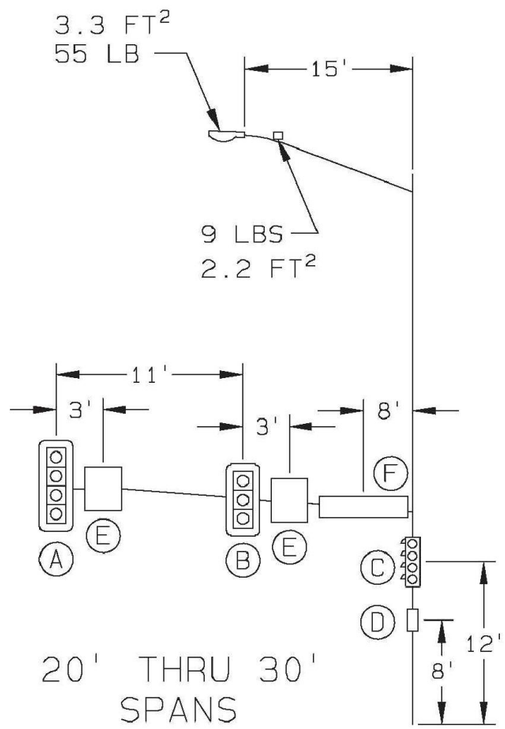

20' THRU 30' SPANS

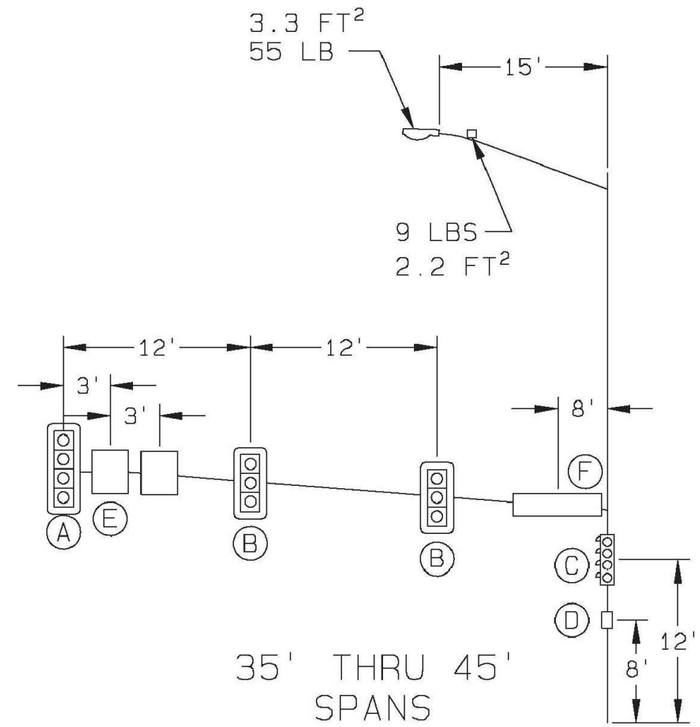

35' THRU 45' SPANS

DEVICE	DESCRIPTION	PROJ. AREA (FT^2)	WEIGHT (LBS)
Ⓐ	12"-4 SEC. SIGNAL WITH BACKPLATE*	11.60	65
Ⓑ	12"-3 SEC. SIGNAL WITH BACKPLATE	8.67	38
Ⓒ	DUAL-12"-4 SEC. SIGNAL NO BACKPLATE (VERTICAL)*	5.44	60
Ⓓ	DUAL-16"-PEDESTRIAN SIGNAL	8.00	80
Ⓔ	30" X 36" REGULATORY SIGN	7.50	25
Ⓕ	18" X 84" STREET NAME SIGN	10.50	32
Ⓖ	TR1 MITIGATOR DEVICE	1.20	38

* SEE TRAFFIC SIGNAL PLANS FOR USE OF 3-SEC OR 4-SEC SIGNAL HEADS

Revisions:	Designed By: SAK	Scale: (As Shown)	JEFFERSON COUNTY COLORADO — DIVISION OF Transportation and Engineering, 100 JEFFERSON COUNTY PARKWAY, SUITE 3500, GOLDEN, COLORADO 80419, (303) 271-8495
	Drawn By: SAK	Date Created:	STANDARD 26-3
	Checked By: Staff	Plot Date: 1/13/2025 F.I.R. Date:	SIGNAL POLES MAXIMUM LOADING INFORMATION (1)
	File: STND-26.dwg	F.O.R. Date: For Const. Date:	Project No.: – Sheet - Of -
	File Location: G:_CAD\Standards\2023 Road Standards & Templates\Standards (2023)\Drawings\T&E Manual Standards		

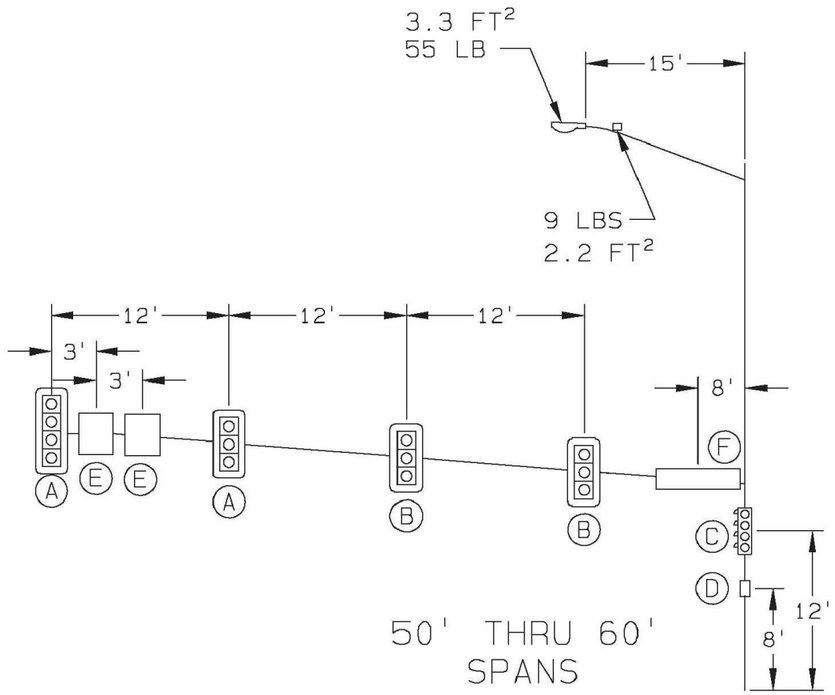

50' THRU 60'
SPANS

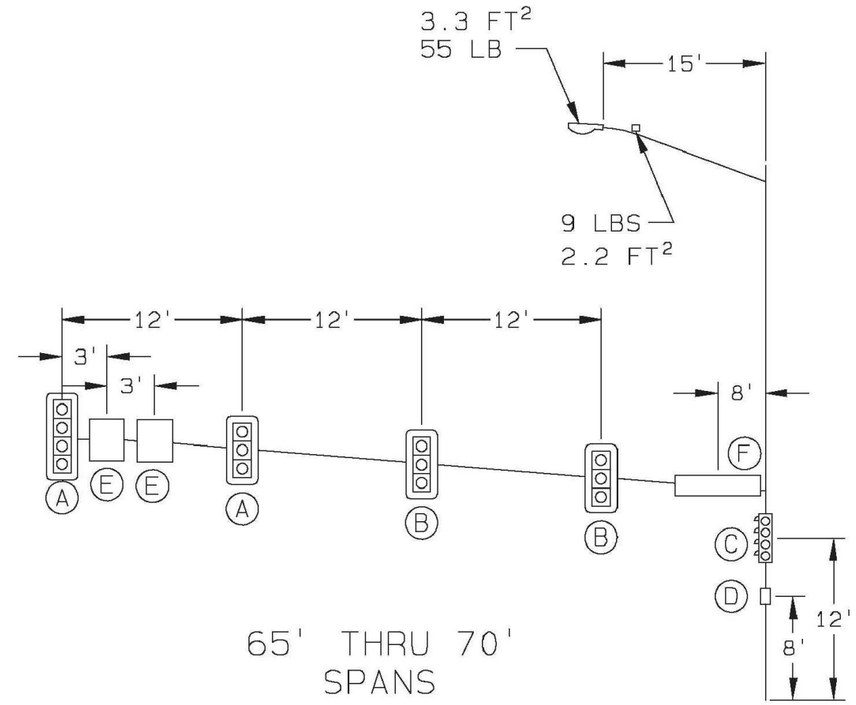

65' THRU 70'
SPANS

DEVICE	DESCRIPTION	PROJ. AREA (FT^2)	WEIGHT (LBS)
Ⓐ	12"-4 SEC. SIGNAL WITH BACKPLATE*	11.60	65
Ⓑ	12"-3 SEC. SIGNAL WITH BACKPLATE	8.67	38
Ⓒ	DUAL-12"-4 SEC. SIGNAL NO BACKPLATE (VERTICAL)*	5.44	60
Ⓓ	DUAL-16"-PEDESTRIAN SIGNAL	8.00	80
Ⓔ	30" X 36" REGULATORY SIGN	7.50	25
Ⓕ	18" X 84" STREET NAME SIGN	10.50	32
Ⓖ	TR1 MITIGATOR DEVICE	1.20	38

* SEE TRAFFIC SIGNAL PLANS FOR USE OF 3-SEC OR 4-SEC SIGNAL HEADS

Revisions:	Designed By: SAK	Scale: (As Shown)	
	Drawn By: SAK	Date Created:	
	Checked By: Staff	Plot Date: 1/13/2025	F.I.R. Date:
	File: STND-26.dwg	F.O.R. Date:	For Const. Date:
	File Location: G:_CAD\Standards\2023 Road Standards & Templates\Standards (2023)\Drawings\T&E Manual Standards		

JEFFERSON COUNTY COLORADO
DIVISION OF
Transportation and Engineering
100 JEFFERSON COUNTY PARKWAY, SUITE 3500
GOLDEN, COLORADO 80419
(303) 271-8495

SIGNAL STANDARD 26-4
SIGNAL POLES MAXIMUM LOADING INFORMATION (2)

Project No.: – | Sheet - | Of -

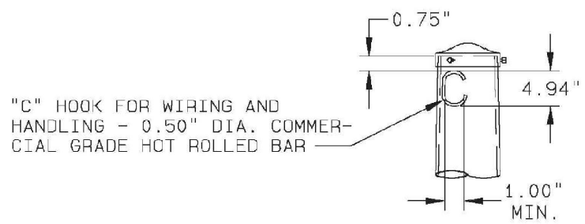

DETAIL 1 | POLE TOP

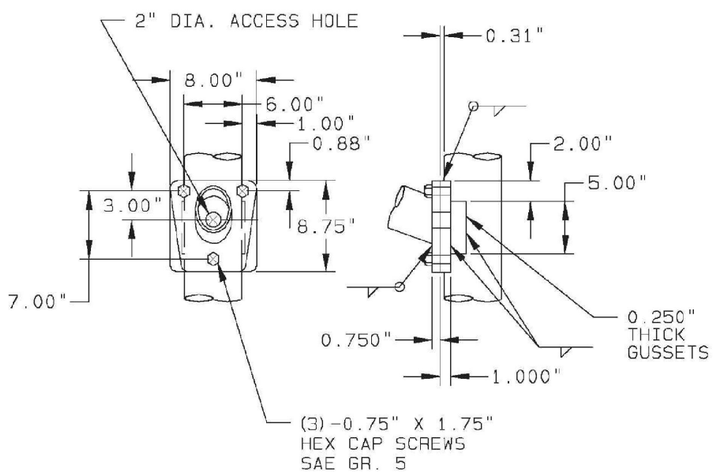

DETAIL 2 | LUMINAIRE ARM ATTACHMENT

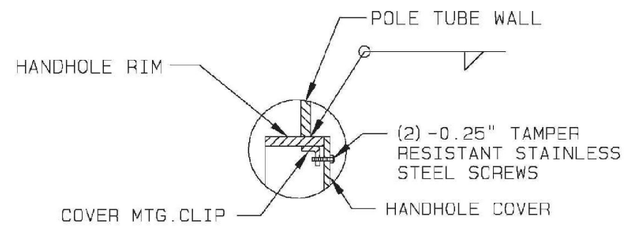

SECTION A-A

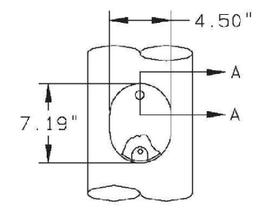

DETAIL 3 | HANDHOLE

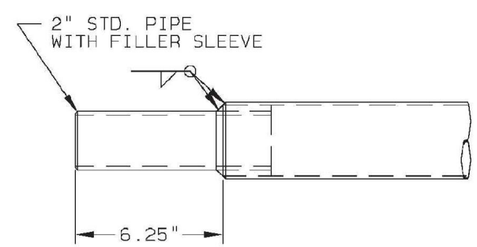

DETAIL 4 | SIGNAL ARM END TENON

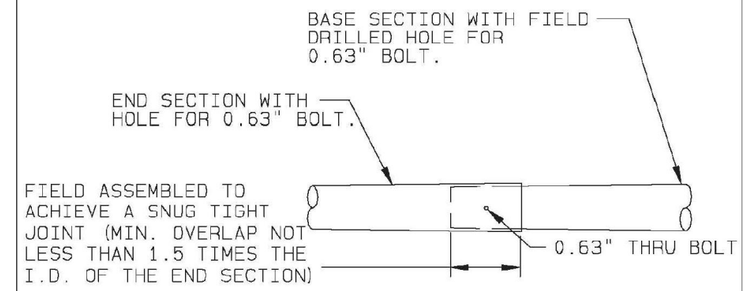

SPAN	BASE SECTION	END SECTION	
	LENGTH	LENGTH	GAUGE
50.00'	26.43'	26.08'	7
55.00'	23.88'	33.81'	3
60.00'	23.88'	38.82'	3
65.00'	27.52'	40.24'	3
70.00'	27.52'	45.25'	3

DETAIL 5 | SIGNAL ARM SLIP JOINT

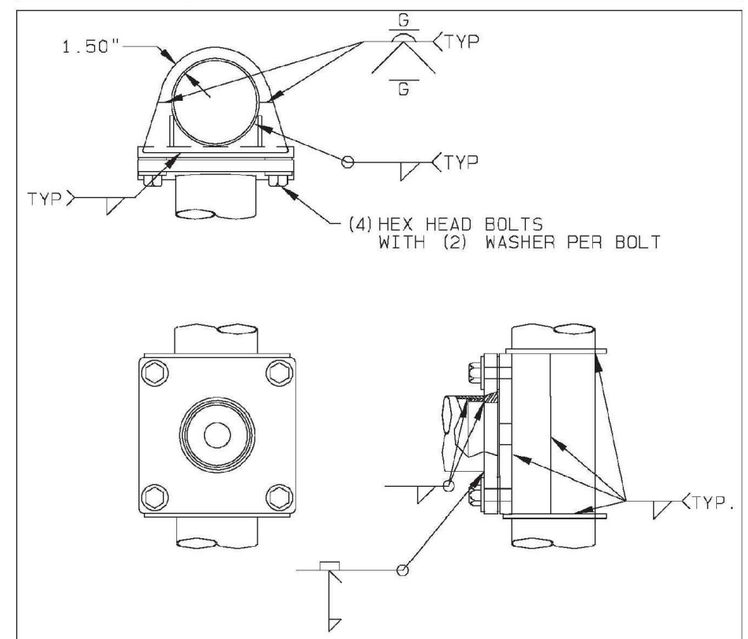

DETAIL 6 | SIGNAL ARM ATTACHMENT

Revisions:	Designed By: SAK	Scale: (As Shown)	
	Drawn By: SAK	Date Created:	
	Checked By: Staff	Plot Date: 1/13/2025	F.I.R. Date:
	File: STND-26.dwg	F.O.R. Date:	For Const. Date:
	File Location: G:_CAD\Standards\2023 Road Standards & Templates\Standards (2023)\Drawings\T&E Manual Standards		

JEFFERSON COUNTY COLORADO

DIVISION OF Transportation and Engineering
100 JEFFERSON COUNTY PARKWAY, SUITE 3500
GOLDEN, COLORADO 80419
(303) 271-8495

STANDARD 26-5
SIGNAL POLES DETAILS (1)

Project No.: – | Sheet - | Of -

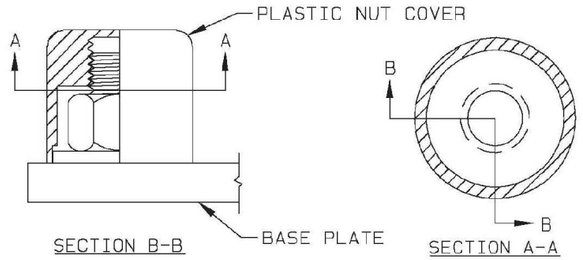

DETAIL 7 | NUT COVER

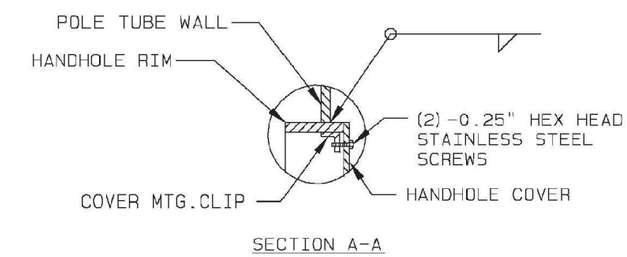

DETAIL 8 | HANDHOLE

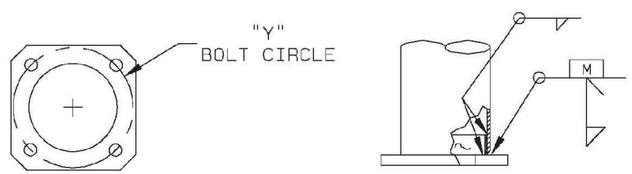

DETAIL 9 | POLE BASE

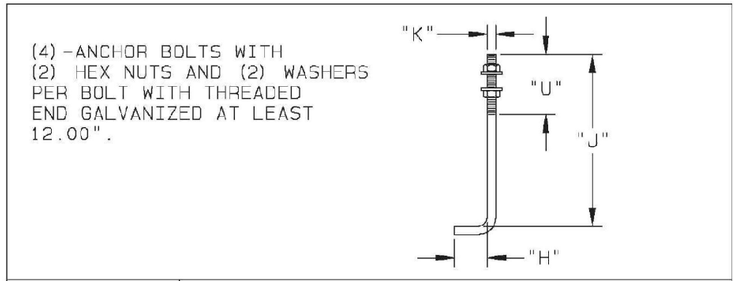

DETAIL 10 | ANCHOR BOLT

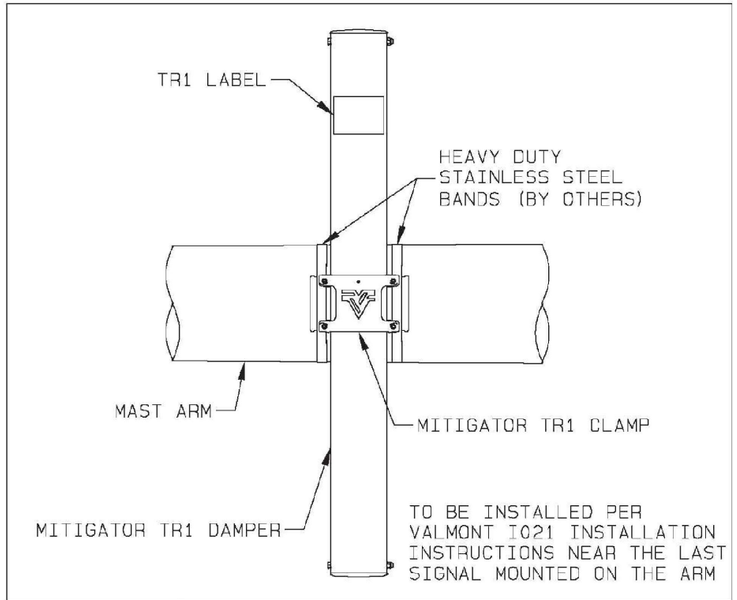

DETAIL 11 | TR1 MITIGATOR

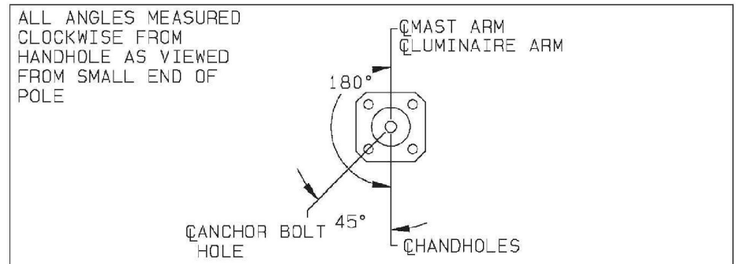

RADIAL INDEX

ALTHOUGH RARE, VIBRATIONS SEVERE ENOUGH TO CAUSE DAMAGE CAN OCCASIONALLY OCCUR IN STRUCTURES OF ALL TYPES. BECAUSE THEY ARE INFLUENCED BY MANY INTERACTING VARIABLES, VIBRATIONS ARE GENERALLY UNPREDICTABLE. THE USER'S MAINTENANCE PROGRAM SHOULD INCLUDE OBSERVATION FOR EXCESSIVE VIBRATION AND EXAMINATION FOR ANY STRUCTURAL DAMAGE OR BOLT LOOSENING. THE VALMONT WARRANTY SPECIFICALLY EXCLUDES FATIGUE FAILURE OR SIMILAR PHENOMENA RESULTING FROM INDUCED VIBRATION, HARMONIC OSCILLATION OR RESONANCE ASSOCIATED WITH MOVEMENT OF AIR CURRENTS AROUND THE PRODUCT.

VIBRATION DISCLAIMER

Revisions:	Designed By: SAK	Scale: (As Shown)	
	Drawn By: SAK	Date Created:	
	Checked By: Staff	Plot Date: 1/13/2025	F.I.R. Date:
	File: STND-26.dwg	F.O.R. Date:	For Const. Date:
	File Location: G:_CAD\Standards\2023 Road Standards & Templates\Standards (2023)\Drawings\T&E Manual Standards		

JEFFERSON COUNTY COLORADO
DIVISION OF Transportation and Engineering
100 JEFFERSON COUNTY PARKWAY, SUITE 3500
GOLDEN, COLORADO 80419
(303) 271-8495

STANDARD 26-6
SIGNAL POLES DETAILS (2)

Project No.: – | Sheet - | Of -

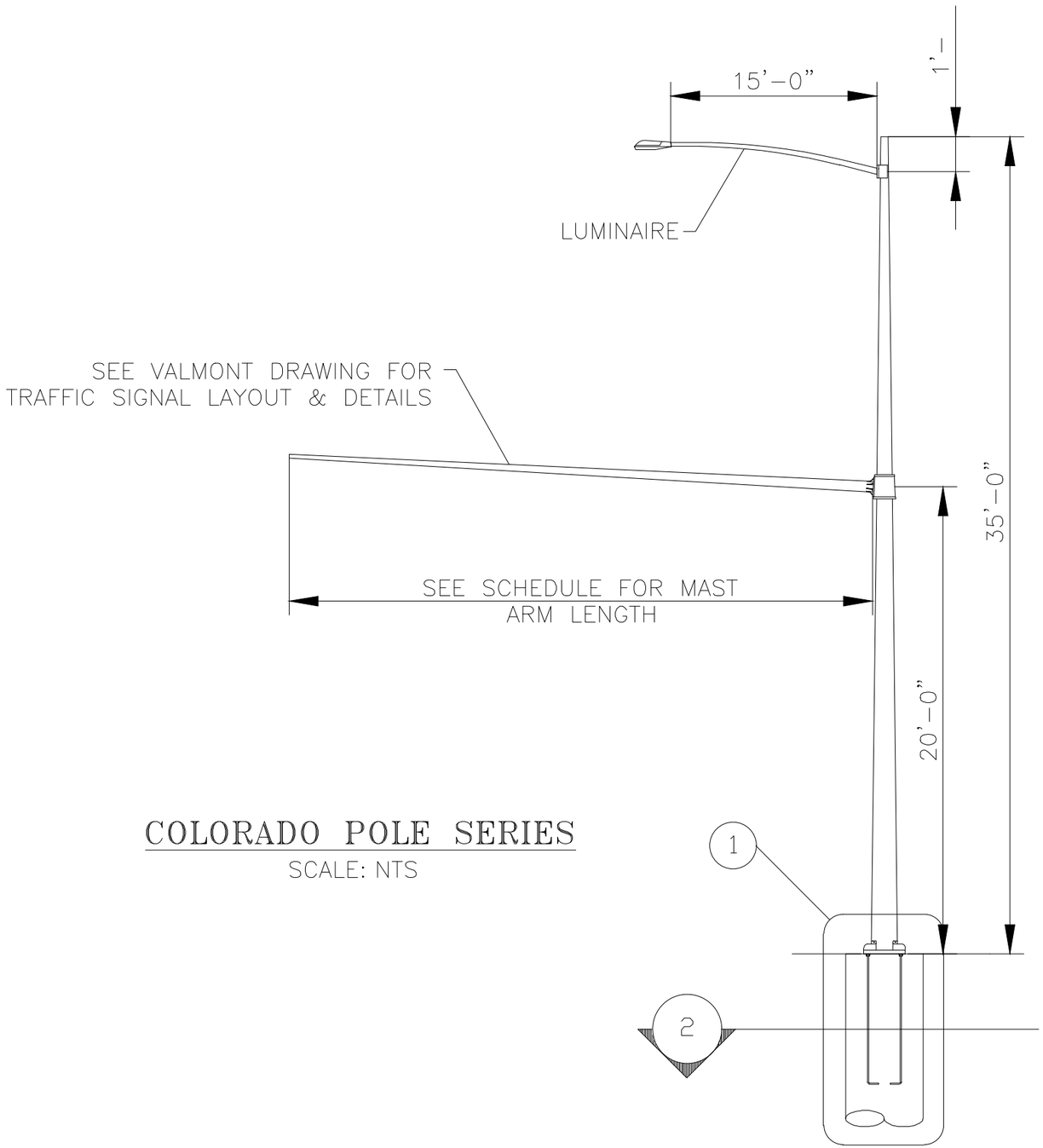

COLORADO POLE SERIES

SCALE: NTS

FOUNDATION SCHEDULE					
MAST ARM LENGTH (FT.)	CAISSON DATA				
	DIA. (IN.)	DEPTH (D) (FT.)	PAY LENGTH (L) (FT.)	V BARS	
				SIZE	TOTAL
20–30	36	13.0	13.5	#9	10
35–45	42	15.0	15.5	#9	14
50–60	48	18.0	18.5	#9	18
65–70	48	20.5	21.0	#9	18

Revisions:	Designed By: SAK	Scale: (As Shown)	
	Drawn By: SAK	Date Created:	
	Checked By: Staff	Plot Date: 1/13/2025 F.I.R. Date:	
	File: STND–26.dwg	F.O.R. Date: For Const. Date:	
	File Location: G:_CAD\Standards\2023 Road Standards & Templates\Standards (2023)\Drawings\T&E Manual Standards		

JEFFERSON COUNTY COLORADO

DIVISION OF
Transportation and Engineering
100 JEFFERSON COUNTY PARKWAY, SUITE 3500
GOLDEN, COLORADO 80419
(303) 271–8495

STANDARD 26–7
SIGNAL POLES CAISSON DETAILS (1)

Project No.: – Sheet - Of -

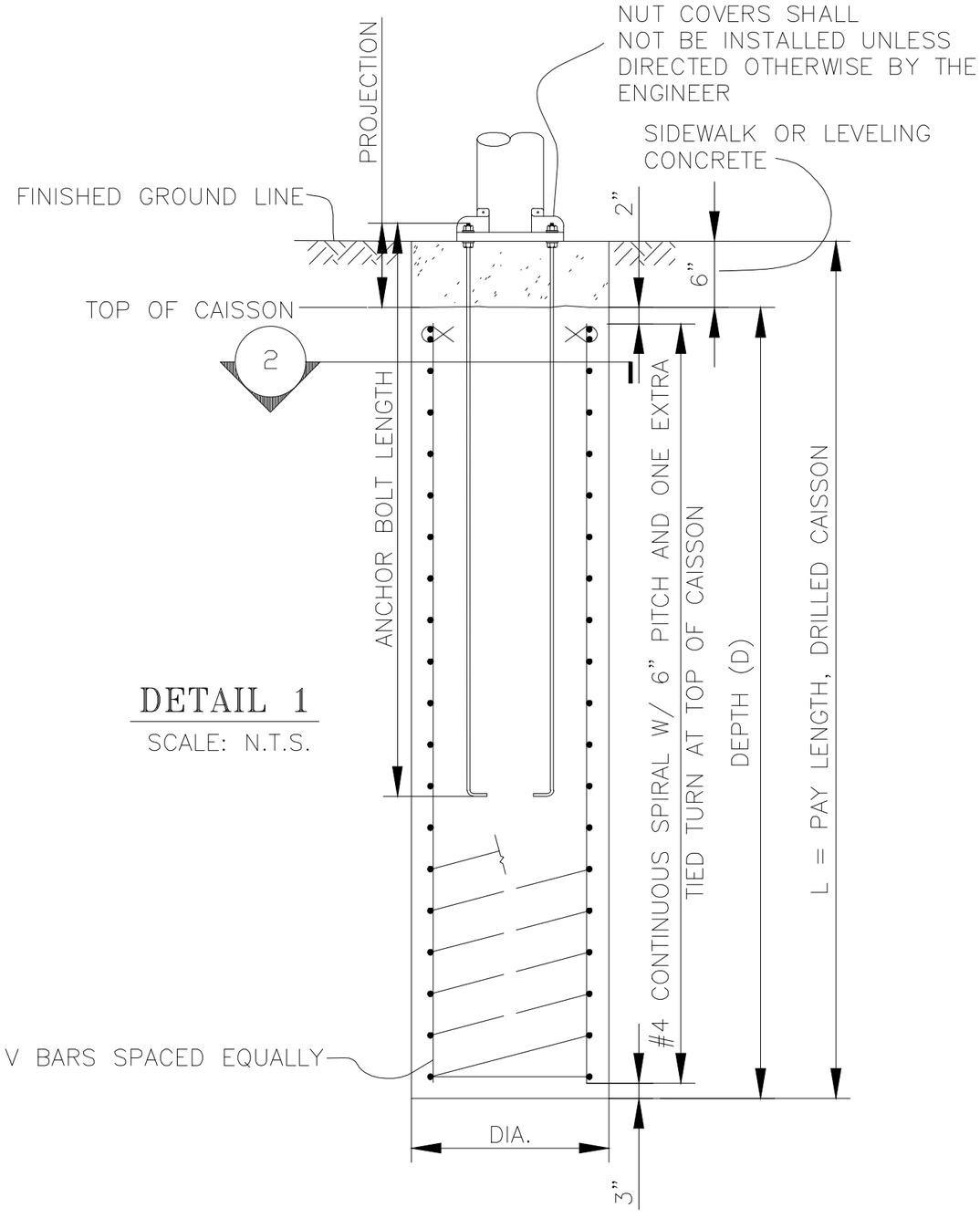

DETAIL 1

SCALE: N.T.S.

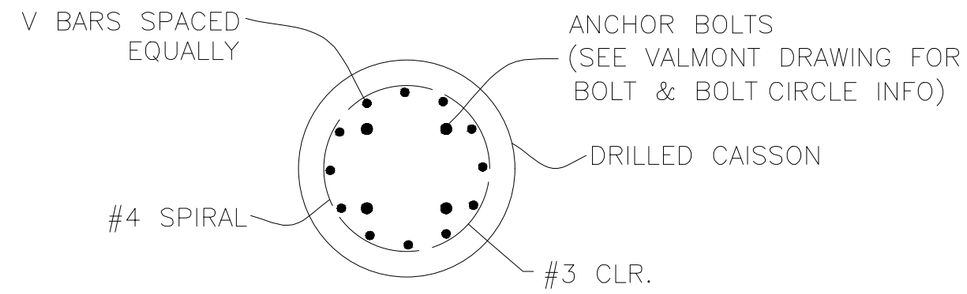

DETAIL 2

SCALE: N.T.S.

Revisions:	Designed By: SAK	Scale: (As Shown)	
	Drawn By: SAK	Date Created:	
	Checked By: Staff	Plot Date: 1/13/2025 F.I.R. Date:	
	File: STND-26.dwg	F.O.R. Date: For Const. Date:	
	File Location: G:_CAD\Standards\2023 Road Standards & Templates\Standards (2023)\Drawings\T&E Manual Standards		

JEFFERSON COUNTY COLORADO

DIVISION OF Transportation and Engineering
100 JEFFERSON COUNTY PARKWAY, SUITE 3500
GOLDEN, COLORADO 80419
(303) 271-8495

STANDARD 26-8

SIGNAL POLES CAISSON DETAILS (2)

Project No.: – Sheet - Of -

GENERAL NOTES

1. DESIGN OF FOUNDATIONS IS BASED ON TRAFFIC SIGNAL POLE CONFIGURATIONS PROVIDED BY VALMONT INDUSTRIES, INC. DRAWING NO, TK01274 DATED 11/06/18 FOR THE CITY OF WESTMINSTER. REFER TO JEFFERSON COUNTY TRAFFIC STANDARD DRAWINGS FOR ANY ADDITIONAL TRAFFIC POLE INFORMATION.

2. DESIGN CRITERIA: AASHTO – STANDARD SPECIFICATIONS FOR STRUCTURAL SUPPORTS FOR HIGHWAY SIGNS, LUMINAIRES AND TRAFFIC SIGNALS, 2015 EDITION.

3. A DESIGN WIND VELOCITY OF 130 MPH HAS BEEN USED FOR THE DESIGNS HEREIN (BASED ON INFORMATION FROM VALMONT). CAISSONS ARE DESIGNED FOR BASE REACTIONS PROVIDED BY VALMONT.

4. ALL FOUNDATIONS ON THIS SHEET ARE FOR SINGLE MAST ARM POLES.

5. THE DESIGNS HEREIN ASSUME THAT SIGNALS ARE INSTALLED WITHIN THE ROADWAY PRISM WITH THE FOLLOWING SOIL PARAMETERS:
   - 5.1. SOIL DENSITY = 110 LB./CU.FT.
   - 5.2. SOIL COHESION = 750 LB./SQ/FT/ FOR MEDIUM STIFF COHESIVE SOIL
   - 5.3. SOIL ø ANGLE = 30° FOR MEDIUM DENSE COHESIONLESS SOIL
   - 5.4. SF = 1.5 FOR TORSIONAL RESISTANCE; 3.0 FOR FLEXURAL RESISTANCE

6. CONTACT THE ENGINEER IF ANY OF THE FOLLOWING SOIL CONDITIONS ARE ENCOUNTERED DURING DRILLING:
   - 6.1. SIGNALS WILL NOT BE INSTALLED WITHIN THE ROADWAY PRISM
   - 6.2. THE SOIL HAS A HIGH ORGANIC CONTENT OR CONSISTS OF SATURATED SILT AND CLAY
   - 6.3. THE SITE WON'T SUPPORT THE WEIGHT OF THE DRILLING RIG
   - 6.4. THE FOUNDATION SOILS ARE NOT HOMOGENOUS
   - 6.5. FIRM BEDROCK IS ENCOUNTERED
   - 6.6. CAVING SOILS
   - 6.7. GROUNDWATER
   - 6.8. EXPANSIVE SOILS
   - 6.9. TRASH
   - 6.10. BOTTOM OF CAISSON WILL EXTEND BELOW BOTTOM OF ANY ADJACENT BUILDING OR RETAINING WALL FOUNDATION
   - 6.11. SLOPES GREATER THAN 10%

7. CAISSONS SHALL BE PLACED AGAINST UNDISTURBED EARTH.

8. CAISSONS SHALL BE CONSTRUCTED WITH AIR ENTRAINED CDOT CLASS B2 CONCRETE. REINFORCING STEEL SHALL BE GRADE 60.

9. FOUNDATION TO BE PROVIDED WITH 2 CONDUIT STUB OUTS. DIRECTION TO BE DETERMINED BY A JEFFERSON COUNTY ENGINEER AND IS TO BE CONSIDERED PART OF THE POLE INSTALLATION BID ITEM.

10. ANCHOR BOLTS. BASE PLATE, NUTS, AND NUT COVERS TO BE FURNISHED BY THE POLE MANUFACTURER.

11. CAISSON CONCRETE SHALL CURE AT LEAST SEVEN DAYS PRIOR TO THE SIGNAL STRUCTURE INSTALLATION.

12. PLUMBING OF POLES SHALL BE ACCOMPLISHED BY ADJUSTING NUTS AFTER LOADING OF MAST ARM.

13. EACH END OF CAISSON TIES TO BE TERMINATED WITH A 135° HOOK AROUND A LONGITUDINAL BAR.

14. DESIGN IS BASED ON HORIZONTAL GROUND SURFACE CONDITION IN THE VICINITY OF THE CAISSON. CAISSONS SHOULD NOT BE INSTALLED AT SITES WITH A SLOPE EXCEEDING 10 PERCENT.

15. LEVELING CONCRETE SHALL BE 3,000 PSI CLASS B AIR ENTRAINED CONCRETE.

16. YIELD STRESS OF REINFORCING STEEL SHALL BE MINIMUM 60,000 PSI.

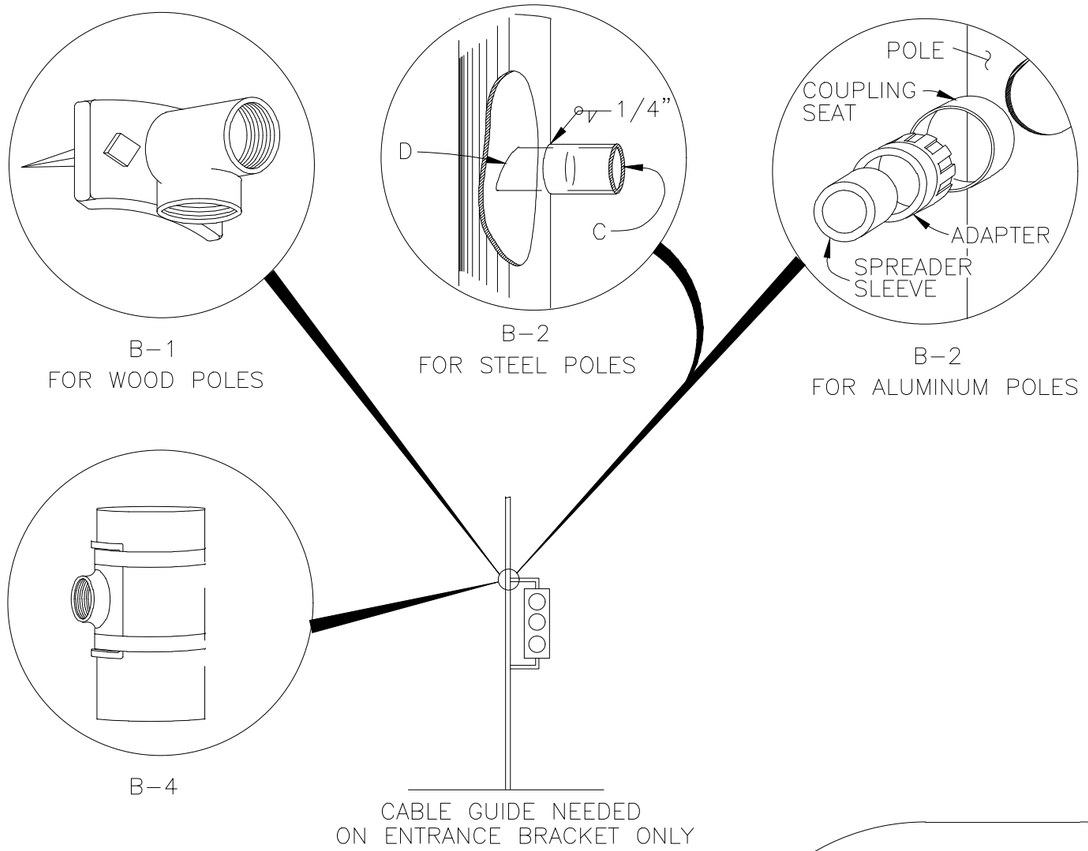

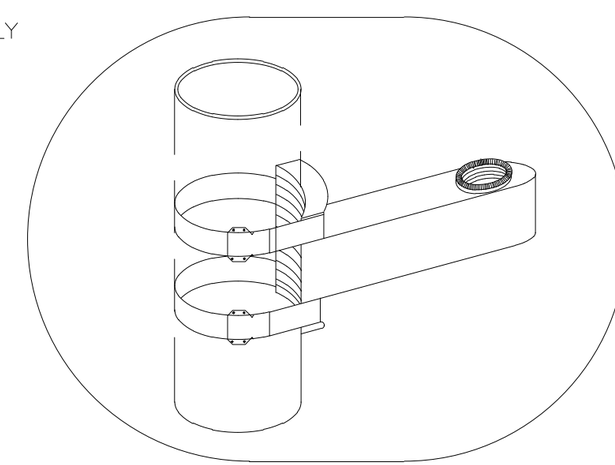

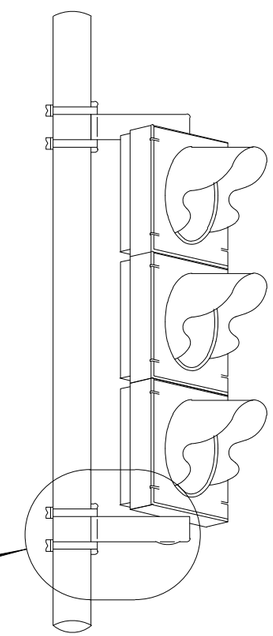

KEY

C – 2 INCH PIPE COUPLING

D – CABLE GUIDE. 2 INCH PIPE SHOWN. REMOVE ALL BURRS AND SHARP EDGES.

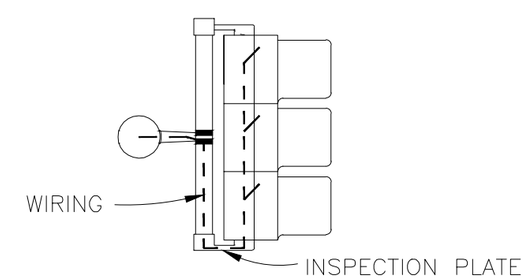

WIRING DIAGRAM

Revisions:	Designed By: SAK	Scale: (As Shown)	
	Drawn By: SAK	Date Created:	
	Checked By: Staff	Plot Date: 1/13/2025	F.I.R. Date:
	File: STND-26.dwg	F.O.R. Date:	For Const. Date:
	File Location: G:_CAD\Standards\2023 Road Standards & Templates\Standards (2023)\Drawings\T&E Manual Standards		

JEFFERSON COUNTY COLORADO

DIVISION OF
Transportation and Engineering
100 JEFFERSON COUNTY PARKWAY, SUITE 3500
GOLDEN, COLORADO 80419
(303) 271-8495

STANDARD 26-10

SIGNAL POLE & MAST ARM MOUNTING DETAILS (1)

Project No.: – | Sheet - | Of -

GENERAL NOTES:

1. PIPE COUPLINGS FOR SIGNAL BRACKETS SHALL BE EITHER 1-1/2 OR 2 INCH DEPENDING UPON THE SIGNAL HEAD TO BE INSTALLED. SIGNAL BRACKETS SHALL BE FURNISHED BY THE MANUFACTURER OF THE SIGNAL HEADS.

2. UNLESS OTHERWISE SPECIFIED, ALL TRAFFIC SIGNALS MOUNTED ABOVE THE ROADWAY SHALL HAVE A HEIGHT OF 17'-6", ALL SIDE MOUNTED TRAFFIC SIGNALS SHALL HAVE A HEIGHT OF 10', AND PEDESTRIAN SIGNALS AT A HEIGHT OF 8' AS MEASURED TO THE BOTTOM OF THE SIGNAL HEAD HOUSING OR BRACKET.

3. ALL SIGNAL HEADS SHALL BE MOUNTED IN SUCH A MANNER AS TO BE EASILY REMOVED FROM THEIR SUPPORTING STRUCTURE.

4. GASKET SEALING COMPOUND SHALL BE USED IN ADDITION TO ANY LEAD WASHERS REQUIRED FOR CREATING A WATER-TIGHT CONNECTION BETWEEN THE SIGNAL HEAD AND MOUNTING BRACKET.

5. SIGNAL HEADS SHALL BE SECURELY AFFIXED BY THE USE OF A SERRATED COUPLING OR OTHER ACCESSORIES RECOMMENDED BY THE SIGNAL MANUFACTURER.

6. WIRING FROM INSIDE MAST ARM THROUGH 1" FIELD DRILLED HOLE IN ARM, SHALL BE BROUGHT THROUGH THE MOUNTING SUPPORT TUBE AND LOWER ARM (AS SHOWN). FIELD DRILLED HOLES SHALL HAVE RUBBER GROMMETS INSTALLED.

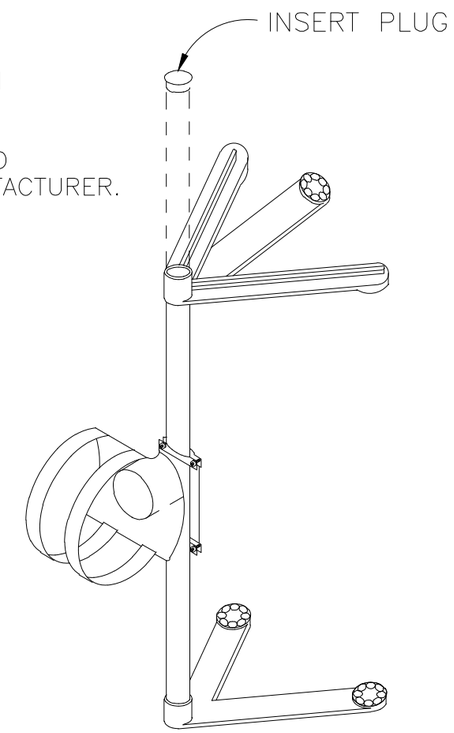

MA 5-1
MOUNTING
HARDWARE

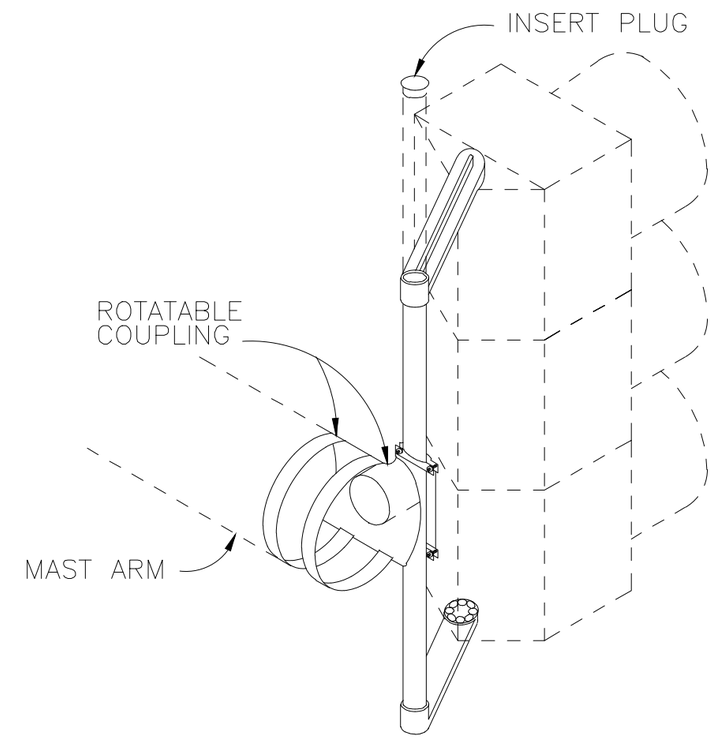

MA 5 ADJUSTABLE
MAST ARM MOUNTING
HORIZONTAL OR VERTICAL
INSTALLATION

Revisions:	Designed By: SAK	Scale: (As Shown)	JEFFERSON COUNTY COLORADO — DIVISION OF Transportation and Engineering, 100 JEFFERSON COUNTY PARKWAY, SUITE 3500, GOLDEN, COLORADO 80419, (303) 271-8495
	Drawn By: SAK	Date Created:	STANDARD 26-11
	Checked By: Staff	Plot Date: 1/13/2025 F.I.R. Date:	SIGNAL POLE & MAST ARM MOUNTING DETAILS (2)
	File: STND-26.dwg	F.O.R. Date: For Const. Date:	Project No.: – Sheet - Of -
	File Location: G:_CAD\Standards\2023 Road Standards & Templates\Standards (2023)\Drawings\T&E Manual Standards		

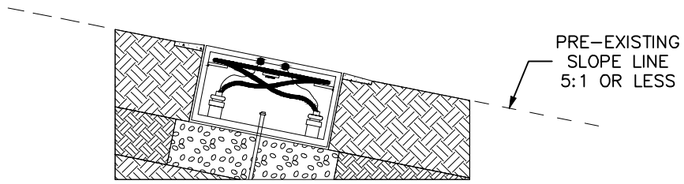

TYPICAL INSTALLATION
ON SLOPES 5:1 OR LESS

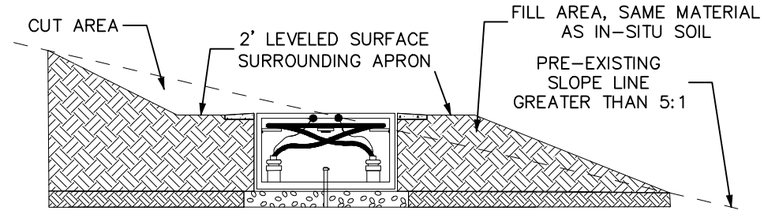

TYPICAL INSTALLATION
ON SLOPES GREATER THAN 5:1

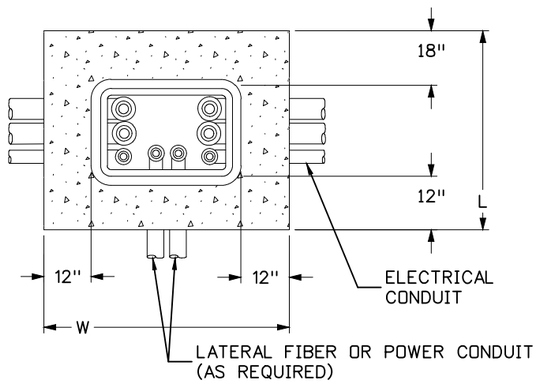

TOP VIEW

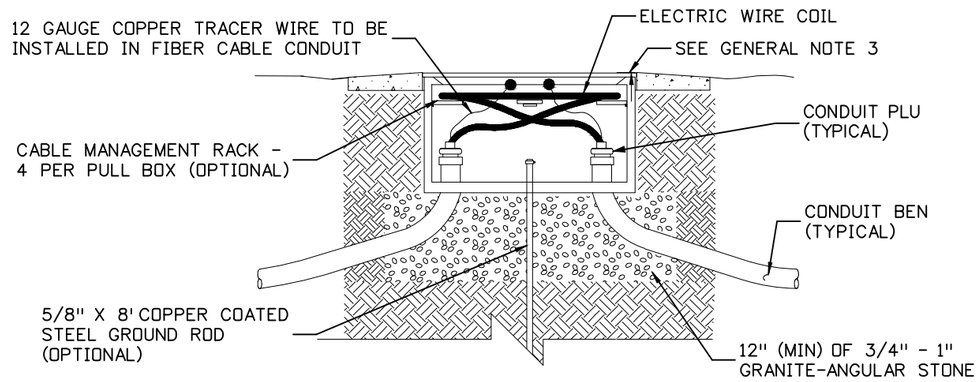

CROSS SECTION

PULL BOX DETAIL
FOR ALL SIZES (SEE TABLE OF DIMENSIONS)
(NOT TO SCALE)

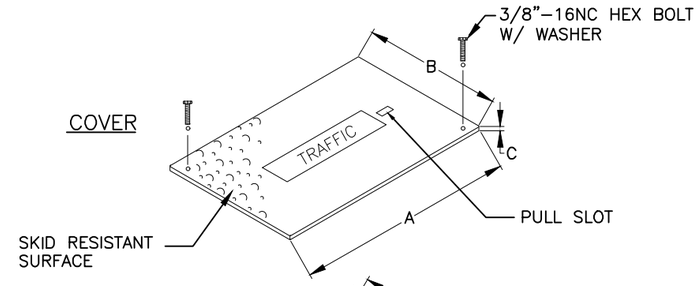

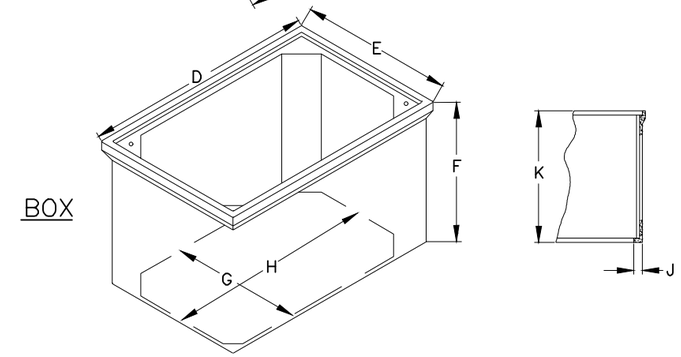

FIBERGLASS REINFORCED POLYMER CONCRETE DESIGNED FOR
FULL VEHICULAR TRAFFIC (20,000 LB. LOADING, TIER 22)

PRECAST PULL BOX FOR USE IN CONCRETE/ASPHALT/
SIDEWALK AREAS BEHIND CURB

ALTERNATE PULLBOX SIZES AND MATERIALS MAY BE APPROVED BY THE ENGINEER

GENERAL NOTES:

1. PULL BOX DETAIL NOTES:
   A. PULL BOXES SHALL HAVE A 12-INCH WIDE MINIMUM BY 6-INCH DEEP PRE-CAST POLYMER CONCRETE APRON, EXCEPT WHEN INSTALLED AT A SIDEWALK, SLOPED AWAY FROM THE PULL BOX OPENING. THE GAP BETWEEN THE APRON AND OUTER WALL SHALL BE A MAXIMUM OF 1/4 INCH. THE COST OF THE CONCRETE APRON SHALL BE PAID FOR AS PART OF THE PULL BOX ITEM.
   B. THE PULL BOX LID SHALL BE FLUSH WITH THE SURFACE.

TABLE OF DIMENSIONS (MINIMUMS)

DESCRIPTION	SIZE LENGTH x WIDTH x DEPTH (IN.)	TO BE USED AT
LARGE	30x48x24	CONTROLLER CABINET, HOME RUN
MEDIUM	24x36x24	TRAFFIC SIGNAL POLE
SMALL	17x30x18	UPSTREAM DETECTOR SPLICES, INTERCONNECT

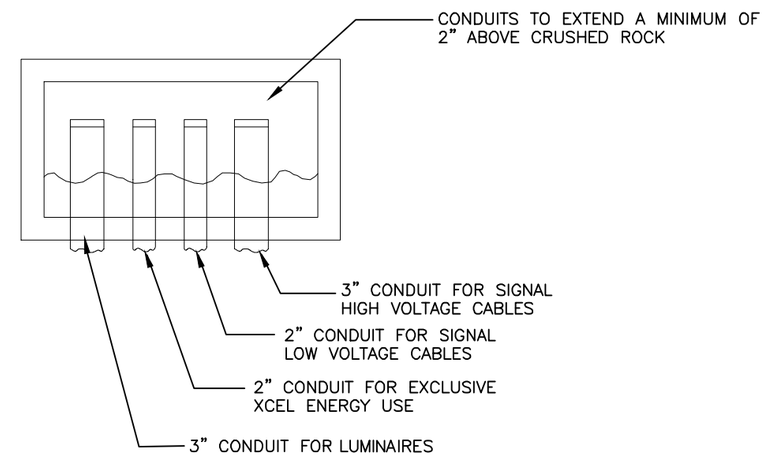

TYPICAL PULL BOX

Revisions:	Designed By: SAK	Scale: (As Shown)	
	Drawn By: SAK	Date Created:	
	Checked By: Staff	Plot Date: 1/13/2025	F.I.R. Date:
	File: STND-26 [SIGNAL POLES].dwg	F.O.R. Date:	For Const. Date:
	File Location: G:_CAD\Standards\2025 Road Standards & Templates\Standards (2025)\Drawings		

JEFFERSON COUNTY COLORADO
DIVISION OF Transportation and Engineering
100 JEFFERSON COUNTY PARKWAY, SUITE 3500
GOLDEN, COLORADO 80419
(303) 271-8495

STANDARD 26-12
TRAFFIC SIGNAL PULL BOX

Project No.: – | Sheet - | Of -

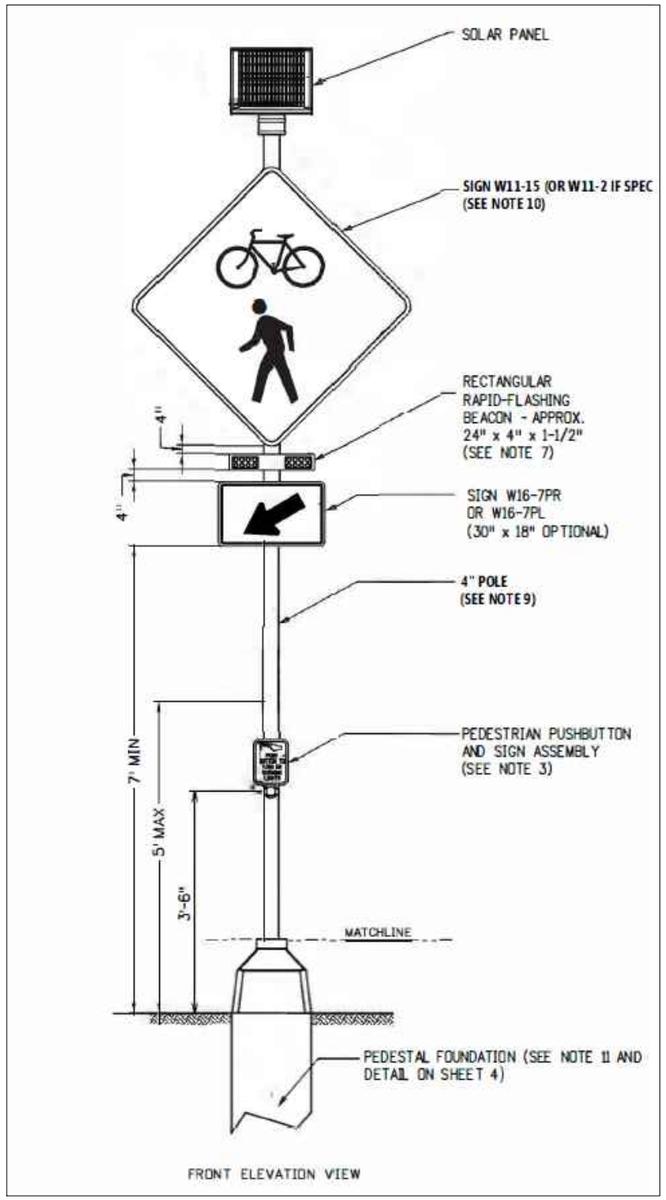

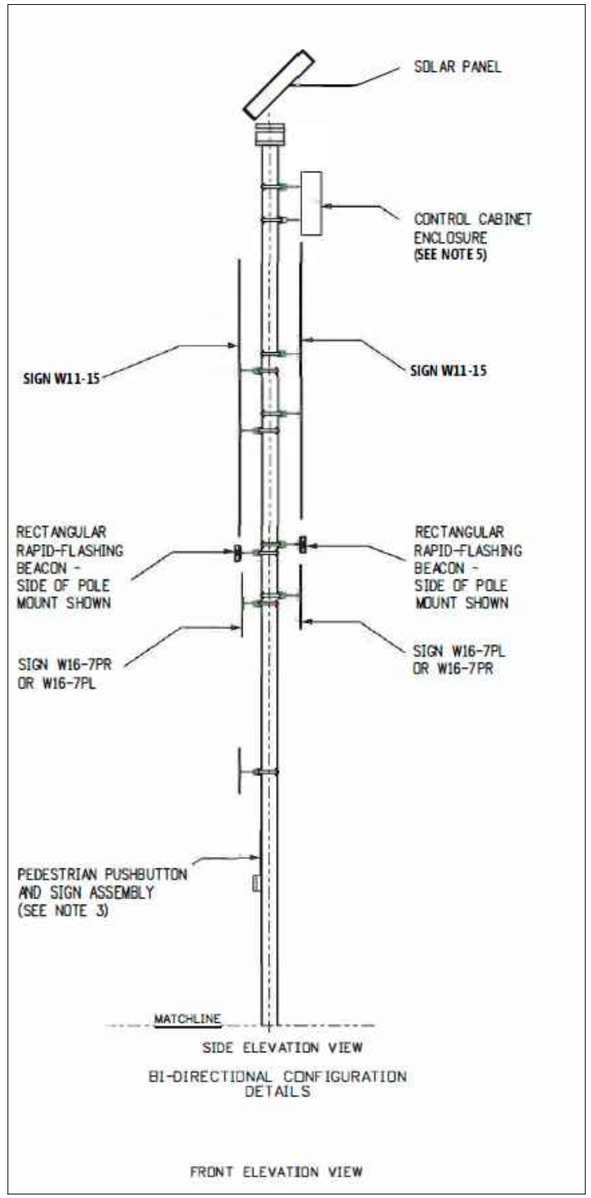

RECTANGULAR RAPID-FLASHING BEACON (RRFB)

GENERAL NOTES

1. THE RRFB SYSTEM SHALL ADHERE TO ALL ASPECTS OF THE FEDERAL HIGHWAY ADMINISTRATION, INTERIM APPROVAL 21-RECTANGULAR RAPID-FLASHING BEACONS AT UNCONTROLLED MARKED CROSSWALKS (FHWA IA-21).
2. AN RRFB SHALL ONLY BE USED TO SUPPLEMENT A POST-MOUNTED W11-2, S1-1, OR W11-15 SIGN WITH 16-7P PLAQUE, LOCATED IMMEDIATELY ADJACENT TO AN UNCONTROLLED MARKED CROSSWALK.
3. PEDESTRIAN PUSHBUTTON AND SIGN ASSEMBLY MAY BE SEPARATE PARTS. USE R10-25 (9"x12" SIGN IN ACCORDANCE WITH 2009 MUTCD. SIGN MAY INCLUDE INTEGRATED WARNING LIGHTS.
4. TERMINATE RRFB CONNECTIONS PER MANUFACTURER'S RECOMMENDATION.
5. CONTROL CABINET ENCLOSURE SHALL BE SIZED BY THE RRFB MANUFACTURER.
6. BEACON ASSEMBLY MAY BE MOUNTED ON THE SIDE OF THE POLE AS SHOWN OR ON THE TOP OF THE POLE IF SPECIFIED.
7. RRFB DISPLAYS SHALL BE LED TYPE MEETING THE INTENSITY REQUIREMENTS OF SAE J595 FOR CLASS 1 YELLOW, BUT SHALL NOT EXCEED 1000 CANDELAS DURING DAYLIGHT AND 500 CANDELAS AFTER DARK.
8. SEE SHEET 1, 2, AND 4 FOR STANDARD BASE AND FOUNDATIONS DETAILS.
9. POLE SHALL BE ALUMINUM SCHEDULE 80 OR STEEL SCHEDULE 40 AS DIRECTED BY THE ENGINEER.
10. FOR POSTED SPEEDS OF 35 MPH OR LOWER, THE W11-2 SIGNS SHALL BE 36"x36". FOR POSTED SPEEDS OF 40 MPH OR HIGHER, THE W11-2 SIGNS SHALL BE 48"x48".
11. PEDESTAL FOUNDATION MAY BE USED FOR BOTH UNI-DIRECTIONAL AND BI-DIRECTIONAL CONFIGURATIONS. BREAKAWAY BASE INSTALLATION (AS SHOWN OF SHEET 1) SHALL BE USED FOR UNI-DIRECTIONAL CONFIGURATION ONLY.

Revisions:	Designed By: SAK	Scale: (As Shown)	
	Drawn By: SAK	Date Created:	
	Checked By: Staff	Plot Date: 1/13/2025	F.I.R. Date:
	File: STND-27.dwg	F.O.R. Date:	For Const. Date:
	File Location: G:_CAD\Standards\2023 Road Standards & Templates\Standards (2023)\Drawings\T&E Manual Standards		

JEFFERSON COUNTY COLORADO

DIVISION OF
Transportation and Engineering
100 JEFFERSON COUNTY PARKWAY, SUITE 3500
GOLDEN, COLORADO 80419
(303) 271-8495

STANDARD 27-1
FLASHING BEACON AND SIGN INSTALLATIONS

Project No.: – Sheet - Of -

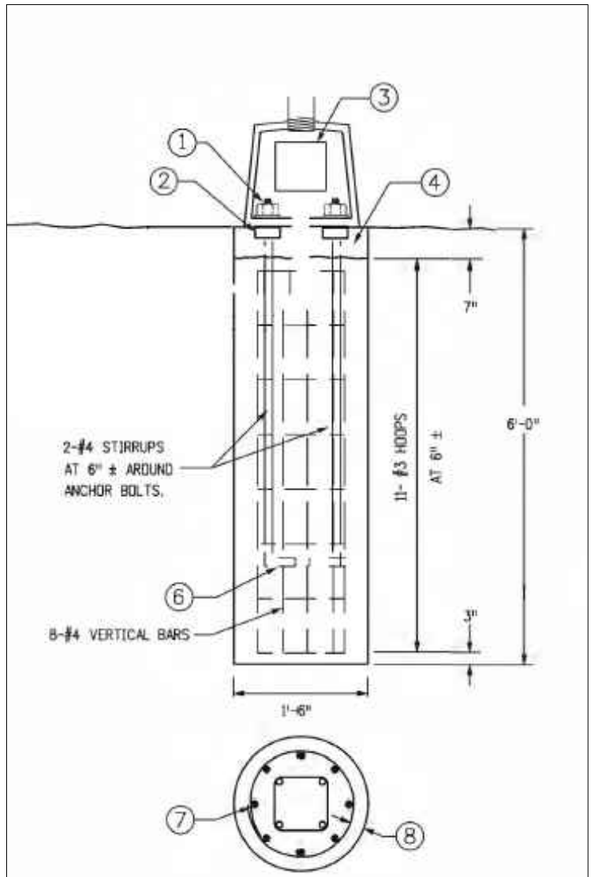

ALTERNATE PEDESTAL BASE INSTALLATION

DESIGN DATA

THE DESIGNS HEREIN ASSUME THAT FLASHING BEACONS ARE INSTALLED WITHIN THE ROADWAY PRISM WITH THE FOLLOWING SOIL PARAMETERS:

SOIL DENSITY v = 110 LB./CU.FT.
SOIL COHESION = 750 LB./SQ.FT. FOR MEDIUM STIFF COHESIVE SOIL
SOIL ø ANGLE = 30 DEG. FOR MEDIUM DENSE COHESIONLESS SOIL
SF = 3.0 FOR FLEXURAL RESISTANCE

CONTACT THE ENGINEER IF THE FLASHING BEACON WILL NOT BE INSTALLED WITHIN THE ROADWAY PRISM OR IF ANY OF THE FOLLOWING SOIL CONDITIONS ARE ENCOUNTERED DURING DRILLING:

A) THE SOIL HAS A HIGH ORGANIC CONTENT OR CONSISTS OF SATURATED SILT AND CLAY.
B) THE SITE WON'T SUPPORT THE WEIGHT OF THE DRILLING RIG.
C) THE FOUNDATION SOILS ARE NOT HOMOGENOUS.
D) FIRM BEDROCK IS ENCOUNTERED.
E) A HIGH GROUNDWATER TABLE IS ENCOUNTERED.
F) LARGE BOULDERS ARE ENCOUNTERED.

FOOTING DESIGN IS BASED ON 100 MPH WIND LOAD ON A 48"x48" DIAMOND SIGN PANEL MOUNTED 9 FT. ABOVE THE GROUND, WITH A 24"x24" RECTANGULAR PLAQUE UNDERNEATH AND A FLASHING BEACON 12" ABOVE. IF A SIGN CONFIGURATION IS PROPOSED THAT EXCEEDS THESE DIMENSIONS, THE FOOTING DESIGN MUST BE ENGINEERED AND SIGNED AND SEALED BY A PROFESSIONAL ENGINEER REGISTERED IN THE STATE OF COLORADO.

FOOTING NOTES

1. HEX NUTS
2. SQUARE NUTS
3. HAND HOLE SHALL BE PROVIDED.
4. 4 IN. MIN. NON-SHRINKABLE GROUT OVER ROUGH FOUNDATION
6. INSTALL ANCHOR BOLTS (FURNISHED WITH POLE) PER MANUFACTURER'S TEMPLATE PRINT (FURNISHED WITH ORDER)
7. MINIMUM OVERLAP OF 12 IN.
8. 1-1/2 IN. CLEARANCE FOR HOOPS

CAISSON DESIGNS REQUIRE THAT THE CAISSON BE FOUNDED IN COMPACT SAND, CLAY OR SANDY CLAY. IF, BY VISUAL INSPECTION OF THE HOLE, OTHER MATERIAL IS PRESENT, THE CAISSON DESIGN SHALL BE MODIFIED AS DETERMINED BY THE ENGINEER.

GENERAL NOTES

1. POLE AND PEDESTAL MUST BE DESIGNED TO MEET THE REQUIREMENTS OUTLINED IN THE "STANDARD SPECIFICATIONS FOR STRUCTURAL SUPPORTS FOR HIGHWAY SIGNS LUMINAIRES AND TRAFFIC SIGNALS", PUBLISHED BY AASHTO, A WIND VELOCITY OF 100 MPH. THE CONTRACTOR SHALL SUBMIT TWO SETS OF WORKING DRAWINGS, SIGNED AND SEALED BY A PROFESSIONAL ENGINEER REGISTERED IN THE STATE OF COLORADO, IN ACCORDANCE WITH SECTION 105.02 OF THE STANDARD SPECIFICATIONS FOR ROAD AND BRIDGE CONSTRUCTION.

Revisions:	Designed By: SAK	Scale: (As Shown)	
	Drawn By: SAK	Date Created:	
	Checked By: Staff	Plot Date: 1/13/2025	F.I.R. Date:
	File: STND-27.dwg	F.O.R. Date:	For Const. Date:
	File Location: G:_CAD\Standards\2023 Road Standards & Templates\Standards (2023)\Drawings\T&E Manual Standards		

JEFFERSON COUNTY COLORADO

DIVISION OF
Transportation and Engineering
100 JEFFERSON COUNTY PARKWAY, SUITE 3500
GOLDEN, COLORADO 80419
(303) 271-8495

STANDARD 27-2
FLASHING BEACON AND SIGN INSTALLATIONS

Project No.: – | Sheet - | Of -

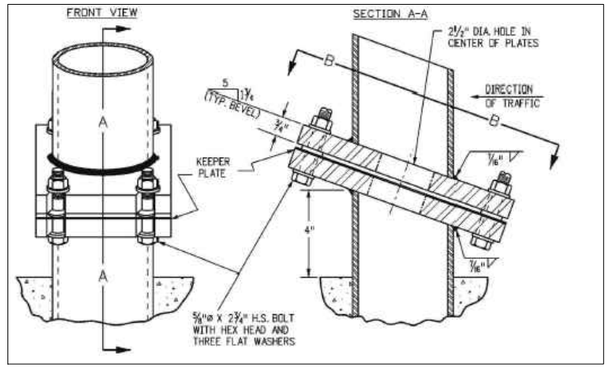

BREAK-AWAY ASSEMBLY BOLTING PROCEDURE

1. ASSEMBLE POST TO FOOTING WITH BOLTS-ONE FLAT WASHER ON EACH BOLT TOP AND BOTTOM, AND ONE FLAT WASHER AND THE KEEPER PLATE BETWEEN THE BREAK-AWAY PLATES. USE BRASS SHIMS TO PLUMB THE POST.
2. TIGHTEN ALL BOLTS TO MAXIMUM POSSIBLE WITH A 12"-15" PIPE WRENCH TO BED WASHERS AND SHIMS TO CLEAN BOLT THREADS, THEN LOOSEN EACH BOLT IN TURN AND RE-TIGHTEN IN A SYSTEMATIC ORDER TO 450 INCH-POUNDS TORQUE.
3. BURR THREADS AT JUNCTION WITH NUT USING A CENTER PUNCH TO PREVENT NUT LOOSENING.

TYPICAL BREAK-AWAY ASSEMBLY DETAILS

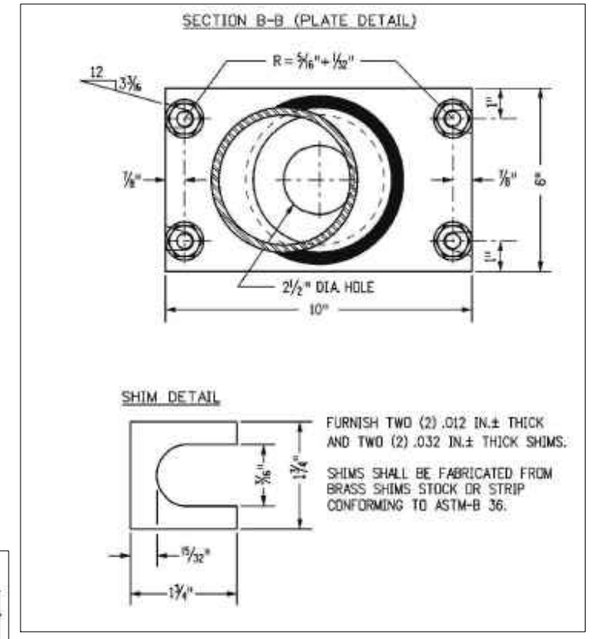

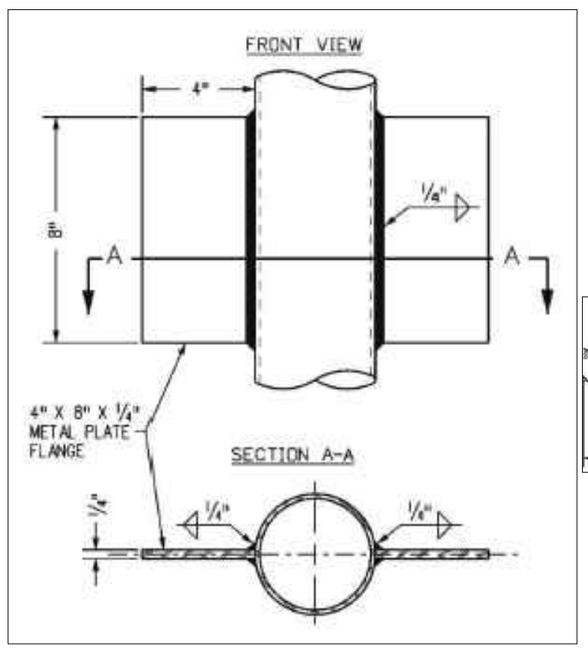

POST ANCHOR DETAILS

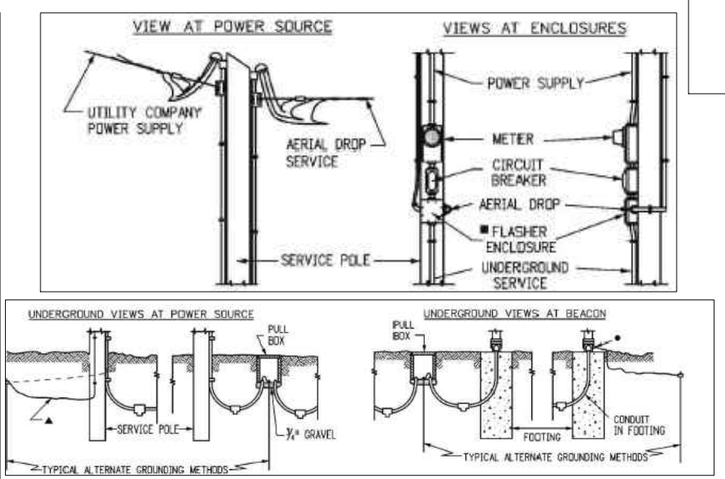

TYPICAL ELECTRICAL SERVICE DETAIL

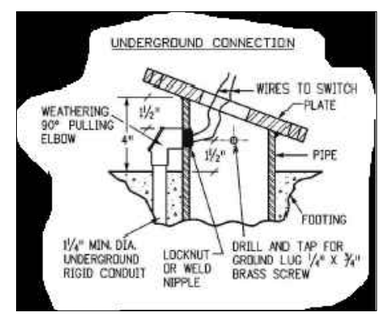

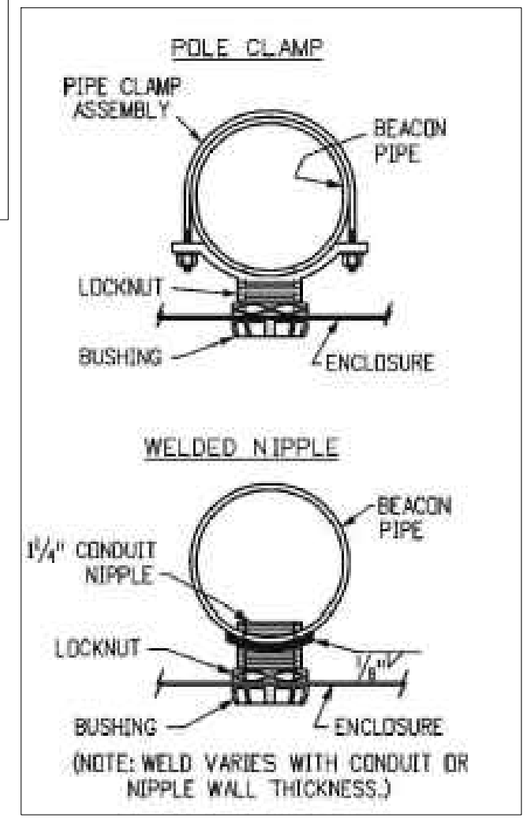

TYPICAL PIPE ATTACHMENTS

NOTES

LOCATION AND CONFIGURATION OF ELECTRICAL EQUIPMENT IS DIAGRAMMATIC ONLY (USE ANY METHOD COMPLYING WITH THE GENERAL NOTES).

- ▲ EXISTING GROUND AT SERVICE POLE; OTHERWISE PULL THRU CONDUIT OR ATTACH TO CONDUIT AND TAP OFF UNDERGROUND.
- ● DRILL AND TAP PIPE FOR ¼" ROUND ROUND HEAD BRASS SCREW, ¾" LONG, FOR GROUND LUG
- ■ PROVIDE WEEP HOLE WITH AERIAL DROP SERVICE.
- # BEDDING MATERIAL FOR CONDUIT SHALL BE PLACED IN ACCORDANCE WITH THE NATIONAL ELECTRICAL CODE.

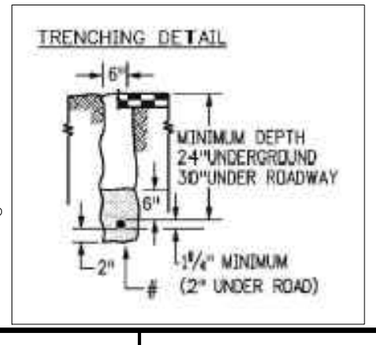

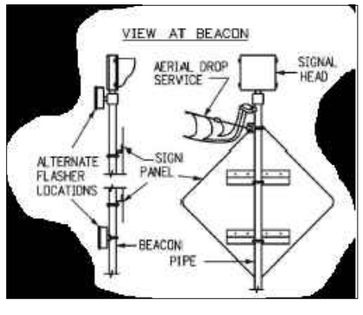

Revisions:	Designed By: SAK	Scale: (As Shown)	
	Drawn By: SAK	Date Created:	
	Checked By: Staff	Plot Date: 1/13/2025	F.I.R. Date:
	File: STND-27.dwg	F.O.R. Date:	For Const. Date:
	File Location: G:_CAD\Standards\2023 Road Standards & Templates\Standards (2023)\Drawings\T&E Manual Standards		

JEFFERSON COUNTY COLORADO

DIVISION OF Transportation and Engineering
100 JEFFERSON COUNTY PARKWAY, SUITE 3500
GOLDEN, COLORADO 80419
(303) 271-8495

STANDARD 27-3
FLASHING BEACON AND SIGN INSTALLATIONS

Project No.: – Sheet - Of -

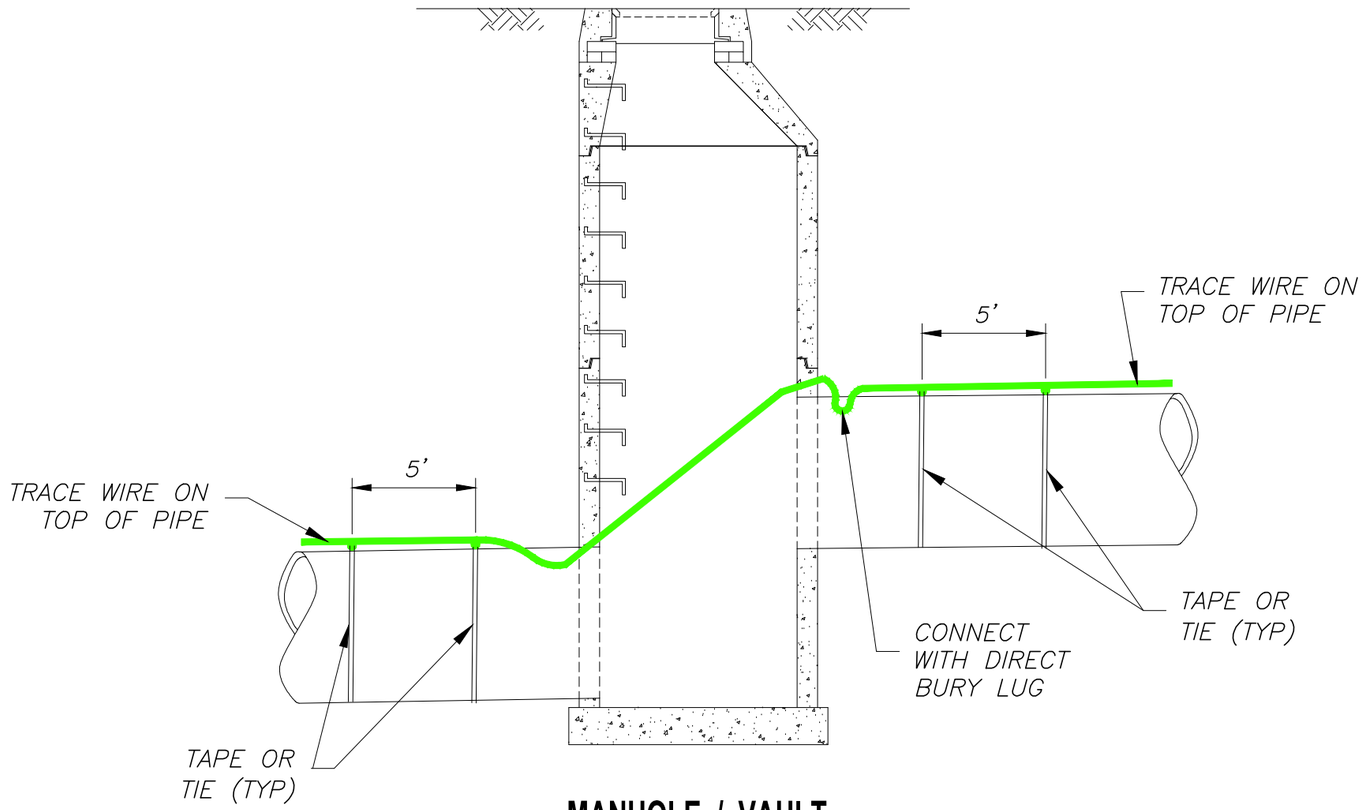

MANHOLE / VAULT
TYPE R INLET

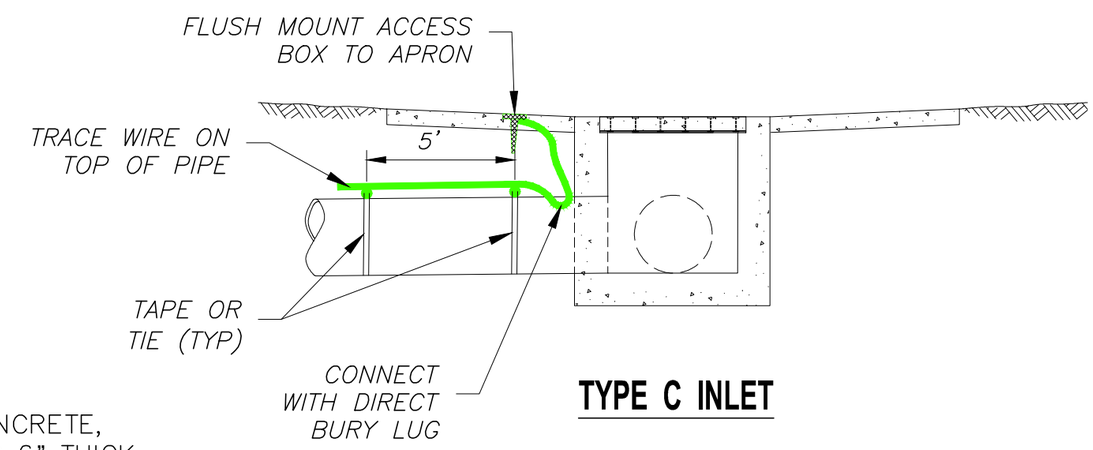

TYPE C INLET

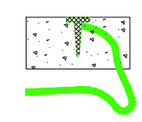

SOFT SURFACE ACCESS BOX

NOTES

1. IN LOCATIONS WHERE THE ACCESS BOX CANNOT BE PLACED WITHIN EXISTING CONCRETE, THE ACCESS BOX SHALL BE PLACED WITHIN A 12" X 12" CONCRETE PAD THAT IS 6" THICK. THE TEST STATION PAD SHALL BE INSTALLED FLUSH WITH THE ASSET AND IN THE DETACHED SIDEWALK AREA OR BEHIND THE SIDEWALK. TEST BOXES SHALL NOT BE INSTALLED IN THE ROADWAY.

2. THIS DETAIL SHALL APPLY TO ALL STORM SEWER, EDGE DRAINS, OR ROADWAY DRAINAGE STRUCTURES.

Revisions:	Designed By: SAK	Scale: (As Shown)	JEFFERSON COUNTY COLORADO — DIVISION OF Transportation and Engineering, 100 JEFFERSON COUNTY PARKWAY, SUITE 3500, GOLDEN, COLORADO 80419, (303) 271-8495
	Drawn By: SAK	Date Created:	STANDARD 28-1
	Checked By: Staff	Plot Date: 1/13/2025 F.I.R. Date:	UTILITY WIRE INSTALLATION LOCATION - STORM SEWER (1)
	File: STND-28.dwg	F.O.R. Date: For Const. Date:	Project No.: – Sheet - Of -
	File Location: G:_CAD\Standards\2023 Road Standards & Templates\Standards (2023)\Drawings\T&E Manual Standards		

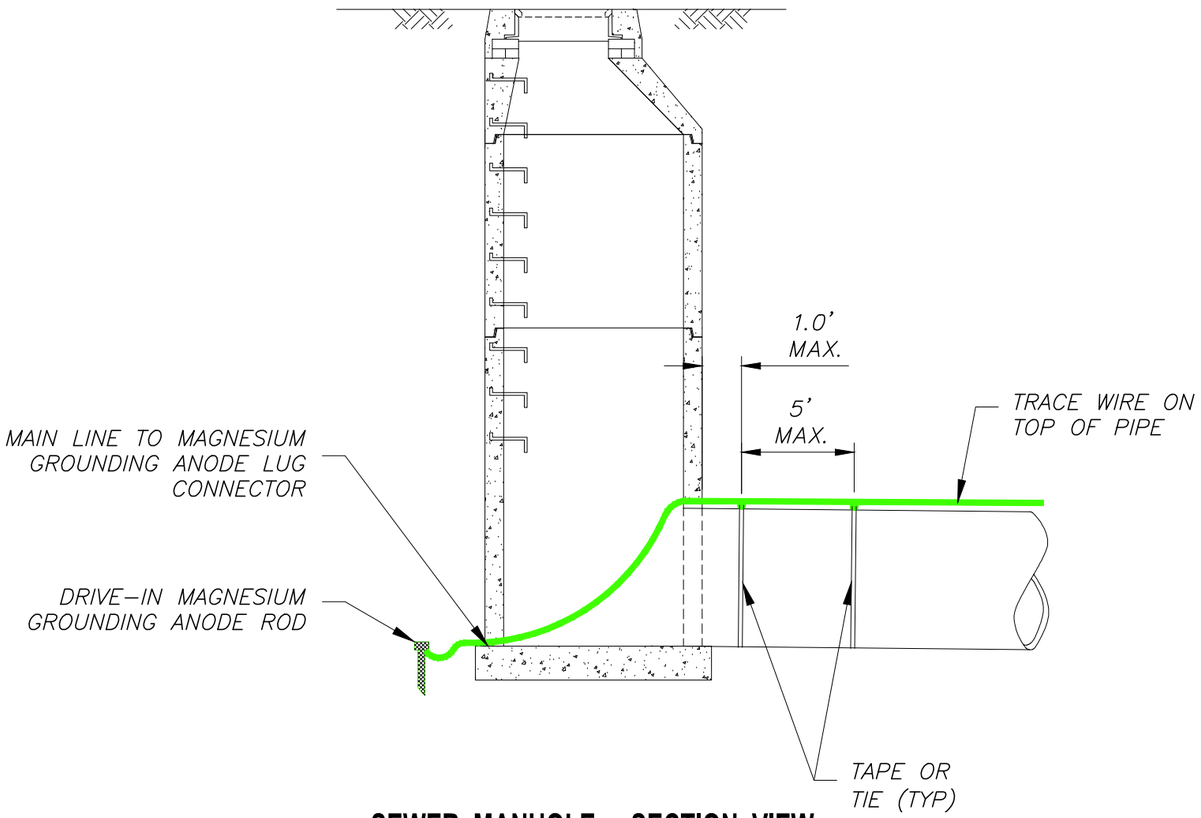

SEWER MANHOLE - SECTION VIEW

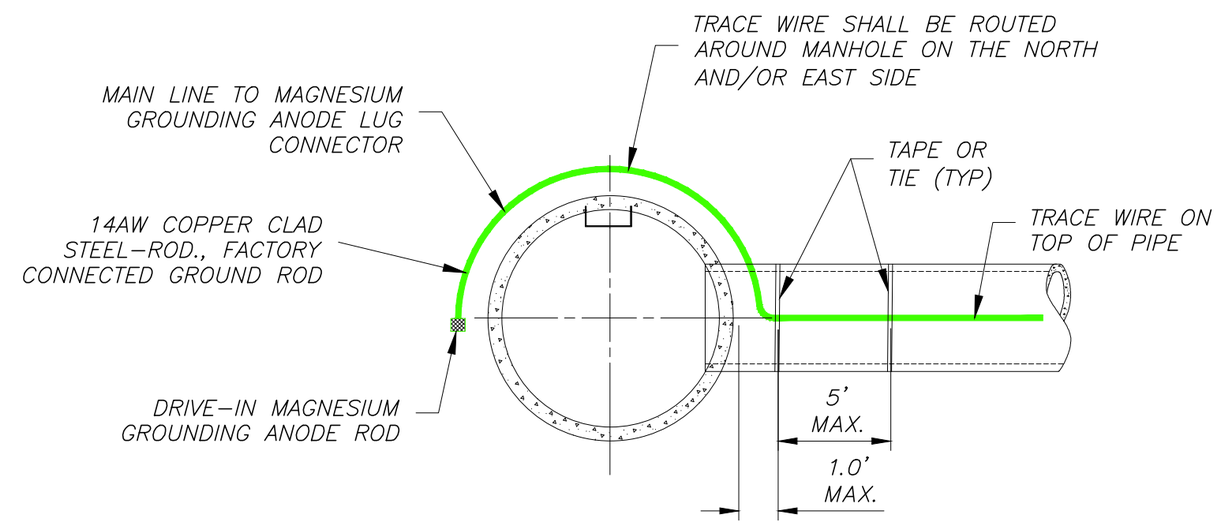

SEWER MANHOLE - PLAN VIEW

Revisions:	Designed By: SAK	Scale: (As Shown)	
	Drawn By: SAK	Date Created:	
	Checked By: Staff	Plot Date: 1/13/2025	F.I.R. Date:
	File: STND-28.dwg	F.O.R. Date:	For Const. Date:
	File Location: G:_CAD\Standards\2023 Road Standards & Templates\Standards (2023)\Drawings\T&E Manual Standards		

JEFFERSON COUNTY COLORADO

DIVISION OF
Transportation and Engineering
100 JEFFERSON COUNTY PARKWAY, SUITE 3500
GOLDEN, COLORADO 80419
(303) 271-8495

STANDARD 28-2

UTILITY WIRE INSTALLATION LOCATION - STORM SEWER (2)

Project No.: – Sheet - Of -

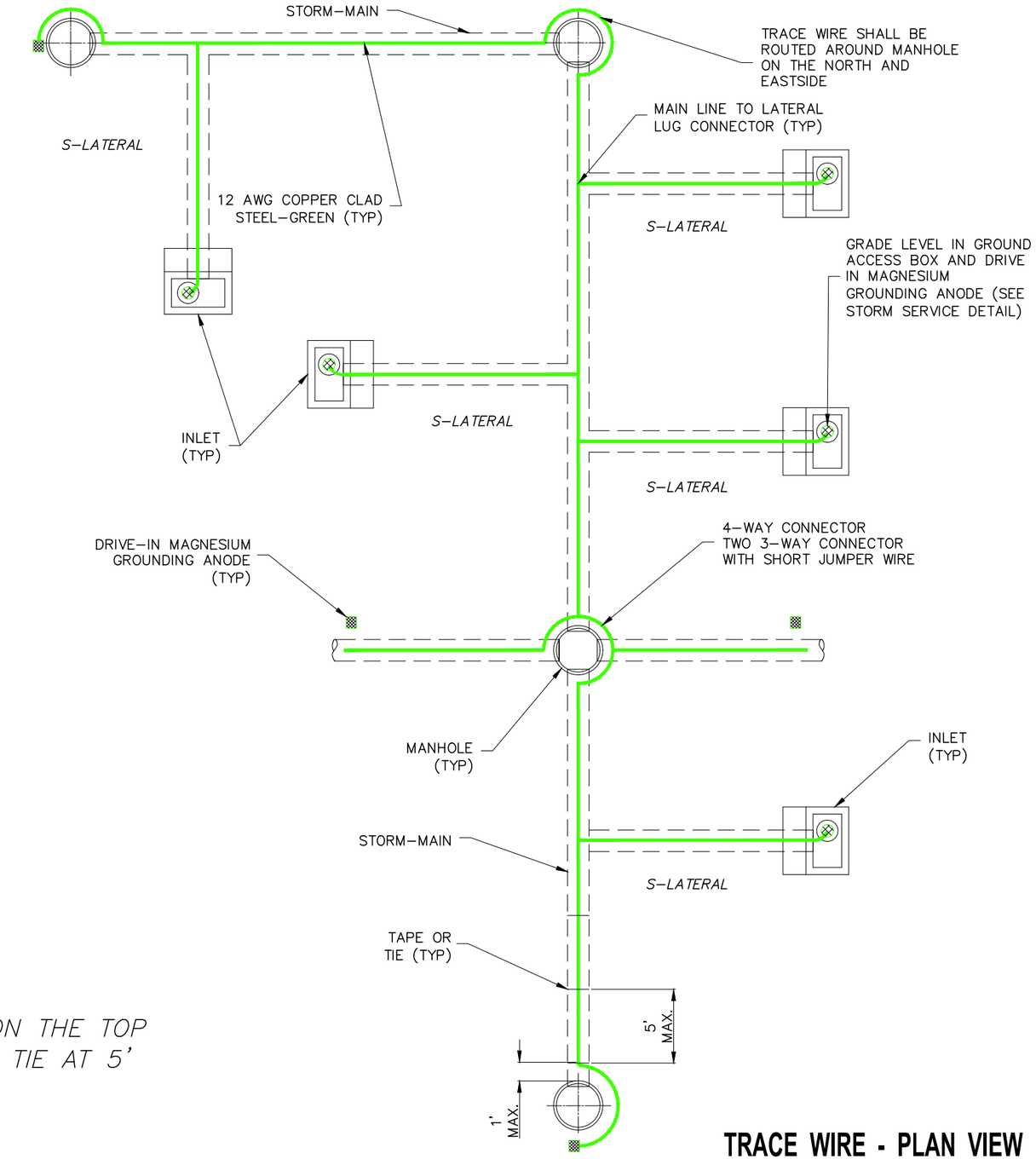

TRACE WIRE - PLAN VIEW

NOTES:

1. *WIRE SHALL BE INSTALLED ON THE TOP OF THE PIPE WITH TAPE OR TIE AT 5' INTERVALS.*

Revisions:	Designed By: SAK	Scale: (As Shown)	JEFFERSON COUNTY COLORADO — DIVISION OF Transportation and Engineering, 100 JEFFERSON COUNTY PARKWAY, SUITE 3500, GOLDEN, COLORADO 80419, (303) 271–8495
	Drawn By: SAK	Date Created:	STANDARD 28–3
	Checked By: Staff	Plot Date: 1/13/2025 F.I.R. Date:	UTILITY WIRE INSTALLATION LOCATION – STORM SEWER (3)
	File: STND–28.dwg	F.O.R. Date: For Const. Date:	Project No.: – Sheet - Of -
	File Location: G:_CAD\Standards\2023 Road Standards & Templates\Standards (2023)\Drawings\T&E Manual Standards		

REFERRAL COMMENTS

1ST REFERRAL COMMENTS

1st Referral Comments and Response Log		
Source of Comment	**Comment**	**Staff Response**
Adams County	1. For Property in the Jefferson County MS4 Stormwater Permit area, should you provide more requirements if one (1) acre or more is disturbed results? Applicant should be responsible for operation and maintenance report and a SWMP for installation and maintenance of Erosion and Sediment Control. A Builder/developer is more responsible for adhering to all the regulations regarding illicit discharge.	This may be considered for future regulation updates however this was not a part of this regulation update process.
	2. Would addition of infiltration testing are used within the Soil/Geologic Investigation Report Based on percolation rates and converting MPI (minutes per inch) to feet per second? Then, the available surface area of the filter media within say a Sand Filter Basin would be used to multiply the feet per second value to determine the cubic feet per second value. Could that be discussed in the regulation?	Staff agrees that the engineer could convert these values however this was not a part of this regulation update and may be considered for future updates.
	3. Removal of K Factor evaluation when determining what type of Land Disturbance Permit is required; this would help make it less confusing.	Removal of the K factor was completed through a separate regulation update process.
Arapahoe County	No comments	Acknowledged
Broomfield	3.3.3.2. Is this true? Indiana just south of HWY 128 is posted 50mph but your GIS shows it as a Minor Arterial.	This would apply to new Minor Arterials. Eventually, the County will undertake a County-wide speed limit survey to evaluate whether these still apply. The lower end of this range applies more frequently on roads vs. streets are more likely to be higher
	3.6.4 Where did these come from? They don't seem to match Green Book	These standards were not included with this update, but can be reviewed for the next TDCM update

3.7.2 Why are you removing this? We have this in our specs and I am interested in reason for change to know if we should include this in our next update.	The County wants to prevent trees' trunks from obstructing visibility. Also, to maintain more consistency with keeping the foliage outside of the vision clearance triangle
3.7.2.1 How did you get these numbers? They don't match Green Book or CDOT?	These standards were not included with this update, but can be reviewed for the next TDCM update
3.7.3.2 What is your Warrants for needing turn lanes? CDOT? Harmelink?	Up to the study author, but usually CDOT
3.7.6 I really like this. How did you get these numbers? Broomfield may look at stealing some of this info in our next specs update.	These are legacy values. Please reach out when Broomfield is updating specs. We are happy to discuss further!
Do you have any time constants on Traffic Control? For example Broomfield does not allow TC on arterials between 7-9a and 4-6p. We also have restrictions around schools during school drop off pick up times.	Yes. The County limits construction hours to 7a-7p, and lane closures to 8:30a-3:30p
Trip Generation Memorandum: Can this be used on any type of road class? What about location to a signalized intersection. Does it need to look at requirements for turn lanes? Take a look at Broomfield Basic TIS in Broomfield Standard and Specs 162.02.03.	This can be used on any roadway class, but is only for developments generating less than 800 trips
Existing Roadway System: Road classification and speed??	This is implied as part of a roadway description
How did you determine? Broomfield was using 2yr.	The County generally uses 3 years for in-house traffic count and crash data relevance.
Broomfield requires this info in the appendix for our basic study. The aerial for drive spacing and the direction distribution have been very helpful.	The TA is used earlier in the process, when specific site plan, accesses, distribution, etc. are unknown. The TA will be required for the rezoning, and subsequent Site Development plans and Plats require the more comprehensive TIS

	None of these typical include parking. Does the County not allow on street parking?	On street parking is allowed but only for specific templates.
Conifer and South Evergreen Community Committee (Paul Olsen and Chuck Newby)	Section 3.4 Standard Templates: Under 'Private street/road templates and Non-maintained streets/roads in County ROW templates', minimum requirements for private driveways are undefined. Additionally, the table references LDR Section 15, which contains roadway design requirements; however, during many design and construction scenarios, the TDCM and LDR Section 15 document will be in conflict; therefore, the Committee recommends that roadway design and construction requirements be removed for LDR Section 15.	This can be explored during a future reg update that includes both TDCM and LDR. At this time, no LDR changes are proposed.
	Section 3.7.8 Non-Maintained Roads in County Right-of-Way, Driveways, and Private Street/Roads, and Non-Maintained Roads in County Right-of-Way Standards: Template 18 only addresses the cross section, it does not address the plan view.	Curve radius is defined in 3.7.8.1.1, other horizontal features, such as pull-offs, turnarounds, intersections, etc. use separate Standards
	Section 3.7.8.1.1 Curve Radius: A 30’ curve radius will not be adequate for emergency vehicles in many scenarios; therefore, the curve radius specification should be situationally based. Also, please address the clear space beyond the pavement limits to accommodate emergency vehicle overhangs, that is, those areas beyond its wheelbase.	This is a minimum curve radius. All new driveways are reviewed by the applicable Fire Protection District, to determine if specific circumstances require a larger radius
	Section 3.7.8.1.2 Width: The Committee has determined that 500’ is too long a distance; therefore, the width specification should be based and justified by the length of hose that the firefighting apparatus carries.	Staff has worked with the Fire Protection Districts on this language/requirements.
	Section 3.7.8.1.3 Grade: Grade limitations are generally positive; however, the TDCM also needs to address the maximum change of grade from one roadway section to another. In many scenarios, going from 12% down to 12% up in a short distance will be a safety hazard. Additionally, there should be an explanation for this statement reading, for example: “Maximum 12 percent grade where the dip of the natural terrain bears between South 60° East and South 45° West”. Moreover, all other possible orientations should also be specified.	This is addressed in Section 3.6.4 requiring minimum K values for Sags/ Crests based on design speed.

Section 3.7.8.2.1 Curve Radius: What is this 30' curve radius based upon? There needs to be a reference or justification for this specification: It could be that a 30' radius is not sufficient in many scenarios.	See above.
Section 3.7.8.2.2 Width (For a street/road serving up to 15 dwelling units): Will parking be allowed on these roadways? What about horizontal and vertical obstructions? This width specification should situationally based.	On-street/road parking is not permitted per the provided detail.
Section 3.7.8.3: The use of the clause, "The off-site driveway or private road shall meet requirements of this section" is ambiguous. Such as clause as this must clearly state, in detail, the requirements that the roadway design and construction is required to meet. As this section is written, it is not clear what would constitute an unacceptable roadway or driveway design! There are no details or drawings to clearly show what the minimum acceptable roadway and driveway. This section must include a statement similar to the following, "The documentation shall include scale drawings upon which fire protection district approved turning templates are overlayed". Additionally, my reaction to the following statement, "Such statement shall bear the professional engineer's seal, signature and date,…" is that, as a professional engineer, I (Paul Olson) would not risk my professional engineer's license to approve plans for an on-site driveway or private roadway in a circumstance where the actual requirements are so ill-defined. Moreover, if the driveway cannot safely accommodate a fire protection district apparatus then there is NO condition where an exception should be granted — this requirement should be deleted completely — inasmuch as it is not clear how Jefferson County Staff will judge any requested exemption under this clause. In my opinion (Paul Olson), this clause will only cause Staff and the public significant, ongoing difficulties that are unnecessary. Again, there are no templates or drawings that detail the minimum requirements for driveways as they intersection with the county roadway!	Reference section 3.7.8 for minimum driveway requirements. Subsection 3.7.8.3.3, required a detailed explanation of how a fire apparatus will access the site, this explanation can be narrative or graphical, at engineer's discretion As per the Alternate Standard Request (ASR) process as defined in the LDR, any exceptions to engineering standards must be approved by a registered Professional Engineer, to be considered by the County. This requirement aligns with that ASR process. This is why it must be approved by a PE that it can accommodate a fire apparatus
The following are the Committee's specific comments with respect to the TDCM Transportation Studies Appendix:	NA

General: This section is greatly improved! However, it needs better section numbering to match the rest of the document and there needs to be a separate section on Traffic Signals which would include a specification for engineering studies of MUTCD Warrants and Alternatives.	Numbering differs because it is an appendix, not a section
Requirements for Transportation Studies (TS): The trip generation analysis should include both weekdays and weekend. This is particularly important for commercial developments but also residential developments in the vicinity of commercial developments such as shopping centers. For mountain area developments, the study should also analyze the impact of major transportation corridors. For example, a currently active proposed development within the Conifer/Aspen Park community — the proposed Conifer Center PD, Case No. 20-111200RZ — should study the impact to U.S.-285 in the Turkey Creek Canyon. This is a major bottleneck, in particular for emergency access and routes for evacuation.	Typically, the heaviest traffic generation is on weekdays. However, in unique circumstances where there is higher trip generation on a weekend, County staff will request additional analysis be completed for weekends. The County does not maintain any limited-access Freeways, and intersection operations are the limiting factor for County roadways corridors. Developments impacting State highway facilities, such as US 285, are referred to CDOT for review and comments on impacts to those facilities.
Trip Generation Summary Table: Columns to be modified in and added to the table, "1) columns for Weekdays AM Peak & PM Peak, 2) columns for Saturday AM Peak & PM Peak, and 3) columns for Sunday AM Peak & PM Peak	Typically, the heaviest traffic generation is on weekdays. However, in unique circumstances where there is higher trip generation on a weekend, County staff will request additional analysis be completed for weekends.

Existing Area Conditions: The discussion of existing traffic counts is inadequate. This section needs to set clear requirements for traffic counts: Automated Daily Counts need to be collected for at least two weeks; Turning Movement Counts, that they are now mostly automated, should be collected based upon the peaks periods identified in the daily counts; Turning Movement Counts shall NOT be collected on Monday, Friday or the day before or after a holiday weekend; and Turning Movement Counts will be required on weekends for commercial and residential developments in the vicinity of a commercial development. All counts shall be sufficient to clearly identify peaks and to show that the analysis is not based upon the lowest volumes collected. All counts shall establish the average daily volumes as well as the peak hour volumes.	It would be unreasonable for the County to require two weeks of traffic data. The County requires the same standard for counts that the County uses for the annual traffic count program: "All counts are to be collected over a 24-hour continuous period on a typical weekday, not including Fridays or Mondays, from 12:00 AM to 11:59 PM. No Friday, Monday, weekend, or holiday counts, and no data collection during inclement weather". This language will be added to this section.
Background Traffic: Are you requiring the inclusion of outputs from the Denver Regional Council of Governments (DRCOG) travel demand model? If so there should be a step to calibrate the impacted subsection of the model to current conditions.	At a minimum, the County only requires that the projected background traffic be interpolated from the DRCOG's TDM's Model Assigned Traffic Volumes to fit the horizon years of the proposed development.
Project Traffic: Trip distribution shall be based upon the trip tables in the DRCOG model. If there are none then a Origin and Destination Study should be provided. The DRCOG model shall be run with the traffic generated by the proposed development.	An Origin and Destination Study is an unreasonable requirement for developers. The County reviews trip distribution and the methodology used by developers.

	Levels of Services (LOS): These determinations shall be supported by Volume to Capacity Ratios (V/C). The LOS determinations themselves are not an accurate depiction of the traffic situation. For example the V/C could be on the lowest edge of a LOS range say V/C of 0.80 is it really LOS C and be judged as acceptable, however, in reality it is worse. Would a facility that operates at LOS D or V/C of 0.90 for 12 consecutive hours a day be acceptable? What are the limits on how many hours a day that a facility could operate in congested conditions? An hour in the peaks may be OK but not more. Jefferson County Transportation and Engineering Level of Service Criteria for Arterials is based on Volume-to-Capacity Ratios Level of Service Description V/C: A. Free-flow conditions with unimpeded maneuverability, stopped delay at signalized intersection is minimal, that is, on the order of 0.00 to 0.60. B. Reasonably unimpeded operations with slightly restricted maneuverability. Stopped delays are not bothersome at 0.61 to 0.70. C. Stable operations with somewhat more restrictions in making midblock lane changes than LOS B. Motorists will experience appreciable tension while driving at 0.71 to 0.80. D. Approaching unstable operations where small increases in volume produce substantial increases in delay and decreases in speed of 0.81 to 0.90. E. Operations with significant intersection approach delays and low average speeds of 0.91 to 1.00.	The County uses LOS as a measure of congestion. The nuanced differences between using LOS vs V/C is too detailed for standard requirements. If a traffic study shows LOS D or better, the intersection operates acceptably regardless of the V/C. LOS D or better is acceptable regardless of how many hours of the day are at LOS D.
	Signalized Intersections: The TDCM should require proposed signal phasing plus the proposed timings, cycle times, phase timings, vehicle and pedestrian clearance intervals, controller settings, detection zone placements, etc. Projected queue lengths shall be calculated. Engineering studies as required by the MUTCD shall present all the signal warrants even the ones that are not met and they shall include at least a week of 15 minute counts.	Requirements for signals are specified under the "Improvement Analysis" section of the appendix. The County requires developers evaluate Warrant 2 - Four Hour, unless unique conditions would make a different signal warrant apply. Only one Warrant needs to be met for a signal to be considered. MUTCD Signal Warrant analysis does not require a week of 15 minute incremental traffic counts.
Building Safety	No comments.	Acknowledged.

Elk Creek Fire	3.7.8 - we support this clarification.	Acknowledged.
	3.7.8.1.3.1 - we support this proposed change to improve the safety of occupant evacuations and fire apparatus access. In addition, this increased clearance on each side of the driveway would provide better sunshine access to help melt snow and ice, especially on excessive grades. I find many driveways that have been approved for grade variances iced over and impassable in the winter because they're in the shade.	Acknowledged.
	3.7.8.1.4 - we support this proposed change. The increase to 15% grade has been our practice for many years with the appropriate fire mitigation system, which is a residential fire sprinkler system. This change would make the increase to 15% automatic without having to obtain approval from the fire districts.	Acknowledged.
	3.7.8.1.7 - we support this proposed change to improve the safety of occupant evacuations and fire apparatus access.	Acknowledged.
	3.7.8.1.4 - Turnarounds. I'd recommend that a maximum cross grade be added to turnarounds. It's very difficult and can be unsafe to turnaround a large fire apparatus when the grade is over 4%. I would also recommend that the location of the approved turnaround be located a minimum of 30 feet away from the building exterior to keep fire apparatus away from the collapse zone and radiant heat. We recently had major paint damage to two fire apparatus that was too close to a house fire.	To be addressed with the next referral.
	3.7.8.2.4 Exception - Grades - I'd recommend that P2904 sprinkler systems be added after NFPA 13D. These are nationally recognized fire sprinkler systems that comply with the code.	To be addressed with the next referral.
	3.7.8.2.5 - we would support this proposed change if it were modified to add the applicable building, fire, and wildland codes. Since this section covers private roads serving more than one dwelling unit it's important that they also meet fire and wildland codes to improve the safety of occupant evacuations and emergency vehicle access.	To be addressed with the next referral.

	3.7.8.3 #4 - I'd recommend that P2904 sprinkler systems be added after NFPA 13D. These are nationally recognized fire sprinkler systems that comply with the code.	To be addressed with the next referral.
	3.7.8.3 - Who's responsibility is to determine if the offsite driveway or private road meets the requirements in this section ? At this time we require the applicant to have a civil engineer evaluate the offsite for compliance and provide the fire district a written report.	Staff agrees that it is the responsibility of the applicants Civil Engineer. To provide clarity with the next referral.
Planning Engineering	Complete	Acknowledged.
Evergreen Fire	3.7.8 - We support this clarification.	Acknowledged.
	3.7.8.1.2 – We support this proposed change to increase the safety of the residents and first responders.	Acknowledged.
	3.7.8.1.3 - We support this proposed change allowing the 15% grade to be automatic without having to gain approval from the fire district. With this grade increase an automatic fire sprinkler system allows for increased safety of the occupants and mitigates the fire hazard surrounding the structure.	Acknowledged.
	3.7.8.2.2 - We support this proposed change to improve the safety occupants and responders and allow for pullouts to be modified depending on site topography.	Acknowledged.
	3.7.8.2.4 - We would support this proposed change if it were modified to add the applicable building, fire, and wildland codes. Since this section covers private roads serving more than one dwelling unit it's important that they also meet fire and wildland codes to improve the safety of occupant evacuations and emergency vehicle access.	Update made.
	3.7.8.3 – We support these changes but believe that further clarification will be needed to determine the parameters for item 3 and determining a fire district serving the residence safely and effectively.	Further clarification to be provided regarding requests for relief.
Foothills Fire	3.7.8 - We support this clarification.	Acknowledged.
	3.7.8.1.2 – We support this proposed change to increase the safety of the residents and first responders.	Acknowledged.

	3.7.8.1.3 - We support this proposed change allowing the 15% grade to be automatic without having to gain approval from the fire district. With this grade increase an automatic fire sprinkler system allows for increased safety of the occupants and mitigates the fire hazard surrounding the structure.	Acknowledged.
	3.7.8.2.2 - We support this proposed change to improve the safety occupants and responders and allow for pullouts to be modified depending on site topography.	Acknowledged.
	3.7.8.2.4 - We would support this proposed change if it were modified to add the applicable building, fire, and wildland codes. Since this section covers private roads serving more than one dwelling unit it's important that they also meet fire and wildland codes to improve the safety of occupant evacuations and emergency vehicle access.	Update made.
	3.7.8.3 – We support these changes but believe that further clarification will be needed to determine the parameters for item 3 and determining a fire district serving the residence safely and effectively.	Further clarification to be provided regarding requests for relief.
Barbara Ford	The MANUAL is an Engineering Document, and is not intended to be “flexible”, as one Planning Commissioner stated, and one Staff Planner expressed, astonishingly, at the July Hearing. Staff Engineer Nathan Seymour also expressed his willingness to employ “flexibility” in the Engineering designs, even an unspecified design offered by a Fire Chief.	There are instances where an existing standard within the Manual cannot be met and it is necessary for an applicant to request relief. The relief requests may be approved if the applicant can demonstrate that alternate solutions or designs will not be detrimental to or contrary to the Purpose of this Regulation and will be in harmony with the general purpose and intent of the provision for which a waiver is sought and that strict compliance with such provision would be impossible or impractical.

Engineering Standards are not reducible or flexible so that accommodations can be made for those developers who cannot meet the Standards. Professional Engineers don't consider flexibility in "engineering designs" that get around the Standards as a Professionally-ethical or acceptable approach to design and construction, because that is precisely how one would go about increasing the likelihood of failure, of roads, bridges, buildings, etc.	See response above.
For the Commissioner who is a licensed Professional Engineer, who expressed that he would not use his seal for projects where developers (his clients) could not meet Engineering Standards, I have the following questions: a. Would you use your seal if the "certified statement" complied with the MANUAL Minimum Engineering Standards? b. What do you interpret a "certified statement" to mean? c. Do you agree that a "qualified" professional structural engineer in Jefferson County, likewise be allowed "flexibility" to design bridges and buildings that don't meet Engineering Standards for some clients who cannot meet Standards? d. Do you agree (with Staff) that Road Engineering Standards are only relevant as to whether they can carry emergency equipment, or might the Road Engineering Standards have additional value and significance? e. Do you agree that approving a development that will increase traffic on a noncompliant private mountain road that does not meet even the Minimum Engineering Standard in a high to extreme wildfire environment may present safety issues? Who should bear that liability?	Any requested for relief are required to be signed and sealed by the applicants engineer. Staff will review the relief process for private streets/roads more closely to provide clarity as to what should be submitted to Staff for review.
P&Z Staff licensed engineers saw no issue in case 19-104466PF, and allowed the Fire Chief to "approve" the non-compliant road to carry significantly more traffic. The PC and Board agreed with Staff.	The regulations do currently state that the appropriate Fire Protection District may approve alternative standards. Staff is currently working to change this process so that relief requests are approved by the County with input from the Fire Protection District.

P&Z STAFF INTEND TO DELAY COMPLIANCE WITH MANUAL ENGINEERING STANDARDS UNTIL AFTER SUBDIVISION APPROVAL Staff intends that compliance with the Manual Engineering Standards be demonstrated at the time of acquisition of a building permit, instead of prior to Board approval of the development/subdivision. This revision is contradictory to the LDR, the MANUAL, Colorado Revised Statutes, and a Colorado Court of Appeals decision (see below). From page 3 of the Engineering Manual: 1.2. Jurisdiction The requirements of this MANUAL shall apply to all subdividers, developers ….designing and constructing public and/or private streets/roads within unincorporated areas of Jefferson County (hereafter called County), except where superseded by State and/or the Federal regulations. The foregoing design and construction of transportation systems are subject to review and approval by the County pursuant to any County regulation or requirement. 1.3. Purpose and Effect Presented in this MANUAL are the minimum design and technical criteria for the design and construction of streets/roads. All land development or any other proposed construction submitted for approval under the provisions of the LDR and/or ZR as applicable, shall include adequate transportation system analysis and appropriate transportation system design. Such analysis and design shall conform to the criteria set forth herein….”	For a subdivision, the applicant is required to submit to the County construction plans showing how the existing and proposed on and offsite roads will be improved to meet County Standards. Any requests for relief of these standards would be reviewed at this time. These plans are required to be approved by the County prior to recordation of the subdivision.

	The Colorado Court of Appeals found that the Board of County Commissioners (in a Mineral County case3) abused its discretion because it approved a development where the required provision for access was not secured before awarding its approval of the development. "III. Access A. State Law Section 30-28-133.1, C.R.S.2007, provides: Subdivision plan or plat-access to public highways. No person may submit an application for subdivision approval to a local authority UNLESS the subdivision plan or plat provides, pursuant to section 43-2-147, C.R.S., that all lots and parcels created by the subdivision will have access to the state highway system in conformance with the state highway access code."… "We do not read the plain language of this statute to allow postponing access beyond the application for final subdivision approval. The statute imposes a condition ("unless") on a current activity ("submit an application") and uses a present tense term ("provides"). This condition would be meaningless if the application need only address how access might be obtained in the future. See Black's Law Dictionary 1224 (6th ed. 1990) ("Provide" is defined as "To make, procure, or furnish for further use, prepare. To supply; to afford; to contribute."))." "While "will have access" expresses the future tense, in our view that wording reflects the three-phase progression of all regulated land development: (1) planning; (2) approval; and (3) build out. Thus, a subdivision "will have access" only when its internal roads have been completed and connected with a state highway. But that connection must still be provided for in the application." The Court found "… an abuse of discretion because the subdivision might never have the required statutory access".	Acknowledged.

	Likewise, the Court would also find unlawful the postponement of the statutory access requirement until the time of issuance of a building permit, as P&Z Staff now proposes. If a developer cannot meet the Minimum Engineering Standards for the access route, then the access has not been secured as State Law requires. The Court required that the application must have such provisions prior to Board approval. "According to James A. Kushner, Subdivision Law and Growth Management § 7.14 (2006), "Final approval constitutes recognition that all conditions for subdivision approval imposed by the local government body have been satisfied." We adopt this definition because it furthers prudent land use policy. A final approval creates vested development rights under which a reasonable developer could start construction. See Jafay v. Bd. of County Comm'rs, 848 P.2d 892, 902 (Colo.1993). But if a condition set forth in a purported final approval is not met, then the status of improvements made during the interim would be uncertain."	Acknowledged.

	Furthermore, the Court recognized the burden that such postponements into the future present to objectors and other interested parties (see below), a burden that Jeffco Staff, the PC and the Board do not seem to recognize in a continuing effort to postpone critical considerations and demonstrations until after Board approval. This was done for numerous issues in case 19-104466PF, and the Board failed to make adequate (or any, in some cases) provisions for them – road, water supply, off-site drainage, etc, leaving a significant burden to us, our neighbors and also to future perspective buyers of the parcels, exactly as the Court of Appeals discourages in the Mineral County case. "Such a conditional final approval would also burden the zoning authority to revisit and perhaps modify the condition or extend the time for compliance. A similar burden would fall on members of the public who opposed the development, but would have to continue appearing at subsequent proceedings to preserve their opposition whenever the zoning authority revisited the condition. See § 24-67-104(1)(e), C.R.S.2007 (the county resolution must set "forth the procedures pertaining to the application for, hearing on, and tentative and final approval of a planned unit development which shall afford procedural due process to interested parties")."	Acknowledged.
Open Space	No Comment	Acknowledged.

Jeffco Planning	Maybe y'all already talked about this, but assuming these are approved as written, how will it be communicated that a Sprinkler system is required if grades over 15% are approved for on-site driveways? (3.7.1.8.4. & 3.7.8.2.5) Is this something that could be noted painfully obvious for the review planner in the GPA to ease the review of the subsequent BP? Perhaps an even easier option would be to require the same letter from the homeowner to install the system that is required for off-site driveways of the same grade? "4) a written statement from the property owner that a fire sprinkler system will be installed per NFPA 13D at the time of Building Permit." Also love what y'all did with the traffic impact analysis sections. Excited see imagine proposed mitigations and to have so many fun tables for applicants to complete. Anyway we could require them to evaluate bicycle trip generation and parking as well? Certainly a personal wish list item so feel free to disregard.	This will be accomplished through the letter from the Fire Protection District associated with the BP.
Public Health	No Comment	Acknowledged.
Road and Bridge	No Comment	Acknowledged.

CDOT	Please note that most CDOT Rights of Way in Jefferson County are functionally classified, by which we would look to our rules and standards outlined in Code regarding access spacing, and a long list of design elements & considerations. Usually, if/when County standards are better and safer than CDOT's we will go with the stronger standards. Our standards do not define RoW widths, as we rely on and respect those of the local agencies. For example, if a landscaped center median is needed, that would be defined by the local agency, not CDOT. This is a frequent mis-conception by developers. When a plan like the 2018 West Connect PEL was adopted by your local officials, and it already has cross sections within it, should those not be used instead of these? Under the referral materials forward to us, we see but are not quite clear of the distinction and rule of when a suburban roadway design is warranted that is different from the rural and mountain roadway design. We are not sure for example, how the county determines when the major collector with curb, gutter & sidewalk is needed, and when it is not. Recent instructions CDOT staff is given from the State political level (Transportation Commission) is to advocate for more Multi-modal accommodations in our rights of Way, offering choices over driving. In great part this translates to share the road and sidewalks. We noted that many of the profiles do not show these elements and seem to have a minimum threshold based on ADT. That seems to be counterintuitive since the purpose of multi-modal is to lessen the dependency of vehicles for short trips.	Thank you for your comments. The County's roadway templates are meant to be utilized in conjunction with the County's Major Thoroughfare Plan (MTP). The MTP identifies not only the functional classification of each County roadway, but also whether each is considered a Street, requiring curb, gutter and sidewalk, or a Road, which would not require curb, gutter or sidewalk. This distinction is generally along the 6400' elevation line, but there are some exceptions. I've attached the MTP for your reference. Thank you.

As a suggestion: CDOT has put forward a checklist of strategies called TDM, which describes some of these public improvements – which these roadway cross sections might engage or adapt to. I wish to share three examples in Jefferson County that might illustrate some real question of how these translate (i.e. which template applies?): A heavily traveled 2-lane corridor with bus service (such as SH 75-Platte River Rd) Should there not be a sidewalk and auxiliary lane for a bus pull out and pedestrian landings? (noted: this road has multi-jurisdictions) • A heavily traveled 2 lane mountain corridor such as SH 74 through Evergreen. Should there be a sidewalk on both sides and maybe room for parallel parking? • The collector of Rainbow Hills Rd – currently under consideration to be relocated & rebuilt located inside a split diamond interchange of I-70, would it be under the standard of the file called Temp 5, or Temp 11 or 12 noting the developer has a park-n-ride and tourist oriented development proposed – with a lot of pedestrians anticipated. If I was a property owner, I would like to know on either corridor example above which minor arterial or collector standard applies.	Thank you for your comments. The County's roadway templates are meant to be utilized in conjunction with the County's Major Thoroughfare Plan (MTP). The MTP identifies not only the functional classification of each County roadway, but also whether each is considered a Street, requiring curb, gutter and sidewalk, or a Road, which would not require curb, gutter or sidewalk. This distinction is generally along the 6400' elevation line, but there are some exceptions. I've attached the MTP for your reference. Thank you.
CDOT uses the most current M & S Standards on roadway design. Please note they were recently updated/revised on Sep 6, 2022.	Acknowledged. Jefferson County also follows these standards.

	Lastly and very important, is that CDOT follows the Utility Accommodation Code and our rights-of way allow wet and dry utilities to share and cross our right of way under certain rules. Along interstates and expressways, we discourage any manholes in the roadway and push utilities as far to the outside of right of way as possible. Roadways with higher speeds generally greater than 40 mph, be very careful of allowing manholes in the roadway. Routine access into a manhole translates into lane closures and delays, which we try to avoid by better design. Relocating utilities is a very costly factor in roadway design and rebuild. It is recommended you add a general note about what rules should be followed to accommodate utilities in each roadway cross section. Indeed, it is complicated when storm pipes, traffic signals and traffic lights exist there too and it all has to fit.	Acknowledged. To be incorporated into the overall ULUC discussion.
South Metro Fire Rescue	No comments.	Acknowledged.
Xcel Energy	No objection to these proposals.	Acknowledged.
Engineering Geologist	Clarify that pavement design should include private and non-County maintained roads.	To be updated accordingly.
Jeffco T&E	No comments.	Acknowledged.

Community & Economic
Development Department
Development Services Division
www.adcogov.org

ADAMS COUNTY
COLORADO

4430 South Adams County Parkway
1st Floor, Suite W2000B
Brighton, CO 80601-8218
PHONE 720.523.6800
FAX 720.523.6967

November 23, 2022

Lindsey Wire, P.E.
Jefferson County Planning and Zoning
100 Jefferson County Parkway
Golden, Colorado 80419

Re: Transportation Design and Construction Manual Regulation Amendment

Thank you for including the Adams County Community and Economic Development Department in the review for the Transportation Design and Construction Manual Regulation Amendment. Adams County has reviewed all the attached documents and while the County is in support of the subject request, we would like to provide the following comments:

1. For Property in the Jefferson County MS4 Stormwater Permit area, should you provide more requirements if one (1) acre or more is disturbed results? Applicant should be responsible for operation and maintenance report and a SWMP for installation and maintenance of Erosion and Sediment Control. A Builder/developer is more responsible for adhering to all the regulations regarding illicit discharge.
2. Would addition of infiltration testing are used within the Soil/Geologic Investigation Report Based on percolation rates and converting MPI (minutes per inch) to feet per second? Then, the available surface area of the filter media within say a Sand Filter Basin would be used to multiply the feet per second value to determine the cubic feet per second value. Could that be discussed in the regulation?
3. Removal of K Factor evaluation when determining what type of Land Disturbance Permit is required; this would help make it less confusing.

Please do not hesitate to reach out to Adams County with any questions or concerns.

Thanks,

Steve Krawczyk P.E, CFM
Civil Engineer III, Community and Economic Development
ADAMS COUNTY, COLORADO
4430 S Adams County Pkwy, 1st Floor, Suite W2000B
Brighton, CO 80601
O: 720.523.6854

BOARD OF COUNTY COMMISSIONERS
Eva J. Henry DISTRICT 1 | Charles "Chaz" Tedesco DISTRICT 2 | Emma Pinter DISTRICT 3 | Steve O'Dorisio DISTRICT 4 | Lynn Baca DISTRICT 5

Community & Economic
Development Department
Development Services Division
www.adcogov.org

ADAMS COUNTY
COLORADO

4430 South Adams County Parkway
1st Floor, Suite W2000B
Brighton, CO 80601-8218
PHONE 720.523.6800
FAX 720.523.6967

November 23, 2022

Lindsey Wire, P.E.
Jefferson County Planning and Zoning
100 Jefferson County Parkway
Golden, Colorado 80419

Re: Transportation Design and Construction Manual Regulation Amendment

Thank you for including the Adams County Community and Economic Development Department in the review for the Transportation Design and Construction Manual Regulation Amendment. Adams County has reviewed all the attached documents and while the County is in support of the subject request, we would like to provide the following comments:

1. For Property in the Jefferson County MS4 Stormwater Permit area, should you provide more requirements if one (1) acre or more is disturbed results? Applicant should be responsible for operation and maintenance report and a SWMP for installation and maintenance of Erosion and Sediment Control. A Builder/developer is more responsible for adhering to all the regulations regarding illicit discharge.
2. Would addition of infiltration testing are used within the Soil/Geologic Investigation Report Based on percolation rates and converting MPI (minutes per inch) to feet per second? Then, the available surface area of the filter media within say a Sand Filter Basin would be used to multiply the feet per second value to determine the cubic feet per second value. Could that be discussed in the regulation?
3. Removal of K Factor evaluation when determining what type of Land Disturbance Permit is required; this would help make it less confusing.

Please do not hesitate to reach out to Adams County with any questions or concerns.

Thanks,

Steve Krawczyk P.E, CFM
Civil Engineer III, Community and Economic Development
ADAMS COUNTY, COLORADO
4430 S Adams County Pkwy, 1st Floor, Suite W2000B
Brighton, CO 80601
O: 720.523.6854

BOARD OF COUNTY COMMISSIONERS
Eva J. Henry DISTRICT 1 | Charles "Chaz" Tedesco DISTRICT 2 | Emma Pinter DISTRICT 3 | Steve O'Dorisio DISTRICT 4 | Lynn Baca DISTRICT 5

Lindsey Wire

From: Terri Maulik <TMaulik@arapahoegov.com>
Sent: Monday, November 7, 2022 12:59 PM
To: Lindsey Wire; PZ-Regulation-Revisions
Cc: Referrals
Subject: --{EXTERNAL}-- AC Case No O22-369 re: Regulation Amendment Case 22-122945AM – Transportation Design and Construction Manual

Follow Up Flag: Follow up
Flag Status: Flagged

CAUTION: This email originated from outside Jefferson County Government. Do not click links or open attachments unless you recognize the sender and know the content is safe.

Lindsey,

Thank you for the opportunity to review and comment on this project. The Arapahoe County Planning Division has no comments; however, other departments and/or divisions may submit comments.

ARAPAHOE COUNTY
PUBLIC WORKS & DEVELOPMENT

TERRI MAULIK
Planning Technician | Public Works and Development - Planning Division
6924 S Lima St., Centennial Co 80112
O: 720-874-6840 | M: 720-874-6650
arapahoegov.com [arapahoegov.com] | Facebook [facebook.com] | Twitter [twitter.com] | Instagram [instagram.com] | Nextdoor [nextdoor.com]

Many County services can be accessed online. You are encouraged to visit our website at https://www.arapahoegov.com/519/Public-Works-and-Development [arapahoegov.com]. Please consider emailing us at planning@arapahoegov.com as this email inbox is monitored by several staff members. You may also call (720) 874-6650 to leave a message.

From: Lindsey Wire <lwire@co.jefferson.co.us>
Sent: Wednesday, November 2, 2022 2:44 PM
To: PZ-Regulation-Revisions <PZRegRev@co.jefferson.co.us>
Subject: Regulation Amendment Case 22-122945AM – Transportation Design and Construction Manual

CAUTION: This email originated from outside of the organization. Do not click links or open attachments unless you recognize the sender and know the content is safe.

Dear Agency/Interested Party,

Jefferson County Planning & Zoning is proposing a Regulation Amendment process pertaining to the Transportation Design and Construction Manual. This regulation update includes updates to Chapters 3 and 5 as well as updates to the Transportation Studies Appendix, Standard Details, and Templates.

Red-marked drafts can be found in both Word and Adobe PDF formats on our Regulation Revision website and in the case folder (22-122945AM) here.

We are very interested in any comments or concerns that you or your agency may have with these proposed changes. If you have any questions, please contact Planning and Zoning Regulation Revisions at PZRegRev@jeffco.us.

Comments are due Wednesday November 23, 2022.

Sincerely,

Planning and Zoning Staff

Lindsey Wire, P.E.
Planning & Zoning
Engineering Supervisor
303.271.8717
lwire@jeffco.us | **planning.jeffco.us**

JEFFERSON COUNTY COLORADO

Planning and Zoning is open to the public and appointments are strongly encouraged. Virtual and in-person appointments are available Monday through Thursday. County offices are closed on Fridays. Please schedule appointments [jeffco-planning-and-zoning-hqorx.appointlet.com] and submit applications online. Go to planning.jeffco.us for more information.

Traffic Review
Jessica Upchurch
jupchurch@broomfield.org
303-438-6238

Jefferson County Transportation Design & Construction Manual

JEFFERSON COUNTY, COLORADO PLANNING AND ZONING DIVISION

Revision Dates

The Transportation Design & Construction Manual, formerly known as Roadway Design & Construction Manual, adopted by the Board of County Commissioners of Jefferson County, Colorado on March 21, 1995, has since been amended on the following dates:

December 5, 1995

May 12, 1998

March 23, 1999

October 1, 2002

July 1, 2003

November 25, 2003

December 5, 2006

May 20, 2008

October 13, 2009

November 24, 2015

July 17, 2018

December 17, 2019

XX-XX-XX

Jefferson County Planning and Zoning Division
100 Jefferson County Parkway, Suite 3550, Golden, Colorado 80419
303-271-8700 ▪ http://planning.jeffco.us

Formatted: Font: (Default) +Body (Calibri)

Formatted: Normal, Left

Formatted: Font: (Default) +Body (Calibri), Not Italic

Formatted: Normal

Table of Contents

Chapter 1 General Provisions

1.1. Short Title
1.2. Jurisdiction
1.3. Purpose and Effect
1.4. Enactment Authority
1.5. Amendment and Revisions
1.6. Enforcement Responsibility
1.7. Review and Approval
1.8. Interpretation
1.9. Relationship to Other Standards

Chapter 2 Construction Drawing Requirements

2.1. General Requirements
2.2. Cover Sheet
2.3. Plan
2.4. Profile
2.5. Cross Sections
2.6. Details
2.7. Standard Notes

Chapter 3 Design and Technical Criteria

3.1. General
3.2. Street/Road Types
3.3. Functional Classification
3.4. Standard Templates
3.5. Horizontal Alignment
3.6. Vertical Alignment
3.7. Intersection Spacing, Vision Clearance Triangle, ~~and~~ Sight Distance, Driveways and Private Streets/Roads
3.8. Drainage
3.9. Traffic Control
3.10 Miscellaneous

Chapter 4 Pavement Design and Technical Criteria

4.1. General Requirements
4.2. Pavement Design Report Submittal
4.3. Subgrade Investigation
4.4. Pavement Design Criteria
4.5. Pavement Design Procedure
4.6. Material Specifications

Chapter 5 Construction Specifications and Standards

5.1. Construction Specifications
5.2. Construction Standards

Definitions

Examples: Standard Templates

Examples: Construction Standards

Design Nomographs for Pavements

Transportation Studies

Resolution

Chapter I

General Provisions

1.1. Short Title

These regulations together with all future amendments shall be known as the "Jefferson County Transportation Design and Construction Manual" (hereafter called MANUAL) as referenced in the Jefferson County Land Development Regulation (hereafter called LDR) and the Jefferson County Zoning Resolution (hereafter called ZR).

1.2. Jurisdiction

The requirements of this MANUAL shall apply to all subdividers, developers or other landowners, their employees, agents or contractors designing and constructing public and/or private streets/roads within unincorporated areas of Jefferson County (hereafter called County), except where superseded by State and/or the Federal regulations. The foregoing design and construction of transportation systems are subject to review and approval by the County pursuant to any County regulation or requirement.

1.3. Purpose and Effect

Presented in this MANUAL are the minimum design and technical criteria for the design and construction of streets/roads. All land development or any other proposed construction submitted for approval under the provisions of the LDR and/or ZR as applicable, shall include adequate transportation system analysis and appropriate transportation system design. Such analysis and design shall conform to the criteria set forth herein. Technical criteria not specifically addressed in this MANUAL shall follow the provisions of the American Association of State Highway and Transportation Officials (AASHTO) "A Policy of Geometric Design of Highways and Streets", as amended; the Colorado Department of Transportation (CDOT) Design Standards, as amended; and the Manual on Uniform Traffic Control Devices (MUTCD), as amended.

1.4. Enactment Authority

The LDR has been adopted pursuant to the authority conferred within: Article 28 of Title 30 (County Planning); Article 2 of Title 43 (State, County, and City Highway Systems); Article 20 of Title 29 (Land Use Control and Conservation); and other applicable sections of the Colorado Revised Statutes, as amended.

This MANUAL is adopted by resolution of the Board of County Commissioners, as the authority provided by which the County promulgates the LDR.

1.5. Amendment and Revisions

These criteria may be amended as new technology is developed and/or if experience gained in the use of this MANUAL indicates a need for revision. Amendments and revisions will be made by resolution of the Board of County Commissioners.

1.6. Enforcement Responsibility

It shall be the obligation of the Board of County Commissioners acting through the Department of Development and Transportation to enforce the provisions of this MANUAL.

1.7. Review and Approval

The County will review all submittals for compliance with this MANUAL. An approval by the County does not relieve the owner, engineer, or designer from responsibility of ensuring that the calculations, plans, specifications and construction are in compliance with the MANUAL and accepted engineering practices.

1.8. Interpretation

In interpretation and application of the provisions of the MANUAL, the following shall govern:

1.8.1. The provisions shall be regarded as the minimum requirements for the protection of public health, safety, comfort, convenience, prosperity, and welfare of the residents of the County.

1.8.2. Whenever a provision of this MANUAL and any other provision of the LDR or any provision in any law, ordinance, resolution, rule, or regulation of any kind, contains any restriction covering any of the same subject matter, whichever restrictions are more restrictive or impose higher standards of requirements shall govern.

1.8.3. This Jefferson County Transportation Design and Construction Manual was adopted by the Board of County Commissioners on March 21, 1995. Any amendments to this MANUAL shall be immediately effective upon its adoption by the Board of County Commissioners. All applications shall be subject to the provisions of this MANUAL that are in effect at the time of the formal application submittal, unless otherwise specified by the Board of County Commissioners resolution.

1.9. Relationship to Other Standards

If the State or Federal Government imposes stricter criteria, standards, or requirements, these shall be incorporated into the County's requirement after due process and public hearings needed to modify the County's regulations and standards.

Chapter 2

Construction Drawing Requirements

2.1. General Requirements

Construction drawings must be submitted in Portable Document Format (PDF) unless otherwise approved for hard copy submittal, to scale, shall be a complete package, which includes all details and documentation necessary for the construction of the proposed improvements. The plans shall be prepared by, or under the direction of a professional engineer, registered in the State of Colorado, and qualified in the field of civil engineering.

The final set of plans (hard copy) for each drawing shall be 24" x 36", unless otherwise approved by the County, and shall contain a title block, sheet number, scale, north arrow, and date.

The developer's engineer shall comply with Colorado Revised Statute 9-1.5-101 through 9-1.5-108 "Excavation Requirements" when the nature of work proposed (1) will involve a contract with Jefferson County (this shall include, but not be limited to binding agreements such as permits and Subdivision Improvement Agreements); (2) will involve primarily Horizontal Construction and not the construction of buildings; (3) will involve excavation that exceeds two (2) feet in depth and that is a contiguous 1,000 square feet, or involve Utility Boring; and (4) requires the design services of a licensed professional engineer. Existing and Proposed Subsurface Utilities shall be identified on the design plans in accordance with ASCE 38 Standards. For more information please reference the Colorado Revised Statutes and Federal Highway Administration websites.

2.2. Cover Sheet

A cover sheet should be provided with each submittal which contains the following:

1. A vicinity map at a minimum scale of 1" - 2000' which shows the location and name of all arterial streets/roads within one mile of the proposed development and all streets/roads within the proposed development.
2. A legend, scale, and north arrow.
3. General notes.
4. Index of sheets.
5. Seal, signature, and date of the professional engineer responsible for plan preparation.
6. A permanent benchmark description and location based on USGS datum. At least one permanent benchmark must be established within each subdivision or filing thereof, located on public property.

If a cover sheet is not provided, the above information shall be included on the first sheet of the submittal.

2.3. Plan

The plan view shall include but not be limited to, the following:

1. The scale shall be a minimum of one (1) inch to fifty (50) feet and shown on the plan.
2. Locations and dimensions of existing and proposed improvements, property lines, easements, and Right-of-Way. Plan view limits shall extend 100 linear feet before the Point of Beginning, and 100 linear feet after the Construction End. Each Point of Beginning and Construction End shall be clearly labeled and identified with stationing.
3. Names of streets/roads.
4. Survey line ties to section or quarter corners.
5. Survey lines and centerline stationing. Stationing shall be equated to flowline stationing at horizontal radius curves, cul-de-sacs, and other departures from normal roadway cross sections.
6. Centerline stations for all intersecting roadways and commercial driveways.
7. Existing and proposed street/road improvements (sidewalk, curb, gutter, pavement limits, bridges, culverts, inlets, manholes, asphalt core sample locations, guardrails, curb ramps, etc.). Existing improvements shall be clearly depicted by a dashed line; proposed improvements shall be depicted by a solid line and or greyscale or hatching. Plans shall include existing and proposed limits for asphalt pavement, including areas of milling and overlaying, as well as new asphalt placement. All items shall have a corresponding legend.
8. Curve layout including radius, degree of curve, deflection angle, length of curve, point of curvature, and point of tangency.
9. Elevations and station shall be noted for all curb returns, points of curvature, points of tangency, and high or low points of all vertical curves. The existing and proposed percent cross slope shall be repeated on the plan sheets at select points. Include elevations and cross slopes, existing and proposed, for all lanes of intersection improvements, regardless if construction is planned for opposing streets.
10. Rate of super elevation.
11. Typical template(s) for streets/roads.
12. Match lines and consecutive sheet numbers.
13. Key map.
14. A minimum of one (1) permanent bench mark, based on United States Geological Survey's datum, fully described, within each subdivision or filing thereof.

15. Existing and proposed utilities and structures, including but not limited to: water, fire hydrants, sanitary sewer, storm sewer, telephone, gas, electric, cable television, fiber optic. Existing utility pothole information shall be organized on a separate plan sheet to identify location, depth, utility type, pipe size and material, conflicts with proposed improvements, and other information obtained during subsurface investigation. Subsurface investigation shall include new laterals or service connections to existing main lines and be clearly shown on separate plan sheets. *

16. Stations and critical elevations of all utility and drainage appurtenances. *

17. Construction phasing. *

18. Major Collector and/or Arterial intersection design at a scale of one (1) inch to twenty (20) feet. *

19. Traffic signal design at a scale of one (1) inch to twenty (20) feet. *

20. Signing and Striping Plan.

20. Noise attenuation measures/details. *

21. Trails. *

22. Sediment and erosion control measures/details. *

23. Landscaping. *

*May be included on separate plan sheets.

2.4. Profile

The profile shall include, but not be limited to the following:

1. The scale shall be a minimum of one (1) inch to five (5) feet for street profiles and a minimum of one (1) inch to ten (10) feet for road profiles, and be shown on the plan.

2. Existing (dashed line) and proposed (solid line) grades.

3. Continuous centerline stationing for the entire portion of the existing and proposed roadway shown in the plan. Clearly label centerline stationing for all intersecting roadways and commercial driveways.

4. All design elevations shall be centerline, flowline, back of curb, or lip of gutter.

5. Vertical curve data including length of curve, P.V.C., P.V.T., P.V.I., beginning and end grades. All vertical curves shall be symmetrical.

6. Curb return profiles at a horizontal scale of 1" = 10' and vertical scale of 1" = 1'.

7. All existing curbs, gutters, sidewalks, culverts or storm sewers, ditches and irrigation structures and asphalt adjacent to the proposed design, as well as the same such features that are 100 linear feet before the Point of Beginning and continue for 100 linear feet beyond the Construction End. Basis for existing grades shall be as-built elevations at intervals not to exceed fifty (50) feet. All existing grades, locations and alignments shall be field surveyed by a licensed Professional Land Surveyor for design of the proposed improvements. Previously approved designs are not an acceptable means of establishing existing grades.

8. Separate flowline or top of curb profiles shall be provided for all proposed curb and gutter, including for design of cul-de-sacs and any other departure from a 2% street/road cross slope. In addition, cross-sections at intervals not to exceed 50 feet are required if a departure from a normal cross-slope is proposed.

9. Existing and proposed utilities. *

*May be included on separate plan sheets.

2.5. Cross Sections

1. On widening or matching projects, or as required by the Jefferson County Planning & Zoning, cross sections of the proposed new construction and existing improvements within the Right-of-Way shall be provided at survey stationing at a maximum of fifty foot

intervals and at locations of cross culverts. The scale shall correspond to that used on the plan and profile.

2. Cross sections shall identify both the existing or matching percent cross slope of the roadway, as well as percent proposed cross slope.

3. Cross sections shall identify the elevation at the point of match for widening projects for each station interval.

4. Cross sections shall identify the proposed new road segment in gray scale or other hatching.

5. Cross sections shall identify the proposed pavement treatment or alterations, such as mill and overlay of the match point; as well as the proposed new pavement section and respective lifts asphalt.

6. Core samples shall be collected from the existing roadway prior to construction to determine the existing asphalt depth and condition. Such cores shall not exceed 4-inches in diameter and shall be collected at the centerline of the existing road, as well as edge of existing asphalt. The existing depth of asphalt shall be represented on the cross sections.

7. Proposed widening shall avoid cross sections with gross inverts or peaks at the match point. Normal roadway cross sections shall follow AASHTO design criteria that limit the minimum cross slope to 1.5% and maximum cross slope to 3.0%. Cross slope grade change shall note exceed +/- 0.5% as measured every 50 linear feet along the station intervals. There shall be no change in existing cross slope greater than +/- 1.0% from the match point to the proposed edge of asphalt, or the flow line or the lip of the gutter pan.

Refer to Figure 2-1 "Sample Cross Section" below:

Figure 2-1 - Sample Cross Section

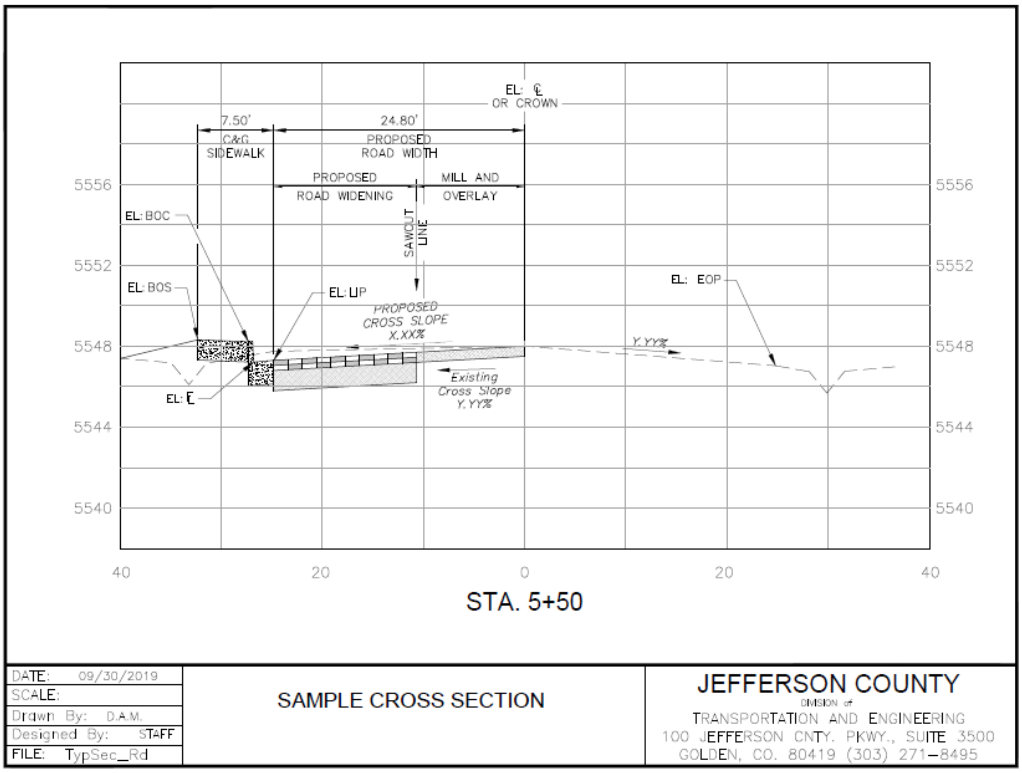

2.6. Details

Jefferson County or CDOT standard details may be referenced as applicable. Where these standards cannot be used, a separate detail sheet shall be provided with an explanation detailing why these standard details are not being used.

2.7. Standard Notes

The following general notes shall appear on the cover sheet or the first sheet of the plans for all street/road construction plan packages.

1. A Construction Permit from Transportation and Engineering is required prior to commencing work within County Right-of-Way.
2. Any work within State Right-of-Way will require a State Construction Permit.
3. The contractor shall notify Transportation and Engineering at least 24 hours prior to starting construction within the Right-of-Way.
4. The contractor shall provide all signs, barricades, flagmen, lights, or other devices necessary for safe construction traffic control in accordance with the current edition of the MUTCD and as modified by the Colorado Supplement to the MUTCD. A construction traffic control plan shall be submitted to and approved by Transportation and Engineering prior to the issuance of any construction permit for work within County Right-of-Way.
5. The contractor shall contact the Utility Notification Center of Colorado at least 48 hours prior to construction.
6. Construction specification: Current edition of the Colorado Department of Transportation Standard Specifications for Road and Bridge Construction, special provisions and revisions thereto, and as amended by Chapter 5 of this MANUAL.
7. The subgrade material shall be scarified or removed to a depth required by Jefferson County per information obtained from laboratory tests and/or as required in the Pavement Design Report. Additives or approved material may be required if the native material is unsatisfactory. The subgrade shall be compacted to a minimum density and moisture content range of 2 percent below optimum to 2 percent above as determined in accordance with AASHTO designation T180 or T99 and in accordance with the Standard Specifications Section 203.07.
8. Class 6 aggregate base course for shoulders shall be placed and compacted 95 percent modified Proctor Test (AASHTO T180) after placement of asphalt.
9. Existing asphalt pavement shall be straight sawcut or bladecut when adjoining with new asphalt pavement. SS-1 tack coat shall be applied to all surfaces.
10. Structural section, including subbase and asphalt, shall be constructed according to the Final Pavement design that has been prepared by the developer's engineer, and approved by Transportation and Engineering according to Chapter 4 of this MANUAL. Existing structural section at the match point shall comply with the minimum Full Depth Asphalt thickness identified in Table 4.3 "Minimum Pavement Sections" of this MANUAL for the respective road classification, regardless of the original thickness of asphalt and / or subbase.

The following notes shall appear in addition to the above for all street construction, as applicable:

1. Concrete may be placed by machine methods if all finish lines are within 1/8" + tolerance of the lines shown on the plans. The flowline must be free draining and comply with this MANUAL.
2. One half (1/2) inch expansion joint material shall be installed when abutting any existing concrete or a fixed structure.
3. The contractor is advised to first obtain inspection of forms by Transportation and Engineering before placing concrete curb, gutter, sidewalk, inlets, and/or other concrete drainage structures.

Chapter 3

Design and Technical Criteria

3.1. General

This section sets forth the minimum design and technical criteria to be used in the preparation of all street/road construction plans. All street/road design shall be in accordance with the current edition of AASHTO Geometric Design of Highways and Streets, unless modified herein.

For this regulation, streets shall be used in the Plains and roads shall be used in the Mountains, except as indicated below:

3.1.1 Roads may be allowed in the Plains in locations with slopes greater than 15%, subject to approval by Planning and Zoning.

3.1.2 Streets may be required in the following Mountains locations as directed by Planning and Zoning: 1) Areas where urban development is projected based on Community Plans designations, 2) Areas where curb and gutter would be needed to mitigate drainage impacts.

3.2. Street/Road Types

3.2.1 Public Streets/Roads: Streets or roads that are owned and maintained by the City, County or State for public use.

3.2.2 Private Streets/Roads: Streets or roads that are owned, maintained, or restricted for the use by a person, group of people, or non-governmental entity.

3.2.3 Non-Maintained Streets/Roads in County ROW: Streets or roads that are owned by the County for public use, but are not constructed to a County public standard and are not County maintained.

3.3. Functional Classification

Jefferson County has adopted a Major Thoroughfare Plan based on traffic volumes, existing and/or zoned land use, and anticipated growth. The Major Thoroughfare Plan designates streets/roads as freeway, parkway, principal arterial, minor arterial, major collector, or collector.

3.3.1. Freeway: A freeway serves major regional traffic movements and carries the highest traffic volume of all classifications. A freeway is planned to have four to six through lanes and may have frontage roads. The movement of traffic takes precedence over access. Access is fully controlled and is allowed only to other freeways or to arterials by grade separated interchanges. Opposing movements on a freeway are separated by a raised or depressed median. Pedestrians and bicycle traffic are physically separated from the travel lanes. A freeway may be developed as a parkway with at-grade intersections as a first phase. Freeways are typically in State jurisdiction.

Design Speed: Special Design Required

3.3.2. Parkway: A parkway serves major regional traffic movements and carries high traffic volumes. A parkway is planned to have four to six through lanes. The movement of traffic takes precedence over access. Access is fully controlled and allowed only to major collector classifications or higher. Grade separation at major intersections is preferred over traffic signals. Opposing movements on a parkway are separated by a raised or depressed median. Pedestrians and bicycle traffic are physically separated from the travel lanes unless a bicycle lane or paved shoulder is designated per the Jefferson County Bicycle Plan as amended.

Design Speed: 40 - 50 MPH

3.3.3. Arterial.

3.3.3.1. Principal Arterial: A principal arterial serves major regional traffic movements and carries high traffic volumes. A principal

arterial is planned to have four to six through lanes in the Plains and four through lanes in the Mountains. The movement of traffic takes precedence over access. Access is controlled and allowed to collectors and higher class facilities is preferred, but some restricted access to major developments may be allowed. Opposing movements are usually separated by a raised, depressed, or painted median. Pedestrians and bicycle traffic may be carried on detached walks and trails unless a bicycle lane or paved shoulder is designated per the Jefferson County Bicycle Plan as amended.

Design Speed: 35 - 45 MPH

3.3.3.2. Minor Arterial: A minor arterial serves intracommunity traffic and carries moderate traffic volumes. Minor arterials are planned to have four lanes in the Plains. In the Mountains, minor arterials are planned to have two lanes, plus turn lanes and passing or climbing lanes where warranted. Neither the movement of traffic nor access takes precedence. Reasonable access is allowed except for private residential driveways. Opposing movements are generally sepa ns and bicycle traffic are usually carried on a detached walk or a er the Jefferson County Bicycle and Pedestrian Plan, as amended

Is this true? Indian just south of HWY 128 is posted 50mph but your GIS shows it as a Minor Arterial.

Design Speed: 30 - 40 MPH

3.3.4. Major Collector: A major collector serves intracommunity traffic and carries moderate traffic volumes. Major collectors are planned to have two lanes, plus turn lanes where warranted, in the Plains and the Mountains. Neither the movement of traffic nor access takes precedence. Reasonable access is allowed except for private residential driveways. Opposing movements are generally separated by a median/turn lane. Pedestrians and bicycle traffic are usually carried on a detached walk or an adjacent trail unless a bicycle lane or paved shoulder is designated per the Jefferson County Bicycle and Pedestrian Plan, as amended.

Design Speed: 30 - 40MPH

3.3.5. Collector: A collector serves neighborhood traffic movements over short distances, generally accessing arterials and major collectors. A collector has two lanes, plus turn lanes where warranted, in the Plains and two lanes in the Mountains. Access takes precedence over the movement of traffic. Reasonable access is allowed except for private residential driveways. Opposing movements are not physically separated. Pedestrian traffic is handled on attached or detached sidewalks in the Plains. No special accommodation is made for bicycle traffic.

Design Speed: 25 - 30 MPH

3.3.5. Local: A local street or road serves neighborhood traffic over very short distances to higher class roadways. A local street or road has two travel lanes. It is always paved in the Plains and usually paved in the Mountains. Access to adjacent land is its primary purpose. All types of access are allowed. Opposing movements are not physically separated. Pedestrian traffic is handled on attached or detached sidewalks in the Plains. No special accommodation is made for bicycle traffic.

Design Speed: 15 - 25 MPH

3.4. Standard Templates

The following templates reflect the minimum section for each street/road classification and for cul-de-sacs. Any additional requirements including, but not limited to, acceleration/deceleration lanes and left turn lanes are not shown.

Template Number	Description	Typical Volume Range in Average Daily Traffic (ADT)	Right-of-Way Width (Feet)
Public Street/Road Templates			
1	Principal Arterial Street	Greater than 25,000	~~130'~~109-127'
2	Minor Arterial Street	15,000 to 25,000	~~100'~~87-101'

3	Major Collector Street	8,000 to 15,000	~~78'~~77-91'
4	Collector Street (36' FL to FL) with Attached Sidewalks	1,000 to 8,000	~~50'~~46-54'
5	Collector Street (36' FL to FL) with Detached Sidewalks	1,000 to 8,000	~~37'~~ 32-40' + 20' easement for sidewalks, maintenance and traffic signs
6	Local Street (34' FL to FL) with Attached Sidewalks	Less than 1,000	50'
7	Local Street (34' FL to FL) with Detached Sidewalks	Less than 1,000	35' + 20' easement for sidewalks, maintenance and traffic signs
8	Local Street (28' FL to FL) with Attached Sidewalks	Less than 350	45'
9	Local Street (28' FL to FL) with Detached Sidewalks	Less than 350	30' + 18' easement for sidewalks, maintenance and traffic signs
Template Number	Description	Typical Volume Range in Average Daily Traffic (ADT)	Right-of-Way Width (Feet)
Public Street/Road Templates			
10	Minor Arterial Road	Greater than 8,000	70'
11	Major Collector Road	2,000 to 8,000	50', 60' for turn lanes
12	Collector Road	1,000 to 2,000	50'
13	Local Road	Less than 1,000	50'
14	Street Cul-de-sac – Option 1 Street Cul-de-sac – Option 2 Street Cul-de-sac – Option 3	See LDR, Section 15	90' 100' 112'
15	Partial Cul-de-sac for Local Streets	See LDR, Section 15	45'R
16	Offset Cul-de-sac for Local Streets	See LDR, Section 15	90'
17	Cul-de-sac for Local Roads	See LDR, Section 15	90'
Private street/road templates and Non-maintained streets/roads in County ROW templates *			
18	Driveway/Private Street/Road & Non-maintained Street/Road in County ROW (No Parking)	See LDR, Section 15	20' minimum
19	Pull Out for Private Road	N/A	n/a
20	Hammerhead Turnaround for Driveway/Private Road	See LDR, Section 15	varies
21	Hammerhead Turnaround for Private Street	See LDR, Section 15	varies

Commented [LW1]: To split out and create separate templates for driveway, private street, and private road

** The "non-maintained streets/roads in County ROW" templates can only be used if the following provisions apply:*

1. *The County is not holding a guarantee a previous development process that would require the construction of a County public standard street/road in the ROW.*
2. *The County does not wish to have the street/road constructed to a County public standard.*
3. *The street/road is not identified on the Jefferson County Major Thoroughfare Plan.*

3.5. Horizontal Alignment

3.5.1. Horizontal Curves: Minimum curve radii for a normal crown section based on design speed are summarized in the table below.

Design Speed (mph)	Minimum Curve Radius (feet)
15	50
20	107
25	198
30	333
35	510
40	762
45	1039
50	Special Design

3.5.1.1. For collector roads, the centerline line radius may be reduced to a minimum of one hundred (100) feet, provided, however, that on a curve with a centerline radius less than four hundred (400) feet, the maximum grade shall be reduced by one (1) percent for each one hundred (100) feet or fraction thereof the radius is reduced.

3.5.2. Super Elevation: Super elevation is required for curves on all principal and minor arterial streets/roads and selected collector streets/roads. Minimum horizontal curve radius, rate of super elevation, and lengths of tangent runout and super elevation runoff shall be in accordance with the recommendations of the current edition of AASHTO Geometric Design of Highways and Streets.

Super elevation shall not be used on local streets, but may be used on local roads.

3.5.3. Sight Distance: Horizontal alignment must provide at least the minimum stopping sight distance for the design speed at all points. This includes visibility at intersections, as well as around curves and roadside encroachments. Where an object off the traveled surface restricts sight distance, the minimum radius of curvature is determined by the stopping sight distance. A likely obstruction may be a bridge abutment, retaining wall, cut slope, landscaping, or side or corner of a building. In considering sight distance, it shall be assumed a 6'-0" fence (as measured from finished grade) exists along all property lines except in the sight distance triangles required at all intersections. Minimum stopping sight distance (measured from the centerline of the inside lane) shall be as follows for centerline grades equal or less than 3%:

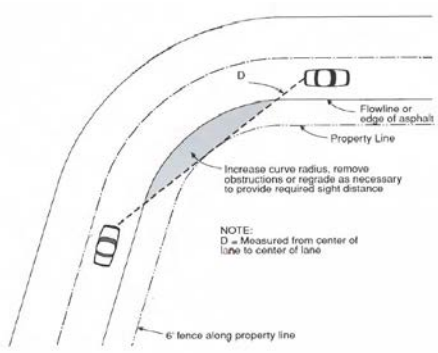

Design Speed (mph)	Stopping Sight Distance (d) (feet)
15	80
20	115
25	150
30	200
35	250
40	325
45	400
50	475

For grades greater than 3%, stopping distance shall be in accordance with the recommendations of the current edition of AASHTO Geometric Design of Highways and Streets.

3.6. Vertical Alignment

3.6.1. Grades: The minimum grade for all new streets and roads is 2%, except within a sag. A minimum flowline grade of 1.5% shall be maintained around all full and partial cul-de-sac bulbs, except within a sag. Planning and Zoning may approve grades as low as 1% if existing conditions make it infeasible to construct a minimum of 1.5%. The maximum grade for all public streets is 6.0% and for public roads is 8.0%. The maximum grade for public roads may be increased to 10% where the dip of the natural terrain bears between South 60° East and South 45° West.

3.6.2. Intersection Grades: The maximum grade at intersections shall be in accordance with the following figure and table. Grades and lengths apply to the street/road controlled by a stop sign. At signalized and uncontrolled intersections, grades and lengths apply to all legs of the intersection.

	Through Street / Road		
Intersection Street/Road	Local	Collector	Major Collector/Arterial
Local	50' @ 4%	100' @ 4%	100' @ 4%
Collector	-	100' @ 3%	200' @ 2%
Major Collector/Arterial	-	-	200' @ 2%

3.6.3. Changing Grades. Continuous grade changes shall not be permitted. The use of grade breaks in lieu of vertical curves is discouraged; however, if a grade break is necessary and the algebraic difference in grade (A) does not exceed four-tenths (0.40) of a percent along the street/road, the grade break will be permitted.

The maximum grade break allowed at the point of tangency at a curb return for local and collector streets shall be two (2) percent and a maximum of one (1) percent for arterial streets.

3.6.4. Vertical Curves. All vertical curves shall be symmetrical. A vertical curve shall be used when the algebraic difference in grade (A)

Where did these come from? They don't seem to match Green Book

equals or is greater than four-tenths (0.40) of a percent. The minimum grade within a ns (0.50) of a percent. All vertical curves shall be labeled, in the profile with curve length (L) and K es for crest and sag vertical curves shall be in accordance with the following table:

	Minimum K Value	
Design Speed (mph)	Crest	Sag
30	30	40
35	50	50
40	80	70
45	120	90
50	160	110

Table 3-35. Design Controls for Crest Vertical

U.S. Customary			
Design Speed (mph)	Stopping Sight Distance (ft)	Rate of Vertical Curvature, Ka	
		Calculated	Design
15	80	3.0	3
20	115	6.1	7
25	155	11.1	12
30	200	18.5	19
35	250	29.0	29
40	305	43.1	44
45	360	60.1	61
50	425	83.7	84
55	495	113.5	114
60	570	150.6	151
65	645	192.8	193
70	730	246.9	247
75	820	311.6	312
80	910	383.7	384

Table 3-37. Design Controls for Sag Vertical Cu

U.S. Customary			
Design Speed (mph)	Stopping Sight Distance (ft)	Rate of Vertical Curvature, K^a	
		Calculated	Design
15	80	9.4	10
20	115	16.5	17
25	155	25.5	26
30	200	36.4	37
35	250	49.0	49
40	305	63.4	64
45	360	78.1	79
50	425	95.7	96
55	495	114.9	115
60	570	135.7	136
65	645	156.5	157
70	730	180.3	181
75	820	205.6	206
80	910	231.0	231

3.6.5. Connection with Existing Streets/Roads

3.6.5.1. Connection with existing roadways shall be smooth transitions conforming to n on 3.6.4. of these standards) if the algebraic difference in grade (A) between the existing and p .40) of a percent. When a vertical curve is used to make this transition, it shall be fully accompl e existing improvement, and comply with the grade requirements at intersection approaches.

3.6.5.2. Existing grade shall be shown for at least three hundred (300) feet with field verified as-builts showing stations and elevations at twenty-five (25) foot intervals. In the case of connection with an existing intersection, these as-builts are to be shown within a three hundred (300) foot radius of the intersection. This information will be included in the plan and profile that show the proposed roadway.

3.6.5.3. Previously approved designs for the existing improvement are not an acceptable means of establishing existing grades; however, they are to be referenced on the construction plan where they occur.

3.6.5.4. The basis of the as-built elevations shall be the same as the design elevations (both flowline or top of curb, etc.) unless otherwise approved by Planning and Zoning.

3.7. Intersection Spacing, Vision Clearance Triangle, ~~and~~ Sight Distance, Driveways and Private Streets/Roads

3.7.1. Intersection Spacing: Spacing of intersections (measured centerline to centerline) shall be in accordance with the following table:

Proposed Street/Road: Existing Street/Road	Minimum Separation (feet)
Local: Local or Collector	175
Local: Arterial or Major Collector	500
Collector: Collector	230
Collector: Major Collector or higher	1000
Major Collector: Major Collector	660
Major Collector: Arterial or higher	1320
Arterial: Arterial or higher	5,280'

3.7.2. Vision Clearance Triangle: The table below shows where a vision clearance triangle must be provided.

Required	Not Required
Street/Road Intersections	Intersection of internal drive isles in non-residential*
Intersections of non-residential driveways with streets/roads	Multi-family and townhome developments*
Intersections of multifamily and/or townhome residential drive isles with streets/roads	
Intersections of street/roads and railroad Right-of-Way	

** Layout of these types of developments should not impede a driver's ability to see on-coming vehicles and pedestrians at intersections*

As illustrated below, the vision clearance triangle must provide an unobstructed view across the triangle formed by the Right-of-Way/property line or easement line adjacent to a street or road as illustrated. The vision clearance triangle may also be formed by the flowline adjacent to a street or road as illustrated below subject to approval by Planning and Zoning. The approval of the vision clearance triangle formed by a flowline is predicated on a fully built-out street or road and existing Right-of-Way that exceeds the Right-of-Way requirements in the Land Development Regulation. Within the area of the triangle, there shall be no fence, wall, landscaping, structure or other obstruction to view more than ~~forty-two~~thirty-six (~~42~~36) inches in height~~, or trees with foliage or signs lower than eight (8) feet in height~~ (measured from the flowline or edge of pavement on the street/road surface). The allowable height of ~~forty-two~~thirty-six (~~42~~36) inches is determined by measuring from the flowline or edge of pavement, as applicable. For example, the grade on a lot within the triangle is 12'' higher than the flow line of a gutter, the allowable height of landscaping would be 30" on the property.

Why are you removing this? We have this in our specs and I am interested in reason for change to know if we should include this in our next update.

Note that if there is any conflict between this provision (3.7.2) and the Sight Distance provision (3.7.2.1) of this MANUAL, the Sight Distance provision shall take precedence. Note that if a physical median exists or is proposed at an access point restricting or eliminating a conflict point, the Vision Clearance Triangle requirements will not apply where no conflict points exist.

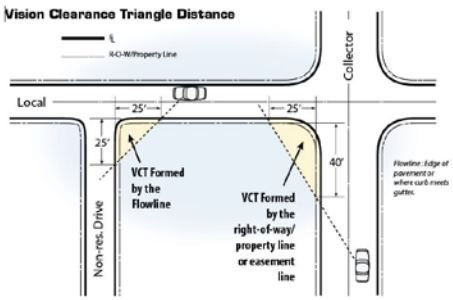

Street/Road Classification	Required Distance from Intersection
Non-residential drive	25'
Local	25'
Collector	40'
Major Collector/Arterial/Parkway	55'
Railroad Right-of-Way	55'

3.7.2.1. Sight Distance: At any street/road intersections or multifamily residential, commercial and industrial site driveways, an unobstructed view as defined above must be provided across the area formed by the flowline or edge of pavement on one street/road and the flowline or edge of pavement of the intersecting street/road (or edge of driveway) and lines (labeled d1 or d2 on the Sight Distance figure) connecting them at ten (10) feet from their point of intersection. This area will be used to ensure that drivers of vehicles exiting from the stopped approach have the minimum required sight distance available. The minimum required sight distance shall be in accordance with the Minimum Sight Distance Requirements table for two lane streets/roads.

How did you get these numbers? They don't match Green Book or CDOT?

Minimum Sight Distance Requirements

(in feet) for vehicles entering onto two-lane streets/roads:

Operating Speed (mph)	Left Sight Distance d1 *	Right Sight Distance d2 **
20	220	130
25	260	170
30	350	260
35	430	350
40	530	440
45	610	570
50	740	700

** Measured from the driver's eye ten feet back of the flowline or pavement edge to the vehicle approaching in the outside lane.*

*** Measured from the driver's eye ten feet back of the flowline or pavement edge to the vehicle approaching in the median lane.*

Vehicle expected to enter or cross highway as determined from table 4-3	Posted Speed of Roadway in MPH									
	25	30	35	40	45	50	55	60	65	70
Two Lane Roadway										
Passenger Cars, Pickup Trucks	250	300	350	400	450	500	550	600	650	700
Single Unit Trucks Over 10,000 lb GVW	325	390	455	520	585	650	715	780	845	910
Multi-Unit Trucks	425	510	595	680	765	850	935	1020	1105	1190
Four Lane Roadway										
Passenger Cars, Pickup Trucks	300	360	420	480	540	600	660	720	780	840
Single Unit Trucks Over 10,000 lb GVW	375	450	525	600	675	750	825	900	975	1050
Multi-Unit Trucks	500	600	700	800	900	1000	1100	1200	1300	1400

Table 9-7. Design Intersection Sight Distance—Case B1, Left Turn

U.S. Customary				
Design Speed (mph)	Stopping Sight Distance (ft)	Intersection Sight Distance for Passenger Cars		Design Speed (km/h)	Stopping Sight Distance (m)
		Calculated (ft)	Design (ft)		
15	80	165.4	170	20	20
20	115	220.5	225	30	35
25	155	275.6	280	40	50
30	200	330.8	335	50	65
35	250	385.9	390	60	85
40	305	441.0	445	70	105
45	360	496.1	500	80	130
50	425	551.3	555	90	160
55	495	606.4	610	100	185
60	570	661.5	665	110	220
65	645	716.6	720	120	250
70	730	771.8	775	130	285
75	820	826.9	830		
80	910	882.0	885		

Table 9-9. Design Intersection Sight Distance—Case B2, Right Turn

U.S. Customary					
Design Speed (mph)	Stopping Sight Distance (ft)	Intersection Sight Distance for Passenger Cars		Design Speed (km/h)	Stopping Sight Distance (m)
		Calculated (ft)	Design (ft)		
15	80	143.3	145	20	20
20	115	191.1	195	30	35
25	155	238.9	240	40	50
30	200	286.7	290	50	65
35	250	334.4	335	60	85
40	305	382.2	385	70	105
45	360	430.0	430	80	130
50	425	477.8	480	90	160
55	495	525.5	530	100	185
60	570	573.3	575	110	220
65	645	621.1	625	120	250
70	730	668.9	670	130	285
75	820	716.6	720		
80	910	764.4	765		

Note: Intersection sight distance shown is for a stopped passenger car to tu
a two-lane roadway with no median and with grades of 3 percent or l

1 et/road or driveway.

2 5-foot height of the approaching vehicle.

3. The operating speed of the approaching vehicle is assumed to be the posted speed limit.

4. Sight distance requirements as shown in the Minimum Sight Distance Requirements table are designed to enable vehicles entering the street/road to accelerate to the operating speed of approaching vehicles without causing the approaching vehicles to reduce speed by more than 10 mph.

5. Truck traffic (WB30 or larger) entering onto streets/roads requires longer sight distances than shown in Table. Any proposed public or private street/road or driveway regularly used by truck traffic may require an individual analysis.

6. When the criteria for sight distances cannot be met, the County may deny the access, prohibit left turns by vehicles entering the street/road or require speed change lanes.

3.7.3. Right Turn Lanes

3.7.3.1. Right Turn Acceleration Lanes: Right turn acceleration lanes may be required based on an approved transportation study. Right turn acceleration lanes may also be required where necessary for public safety and traffic operations based upon site specific conditions,

What is your Warrants for needing turn lanes? CDOT? Harmelink?

as determined by Planning and Zoning.

3.7.3.2. Right Turn Deceleration Lanes: Right turn deceleration lanes are required at arterial intersections and at driveways on arterial streets/ roads as needed based on required transportation study/analysis. Transportation study/analysis shall address storage, as applicable. Right turn deceleration lanes may also be required where necessary for public safety and traffic operations based upon site specific conditions, as determined by Planning and Zoning.

3.7.3.3. If the proposed street/road intersection or driveway is within two different speed zones, the criteria for the higher speed zone apply.

3.7.3.4. Where there are three or more through lanes in the direction of travel, right turn acceleration and deceleration lanes will be required only when determined necessary by Planning and Zoning due to high traffic volume or other site specific safety considerations.

3.7.3.5. Taper and lane lengths shall be in accordance with the following criteria.

Deceleration Right Turn Lanes

Design Speed (M.P.H.)	Taper Length (For 11' Lane Width)	Lane Length	Total Length* (Taper Length + Lane Length)
25	80'	120'	200'
30	100'	150'	250'
35	120'	190'	310'
40	140'	230'	370'
45	160'	280'	440'
50	180'	320'	500'

**At signalized intersections, where storage is needed for right-turning vehicles, additional length shall be provided to accommodate the average number of vehicles anticipated.*

Acceleration Right turn Lanes

Design Speed (M.P.H.)	Taper Length (For 11' Lane Width)	Lane Length	Total Length (Taper Length + Lane Length)
30	120'	190'	310'
35	120'	270'	390'
40	180'	380'	560'
45	180'	550'	730'
50	240'	760'	1000'

3.7.3.6. A continuous accel/decel lane may be required if the acceleration lane for one access and the deceleration lane for another access overlap or are in close proximity to each other.

3.7.3.7. The minimum pavement width for acceleration and deceleration lanes shall be eleven (11) feet, excluding gutter pan or shoulder.

3.7.3.8. Grade correction factors are required where street/road grades are steeper than three (3) percent.

3.7.4. Left-Turn Lanes: Left-turn lanes are required at all arterial and major collector street/road intersections and at driveways on major collector/arterial streets/roads. Design of left-turn lanes shall be in accordance with the following criteria.

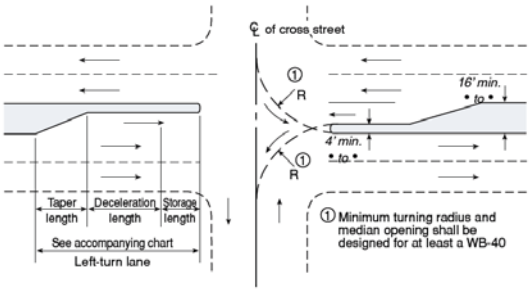

Left-Turn Lanes

Design Speed (M.P.H.)	Taper Length (For 11' Lane Width)	Decel Length	Total Length
30	100'	150'	*250'
40	140'	230'	*370'
45	160'	280'	*440'
50	180'	320'	*500'

**Plus storage length*

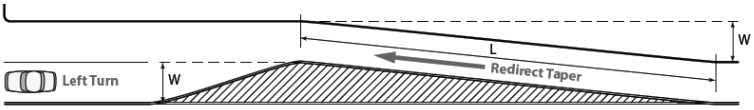

L = Total required redirect taper length
S = Posted or operating speed
W = Transition offset distance

$L = \frac{WS^2}{60}$ Speeds under 45 miles per hour

L = WS Speeds of 45 miles per Hour and over

3.7.4.1. Storage Lengths: Storage lengths for signalized and unsignalized intersections shall be determined by an approved transportation analysis or transportation study, as applicable.

3.7.4.2. Median Design: Other left-turn median designs such as reverse curve taper, offset approach nose and double left-turn lanes must be approved by Planning and Zoning and shall conform to AASHTO standards.

3.7.5. Curb Returns

3.7.5.1. The table below provides the minimum street/road intersection radii measured to flowline or edge of pavement where no curb and gutter is required.

Curb Return Radii (R) To Flowline

Intersecting Street	Principal Arterial	Minor Arterial	Major Collector	Collector	Local
Principal Arterial	Special Design*	Special Design*	40'	40'	30'
Minor Arterial	Special Design*	Special Design*	30'	30'	25'
Major Collector	40'	30'	30'	30'	25'
Collector	40'	30'	30'	25'	20'
Local	30'	25'	25'	20'	20'/15'

**Special Design should provide consideration for right turn channelization.*

3.7.5.1.1. At driveway locations where curb returns are used, the minimum radii allowed on arterials and major collectors shall be twenty-five (25) feet.

3.7.5.1.2. At driveway or private access locations where there is no curb and gutter, the minimum radii (measured to edge of pavement) allowed on arterials and major collectors shall be twenty-five (25).

3.7.5.2. The minimum elevation difference (fall) around curb returns (PCR to PCR) for flow along the curb line shall be as follows:

Radius	Minimum Fall
15'	0.3'
20'	0.4'
25'	0.5'
All Others	1.27% of length from PCR to PCR

3.7.5.3. The maximum fall around curb returns shall be equal to the steepest grade coming into or out of the return multiplied by the return length, + 0.2 feet.

3.7.5.4. Curb Return Profiles: Curb return profiles are required for radii equal to or greater than thirty (30) feet within the public Right-of-Way. A midpoint elevation along the arc length of the curb return shall be shown in plan view for radii equal to or greater than twenty-five (25) feet. Curb return design shall be set in accordance with the following design procedure. General standards for flowline control and profiles within the curb returns shall be as follows:

3.7.5.4.1. The point of tangency at each curb return shall be determined by the projected tangent grade beginning at the point of intersection (P.I.) of the flowlines.

3.7.5.4.2. The arc length and external distance of the curb return shall be computed and indicated on the drawing.

3.7.5.4.3. Show the corresponding flowline (or top of curb) grade for each roadway beyond the P.C.R.

3.7.5.4.4. Design of the curb return flowline shall be such that the maximum cross slope between the midpoint of the curve and the PICR (external distance) does not exceed +5 percent. Grade breaks at the PCR's will not exceed two (2) percent for local and collector streets and one (1) percent for arterials. The flowline design of the curb return will be accomplished within the return without affecting street grades beyond the PCR. Maximum vertical curves will equal the arc length of the curb return. The elevation and location of the high or low point within the return, if applicable, is to be called out in the profile.

3.7.5.4.5. Scale for the curb return profile is 1" = 10' horizontally and 1" = 1' vertically. See Section 2.4.6.

3.7.6. Driveway Spacing

Opposing and adjacent driveway locations shall be in accordance with the following figure and table. The minimum spacing shall be increased as necessary to accommodate left turn storage bays. Offset of opposing driveway locations is not required if driveways are physically constrained to right-in, right-out.

NOTE: Flowline of curb/gutter or edge of asphalt if curb/gutter does not exist or edge of shoulder if asphalt does not exist.

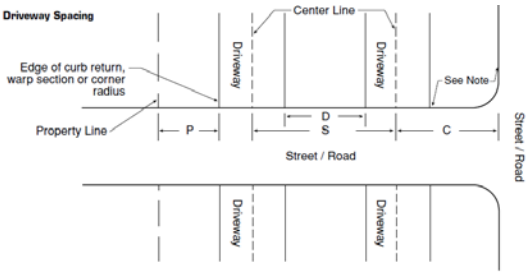

	Figure Reference	Distance
Residential Driveways		
From property lines	P	0'
From streets/roads	C	30'
Between driveways	N/A	0'
On local streets/roads	D	10'
On collector streets/roads	S	80'***
On major collector/arterial streets/roads	S	325'
Non-Residential Driveways on Locals/Collectors		
From property lines	P	0'
From major collectors/arterial streets/roads	C	300' *
From collector streets/roads	C	200' *
From local streets/roads	C	125'
Between driveways		
30 MPH design speed	S	180'
35 MPH design speed	S	200'
Non-Residential Driveways on Major Collectors/Arterials/Parkways		
From property lines	P	0'
From streets/roads	C	500' **
Between driveways		
40 MPH design speed	S	275'

I really like this. How did you get these numbers? Broomfield may look at stealing some of this info in our next specs update.

45 MPH design speed	S	325'

** The C dimension may be reduced if approved by Planning & Zoning Division due to the existence of limiting factors. The minimum distance shall be no less than 150 feet.*

*** If the proposed driveway is restricted to right turn movements or if it is not aligned with an existing or planned left turn lane, the C dimension may be reduced if approved by Planning & Zoning Division due to the existence of limiting factors. If signalization is proposed, the minimum C distance shall be increased to 660 feet.*

****May be reduced for circular driveways or driveways with a standard hammerhead turnaround If approved by Planning and Zoning.*

3.7.7. Channelizing Islands The following figures illustrate the minimum design for channelizing islands for site accesses with various turn movement restrictions.

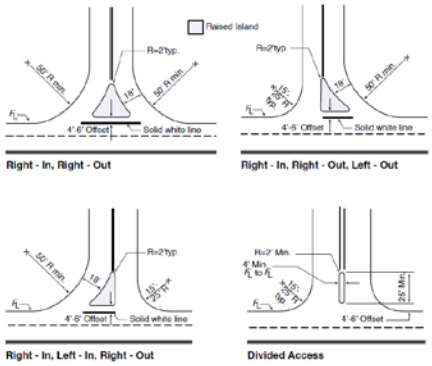

3.7.7.1. Non-rigid post mounted delineators are required on raised islands.

3.7.7.2. Curb ramps four (4) feet wide, with a maximum slope of 12:1, are required and shall be shown on the plans.

3.7.8. Non-Maintained Roads in County Right-of-Way, Driveways, and Private Street/Road~~s, and Non-Maintained Roads in County Right-of-Way~~ Standards.

3.7.8.1. Driveways serving one dwelling unit shall meet the following standards (Template 18):

Exception: If the length of the driveway in the Plains is less than or equal to 50 feet, Sections 3.7.8.1.1. through 3.7.8.1.4. do not apply.

3.7.8.1.1. Curve Radius: Minimum horizontal curve radius of 30 feet at centerline.

3.7.8.1.2. Width: A total width of 14 feet, including a 10-foot all-weather travel surface and two-foot shoulders on either side in accordance with Template 18.

~~or i~~If the length of the driveway in the Mountains exceeds ~~150~~ 500 feet ~~in length~~, and is a total width of 14 feet, including a 10-foot all-weather travel surface and two-foot shoulders on either side, then pullouts shall be required at 200-foot intervals in accordance with Template 19. Due to site constraints, this 200-foot interval could be modified by 50 feet in either direction. Alternatively, if pullouts are not desired, a total width of 16 ft, including a 12-foot all-weather travel surface and two-foot shoulders on either side is ~~required in accordance with Template 18~~allowed.

3.7.8.1.3. Grade: Maximum grade of ten (10) percent on straight sections and twelve (12) percent ~~grade~~ where the dip of the natural terrain bears between South 60° East and South 45° West. Maximum grade of eight (8) percent for curves with radius of less than or equal to 50 feet at centerline.

Exception~~s~~: In the Mountains, a maximum grade of fifteen (15) percent on straight sections for a maximum length of one hundred (100)

Formatted: Indent: Left: 0"

feet is allowed provided the appropriate fire sprinkler systems are installed per the National Fire Protection Association (NFPA) 13D - Standard for the Installation of Sprinkler Systems in One- and Two-Family Dwellings and Manufactured Homes. There may be more than one section up to 15% provided ~~if it is separated~~they are separated by a distance of 1000 feet.

~~3.7.8.1.4. If the length of the driveway in the Plains is less than or equal to 50 feet, Sections 3.7.8.1.1. through 3.7.8.1.34. do not apply.~~

3.7.8.1.~~5~~4. Turnaround: If the length of the driveway exceeds 150 feet, a hammerhead turnaround shall be provided in accordance with Template 20. ~~and the~~~~The location of the turnarounds shall be approved by the appropriate fire protection district.~~

Commented [NS2]: I don't think we want this included any longer.

3.7.8.2. Private streets/roads serving more than one dwelling unit and non-maintained streets/roads~~s~~ in county Right of Way shall meet the following standards:

3.7.8.2.1. Curve Radius: Minimum horizontal curve radius of 30 feet at centerline.

3.7.8.2.2. Width (For a street/road serving up to 15 dwelling units): A total width of 20 feet, including a 16-foot all-weather travel surface and two-foot shoulders on either side in accordance with Template 18~~ for roads serving up to 15 dwelling units~~. Alternatively, ~~for a private road~~ a total width of 14 feet, including a 10-foot travel~~ed~~ surface, two-foot shoulders on either side, and pullouts at ~~150~~ 200 foot intervals in accordance with Template 19. Due to site constraints, this 200 foot interval could be modified by 50 feet in either direction.

3.7.8.2.2.1~~3~~. Width (For a street/road serving 16 or more dwelling units or one or more non-residential units): A total width of 24 feet, including an 18-foot paved surface and three-foot shoulders on either side in accordance with Template 18. ~~for roads serving 16 or more dwelling units or one or more non-residential units.~~

3.7.8.2.3~~4~~. Grade: Maximum grade of ten percent on straight sections~~:~~. Maximum 12 percent grade where the dip of the natural terrain bears between South 60° East and South 45° West. Maximum grade of eight percent for curves with radius of less than or equal to 50 feet at centerline.

Exception~~s~~: In the Mountains,~~3.7.8.2.5~~ a m~~M~~aximum grade of fifteen (15) percent on straight sections for a maximum length of one hundred (100) feet is allowed provided the appropriate fire sprinkler systems are installed per NFPA 13D, for all new dwellings the street/road serves. There may be more than one section up to 15% provided it is separated by a distance of 1000 feet.

3.7.8.3. ~~The appropriate fire protection district may approve alternative standards for driveways and private roads. Plans shall be submitted that bear the written approval of the appropriate fire protection district.~~The off-site driveway or private road shall meet the requirements as described in this section. If the off-site driveway or private road ~~does not~~cannot meet the requirements of this section, the following shall be submitted to Planning and Zoning:

1) A letter with a written description of the existing conditions and documentation of why the off-site driveway or private road cannot meet the requirements,

2) Plans showing the existing conditions of the off-site driveway or private road and/or proposed design,

3) A certified statement by a qualified Colorado-registered professional engineer indicating that the off-site driveway or private road will be able to serve the residents effectively and safely. This statement shall include a detailed explanation of how an emergency apparatus within the appropriate Fire Protection District will be able to serve a residence safely and effectively.~~ and will be safe for fire apparatus.~~ Such statement shall bear the professional engineer's seal, signature and date, and

Commented [NS3]: Should this inlcude evidence that apparatus can make it up the road. Either with autoturn or turning radius templates.

4) A written statement from the property owner that a fire sprinkler system will be installed per NFPA 13D at the time of Building Permit.

These submittal documents will be required to be reviewed and approved by Planning and Zoning prior to issuance of a building permit. Planning and Zoning may consult directly with the appropriate Fire District when evaluating offsite driveways or private roads which cannot meet the requirements of this section.~~–~~

3.7.8.4. Driveway approaches and private road intersections with public roads must comply with Standard 8 - Driveway and Private Transportation Design and Construction Manual – Amended ~~12-17-19~~XX-XX-XX

Road Approaches onto Roads.

3.7.8.5. Cattle guards shall conform to the current edition of the CDOT M&S Standard Plans and approved by the appropriate fire protection district.

3.7.8.6. All gates and entry-way structures shall be approved by the appropriate fire protection district.

3.7.8.7. All streets in the Plains are required to be paved.

3.8. Drainage

All storm drainage systems shall be designed in accordance with Jefferson County Storm Drainage Design and Technical Criteria (JCSDDTC). Safe and efficient conveyance of traffic is the primary function of streets/roads; therefore, design of the storm drainage function shall not exceed the limits (such as gutter capacity and street overtopping) set forth in the JCSDDTC. All new or repaired storm sewer pipe and associated structures within County Right-of-Way and/or easements shall be constructed with trace wire and test locations. Installation shall be tested for operation and documented with Form Letter "T", in accordance with Jefferson County Land Development Regulation Section 33.

3.8.1. Crosspans: Crosspans are not permitted across collector or arterial streets, nor are they allowed on streets with existing storm sewer systems. Crosspans may be used parallel to collector or arterial streets to convey storm runoff across local streets.

3.8.2. Inlets: Inlets shall be located to intercept gutter flow at the point gutter capacity is exceeded by the storm runoff (see Chapter 9 of the JCSDDTC for gutter capacity). Inlets shall also be installed to intercept cross-pavement flows at points of transition in superelevation. Due to the presence of curb ramps at intersections, inlets are not allowed within the curb return, but shall be located at the tangent points of the curb return.

3.8.3. Cross Slope: Except at intersections, or where superelevation is required, streets/roads shall be level from top of curb to top of curb (or flowline to flowline) and shall have a two (2) percent crown. At or within 150' of an intersection, the maximum elevation difference between flowlines is that dictated by the intersection grade (Section 3.5.2.) and the actual distance between flowlines.

3.8.3.1. Parabolic or curved crowns are not allowed. In no case shall the pavement cross slope at warped intersections exceed the grade of the through street.

3.8.3.2. Carrying the crown at a side street into the through street is permitted only when drainage considerations warrant such a design.

3.8.3.3. The rate of change in pavement cross slope, when warping side streets at intersections, shall not exceed one (1) percent every twenty-five (25) feet horizontally on local streets/roads, one (1) percent every thirty-seven and one-half (37.5) feet horizontally on collector streets/roads, or one (1) percent every fifty-six and one-half (56.5) feet horizontally on arterial streets/roads.

3.8.4. Temporary Erosion Control: Temporary erosion control is required along and at the ends of all roadways that are not completed due to project phasing, subdivision boundaries, etc., in accordance with the Jefferson County Zoning Resolution, Section 15.

3.8.5. Cross Culverts: Cross culverts shall be installed at locations where roads cross natural drainageways and/or where changes in road grade are greater than two (2) percent. The culvert slope shall match as nearly as possible that of the existing topography, but shall in no case be less than one (1.0) percent. Cross culverts for roads shall be spaced a maximum of five hundred (500) feet apart.

3.9. Traffic Control

3.9.1. Construction Traffic Control: Traffic safety in construction zones should be an integral element of every project from planning through design and construction. Pedestrian, as well as vehicular traffic, should be considered in the design of a traffic control plan. A traffic control plan shall be submitted to and approved by Transportation and Engineering prior to issuance of a construction permit.

Design of all traffic control plans shall be in accordance with Part VI of the Manual on Uniform Traffic Control Devices, Standards for Work Zone Traffic Control. All necessary signs, pavement markings, barricades, etc. shall be shown on the plan.

Do you have any time constants on Traffic Control? For example Broomfield does not allow TC on arterials between 7-9a and 4-6p. We also have restrictions around schools during school drop off pick up times.

3.9.2. Traffic Signals: Traffic signals shall be installed at street/road intersections or site accesses identified as meeting warrants in the traffic study submitted for a proposed development. If the proposed signal location is within twelve hundred (1,200) feet of any adjacent signal, a two-way progression analysis shall be included in the traffic study.

Design of all traffic signals shall be in accordance with the Manual on Uniform Traffic Control Devices and the Colorado Department of Transportation Standards and Specifications. Traffic signal plans shall be submitted to and approved by Planning and Zoning.

Traffic signal poles shall not be installed within sidewalks or curb ramps.

3.9.3. Signing and Striping: Plans are required for signing/ striping of new streets/roads and re-signing/striping of existing streets/roads necessitated by development. All signing/striping plans shall be in accordance with the Manual on Uniform Traffic Control Devices (MUTCD) and shall be submitted as part of the construction plans.

3.9.3.1. The signing plan shall:

1. Show the general longitudinal location of each existing and proposed sign (by side of street/road and station).
2. Specify the sign legend and sign type (from the MUTCD).
3. Specify the sign size.
4. Include a typical detail of installation dimensions (height, distance from curb or edge of pavement).
5. Include a detail of post and base dimensions and installation plan (showing any wedges or sleeves, depth below surface, any materials used).
6. Specify the blank gauge and material of the sign(s).
7. Note the reflectorization provided.

3.9.3.2. The striping plan shall show:

1. Striping material (paint, thermoplastic, preformed tape, etc.).
2. Color designation and line width.
3. Lane width.
4. Proposed and existing lane striping including skip interval.
5. Typical treatments for accel/decel lanes, turning lanes, bike lanes and crosswalks.

3.9.3.1. Stop signs shall be placed at intersections in accordance with the MUTCD, unless otherwise approved by the Director of Planning and Zoning.

3.9.3.2. All street/road name signs shall be in accordance with the current edition of DRCOG "Guidelines for the Design and Placement of Street Signs in the Denver Region".

3.10. Miscellaneous

3.10.1. Guardrail: In locations where guardrail is required, as determined by Planning and Zoning, design shall be in accordance with the Colorado Department of Transportation Standards and Specifications. Determination of guardrail requirements shall be based on Colorado Department of Transportation Roadway Design Manual, Section 702. Guardrail locations shall be shown on the construction plans.

3.10.2. Noise Attenuation: In locations where arterial streets/roads are adjacent to existing or planned residential areas, fencing and/or other noise attenuation measures are required. These measures may include, but are not limited to, earth beams, landscaping, walls, or a combination.

3.10.3. Street Lighting: Street lights shall be provided at all parkway/arterial/major collector street/road intersections. In addition, street lights shall be provided at all locations where multifamily residential, commercial or industrial site driveways intersect

parkway/arterial/major collector streets/roads. Street lights shall be designed in accordance with the most recent ANTI/ICES Roadway Lighting Standards and installed in accordance with Public Service Company of Colorado standards. Light poles shall not be installed within sidewalks or curb ramps.

3.10.4. Roundabouts: Roundabouts may be constructed subject to an approved traffic study. Roundabouts shall be designed in accordance with the current edition of the Federal Highways Administration Publication, Roundabouts: An Informational Guide, and approved by Transportation and Engineering and the appropriate fire protection district.

3.10.5. Bridges: Bridges shall be designed in accordance with CDOT Bridge Manuals and approved by Transportation and Engineering and the appropriate fire protection district.

3.10.6. Curb Extensions (mid-block and corner) and Pedestrian Refuge Islands: Curb extensions and pedestrian refuge islands shall be designed in accordance with the current version of the Federal Highway Administration Bicycle and Pedestrian Report and approved by Transportation and Engineering and the appropriate fire protection district.

Chapter 4

Pavement Design and Technical Criteria

4.1. General

This section sets forth the minimum criteria and design procedures for public and private roadway pavements. Recommended design methodologies for asphalt are addressed and essentially follow the Colorado Department of Transportation (CDOT) and the Asphalt Institute methodology. Some standardization of criteria has been made in design procedures. Other design methodologies may be presented for comparison to the current County design method.

4.2. Pavement Design Report Submittal

4.2.1 Preliminary Pavement Design: A Preliminary Pavement Design shall be used for estimating purposes only to determine the financial security "Exhibit A" associated with development projects. Three standardized Preliminary Pavement Designs corresponding to three zones of unique geotechnical characteristics within Jefferson County are presented in Construction Standard 16-18. Construction Standard 19 shows each of the three zones. Zone 1 corresponds with materials associated with decomposing granite in the higher elevation foothills and mountains. Zone 2 addresses highly expansive clay and claystone material within the Designated Dipping Bedrock Area with edge drains. Zone 3 involves non-cohesive soil and weathered bedrock along the Front Range. The Preliminary Pavement Design shall be replaced with the Final Pavement Design, and the associated "Exhibit A" financial security costs recalculated, after County approval of the Final Pavement Design Report.

4.2.2 Final Pavement Design:

The final pavement design shall be completed and submitted after or in conjunction with County approval of the associated construction plans. All soil samples must be taken after overlot grading,or represent the "as-constructed" soil conditions after construction has been completed. Pavement design approval is required prior to placement of any concrete flatwork and/or paving within County Right-of-Way.

The report shall be prepared by or under the supervision of and signed by a Professional Engineer registered in the State of Colorado and shall include the following information:

A. Vicinity map to locate the investigated area.

B. Scaled drawings showing the location of borings, and required information stated in 4.3.2.

C. Scaled drawings showing the estimated extent of subgrade soil types and Equivalent Daily Load Application (EDLA) for each street.

D. Pavement design alternatives for each street on a scaled drawing.

E. Tabular listing of Sample Designation, Sample Depth, Composite Group Number, Liquid Limit, Plasticity Index, Percent Passing the No. 200 sieve, American Association of State Highway and Transportation Officials (AASHTO) Classification, Group Index, Percent Swell from Swell Consolidation tests, and Soil Description.

F. California Bearing Ratio (CBR) or R-value test results and calculations for each soil type used in the design. Include natural moisture content and natural density.

G. Pavement design nomographs supplied by Jefferson County properly drawn to show Soil Support, EDLA and Structural Number (SN).

H. Design calculations for pavement thickness.

I. Percentage water soluble sulfates, sampled at a minimum of every other boring.

J. A discussion regarding potential subgrade soil problems including, but not limited to:

1. heave or settlement prone soils
2. frost susceptible soils
3. ground water
4. drainage considerations (surface and subsurface)
5. cold weather construction (if appropriate)
6. other factors or properties which could affect the design or performance of the pavement system

K. Recommendations to alleviate or mitigate the impact of problems discussed in Item J above.

4.3. Subgrade Investigation

4.3.1 Field Investigation: The field investigation shall consist of boring soils to a depth of at least five feet below the bottom of the proposed asphalt pavement layer elevation for roads classified as Local or Collector. Borings shall extend 10 feet below the bottom of the proposed asphalt pavement layer elevation on Major Collector / Minor Arterial and Major Arterial roadways. In all cases borings shall be spaced no more than 250 feet apart, or a minimum of one boring for each section of street, unless otherwise required by Transportation and Engineering. The borings shall be checked for ground water at the time of drilling, and then 24-hours after the borings are completed. Samples shall be taken after overlot grading is completed and the subgrade is "rough cut" (1 to 2 feet of proposed elevation). Soil classifications shall be verified after installation of utilities.

Geological features within five feet of the existing ground surface, and all new roadways proposed in the Dipping Bedrock Area, require more detailed investigation including drilling and/or trenching. Every third bore hole shall be a minimum of 10 feet deep, regardless of the road classification.

California Drive samples shall be obtained from each boring within 12-18 inches of the final subgrade elevation.

4.3.2. Boring Profiles: Boring logs shall include the following:

a. Date, Strata Elevations, Depth of Boring.

b. Natural moisture content, Blow Count and Dry Density of each undisturbed sample.

c. Water table elevation.

4.3.3. Classification Testing: Each soil sample shall be tested according to AASHTO and/or the American Society for Testing Materials (ASTM) criteria to determine: Liquid Limit, Plastic Limit, Plasticity Index, and Percentage passing the U.S. Standard No. 200 sieve. Samples of sands and gravels shall require gradation analysis for classification determination.

These data shall be determined using the following methods:

a. Liquid Limit - AASHTO T 89 (ASTM D 4318)
b. Plastic Limit - AASHTO T 90 (ASTM D 4318)
c. Passing No. 200 - AASHTO T 11 (ASTM C 117)
d. Gradation - AASHTO T 27 (ASTM D 422)

The results of these tests shall be used to calculate the AASHTO Classification and Group Index using AASHTO M 145.

4.3.4. Soil Grouping: Soil samples collected in the field investigation can be combined to form soil groups. These groups shall be based upon the AASHTO Classification, Group Index and location within the area investigated. Groupings shall not consist of samples with different AASHTO Classifications (Note: There may be more than one group index within a given classification). Composite samples can be manufactured by combining representative, equal portions of each sample contained within the group and mixing to provide a uniform composite sample of the soil group. This shall be limited to group indices within the range of 7. Composite samples shall be subjected to Classification Testing as outlined in Section 4.3.3. Moisture-Density curves must be included for groups used in the design.

4.3.5. Subbase Support Testing: Individual subbase or composite samples shall be tested to determine the support value using either CBR (California Bearing Ratio) or Hveem Stabilometer (R-value) testing. These values shall be used in the design of pavement sections in accordance with the procedures outlined in Section 4.5. Tests shall be conducted in accordance with the following procedures:

4.3.5.1. CBR Tests: California Bearing Ratio tests shall be conducted in accordance with AASHTO T 193 with the following modifications:

a. Note 4 of AASHTO T 193 shall not apply. A 3- point CBR evaluation is required.
b. The compaction method used for the CBR test shall be determined by the soil classification.
c. Surcharge shall be calculated using a unit weight of 140 pcf for bituminous pavement and 135 pcf for untreated aggregate base course.
d. The design CBR value shall be determined from the CBR - Dry Density Curve and shall be the CBR value at 95 percent compaction.
e. In addition to the values requested in AASHTO T 193, Stress-Penetration curves for each sample, a CBR - Dry Density curve and Proctor Compaction test results shall be reported.

4.3.5.2. R-Value Tests: Hveem Stabilometer tests shall be conducted in accordance with AASHTO T 190. The design R-value shall be at 300 psi exudation pressure. The reported data shall consist of:

a. Dry density and moisture content for each sample.
b. Expansion pressure for each sample.
c. Exudation Pressure - corrected R-value curve showing the 300 psi design R-value.

4.4. Pavement Design Criteria

This section sets forth the parametric input data to be used for the design of pavements of various roadway classifications. If cohesive soil mitigation is required, the soil treatment shall extend from back of sidewalk to back of sidewalk.

4.4.1. Equivalent (18 Kip) Daily Load Applications (EDLA): The pavement design procedure in this chapter is intended to provide for a 20-year service life of pavement, given that normal maintenance is provided to keep roadway surface in an acceptable condition. EDLA and Design Traffic Number (DTN) are considered equivalent units based on 20-year design criteria and an 18 kip axle loading. All data and design nomographs in this chapter use EDLA units for pavement loading repetitions. Calculations shall be included, where applicable.

EDLA criteria for each Jefferson County roadway classification are given in Table 4.1.

Table 4.1 Recommended Equivalent (18 Kip) - Daily Load Applications (EDLA)

Classification	Class Modifier	EDLA Values
Local	Serving <50 D.U.	8
	Serving >50 D.U.	10
Collector	Residential	30
	Other	100
Major Collector/Minor Arterial	All	200
Principal Arterial	All	200

NOTE: Alternative EDLA values may be considered with justification provided by the Transportation Study, proposed land uses, and traffic analysis that defines proportion of truck vehicles, including construction truck traffic.

4.4.2. Design Serviceability: The following criteria shall be used for all Jefferson County roadways to be dedicated for public use:

Table 4.2 Serviceability Index

Roadway Classification	SI
Arterials	2.5
Collectors	2.5
Local	2.0

4.4.3. Minimum Pavement Layers: This paragraph provides the minimum acceptable pavement layers for public roadways in Jefferson County. These pavement layer thicknesses may be used for preliminary planning purposes. Final pavement designs must be based on actual subbase support test results. Table 4.3 lists these minimum thicknesses for each roadway classification.

Table 4.3 Minimum Pavement Sections

Road Classification	EDLA	Composite Section (inches)			Full Depth Asphalt (inches)
		Asphalt	Subbase		
			Base Course	Stabilized	
<50 D.U.	8	4	6	12	5
=>50 D.U.	10	4	6	12	5
Residential	30	4	6	12	5
Other	100	5	6	12	6
Major Collec-tor	200	5	6	12	7
Minor Arterial	200	5	6	12	7
Major Arterial	200	5	6	12	8

Regardless of the pavement layer design, all soils with an R-value less than 10, or PI greater than 15, shall be stabilized to a minimum of 12 inches below the bottom of the asphalt pavement layer, and shall be included in the depth of treatment.

Cohesive soil subbases shall be overexcavated and replaced with moisture conditioned fill. Minimum requirements for overexcavation are listed below in Table 4.3a.

Table 4.3a Minimum Overexcavation Requirement for Cohesive Soils

	Depth of Overburden/Fill Treatment	
Plasticity Index	Locals/Collectors	Major Collectors/Arterials
15-20	1 foot	2 feet
21-30	2 feet	3 feet
31-40	3 feet	4 feet

NOTES:

1. Road segments with isolated soil types may be designed separately for that individual segment.

2. Soil with (PI) over 40 shall be removed and wasted to a depth of five feet for any type of street.

3. In the Designated Dipping Bedrock Area, all bedrock shall be overexcavated to a depth of at least five (5) feet below the bottom of the proposed pavement layer. Where the bedrock is claystone, the top of the weathered claystone shall be considered as the top of bedrock. Should soil other than bedrock be found throughout the five (5) foot zone, it shall be overexcavated as shown in Table 4.3a.

4. The overexcavation areas shall be recompacted to 95% of maximum Standard Proctor Density (ASTM D-698) at 0 to +4% above optimum moisture content,. There shall be a minimum of 12 inches of soil stabilization below the bottom of the asphalt layer that is included in the total depth of overexcavation.

5. Overexcavation of overburden/fill below the stabilization section may be waived by Transportation and Engineering in areas where either previous overexcavation work during overlot grading has been validated or in cases where a thorough geotechnical investigation determines overexcavation is not warranted. Previous overexcavation work must be validated by compaction reports provided by the developer's geotechnical firm and in accordance with the Land Development Regulation (LDR).

4.4.4. Flexible Pavement Strength Coefficients: Table 4.4. contains standard design coefficients for various pavement materials. Non-standard design coefficients may be used only if approved in advance by Transportation and Engineering. In addition, design values must be verified by predesign mix test data and supported by daily construction tests; or, redesign values will be required.

Table 4.4 Strength Coefficients

Pavement Structure Component*	Strength Coefficients	(Limiting Test Criteria)
Conventional Materials		
Hot Mix Asphalt	0.40	1800 Lbs. Marshall Or R 90+)
Exist. Asphalt Pavement	0.30	(9-15 Yr)
	0.24	(>15 Yr)
Aggregate Base Course	0.12	(Cbr 80+ Or R 78+)
Exist. Aggregate Base Course	0.10	(Cbr 50+ Or R 69+)
Granular Subbase Course	0.07	(Cbr 15 Or R 50+)
Treated Materials		
Cement Treated Aggregate Base	0.23	(7 day, 650-1000 psi)
Lime Stabilized Subbase	0.14	(PI.<6, net swell <.5%, PH >12.3) Compressive Strength >/200 psi, per ASTM 5102-04, Procedure B
All Stabilized Subbase	0.14	Compressive Strength >/200 psi, per ASTM 5102-04, Procedure B

** The combination of one or more of the following courses placed on a subgrade to support the traffic load and distribute it to the roadbed.*

Structural Layers of a conventional flexible pavement design are defined below.

a) Surface Course: One or more layers of a pavement structure designed to accommodate the traffic load, the top layer of which resists

skidding, traffic abrasion, and the disintegrating effects of climate. The top layer is sometimes called "Wearing Course.".

b) Base Course: The layer or layers of specified or selected material of designed thickness placed on a subbase or a subgrade to support a surface course. The use of base course is not accepted in areas that base course does not adequately drain from roadway system.

c) Subbase: The layer or layers of specified or selected material of designed thickness placed on a subgrade to support a base course, surface course or both.

d) Subgrade: Prepared and compacted soil extending to such a depth as to affect the structural design.

4.5. Pavement Design Procedure

4.5.1. Flexible Pavements: The following procedure should be used in determining the Structural Number (SN) of the pavement being designed:

4.5.1.1. Using the appropriate roadway classification, determine the corresponding EDLA (Table 4.1).

4.5.1.2. Determine the Serviceability Index (SI) of the roadway classification (Table 4.2).

4.5.1.3. Select the proper nomograph:

Example: Figure 4.1 Flexible Pavements with SI = 2.0

Example: Figure 4.2 Flexible Pavements with SI = 2.5

NOTE: Original nomographs required are available from Transportation and Engineering.

4.5.1.4. Using subgrade CBR or R-Value test results and EDLA, determine the SN from the appropriate design nomograph.

4.5.1.5. Once the Structural Number (SN) has been determined, the design thicknesses of the pavement structure can be determined by the general equation:

SN = a1D1 + a2D2 + a3D3 + ...

where

a1 = Hot Mix Asphalt (HMA) strength coefficients

a2, a3, an = strength coefficients of additional pavement components

D1 = thickness of Hot Mix Asphalt (HMA) (inches)

D2, D3, Dn = thickness of additional pavement component sections

The strength coefficients for various components of the pavement structure are given in Table 4.4.

The component thickness selected must meet two conditions:

a. Total HMA thickness selected cannot be less than the minimum specified in Table 4.3. for the roadway classification.

b. The base course thickness selected cannot exceed 2.5 times the HMA thickness selected, with a maximum thickness of eight (8) inches.

4.5.1.6. The design must reference any mitigative measures required when the subbase and / or subgrade contains cohesive or expansive soils. Design reports recommending permeable layers such as untreated aggregate base course in the pavement system, must present the measures to be used to ensure adequate drainage of such layers, and to maintain segregation of the layers from the fine-grained soils. If cohesive or expansive soil mitigation is required, the soil stabilization shall extend from back of sidewalk to back of sidewalk. It is required that soils with R-values less than 10 or Plasticity Index greater than 15 be stabilized. Stabilization is for a minimum of the upper twelve (12) inches below the bottom asphalt pavement layer, and shall be included in the depth of treatment.

4.5.2 Rigid Pavements: This procedure has been deleted.

4.6. Material Specifications

The Specifications presented in this section are performance oriented. The County's objective in setting forth these Specifications is to achieve an acceptable quality of roadway structures. All sources for the mined or manufactured materials must be annually approved by Transportation and Engineering as having met the appropriate materials performance specifications. This approval is a condition of using those material sources for public improvement construction. For the purpose of these Standards, public improvements are all roadway improvements, sidewalks, curbs and gutters, appurtenant drainage basins or structures, storm sewer and their access ways, other public works within Jefferson County Right-of-Way, and required stormwater detention structures built on private property and maintained by the property owner(s).

4.6.1. Violations of Approval Conditions

4.6.1.1. Random Testing. Transportation and Engineering may order random tests of materials used in County public improvements to verify compliance with material specifications. These tests are in addition to the requirements of the roadway inspection and testing procedures.

4.6.1.2. Any and all material used to construct public improvements that is not from a certified source, or that is from a certified source and fails one or more random material test, may be subject to complete removal as a condition of County acceptance of that public improvement. Additional tests will be required to confirm the existence and extent of the sub-standard material prior to the initiation of remedial action. The extent of the material to be removed will be at the discretion of Transportation and Engineering.

4.6.2. Use of Materials Not Listed in Section 4.6. Materials in this section and provided with a set of specifications are those deemed to be the primary structural materials commonly or typically used in public improvements. Ancillary public improvement materials such as manufactured paints and coatings, bonding agents, sealers, fabrics or gaskets, insulating materials, etc., should be in compliance with CDOT material specifications for the appropriate material employed. Alternative materials for construction may be proposed for use. Decisions on acceptability of alternative materials will be made by Transportation and Engineering.

4.6.3. Material Specifications

4.6.3.1. Hot Mix Asphalt: This shall comply with material specifications for PG Binders and asphalt mixes in accordance with CDOT's most recent edition of Standard Specifications for Road and Bridge Construction, 702 and 703. This is hereby referred to as "CDOT Standard Specifications".

4.6.3.2. Aggregate Base Course Material. This material shall consist of hard, durable particles or fragments of stone or gravel, crushed to required sizes, containing an appropriate quantity of sand or other finely-divided mineral matter which conforms to the requirements of AASHTO M 147, and to Section 703.03, CDOT Standard Specifications.

Specifications. In addition, the material must have an R-value of 78 or greater, or a CBR of 80+, and must be moisture stabilized. Moisture stability is determined by R-value testing which shows a drop of 12 points or less in R-value between exudation pressures of 300 psi and 100 psi.

Only aggregate from sources approved by the Transportation and Engineering shall be used.

Table 4.5 Aggregate Base Course Materials

Sieve Size	Mass Percent Passing Square Mesh Sieves	
	Class 5	Class 6
2"	100	
1"	95 - 100	100
3/4"	—	95

#4	30 - 70	30 - 65**
#8	—	25 - 55
#200*	03 - 15	03 - 12**
Liquid Limit (LL)	30 Max.	30 Max.

*ASTM (C117)

**For gravel shoulders, No. 200 shall be 9-12 and No. 4 shall be 30-50.

Base course may be used only where the base can daylight in barrow ditches or where the subgrade consists of material classifying as GM, GW, GP, SM, SW, or SP using the Unified Soil Classification System.

4.6.3.3. Cement Treated Aggregate Base Course. This material shall consist of a mixture of aggregate materials, Portland cement and water as outlined in Section 304 of the CDOT Standard Specifications. Acceptable aggregates include CDOT Classes 5 and 6. Other aggregates may be used, if previously approved by Transportation and Engineering.

The materials to be used in construction shall be tested and a mix design submitted to the Transportation and Engineering. As a minimum, the mix design report shall contain a description of material sources, gradations and Atterberg limits of aggregates, cement type, Proctor compaction curves and unconfined compressive strength results for each mix, strength versus cement content curves, a design mix and special construction procedures recommended. Testing shall be in accordance with appropriate AASHTO specifications. Minimum in-place thickness for cement treated aggregate base course shall be twelve (12) inches.

To be approved, the mix shall have a seven-day compressive strength of at least 650 psi and no more than 1,000 psi. The minimum acceptable cement content shall be five percent by weight. Only mix designs approved by Transportation and Engineering shall be used. Approvals are required on a project basis, or an annual basis for suppliers, prior to issuing construction permits.

4.6.3.4. Lime Treated Subgrade: This Material consists of a mixture of native or imported soils, hydrated or quick lime and water as outlined by ASTM Specification C977, CDOT Standard Specification 307.

The materials to be used in construction shall be tested and a mix design submitted to Transportation and Engineering for approval. As a minimum, the mix design report shall contain a description of material sources, gradation and Atterberg limits of native soils, Atterberg limits, pH and five day, 100°F cure unconfined compressive test results for each mix, strength versus lime content curves, a design mix and special construction procedures recommended. Testing shall be in accordance with appropriate AASHTO methods.

To be approved, the mix shall meet the following requirements:

1. Minimum pH of 12.3 after completion of initial mixing.
2. Plasticity Index less than 6, per ASTM D4318.
3. Minimum hydrated lime of 5.0% dry weight, per ASTM D3.
4. Minimum unconfined compressive strength shall be 200 psi, per ASTM D1633.
5. Sulfate concentrations not to exceed .5%

Note: Field validation shall be required after soil blending occurs during construction.

Only mix designs approved by Transportation and Engineering shall be used. Approvals are required on a project basis prior to issuing construction permits. Minimum in-place thickness for this material shall be twelve (12) inches.

4.6.3.5. Lime/Fly-Ash Stabilized: This material consists of a mixture of native or imported soils, hydrated or quick lime, Class "C" Fly-Ash, and water as outlined by ASTM Specification C977, CDOT Section 307.

The materials to be used in construction shall be tested and a mix design submitted to the Transportation and Engineering for approval. As a minimum, the mix design report shall contain a description of material sources, gradation and Atterberg limits of native soils,

Atterberg limits, pH and five-day unconfined compressive test results for each mix, strength versus lime/fly-ash content curves, a design mix and special construction procedures recommended. Testing shall be in accordance with appropriate AASHTO methods.

To be approved, the mix shall meet the following requirements:

1. Plasticity Index less than 6, per ASTM D4318.
2. Minimum unconfined compressive strength shall be 200 psi, per ASTM D1633.
3. Sulfate concentrations not to exceed .5%.

NOTE: Field validation may be required after soil blending occurs during construction.

Only mix designs approved by Transportation and Engineering shall be used. Approvals are required on a project basis prior to issuing construction permits. Minimum in-place thickness for this material shall be twelve (12) inches.

4.6.3.6. Cement Stabilized Subgrade. This material consists of a mixture of native or imported soils, Portland cement and water.

The materials to be used on construction shall be tested and a mix design submitted to Transportation and Engineering for approval. As a minimum, the mix design report shall contain a description of material sources, gradation and Atterberg limits of native soils, Atterberg limits, pH and five-day unconfined compressive test results for each mix, strength versus cement content curves, a design mix and special construction procedures recommended. Testing shall be in accordance with appropriate AASHTO methods.

To be approved, the mix shall meet the following requirements:

1. Minimum Portland cement of 3.0% dry weight per ASTM D3.
2. Minimum unconfined compressive strength shall be 200 psi, per ASTM D1633.
3. Sulfate concentrations not to exceed 0.5%.

NOTE: Field validation may be required after soil blending occurs during construction.

Only mix designs approved by Transportation and Engineering shall be used. Approvals are required on a project basis prior to issuing construction permits. Minimum in-place thickness for this material shall be twelve (12) inches.

Chapter 5

Construction Specifications and Standards

5.1 Construction Specifications

The Permittee agrees to adhere to all construction specifications set forth in the latest edition of the Jefferson County Land Development Regulation, the Jefferson County Transportation Design and Construction Manual and the Colorado Department of Transportation (CDOT) Standard Specifications for Road and Bridge Construction manuals.

5.1.1. Permits: All work performed within County Rights-of-Way and/or easements shall require the issuance of a street/road construction permit. Permits shall be obtained at the Jefferson County Transportation and Engineering office, located at 100 Jefferson County Parkway, Suite 3500, Golden, Colorado.

5.1.1.1. Any permit issued shall pertain only to construction within the County-owned Right-of-Way and is in no way considered a permit to enter on any private property adjacent to such Right-of-Way nor to alter or disturb any facilities or installations existing within the Right-of-Way which may have been installed, and are owned, by others.

5.1.1.2. Permits, when issued, shall be valid for a period of ninety (90) calendar days, and may be renewed for one (1) additional ninety (90) calendar day period, providing the renewal is obtained (renewal may be obtained by telephone) prior to the permit expiration date.

Failure to obtain a renewal as stated herein will require obtaining a new permit and payment of applicable fees.

5.1.1.3. Any permit determined to be without an adequate bond as required in Section 5.1.2. below, shall be subject to immediate revocation by Transportation and Engineering.

5.1.2. Bonds: A non-cancellable permit bond shall be required for Right-of-Way Use and Construction Permits and License Agreements Section of the County Policies and Procedures for Streets and Roads.

5.1.3. General Specifications:

5.1.3.1. Any work done to a street/road or other County property under a permit shall result in the street/road or other property being returned to a condition equal to or better than original, within the limits of careful, diligent workmanship, good planning, and quality materials, with said work being accomplished in the least possible time and with the least disturbance to the normal functioning of the street/road or other property.

5.1.3.2. All backfill material, compaction, and resurfacing of any excavation made in the County property shall be done in accordance with specifications and standards approved by and on file with Transportation and Engineering.

5.1.4. Road Closures: Normally, only one side of a public street/road may be blocked at any given time. Should operating conditions require complete closure, advance approval of the closing of a public street/road must be obtained from Transportation and Engineering or advance approval of the closing of a private road must be obtained from Planning and Zoning. The permittee shall notify the appropriate fire protection district, the Jefferson County Sheriff's Department, and the Colorado State Patrol concerning exact location of barricades and dates traffic will be impeded. Barricades shall be maintained by the responsible contractor.

5.1.5. Utility Installations:

5.1.5.1. Underground: All utility lines, including Cable TV, shall be installed a minimum of two (2) feet below ground surface, or proposed roadway elevation, whichever is lower. This requirement is applicable throughout the Right-of-Way, including ditch lines and/or borrow pits. Exceptions may be granted by Transportation and Engineering where warranted and upon prior written request and approval.

5.1.5.2. Overhead: A minimum ground clearance of 18 feet 0 inches shall be provided where overhead utility lines cross public roads and streets. The clearance shall be measured at the lowest point where the line crosses the traveled portion of the road and/or street.

5.1.6. Base Course: All aggregate base course shall meet CDOT Class 6 Specifications, or an acceptable base course predicated on specific site conditions as approved by Transportation and Engineering. Native material is unacceptable as base course.

5.1.7. All concrete shall be in conformance with the appropriate class as specified in Section 601 of the CDOT Standard Specifications. A combination cure-sealer shall be used for concrete flatwork. Provide adequate texture by means of a moderately heavy broom finish to surfaces prior to applying the cure-sealer. The product shall be Dayton Superior Cure &Seal LV 25% J20 UV or approved equal. Apply two coats per manufacturer's instructions to all exposed surfaces, with the second coat applied at right angles to the first for complete coverage. The temperature range of application is 35 to 90 degrees F. Concrete shall not be left exposed for more than one hour between the time finishing is completed and commencement of curing treatment.

5.1.7.1. Concrete may be placed by machine methods provided that all finish lines are within 1/8" ± tolerance of the lines shown on the plans. The flowline must be free draining.

5.1.7.2. One-half (1/2) inch expansion joint material shall be installed when abutting any existing concrete or a fixed structure.

5.1.7.3. Median Cover Material and Median Edging Patterned Concrete: Median cover material and median edging patterned concrete shall be colored concrete that is Davis color #5084 "Harvest Gold" or approved equal. The release agent shall be Concrete Coatings Stamp-TEK ™ liquid release or approved equal. The stamp pattern shall be Matcrete "UK Cobblestone" or equivalent. A combination cure-sealer containing silane shall be used for concrete flatwork. The cure-seal product shall be SpecChem Cure Shield EX or approved equal. Control joints are saw cut every 10 feet. Expansion joint material with a zip-strip shall be installed between the patterned concrete and the back of curb. Control joints and expansion joints shall be sealed with Sikaflex-2C or approved equal. Refer to STND-18 and STND-19 for details. Granualr pre-emergent herbicide shall be placed in the areas that are to receive median cover.

Formatted: Indent: Left: 0"

5.1.7.4. Detectable Warnings on Concrete Curb Ramps: Detectable Warnings on concrete curb ramps shall be truncated domes of the dimensions shown on the plans. Domes shall be BRICK RED in color. Domes shall be prefabricated by the manufacturer as a pattern on embeddedable surface plates. Dome plates shall be set into wet concrete and shall not be glue or spray-on varieties. Detectable warning plates shall not be concrete pavers, masonry pavers, or cast-iron plates. Refer to STND-16 for details.

5.1.7.5. Waterproofing Membranes: Waterproofing membrane shall be placed on concrete bridge deck surfaces, and concrete box culverts per the waterproofing membrane detail. Surfaces to receive waterproofing membrane shall be thoroughly cleaned via sand-blasting or high pressure water. The waterproofing membrane shall be a hot pour asphaltic material, with 55 pound (#55) minimum asphaltic based roll material immediately placed on top. Refer to STND-17 for details.

5.1.8.1 Storm Sewer Pipe: Within County Right-of-Way and/or easements, all storm sewer pipe shall be minimum Class II Reinforced Concrete Pipe (RCP) in accordance with ASTM C-76, C-506 or C-507. Actual depth of cover, live load, and field conditions may require structurally stronger pipe.

5.1.8.2 All new or repaired storm sewer pipe and associated structures within County Right-of-Way and/or easements shall be constructed with trace wire and test locations. Installation shall be tested for operation and documented with Form Letter "T" in accordance with Jefferson County Land Development Regulation Section 33.

5.1.9. Culverts: Within County Right-of-Way and/or easements, all culverts shall conform to the Storm Drainage Design and Technical Criteria.

5.1.10. Traffic Control Devices

All traffic control devices shall conform to the MUTCD and be approved by Transportation and Engineering prior to installation. Conformance to the following minimum materials specifications or approved equal is required. Traffic signals shall conform to CDOT standards.

5.1.10.1. Signs, Sign Posts, and Anchors: Sign faces, posts and bases anchors shall conform be in conformance with the following materials specifications. All Nnonstandard signs faces, posts, and anchors bases must be approved by Transportation and Engineering. Nonstandard signs will not be maintained by the County. Post anchors for sign intallation after complete construction require approval by Transportation and Engineering.

5.1.10.1.1. Street Name Signs: Sign blanks shall be 6061 or 5052-H38 aluminum alloy 0.100 .080 inches thick. Polyethylene plates (Polyplate) is not allowed. (no polyplate allowed). Facing shall be green, electrocut HighHi-Intensity reflective sheeting with white HiHigh-Intensity Prismatic grade retroreflective sheeting letters and numerals. Refer to STND-12 for details.

5.1.10.1.2. Regulatory and Warning Signs: Sign blanks shall be 6061 or 5052-H38 aluminum alloy .10 0.100 inches thick. High-Intensity prismatic grade retroreflective sheeting shall be used for the background color, and letters and numerals for on all regulatory (i.e. stop, speed limit) and warning signs. Refer to STND-12 for details.

5.1.10.1.3. Sign Posts: All sign posts shall be two (2) inch by two (2) inch galvanized telespar tube with .120 inch wall thickness, and three eighths (3/8) inch holes drilled on one (1) inch centers, all sides over full length, ten (10) feet in length. U-posts are not allowed. All sign posts shall be two (2) inch by two (2) inch galvanized TELESPAR® telespar tube with 12 Gauge (0.105 .120 inch wall thickness), and three eighths (3/8) 7/16 inch pre-punched holes drilled on one (1) inch centers, all sides over full length, ten (10) feet in length. U-posts are not allowed.

5.1.10.1.4. Sign Post Bases: All sign post bases shall be twist resistant mounting for telespar type post consisting of a steel angle (1/4" x 2 1/2" x 2 1/2" x 24") with a formed and welded steel plate (1/8" x 10" x 15"), used with a compression fit V-lock wedge of 1/8 inch galvanized steel. The wedge must have a one-half (1/2) inch hole drilled in one side for removal. All sign post anchors shall be anchored securely in the soil or concrete to create a breakaway system. All sign post anchors shall be 2.25 inch x 2.25 inch perforated

square tubing, galvanized steel, TELESPAR ® (or equivalent), a minimum of 3 feet in length. Each tube section shall be 12 Gauge (0.105 inch wall thickness) with 7/16 inch diameter pre-punched holes on 1-inch centers, all sides over full length. The anchor tubing shall be twist resistant and allow mounting of a one-size smaller TELESPAR ® sign post. The anchor shall be driven into the soil no less than 30 inches. The sign post shall be inserted 8 inches inside the anchor tubing and double bolted in place prior to covering. Each bolt shall be a Hex Head with a Washer and matching Hex Nut. Bolts shall be secured at the exposed top of the anchor base and placed at opposite tube sides, 90 degrees apart. Signs to be placed in concrete medians or islands shall have the anchor driven inside of a 6-inch Schedule 40 PVC sleeve, with the sleeve measuring the thickness of the concrete plus 1-inch, and secured to the post in the same fashion as described in 5.1.10.1.3. The PVC sleeve shall be embedded in the surrounding concrete when the concrete is placed. Sign post anchors driven in soil not within conrete medians or islands shall be anchored in the same fashion without the PVC sleeve. Refer to STND-13 for details.

5.1.10.2. Pavement Marking: ~~Specified~~ ~~P~~pavement marking materials shall be used as specified for the service life, type, and ~~at~~ locations as identified below.

5.1.10.2.1. Temporary Application, Construction, or Detours: Waterborne paint (High Build) shall be used for short duration striping of lane lines, channelizing lines, edge (fog) lines, and centerlines. The same waterborne paint may be used for crosswalks and stop (bar) lines as deemed necessary. Stencil markings, such as symbols or arrows, shall not be placed for temporary use unless approved by the engineer.
~~3M Stamark 5730 preformed plastic marking material or an approved equivalent shall be used for crosswalks, stop bars, symbols (i.e. turn arrows) and striping for separation of turn and through lanes.~~

5.1.10.2.2. Permanent Application: Epoxy paint shall be used for striping of lane lines, channelizing lines, edge (fog) lines, and centerlines. Preformed Thermoplastic Pavement Markings shall be used for crosswalk and stop (bar) line markings, railroad (RR) crossings, words, symbols, and arrows. The thickness of all Preformed Thermoplastic Pavement Markings shall be 125 mils. Preformed Plastic Marking Tape (Type I), may be used in lieu of Preformed Thermoplastic Pavement Markings, if approved by Transportation and Engineering prior to installation. Preformed Plastic Marking Tape shall be 3M™ Stamark™ 5730 (White), 3M™ Stamark™ A270ES (White), or approved equivalent.~~Preformed plastic marking material or reflectorized paint shall be used for all other pavement marking. Use of thermoplastic pavement marking is not permitted.~~

5.1.10.3. Curb Ramps: All required curb ramps shall conform to current CDOT M&S Standard Plans and be approved by Transportation and Engineering.

5.1.10.4. Bike Racks: All required bike racks shall conform to Association of Pedestrian and Bicycle Professionals "Essentials of Bike Parking: Selecting and Installing Bike Parking that Works".

5.2 Construction Standards

All construction within County Right-of-Way and/or easements shall be in conformance with current CDOT M & S Standards and the following County construction standards.

Standard Number	Description
1	Curb and Gutter
2	Combination Curb, Gutter and Sidewalk
3	6" Vertical Curb, Gutter and Attached Sidewalk
4	6" Vertical Curb, Gutter and Detached Sidewalk
5	Typical Intersection Crosspan

6	Driveway Section for 6" Vertical Curb and Gutter
7	Optional Driveway Section for Combination Curb, Gutter and Sidewalk
8	Driveway Approaches for Roads
9	Typical Median Designs
10	Concrete Joint Details
11	Asphalt Street/Road Patchback
12	Road and Street Name Signs
13	Sign Posts and Bases
14	Typical Arterial Street Lighting
15	Street Name Sign and Bracket on Traffic Signal Pole
16	Detectable Warnings on Concrete Curb Ramps
17	Waterproofing Membranes
18	Median Cover Material Patterned Concrete
19	Median Edging Patterned Concrete
20 ~~16~~	Zone 1 Foothills / Mountain Area Preliminary Pavement Design
21 ~~17~~	Zone 2 Dipping Bedrock Area Preliminary Pavement Design
22 ~~18~~	Zone 3 Front Range Area Preliminary Pavement Design
23 ~~19~~	Design Zone Preliminary Pavement Sections

Definitions

AASHTO

American Association of State Highway and Transportation Officials, A Policy on Geometric Design of Highways and Streets, current edition.

ADT

Average Daily Traffic

Axle Load

The total load transmitted by all wheels on a single axle extending across the full width of the vehicle. Tandem axles 40 inches or less apart shall be considered as a single axle.

California Bearing Ratio

A measure of the ability of a soil or aggregate to resist the transmission of a vertical load in a lateral direction.

CDOT

Transportation Design and Construction Manual – Amended ~~12-17-19~~XX-XX-XX

Emulsified Asphalt Treated Base

A base consisting of a mixture of mineral aggregate and emulsified asphalt spread on a prepared surface to support a surface course.

Equivalent Single Axle Loads (ESAL)

A numerical factor that expresses the relationship of a given axle load to another axle load in terms of their effect on a serviceability of a pavement structure. All axle loads are equated in terms of the equivalent number of repetitions of an 18,000 pound single axle.

18k EDLA

18,000 pound single axle Equivalent Daily Load Applications (explained in "Axle Load" and "ESAL" above).

Flexible Pavement

A pavement structure which maintains contact with and distributes loads to the subgrade and depends upon aggregate interlock, particle friction, and cohesion for stability.

Flowline

The transition point between the gutter and the face of the curb. For a cross or valley pan, it is the center of the pan. Where no curb exists, the flowline will be considered the edge of the outside traveled lane.

Grade

Rate or percent of change in slope, either ascending or descending from or along the highway. It is measured along the centerline of the highway or access.

Lime Treated Subgrade

Subgrade consisting of a mixture of soil, hydrated lime and water, usually mixed in place and placed to support a pavement structure.

MUTCD

The Manual on Uniform Traffic Control Devices and the Colorado Supplement, current editions.

Mountains

See "Mountains" definition in the Zoning Resolution.

Passing Sight Distance

The visibility distance required to allow drivers to execute safe passing maneuvers in the opposing traffic lane of a two-lane, two-way highway.

Pavement Structure

The combination of subbase, base course and surface course placed on a subgrade to support the traffic load and distribute it to the roadbed.

a. Subbase: The layer or layers of specified or selected material of designed thickness placed on a subgrade to support a base course.

b. Base Course: The layer or layers of specified or selected material of designed thickness placed on a subbase or subgrade to support a surface course.

c. Surface Course: The uppermost component of a pavement structure designed to accommodate the traffic load, the top layer of which resists skidding, traffic abrasion, and the disintegrating effects of climate. The top layer is sometimes called "Wearing Course".

Plains

See "Plains" definition in the Zoning Resolution.

Plant Mixed Bituminous Base

A base consisting of mineral aggregate and bituminous material, mixed in a central plant, laid and compacted while hot, on a subbase or a subgrade, to support a surface course.

Plant Mixed Bituminous Pavement
A combination of mineral aggregate and bituminous material mixed in a central plant, laid and compacted while hot.

Regional Factor
A numerical factor expressed as a summation of the values assigned for precipitation, elevation, and drainage. This factor is used to adjust the structural number.

Roads
Public or private Rights-of-Way within the Mountain Area or as otherwise designated within this MANUAL.

Serviceability Index
A number indicative of the ability of the pavement to serve traffic at any particular time in its design life.

Signal Progression
Progressive movement of traffic at a planned rate of speed through adjacent signalized locations within a traffic control system without stopping.

Soil Support Value
A number which expresses the relative ability of a soil or aggregate mixture to support traffic loads through the pavement structure.

Speed Change Lane
A separate lane for the purpose of enabling a vehicle entering or leaving a roadway to increase (acceleration lane) or decrease (deceleration lane) its speed to a rate at which it can more safely merge or diverge with through traffic.

Stabilometer "R" Value
A numerical value expressing the ability of a soil or aggregate to resist the transmission of vertical load in a lateral or horizontal direction.

Stopping Sight Distance
The minimum sight distance necessary to enable a vehicle traveling at or near the design speed to stop before reaching a stationary object in its path.

Storage Lane
Additional lane footage added to a deceleration lane to store the maximum number of vehicles likely to accumulate during critical periods without interfering with the through lanes.

Streets
Public or private Rights-of-Way within the Plains Area or as otherwise designated within this MANUAL.

Strength Coefficient
A factor used for expressing the relative strength of each layer in a pavement structure.

Structural Number
A number derived from an analysis of roadbed and traffic conditions. A Weighted Structural Number is a Structural Number which has been adjusted for environmental conditions. A Weighted Structural Number may be converted to pavement structure thickness through the use of suitable factors related to the type of material being used in the pavement structure.

Traffic Analysis Period
A common analysis period (usually 20 years) used in geometric design.

Untreated Base Course

A layer or layers of base course without treatment of any kind.

Transportation Studies

Table of Contents

1. Requirements for Transportation Studies

2. Trip Generation Memoranda

3. Transportation Analyses

4. Transportation Impact Studies

~~2. Responsibility for Transportation Studies~~

~~3. Transportation Study Format~~

~~Introduction & Summary~~

~~Proposed Development~~

~~Existing Area Conditions~~

~~Projected Traffic~~

~~Transportation Analysis~~

~~Improvement Analysis~~

~~Findings & Recommendations~~

~~Appendix~~

~~Example Report Outline~~

~~Bibliography~~

Ignore I see this info on page 43.

Based on the latest version of ITE Trip gen?

1. Requirements for Transportation Studies (TS)

Can this be used on any type of road class? What about location to a signalized intersection. Does it need to look at requirements for turn lanes? Take a look at Broomfield Basic TIS in Broomfield Standard and Specs 162.02.03.

~~*General:* In considering the transportation aspects of land development, it is important to determine early in the process if and when a Transportation Study (TS) will be required. The trip generation from a proposed development is the main quantitative threshold; however, existing transportation issues such as a high crash location, complex intersection geometrics or other specific problems or deficiencies may also necessitate a TS. A TS shall be required in accordance with the Submittal Requirements Section of the Land Development Regulation.~~

The TS categories are as follows:

Trip Generation Memorandum: A Trip Generation Memorandum (TGM) is required when the land uses proposed with a development are expected to generate between 150 and 800 vehicle-trips per day. The TGM should show a computation of trips generated from the proposed use(s). The TGM for a proposed rezoning should also include a computational comparison of the maximum possible number of trips generated from the proposed uses and the maximum possible trips generated from existing and allowed uses. Include a table summarizing trip generation estimates.

Formatted: Font: Bold

Transportation Analysis: A Transportation Analysis (TA) may beis required by Planning and Zoningduring a Rezoning to determine the amount and/or distribution of traffic generated from a proposed development that is expected to generate 800 average daily vehicle-trips or more. The TA should show a computational comparison of the maximum possible trips generated from the proposed use(s) compared to the number of maximum possible trips generated from existing zoning. It should also include a percentage change in the average daily traffic (ADT) and peak hour traffic of adjacent roadways. A transportation analysis is a computation of the traffic that is generated from a proposed development that is expected to generate less than 1000 average daily trips. The analysis should conceptually address any potential onsite and offsite improvements that may be necessary to mitigate traffic impacts from the proposed development, including improvements that may already be required by County regulations. Required improvements may include the addition of turning lanes and bicycle/pedestrian facilities, including any other improvements which may be suggested by the analysis.

Minor Transportation Study: A Minor Transportation Study is required when a proposed development is expected to generate 1000 average daily trips per day or more, and the traffic impacts are localized as determined by Planning and Zoning. The study should address any onsite and offsite improvements that may be necessary to mitigate traffic impacts from the proposed development. Required improvements may include the addition of traffic signals, turning lanes, and bicycle/pedestrian facilities, including any other improvements which may be suggested by the study.

Major Transportation Study: A Major Transportation Study is required when a proposed development is expected to generate 1000 average daily trips or more, and the traffic impacts are regional as determined by Planning and Zoning. The study should address any onsite and offsite improvements that may be necessary to mitigate traffic impacts from the proposed development. Required improvements may include the widening or realigning of existing streets; the addition of new intersections or interchanges; the addition of traffic signals, turning lanes, and bicycle/pedestrian facilities, including any other improvements which may be suggested by the study.

Transportation Impact Study: A Transportation Impact Study (TIS) is required during a Site Development Plan (SDP) or Plat process when a proposed development is expected to generate 800 average daily vehicle-trips or more. While the trip generation from a proposed development is the main quantitative threshold, existing transportation issues such as a high crash location, complex intersection geometrics or other specific problems or deficiencies may also necessitate a TIS. The scope of the TIS should be agreed upon by the County and the applicant during the Preliminary Application process. The study should address any onsite and offsite improvements that may be necessary to mitigate traffic impacts from the proposed development. Required improvements may include the addition of traffic signals, turning lanes, and bicycle/pedestrian facilities, including any other improvements which may be suggested by the study.

Formatted: Font: Bold

Letter of Conformance with an Approved TIS: If a development in the Site Development Plan process is expected to generate more than 800 new vehicle trips, and there is an approved TIS on file from the last 3 years for the overall or regional development, a letter of conformance describing that the uses proposed in the development match those assumed in the overall TIS and a copy of that TIS are required.

Formatted: Font: Bold

2. Trip Generation Memoranda

A. Responsibility

General: The applicant is responsible for providing trip generation computation when proposing a development generating between 150 and 800 vehicle trips.

Review Process: The TGM for a proposed development will undergo an iterative review process in accordance with the Land Development Regulation. The applicant shall provide a letter identifying changes to the TGM with each re-submittal.

Certification: The TGM shall be prepared under the supervision of a qualified and experienced transportation professional who has specific training in traffic and transportation engineering or planning.

B. Format

The TGM data should be presented in tables, graphs, maps, and diagrams in lieu of a narrative, for clarity and ease of review.

Introduction and Summary

The purpose of the TGM should be clearly stated. This section should concisely summarize findings and conclusions.

Proposed Development

Provide a description of the project site including size, location, current land use, intensity, existing zoning, proposed zoning, and access roadways.

Existing Conditions

Current traffic volume counts should be collected to determine existing traffic conditions in the study area. If the most recent traffic counts available are 3 years old or older, new traffic counts shall be collected.

Trip Generation Comparison Table

Provide a trip generation comparison table showing the traffic generated from existing land use(s) compared to the maximum potential trip generation for land uses associated with the proposed development. The latest edition of ITE's Trip Generation Handbook provides guidance on how to select between rates and equations when both are available. The national published data provided by ITE should be used as starting points in estimating the amount of traffic by a specific building type or land use. If no trip generation rates nor equations are available from ITE's Trip Generation Handbook, traffic counts from similar site(s) should be provided as a basis for trip generation estimates. If no site(s) with similar uses are available, an analysis of the proposed use based on the site's capacity may be considered.

Findings

Provide a summary of findings, including the percentage increase in average daily traffic (ADT) on adjacent roadways from existing conditions to proposed.

C. Example Outline

Trip Generation Memo

[Development Title]

Case Number: XX-XXXXXX XX

Applicant Information

[Name]

[Address]

[Phone Number]

[Email]

Report Author

[Name]

[Address]

[Phone Number]

[Email]

Formatted: Font: Bold

Formatted: Font: Bold

Formatted: Font: Bold

Formatted: Font: Bold

Formatted: Font: Bold

Formatted: Font: Bold

Date of Original Report: XX-XX-XXXX

Date of Revision: XX-XX-XXXX

Purpose of Analysis

Formatted: Font: Bold

Introduction

The purpose of this Trip Generation Memo is to evaluate the potential impacts of the proposed development to the surrounding transportation network.

Project Overview

Formatted: Font: Bold

[[Description of the project site including size, location, current land use, intensity, existing zoning, proposed zoning, access roadways, and proposed development phasing. Site plan should not be included in this analysis.]]

Existing Roadway System

Road classification and speed??

Formatted: Font: Bold

[Include a description of the study area roadways and intersections including current traffic

Projected Transportation Impact

Formatted: Font: Bold

Trip Generation

[Description of publication or methodology used to generate daily and peak hour traffic volumes for the proposed development; trip reduction and internal trip capture rates and pass-by trips not applicable]

Trip Generation Summary Table											
Land Use Type /Zoning (Type)	**Land Use Type**	**ITE Code**	**Unit**	**Size**	**Vehicles per day**	**AM Peak**			**PM Peak**		
						In	Out	Total	In	Out	Total
Existing Land Use											
Total											
Existing Maximum* Zoning											
Total											
Proposed Maximum* Zoning											
Total											
Comparison Table											
Zoning Additional Trips (Proposed Zoning Total minus Existing Zoning Total)											

*Maximum potential trip generation based on the existing and proposed zoning

Findings

Formatted: Font: Bold

[Summarize existing land use/proposed intended land use and existing/proposed zoning trip generation and potential impacts to the transportation network]

Existing Land Use/Proposed Intended Land Use

Existing Zoning/Proposed Zoning

Appendix

[Insert any data used in analysis:]

Trip Generation Calculations

Traffic Counts

2. Responsibility for Transportation Studies

General: The impacts from a proposed development as assessed in the TS are the primary responsibility of the applicant and their engineer.

Review Process: The TS for a proposed development will undergo an iterative review process in accordance with the Land Development Regulation. The applicant shall provide a letter identifying changes to the Transportation Study, if applicable.

Certification: The TS shall be prepared under the supervision of a qualified and experienced transportation professional who has specific training in traffic and transportation engineering and planning. All transportation operations and design work shall be completed under the supervision of an experienced professional in conformance with the State of Colorado requirements. The TS shall be signed and sealed by a registered professional engineer in the State of Colorado.

3. Transportation ~~Study Format~~Analyses

A. Responsibility

General: The applicant is responsible to demonstrate how transportation systems can accommodate the traffic generated by a proposed development or how the system can be improved to accommodate the traffic generated by the development.

Review Process: The TA for a proposed rezone will undergo an iterative review process in accordance with the Zoning Resolution. The applicant shall provide a letter identifying changes to the TA with each re-submittal.

Certification: The TA shall be prepared under the supervision of a qualified and experienced transportation professional who has specific training in traffic and transportation engineering or planning.

B. Format

Throughout the TA, data should be presented in tables, graphs, maps, and diagrams in lieu of a narrative, for clarity and ease of review.

Introduction and Summary

The purpose of the ~~TS~~ TA should be clearly stated. This section should contain an Executive Summary that concisely summarizes the principal findings, ~~conclusions~~conclusions, and recommendations of the ~~TS~~TA.

Proposed Development

Provide a description of the land, parcel size~~, general terrain features~~ and location within the county. Include a vicinity map showing the location of the project site in relation to the surrounding transportation network. The offsite as well as site specific development should be described. This includes a discussion of location, proposed zoning, land use and intensity. A site plan is not necessary within a TA.~~, location, site plan and zoning. As required, primary and secondary access to existing streets should be proposed. Construction phasing should be introduced and addressed in this section.~~

Formatted: Font: Bold

Formatted: Font: Bold

Formatted: H2study

Formatted: Normal

Formatted: Normal

How did you determine?
Broomfield was using 2yr.

Existing Area Conditions

Limits of the study area should be described in this section. The limits shall be mutually agreed to between the applicant and the County. Roadways that provide access to the site ~~as well as future roadways included in the study area~~ are included in this section. ~~Existing intersections within the study area as well as geometrics and traffic signals should be identified. The existing and proposed uses of the site should be identified in terms of various zoning categories of the County. The land use generating the most trips should be used for the analysis.~~ Current traffic volume counts should be collected to determine existing traffic conditions in the study area. If the most recent traffic counts available are 3 years old or older, new traffic counts shall be collected. These counts ~~may~~ should include ~~those for street~~ average daily traffic ~~and for intersection peak hour turning movements~~within the study area.

Projected Traffic

The main component of the TA~~One of the most critical elements of the TS~~ is estimating the amount of traffic being generated from a proposed development. A trip generation comparison table showing computational comparison of the maximum possible trips generated from the proposed uses and the maximum possible trips generated from existing and allowed uses shall be provided. The latest addition of ITE's *Trip Generation Handbook* provides guidance on how to select between rates and equations when both are available. The national published data provided by ITE should be used as starting points in estimating the amount of traffic by a specific building type or land use. If no trip generation rates nor equations are available from ITE's Trip Generation Manual, traffic counts from similar site(s) should be provided as a basis for trip generation estimates. If no site(s) with similar uses are available, an analysis of the proposed use based on the site's capacity may be considered. Include a table summarizing trip generation estimates. Calculate the percentage increase in average daily traffic with the proposed development over the existing traffic.

~~*Computer Software:* A number of computer software packages are available that are designed to either produce trip generation data or accept trip generation data for further analysis.~~

~~*Trip Distribution:* The direction from which traffic will access the site can vary depending on many factors such as the type of proposed development and the area which it will attract traffic, surrounding land uses and population and conditions of the surrounding street system. Document the methods and assumptions made in this section.~~

~~*Trip Assignment:* The final product of this process is total project generated trips, by direction and turning movement, on each segment of the TIS area roadway network. The assignment should reflect the horizon years and consider future conditions of the roadway. Typically, the County uses a 3 year projected and 20 year projected traffic volume. Additional horizon years may be necessary depending on proposed phasing.~~

~~*Internal Trips:* Trips captured internally by a proposed development may be applicable depending on the use. The internal capture rates used should be based on the current version of the ITE's *Trip Generation Handbook*.~~

~~***Pass-by trips:* Trip generation analysis yields the number of vehicle trips that a site is expected to generate at its driveways. A percentage of their trips are simply diverted from trips already passing by on the adjacent roadway system. Pass by trips diverted from a roadway should be rechecked if they represent more than 15% of the traffic volume on that roadway.~~ Findings and Recommendations

Summarize the proposed development, its impacts, and the possible mitigation strategies.

C. Example Outline

Rezoning Transportation Analysis

[Development Title]

Case Number: XX-XXXXXX RZ

Applicant Information

[Name]

[Address]

[Phone Number]

[Email]

Report Author

[Name]

[Address]

[Phone Number]

[Email]

Date of Original Report: XX-XX-XXXX

Date of Revision: XX-XX-XXXX

[Cert Number/Seal and Signature of Certified Transportation Professional (PE, AICP-CTP, ITE-PTP] (If applicable)

Purpose of Analysis

Formatted: Font: Bold

Introduction

The purpose of this Transportation Analysis is to evaluate the potential impacts of the proposed zoning to the surrounding transportation network. If the proposed zoning is approved, the Applicant will be required to submit a Transportation Impact Study to determine specific mitigation measures and must satisfy County Land Development Regulations (LDR) and Transportation Design and Construction Manual Roadway Templates at the time of Site Development Plan (SDP) and/or Preliminary and Final Plat (PF).

Project Overview

Formatted: Font: Bold

[Description of the project site including size, location, current land use, intensity, existing zoning, and proposed zoning. Site plan should not be included in this analysis.]

Study Area

Formatted: Font: Bold

[Description of the study area and impacted roadways and intersections. The study area limits should be described and mutually agreed to between the applicant and the county. The study area should not include roadways proposed interior to the development.]

Existing Roadway System

Formatted: Font: Bold

[Include a description of the study area roadways and intersections including existing traffic counts, lane geometry, posted speed limits, current traffic control at intersections, presence of pedestrian and bicycle infrastructure, availability of on-street parking, and whether a roadway is private or public.]

Projected Transportation Impact

Formatted: Font: Bold

Trip Generation

[Description of publication or methodology used to generate daily and peak hour traffic volumes for the proposed development; trip reduction and internal trip capture rates and pass-by trips not applicable during rezoning]

Trip Generation Summary Table

Trip Generation Summary Table											
Land Use Type /Zoning (Type)	**Land Use Type**	**ITE Code**	**Unit**	**Size**	**Vehicles per day**	**AM Peak**			**PM Peak**		
						In	Out	Total	In	Out	Total
Existing Land Use											
Total											
Existing Maximum* Zoning											
Total											
Proposed Maximum* Zoning											
Total											
Comparison Table											
Zoning Additional Trips (Proposed Zoning Total minus Existing Zoning Total)											

*Maximum potential trip generation based on the existing and proposed zoning

Analysis

[Summarize existing land use/proposed intended land use and existing/proposed zoning trip generation and potential impacts to the transportation network. Provide the percentage increase in average daily traffic (ADT) on adjacent roadways from existing conditions to proposed. Level of Service (LOS) calculations are not required with a TA.]

Existing Land Use/Proposed Intended Land Use

Existing Zoning/Proposed Zoning

Recommendations

[Summarize the anticipated public improvements and strategies and/or recommendations to mitigate potential negative impacts to the transportation network in the study area]

Table 2: Anticipated Public Improvements

Summary of the anticipated public improvements per County Land Development Regulations (LDR) and Transportation Design and Construction Manual Roadway Templates (shoulders, sidewalks, curb and gutter, bicycle infrastructure, etc.) if the zoning is approved and the applicant proceeds to subsequent development processes.

Location	Improvements

Table 3: Potential Mitigation Strategies

Formatted: Font: Bold

Formatted: Font: Bold

Formatted: Font: Bold

Formatted: Font: Bold

Formatted: Font: Bold

Summary of potential strategies and/or recommendations that show an ability to mitigate traffic impacts from the proposed rezoning to the study area.

[List strategies that can address potential impacts of increased trip generation from the proposed zoning. Impacts should be those that are common for the location type and the level of trip generation increase. Recommendations should generally indicate if strategy is feasible at the location indicated.]

Location	Strategy	Recommendation

G. Appendices should include the following:
1. Site plan.
2. Aerial showing the location of proposed access and adjacent accesses (include measurements between access).
3. Directional and access distribution diagram.
4. Peak hour turning movement diagram.
5. If Auxiliary lanes are required include a sketch of improvements (length of taper, decel, storage).

Broomfield requires this info in the appendix for our basic study. The aerial for drive spacing and the direction distribution have been very helpful.

Appendix

Formatted: Font: Bold

[Insert any data used in analysis]

Trip Generation Calculations

Formatted: Font: Bold

Traffic Counts

4. Transportation Impact Studies

A. Responsibility

Formatted: Font: Bold

General: The applicant and their engineer are responsible for mitigating the impacts from a proposed development as assessed in the TIS.

Review Process: The TIS for a proposed development will undergo an iterative review process in accordance with the Land Development Regulation. The applicant shall provide a letter identifying changes to the Transportation Study with each re-submittal of the TIS.

Certification: The TIS shall be prepared under the supervision of a qualified and experienced transportation professional who has specific training in traffic and transportation engineering and planning. All transportation operations and design work shall be completed under the supervision of an experienced professional in conformance with the State of Colorado requirements. The TIS shall be signed and sealed by a registered Professional Engineer in the State of Colorado.

B. Format

Formatted: Font: Bold

Throughout the TIS, data should be presented in tables, graphs, maps, and diagrams in lieu of a narrative, for clarity and ease of review.

Introduction and Summary

Formatted: Font: Bold

The purpose of the TIS should be clearly stated. This section should contain an Executive Summary that concisely summarizes the principal findings, conclusions, and recommendations of the TIS.

Proposed Development

Formatted: Font: Bold

Provide a description of the land parcel size, general terrain features and location within the county. Include a vicinity map showing the location of the project site in relation to the surrounding transportation network. The offsite as well as site-specific development should be described. This includes a discussion of land use and intensity, location, site plan and zoning. As required, primary and secondary access to existing streets should be proposed. Construction phasing should be introduced and addressed in this section.

Existing Area Conditions

Formatted: Font: Bold

Limits of the study area should be described in this section. The limits shall be mutually agreed to between the applicant and the County,

during the Preliminary Application process. Roadways that provide access to the site as well as future roadways included in the study area are included in this section. Existing intersections within the study area as well as geometrics and traffic signals should be identified. The existing and proposed uses of the site should be identified. Current traffic volume counts should be collected to determine existing traffic conditions in the study area. If the most recent traffic counts available are 3 years old or older, new traffic counts shall be collected. These counts should include average daily traffic and intersection peak hour turning movements within the study area.

Background Traffic

Formatted: Font: Bold

Background traffic growth estimates should be based on the most recent regional Travel Demand Model available. Overly conservative projections of background growth will not be accepted. If a growth model is not available for the study area, a reasonable growth rate considering area development potential shall be agreed upon by the applicant and the County during the Preliminary Application process. Growth rates above 2% per year will not be considered.

Trips generated by other approved developments within the study area, that were not included in the traffic counts collected, may be added to the background growth and referenced in the TIS. However, the combined background growth rate from area development and growth modelling shall not exceed an average of 2% per year.

Projected Traffic

Formatted: Font: Bold

One of the most critical elements of the TIS is estimating the amount of traffic being generated. The latest edition of ITE's Trip Generation Handbook provides guidance on how to select between rates and equations when both are available. The national published data provided by ITE should be used as starting points in estimating the amount of traffic by a specific building type or land use. If no trip generation rates nor equations are available from ITE's Trip Generation Manual, traffic counts from similar site(s) should be provided as a basis for trip generation estimates. If no site(s) with similar uses are available, an analysis of the proposed use based on the site's capacity may be considered. Include a table summarizing trip generation estimates.

Trip Distribution: The direction from which traffic will access the site can vary depending on many factors such as the type of proposed development and the area which it will attract traffic, surrounding land uses and population and conditions of the surrounding street system. Document the methods and assumptions made in this section.

Trip Assignment: The final product of this process is total project generated trips, by direction and turning movement, on each segment of the TIS area roadway network. The assignment should reflect the horizon years and consider future conditions of the roadway. Typically, the County uses a 3-year projected and 20-year projected traffic volume. Additional horizon years may be necessary depending on proposed phasing.

Internal Trips: Trips captured internally by a proposed development may be applicable depending on the use. The

internal capture rates used should be based on the current version of the ITE's Trip Generation Handbook.

Pass-by trips: Trip generation analysis yields the number of vehicle trips that a site is expected to generate at its driveways. A percentage of their trips are simply diverted from trips already passing by on the adjacent roadway system. Pass by trips diverted from a roadway should be rechecked if they represent more than 15% of the traffic volume on that roadway. Pass-by trips shall still be applied to the site's driveways and any local roadways between the site and the roadway from which the trips are diverted. Pass-by trip reductions should not be made to the overall trip generation prior to trip assignment.

Transportation Analysis

Formatted: Font: Bold

Capacity analysis is required for each of the major street and site access locations (signalized and un-signalized) within the ~~TS~~ study area. A clearer understanding of both the transportation related implications of the project and the necessary improvements to ensure acceptable operating conditions should result from this section of the TS. In addition, the following County ~~Plans~~ plans and ~~Program~~ program and ~~Factors~~ factors shall be considered in the transportation analysis: ~~County Plans and Program,~~ Major Thoroughfare Plan, Bicycle ~~and Pedestrian~~ Plan and Traffic Impact Fee Program.

Factors:

- Safety
- Neighborhood Impacts
- School Zone Traffic Control
- Traffic Control Needs
- Transit Needs or Impacts
- Transportation Demand Management
- Circulation Patterns
- On-site Parking Adequacy and Off-site Parking Facilities
- Pedestrian and Bicycle Movements/Continuity of Facilities
- Service and Delivery Vehicle Access
- Emergency and Fire Apparatus Access

Transportation Safety: The initial review of existing conditions within the TIS area ~~should~~ shall include analysis of crash data from the 3 most recent years available. Any intersection experiencing Level of Service of Safety (LOSS) III or IV, or above average crashes on the state-specific Safety Performance Functions, ~~a crash rate of over 1 per million entering vehicles~~ will need additional analysis. The proposed site plan should ensure that the internal circulation system and external access points improve pedestrian and bicyclist~~s~~ safety and minimize vehicle/pedestrian and vehicle/bicyclist~~s~~ conflict points.

Transportation Operations: Impacts on transportation operations shall be measured based on the definitions contained in the current version of the *Highway Capacity Manual (Transportation Research Board)*. For each analysis period studied (typically 3 and 20 year periods) and for each phase of the project a projected total traffic volume must be estimated for each critical intersection and roadway segment being analyzed. The projected total traffic volumes (consisting of the summation of existing traffic, background growth traffic, background development traffic and site traffic) will be used in the next step-capacity analysis of future conditions.

Signalized Intersections: Level of Service (LOS) is based on roadway system characteristics that include:

- traffic volume
- lane geometry
- percentage of trucks
- peak hour factor
- number of lanes
- signal progression
- ratio of green time to cycle time (G/C)
- roadway grades
- parking conditions
- bicycle and pedestrian flows

The LOS categories are established in the *Highway Capacity Manual*. In general, LOS ratings of A to D are acceptable while E & F ratings must be mitigated. There are a number of software programs that can determine highway capacity.

Unsignalized Intersections: LOS for multi-way stop controlled intersections and driveway intersections must be determined by computing or measuring control delay. Where capacity analysis shows a LOS of D or worse, an analysis should be completed to determine if a signal, roundabout, or turn restriction might be needed. Any proposed all-way stop intersection must be justified using MUTCD's guidance on multi-way stop applications. Any newly signalized intersections must be justified using MUTCD Warrant 2 (Four-Hour Vehicular

Volume). Alternatively, Warrant 3 (Peak Hour Volume) may be evaluated only if the unusual cases as defined in the MUTCD apply.

Roundabouts: In cases where LOS analysis indicates that an unsignalized intersection is expected to be LOS D or worse, a roundabout will be assessed before consideration will be given to a proposed signalized or multiway stop intersection. Factors for consideration of a roundabout include:

- availability of right-of-way
- crash history or potential
- traffic volume
- lane geometry
- number of lanes
- roadway grades
- parking conditions
- bicycle and pedestrian flows
- level of service

Each proposed location for a roundabout will be evaluated on a case by case basis. The capacity of a roundabout must be evaluated, and appropriate analytical software programs shall be utilized.

Parking: Utilizing ITE's Parking Generation Manual as a starting point, provide an estimate of how much parking the proposed development will generate. Parking utilization rates from similar sites may aid in this analysis.

Queueing: Provide an analysis of projected 95th percentile queues to determine adequacy of existing and proposed turn lane storage lengths, and whether any through-queues block adjacent intersections.

Improvement Analysis

The improvements required to accommodate existing, background and site generated traffic are summarized in this section. Intersections serving the development should be analyzed first. The analysis should include the following steps:

- Identification of critical movements and corresponding intersection approaches.
- Determine if the intersection needs new types of traffic control such as roundabout, signalization or multi-way stop control. ~~The Transportation Study indicates that an intersection internal, adjacent or within 500 feet of the development will satisfy the MUTCD Peak Hour Warrant or Four-Hour Warrant within 20 years.~~
- Evaluation of each critical movement under potential scenarios of adding lanes, altering signal phasing, signal timing or lane use.
- Evaluation of signal locations, phasing and timing, with particular emphasis on corridor signal progression.
- Evaluation of queue lengths for both turn and through lanes to ensure adequate storage space.
- Identification of potential improvements within the contexts of Right-of-Way availability, intersection spacing, signal progression, County design standards and practical feasibility.

Findings & Recommendations

Summarize the proposed development, its impacts, and the proposed mitigation measures. ~~Throughout the TS, data should be presented in tables, graphs, maps and diagrams in lieu of a narrative, for clarity and ease of review. The examples contained in ITE's current version of Publication No. RP-020C *Transportation Impact Analysis of Site Development* is an excellent source of information.~~

C. Example Transportation Impact Study Outline

Transportation Study

Formatted: Font: Bold

[Development Title]

Case Number: XX-XXXXXX SD/PF

Applicant Information

[Name]

[Address]

[Phone Number]

[Email]

Report Author

[Name]

[Address]

[Phone Number]

[Email]

Date of Original Report: XX-XX-XXXX

Date of Revision: XX-XX-XXXX

[Seal and Signature of Colorado Professional Engineer]

Page Break

Executive Summary

Formatted: Font: Bold

Table of Contents

Formatted: Font: Bold

List of Figures

List of Tables

Purpose of Analysis

Formatted: Font: Bold

Proposed Development

Formatted: Font: Bold

Project Location

[Insert vicinity map showing the location of the project site in relation to the surrounding transportation network]

Project Overview

[Description of the site including size, location, land use, intensity, existing zoning, proposed zoning, access locations and proposed development phasing.]

Existing Area Conditions

[Include diagrams and narrative of traffic counts collected]

Formatted: Font: Bold

Background Traffic

[Include reference to source Travel Demand Model, any nearby developments considered, and diagrams of 3-year and 20-year projections]

Formatted: Font: Bold

Projected Traffic

Formatted: Font: Bold

Trip Generation

[Description of publication or methodology used to generate daily and peak hour traffic volumes for the proposed development including any trip reduction considerations, internal trip capture rates and pass-by trips as applicable]

Trip Generation Summary

[Table including land use, intensity, ITE Code, daily traffic volume, peak hour: in, out and total traffic volumes.]

Trip Distribution

Pass-by Trips (if applicable)

Trip Assignment

3-Year Horizon

20-Year Horizon

Transportation Analysis

Formatted: Font: Bold

Level of Service

[LOS diagrams at all study area intersections]

Safety

[LOSS Analysis]

Intersection Controls

[Roundabout analysis, signal- or all-way-stop-warrant analysis]

Parking

[Include parking generation and availability]

Queueing

[Queueing analysis at study area intersections]

Improvement Analysis

Formatted: Font: Bold

[Describe any improvements needed to mitigate impacts]

Conclusion and Recommendations

Formatted: Font: Bold

[Summarize the proposed development including site location, proposed accesses, and trip generation.]

Appendices

Formatted: Font: Bold

Site Plan

Traffic Counts

Growth Calculations

Nearby Development Trip Estimates*

Trip Generation Sheets

LOS Worksheets (Synchro or equivalent)

Roundabout Analysis*

Signal and/or All-Way Stop Warrants*

LOSS Worksheets

Parking Generation Sheets

Queueing Analysis Worksheets

Signal Progression Analysis*

*as applicable

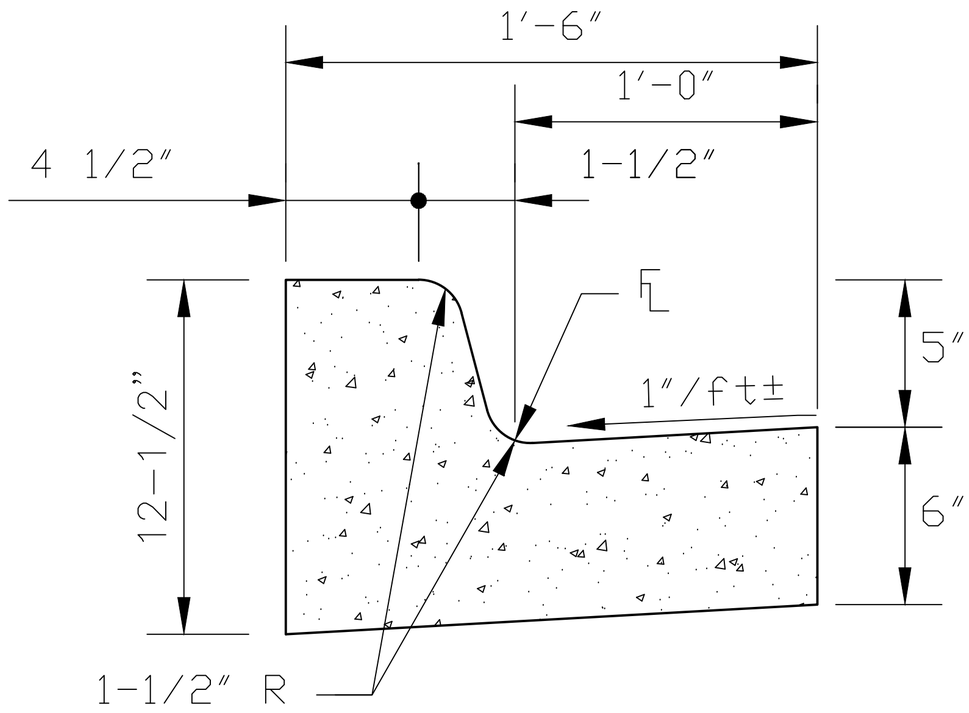

* 6" VERTICAL CURB WITH 1' GUTTER IS REQUIRED FOR ALL RAISED MEDIANS.

6" VERTICAL CURB WITH 1' GUTTER

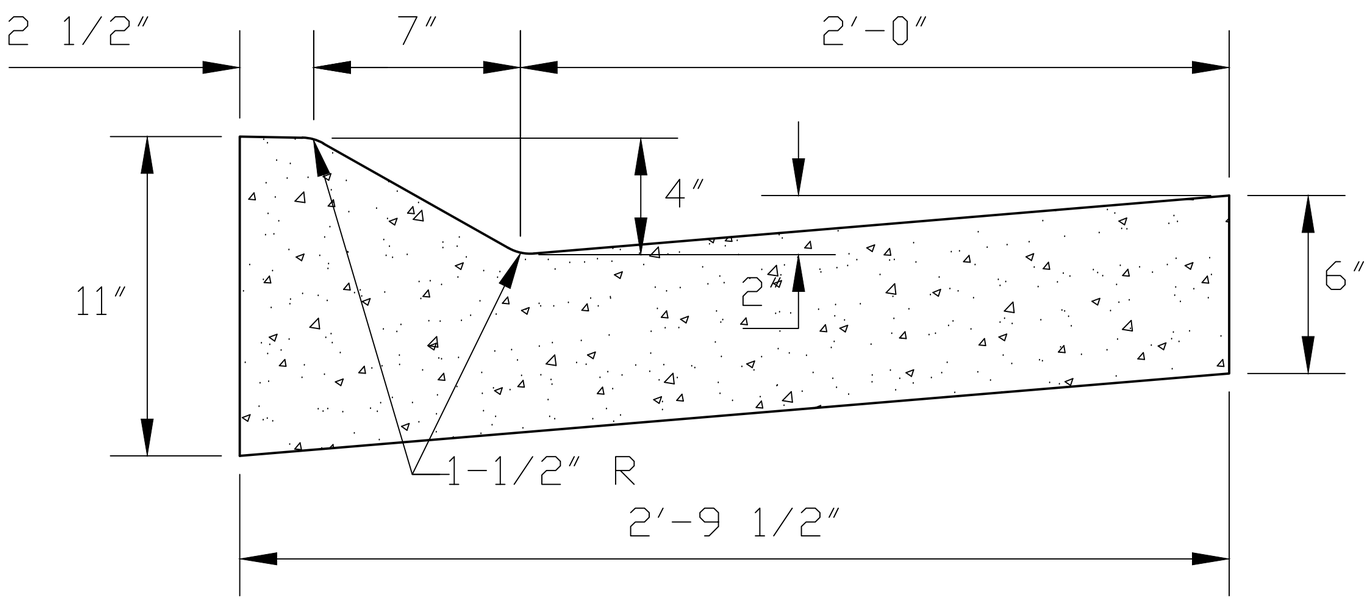

* SEE STANDARD NO. 10 FOR CONCRETE JOINT DETAILS

* ANY CURB TRANSITION FROM COMBINATION CURB, GUTTER AND SIDEWALK TO 6" VERTICAL CURB AND GUTTER SHALL TAKE PLACE IN A MINIMUM OF 12 FEET.

* COMBINATION CURB, GUTTER, AND SIDEWALK IS REQUIRED FOR LOCAL STREETS.

MOUNTABLE CURB & GUTTER

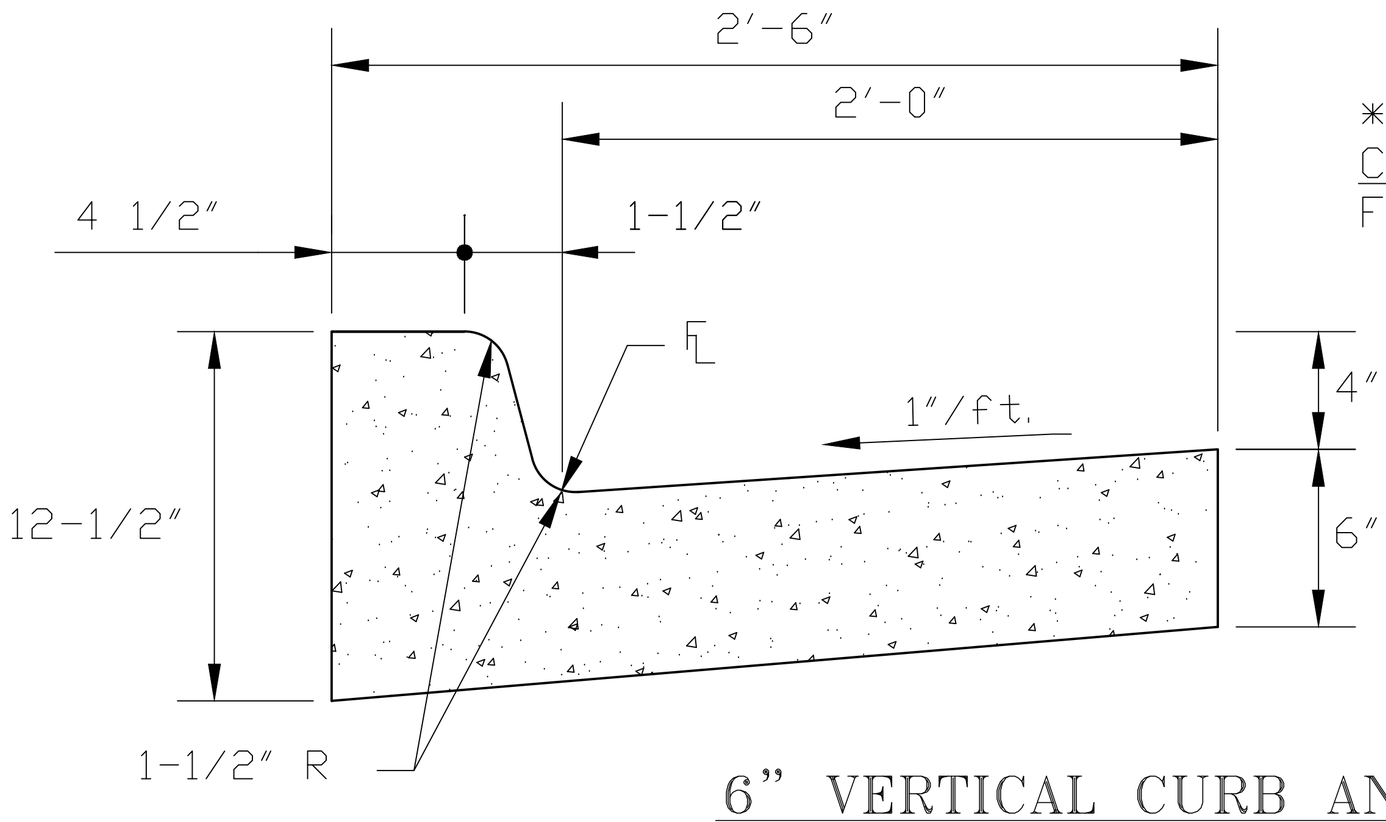

* SEE STANDARD NO. 10 FOR CONCRETE JOINT DETAILS FOR ALL CURB AND GUTTER.

6" VERTICAL CURB AND GUTTER

DATE: 01/04/2016	JEFFERSON COUNTY DIVISION. of TRANSPORTATION & ENGINEERING 100 JEFFERSON CNTY. PKWY., SUITE 3500 GOLDEN, CO. 80419 (303) 271-8419
DRAWN BY: D.A.M.	
CHECKED BY: STAFF	
SCALE:	CURB & GUTTER
FILE: STND-1	

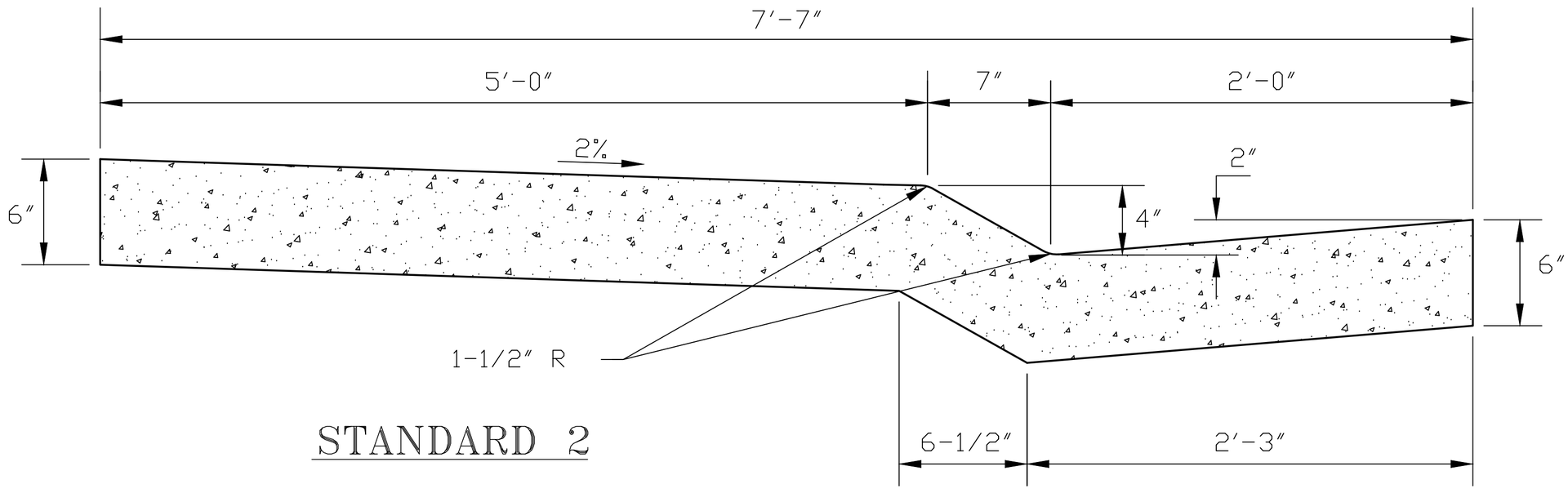

STANDARD 2

* SEE STANDARD NO. 10 FOR CONCRETE JOINT DETAILS
* ANY CURB TRANSITION FROM COMBINATION CURB, GUTTER AND SIDEWALK TO 6″ VERTICAL CURB AND GUTTER SHALL TAKE PLACE IN A MINIMUM OF 12 FEET.

COMBINATION CURB, GUTTER AND SIDEWALK

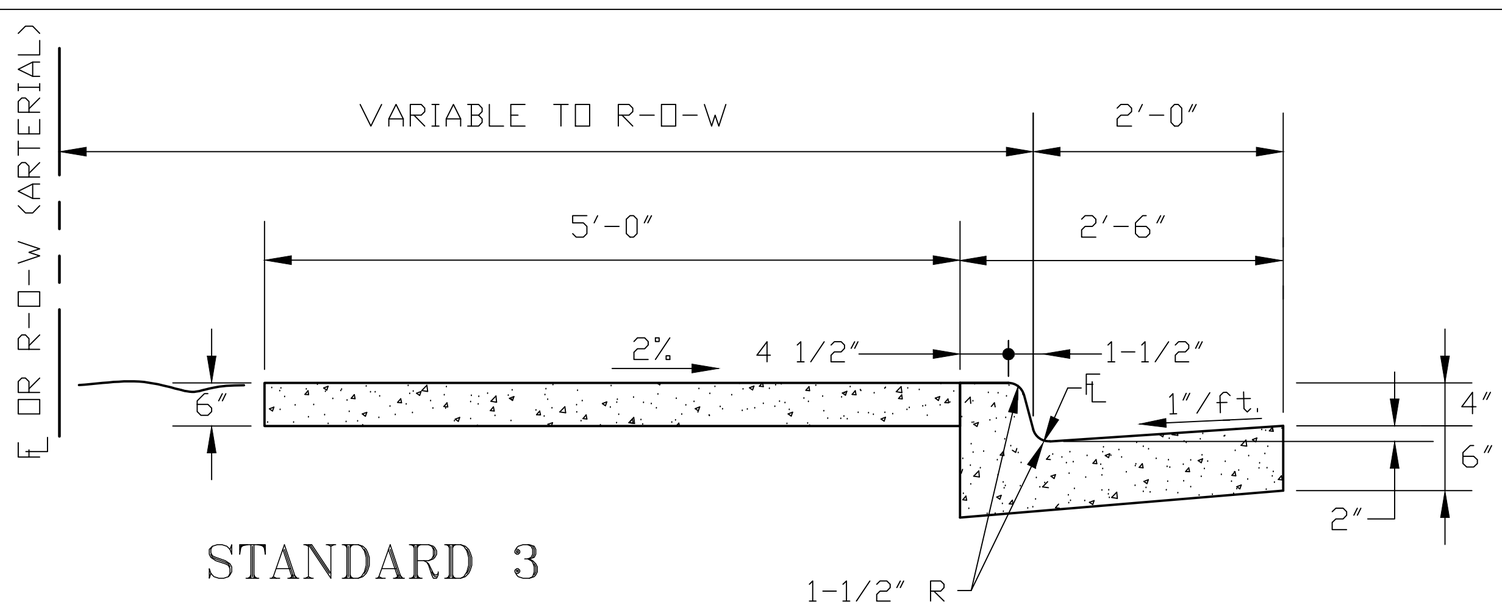

STANDARD 3

* SEE STANDARD NO. 10 FOR CONCRETE JOINT DETAILS
* SIDEWALK WIDTH SHALL BE SPECIFIED ON THE CONSTRUCTION PLANS.
* 6″ VERTICAL CURB, GUTTER, AND SIDEWALK IS REQUIRED FOR COLLECTOR AND ARTERIAL STREETS.

6" VERTICAL CURB, GUTTER AND ATTACHED SIDEWALK

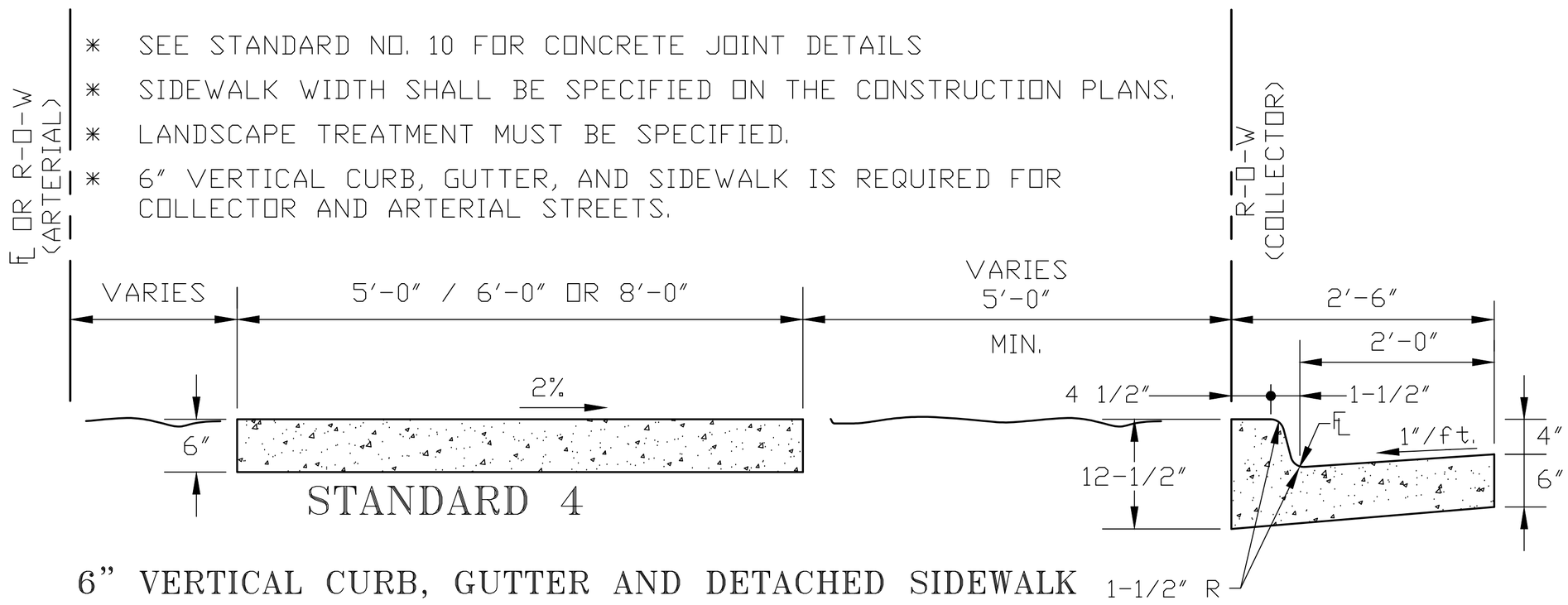

STANDARD 4

6" VERTICAL CURB, GUTTER AND DETACHED SIDEWALK

DATE: 07/15/2019	JEFFERSON COUNTY DIVISION. of TRANSPORTATION & ENGINEERING 100 JEFFERSON CNTY. PKWY., SUITE 3500 GOLDEN, CO. 80419 (303) 271-8419
DRAWN BY: D.A.M.	
CHECKED BY: STAFF	
SCALE:	STANDARDS 2, 3 & 4
FILE: STND-2-3-4	

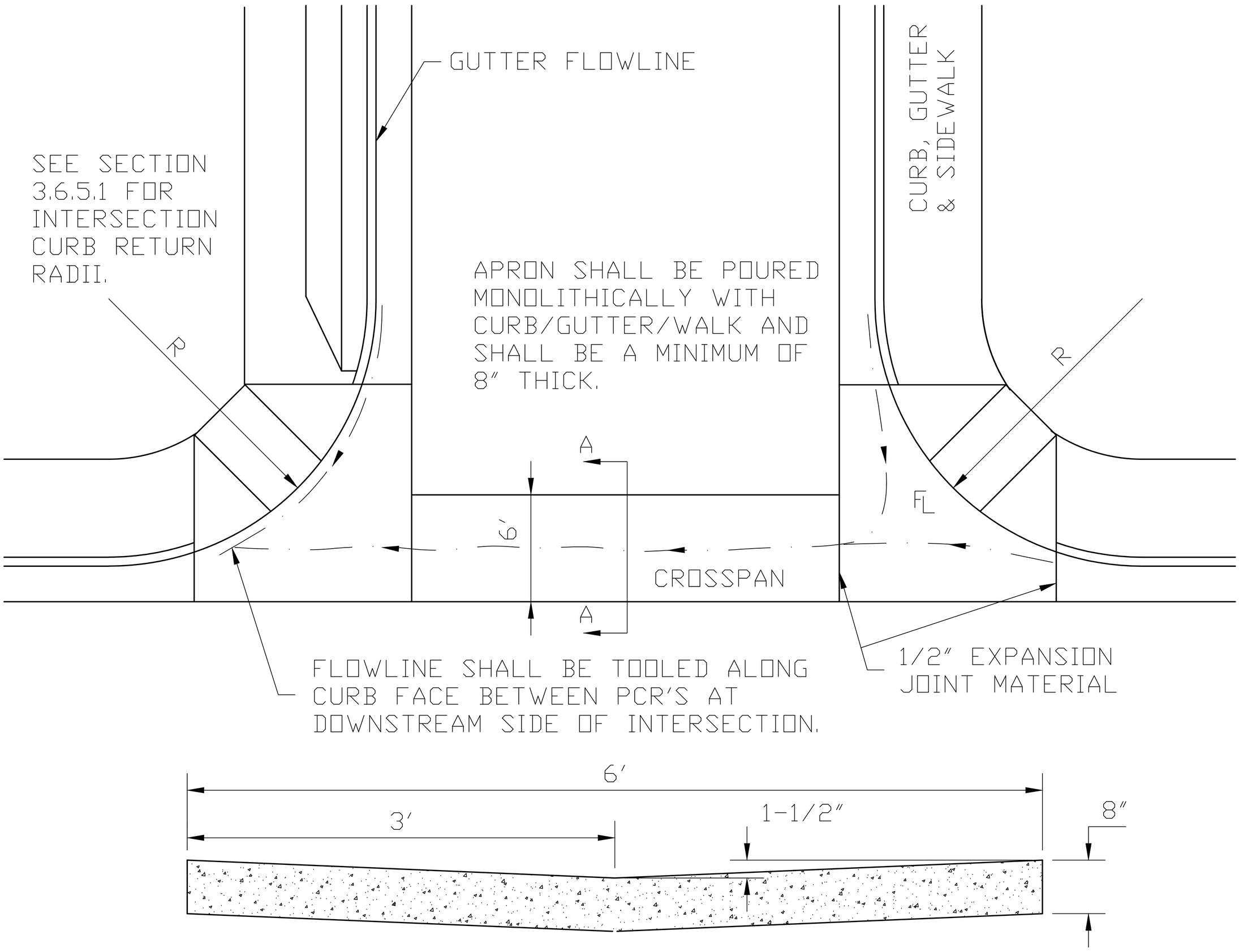

SECTION A – A
6 FOOT CROSSPAN

NOTE:

* SEE STANDARD NO. 10 FOR CONCRETE JOINT DETAILS.
* EXPANSION JOINTS ARE REQUIRED AT P.C.R.'S.
* CROSSPANS ARE NOT PERMITTED ACROSS ARTERIAL/COLLECTOR STREETS.

DATE: 7/30/2018	JEFFERSON COUNTY DIVISION of TRANSPORTATION AND ENGINEERING 100 JEFFERSON CNTY. PKWY., SUITE 3500 GOLDEN, CO. 80419 (303) 271-8495
DRAWN BY: D.A.M.	
CHECKED BY: STAFF	TYPICAL INTERSECTION CROSSPAN
SCALE:	
FILE: STND-5	

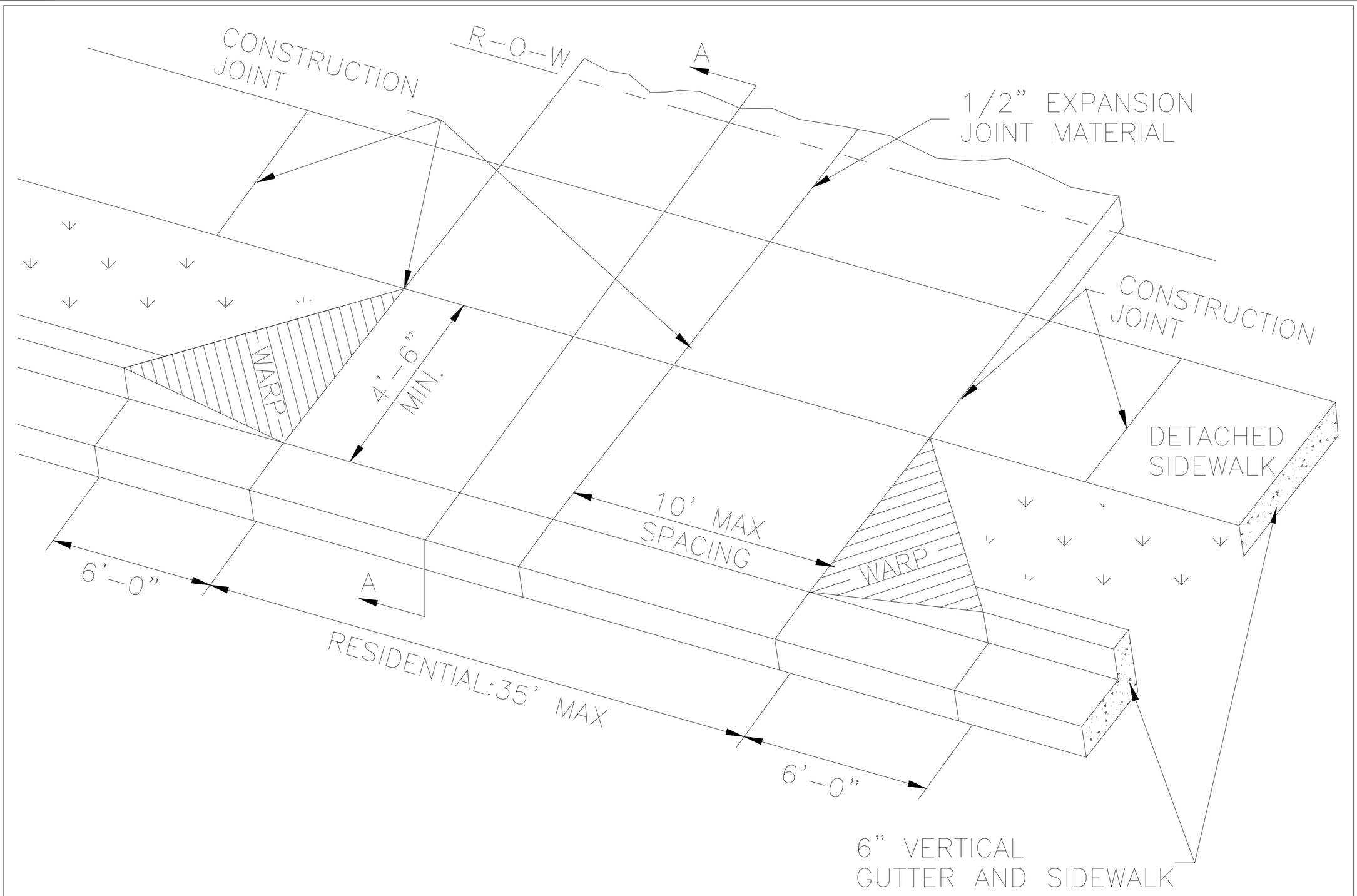

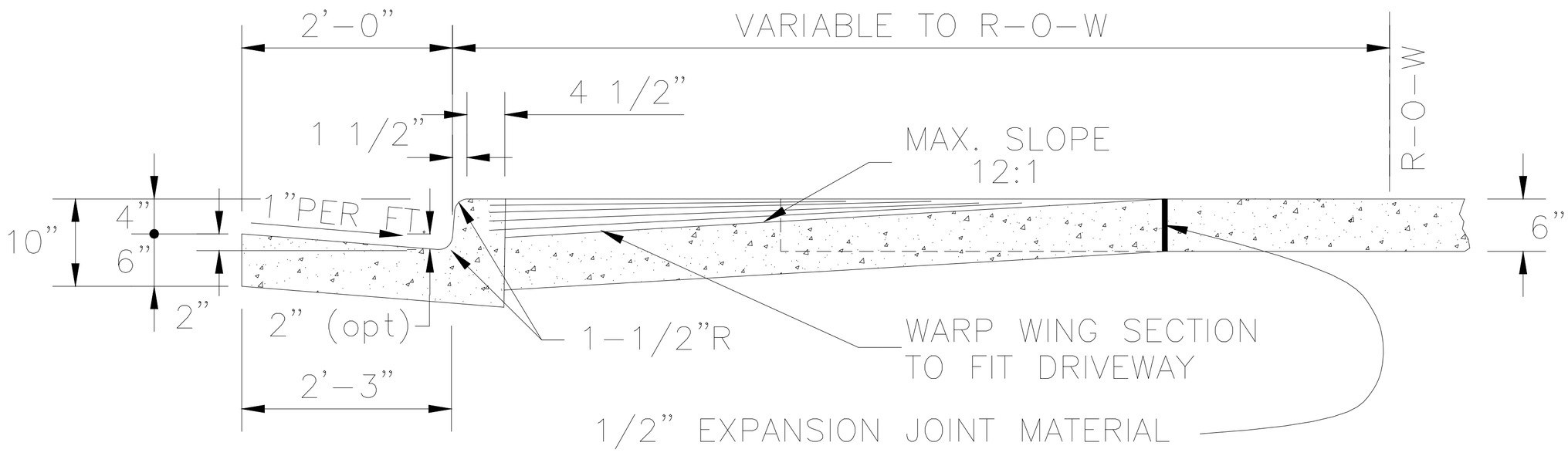

SECTION A - A

NOTE:

* THIS STANDARD IS NOT ALLOWED ON ARTERIAL STREETS.
* REFER TO DRIVEWAY INTERSECTION SPACING REQUIREMENTS IN THIS MANUAL.
* SEE STANDARD NO. 10 FOR CONCRETE JOINT DETAILS.

DATE: 12/8/2015	JEFFERSON COUNTY DIVISION of TRANSPORTATION AND ENGINEERING 100 JEFFERSON CNTY. PKWY., SUITE 3500 GOLDEN, CO. 80419 (303) 271-8495
DRAWN BY: D.A.M.	
CHECKED BY: STAFF	DRIVEWAY SECTION FOR 6" VERTICAL CURB & GUTTER
SCALE:	
FILE: STND-6	

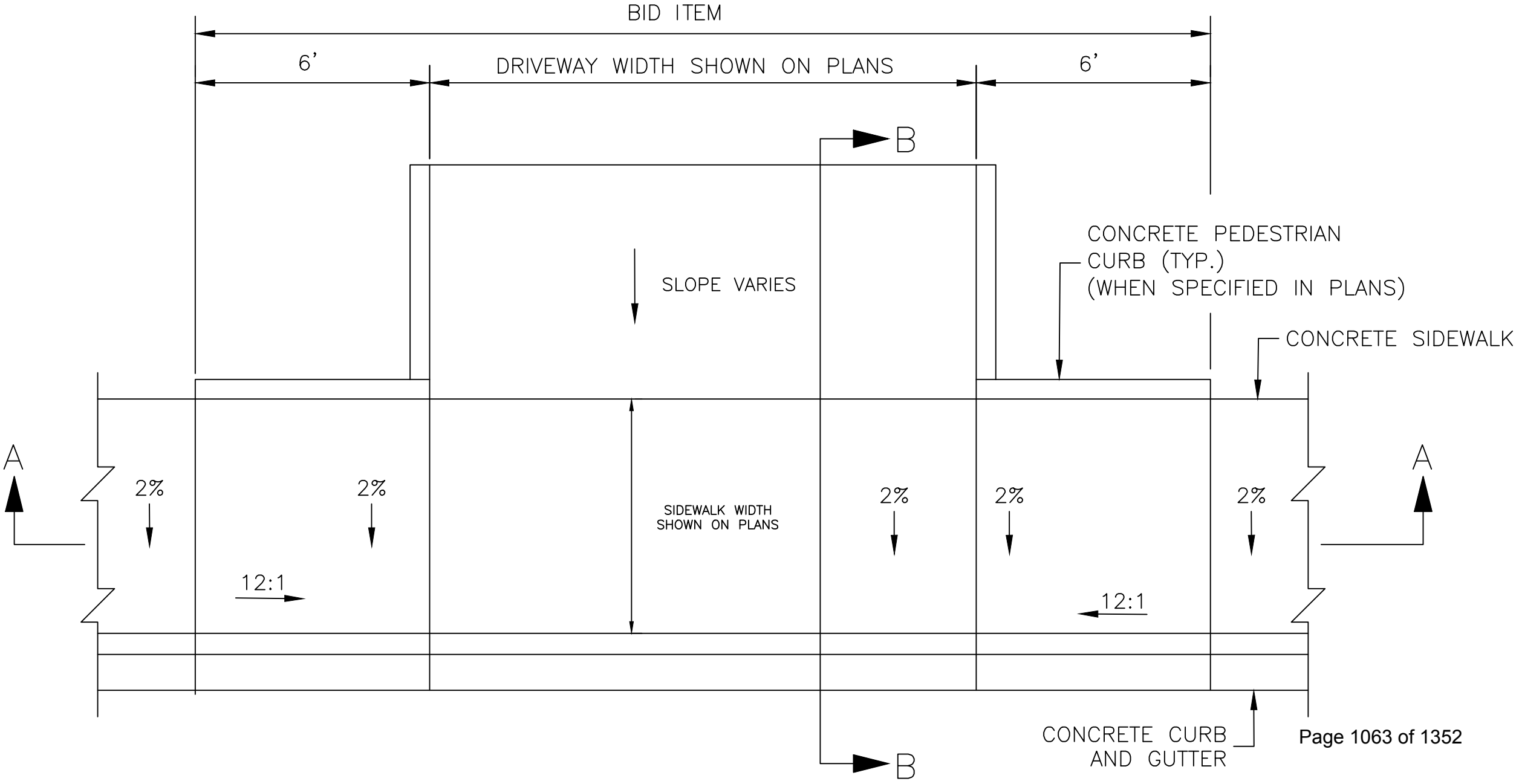
BID ITEM
6'
DRIVEWAY WIDTH SHOWN ON PLANS
6'
B
SLOPE VARIES
CONCRETE PEDESTRIAN
CURB (TYP.)
(WHEN SPECIFIED IN PLANS)
CONCRETE SIDEWALK
A
2%
2%
SIDEWALK WIDTH
SHOWN ON PLANS
2%
2%
2%
A
12:1
12:1
CONCRETE CURB
AND GUTTER
B

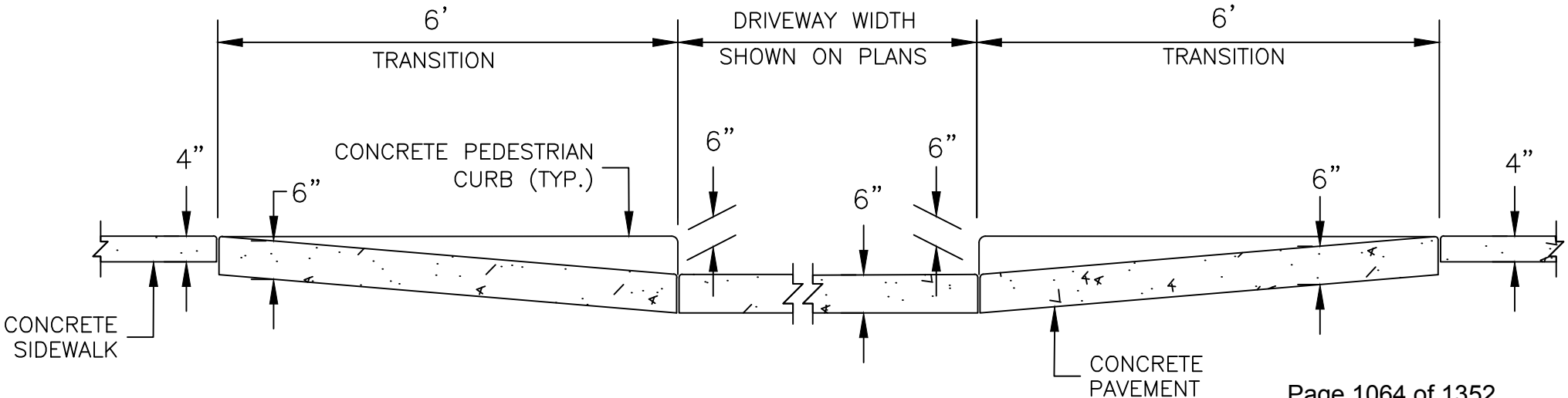
6'
TRANSITION
DRIVEWAY WIDTH
SHOWN ON PLANS
6'
TRANSITION
4"
6"
CONCRETE PEDESTRIAN
CURB (TYP.)
6"
6"
6"
6"
4"
CONCRETE
SIDEWALK
CONCRETE
PAVEMENT

SECTION A – A

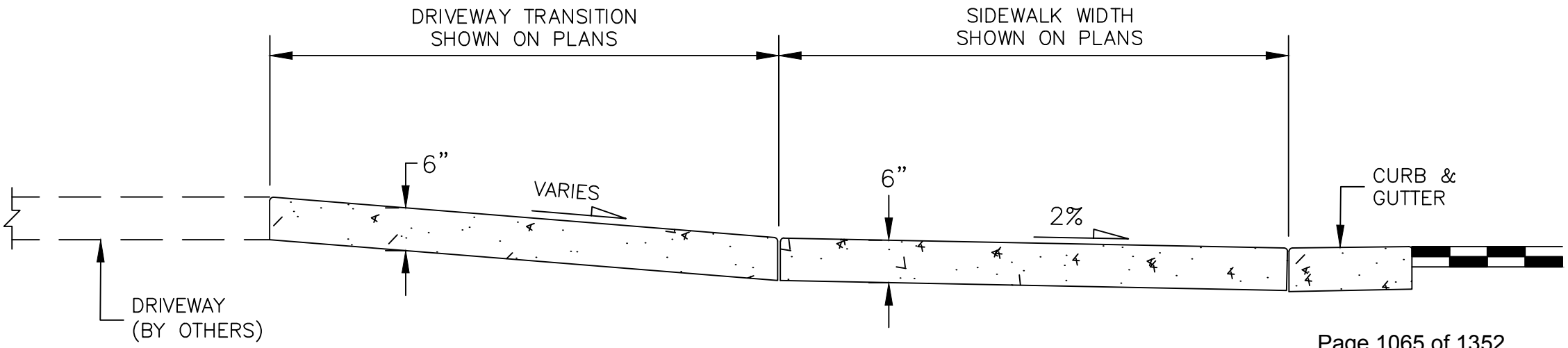
DRIVEWAY TRANSITION
SHOWN ON PLANS
SIDEWALK WIDTH
SHOWN ON PLANS
6"
VARIES
6"
2%
CURB &
GUTTER
DRIVEWAY
(BY OTHERS)

SECTION B – B

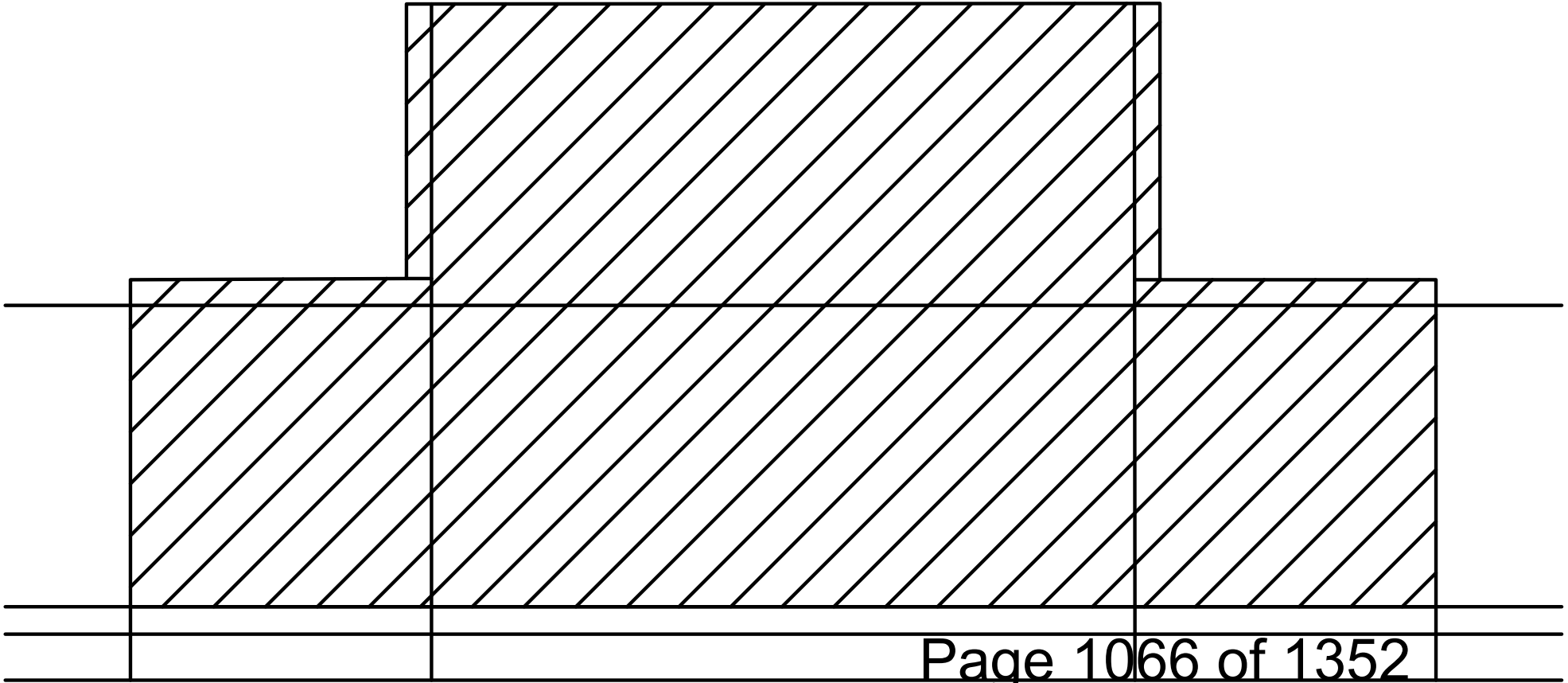

CONCRETE PAVEMENT PAY AREA

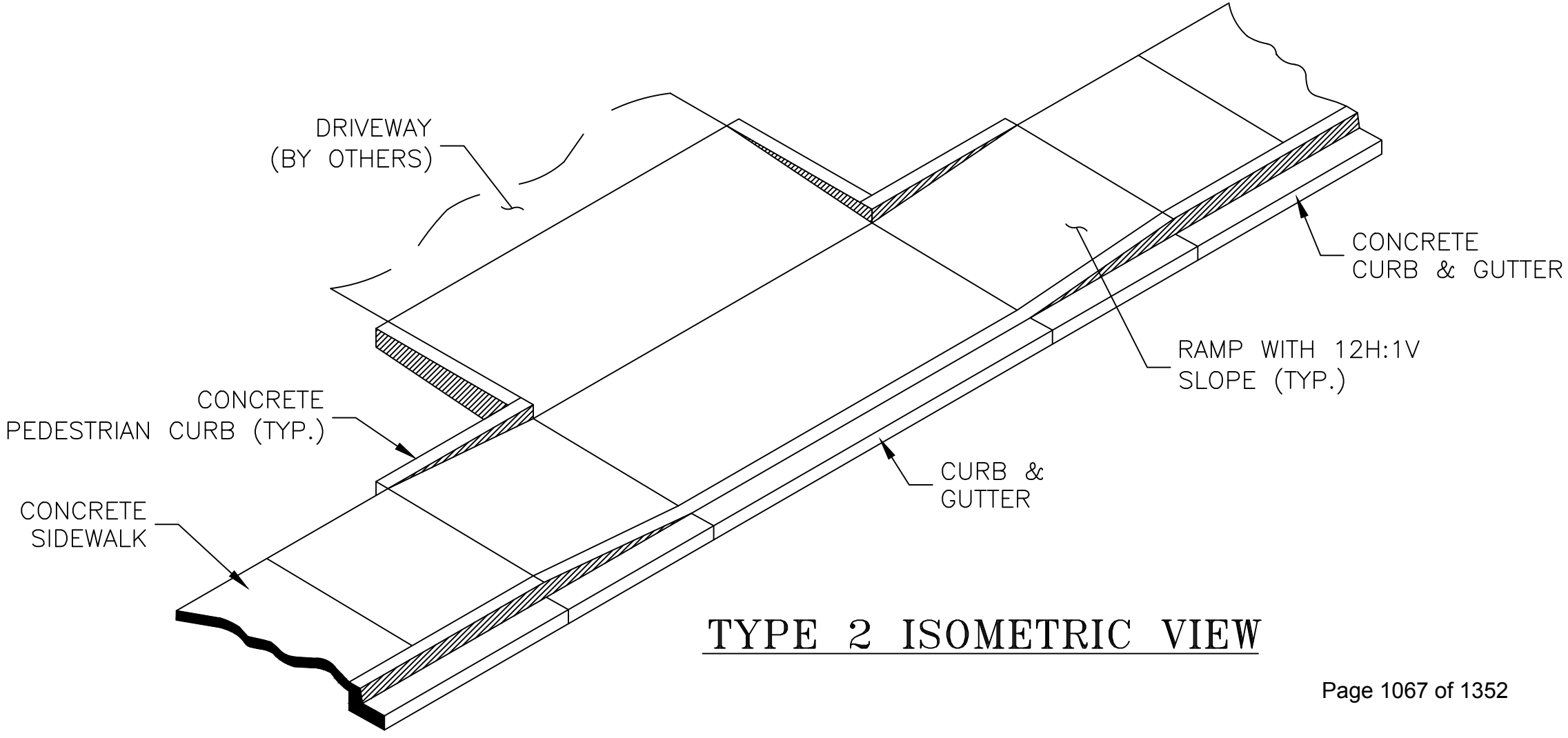

TYPE 2 ISOMETRIC VIEW

NOTE:

1. DRAINAGE STRUCTURES, TRAFFIC SIGNAL EQUIPMENT, JUNCTION BOXES, AND OTHER OBSTRUCTIONS SHOULD NOT BE PLACED IN FRONT OF THE DRIVEWAY RAMP ACCESS AREAS.

2. FOR THE CURB AND GUTTER SHOWN, SEE PLANS FOR CURB TYPE.

3. RAMP SLOPES SHALL BE 12:1 OR FLATTER.

4. CONSTRUCTION OF THE CONCRETE PEDESTRIAN CURB SHALL BE INCLUDED IN THE UNIT PRICE OF THE CONCRETE PAVEMENT.

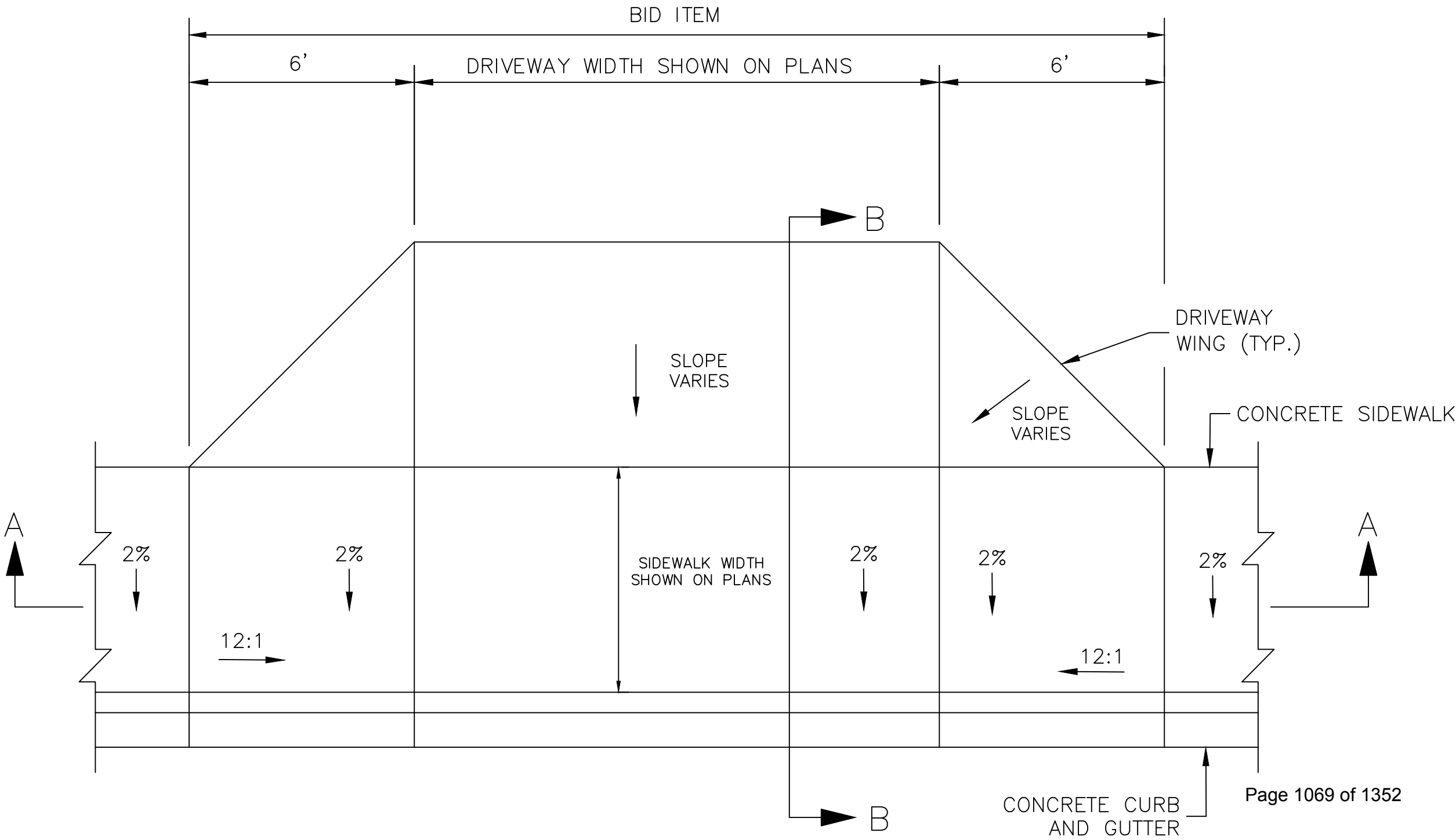
BID ITEM
6'
DRIVEWAY WIDTH SHOWN ON PLANS
6'
B
DRIVEWAY
WING (TYP.)
SLOPE
VARIES
SLOPE
VARIES
CONCRETE SIDEWALK
A
A
2%
2%
SIDEWALK WIDTH
SHOWN ON PLANS
2%
2%
2%
12:1
12:1
B
CONCRETE CURB
AND GUTTER

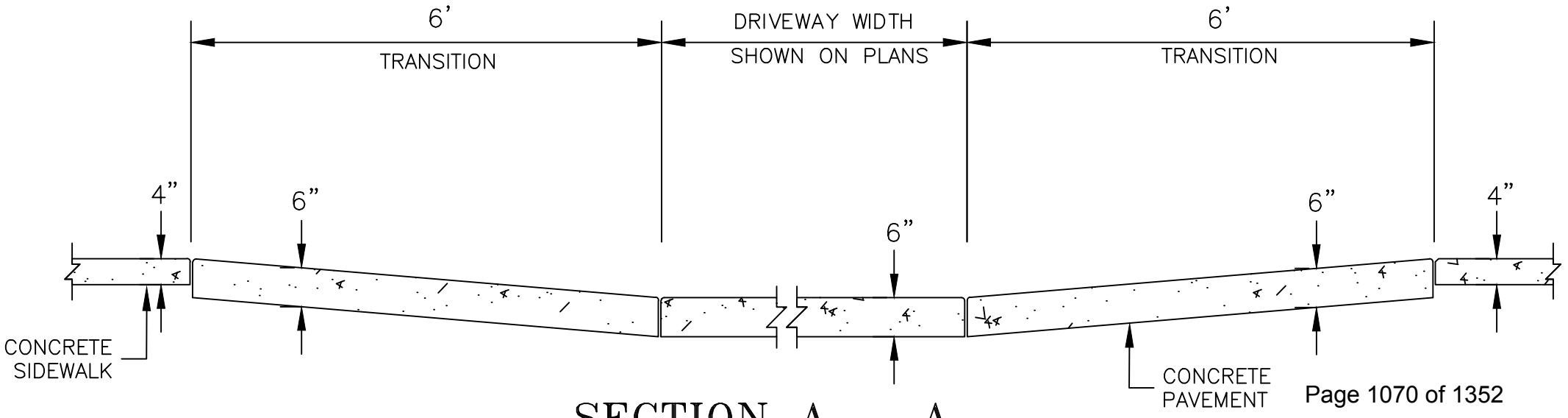
6'
TRANSITION
DRIVEWAY WIDTH
SHOWN ON PLANS
6'
TRANSITION
4"
6"
6"
6"
4"
CONCRETE
SIDEWALK
CONCRETE
PAVEMENT

SECTION A – A

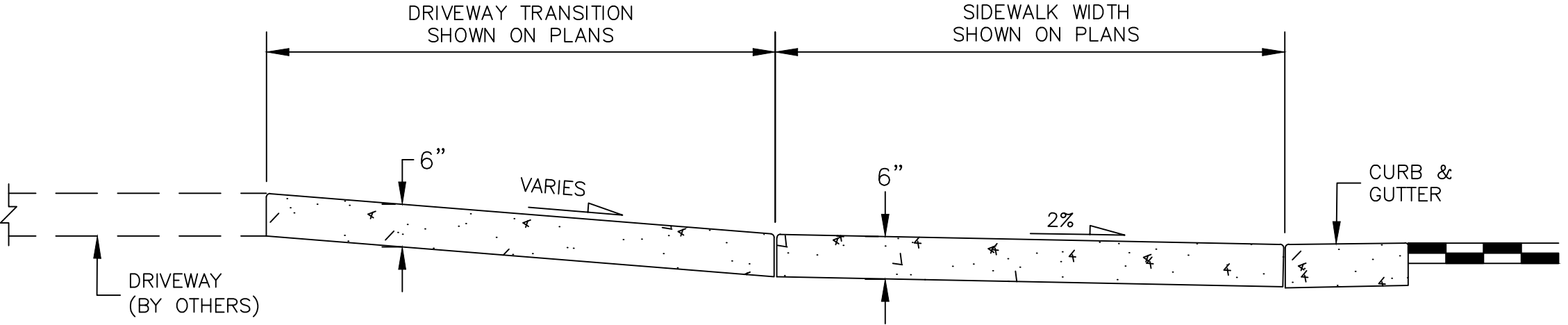
DRIVEWAY TRANSITION
SHOWN ON PLANS
SIDEWALK WIDTH
SHOWN ON PLANS
6"
VARIES
6"
2%
CURB &
GUTTER
DRIVEWAY
(BY OTHERS)

SECTION B – B

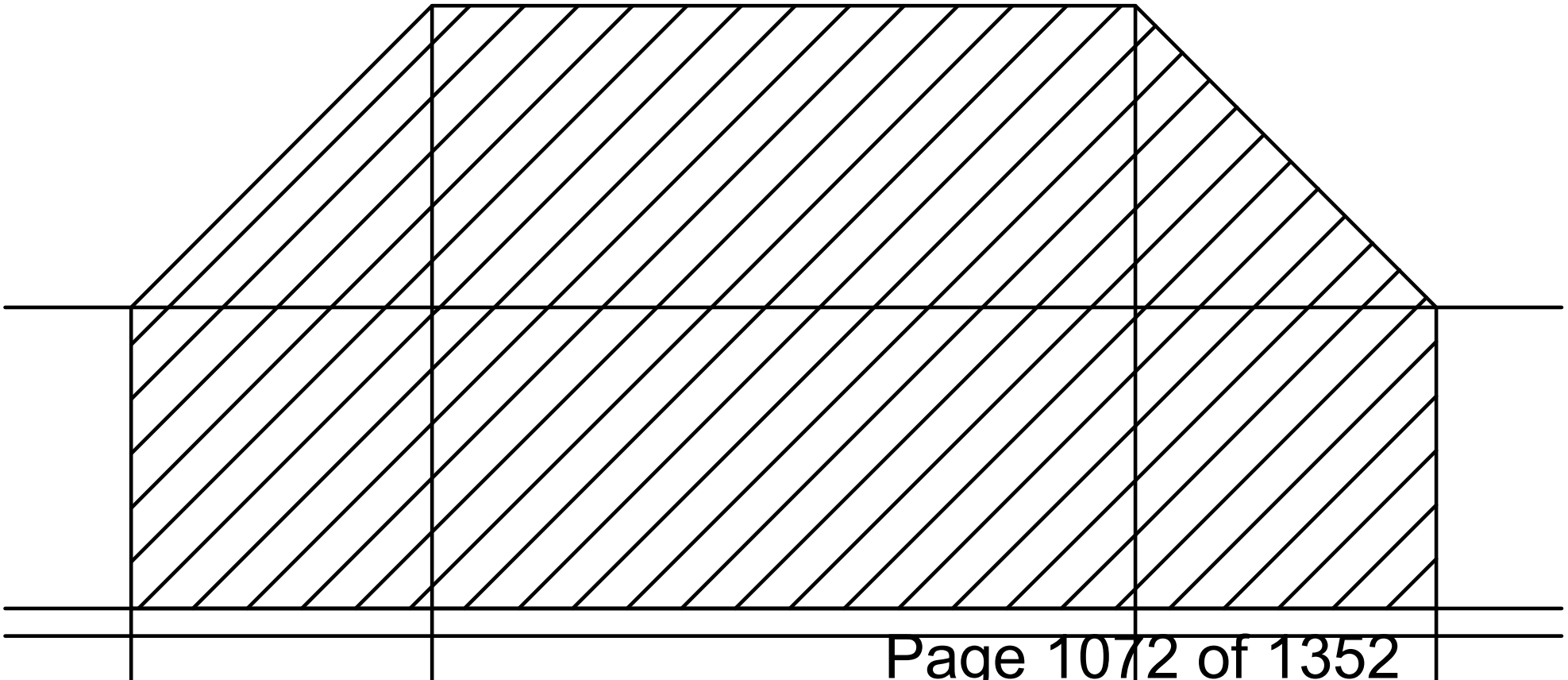

CONCRETE PAVEMENT PAY AREA

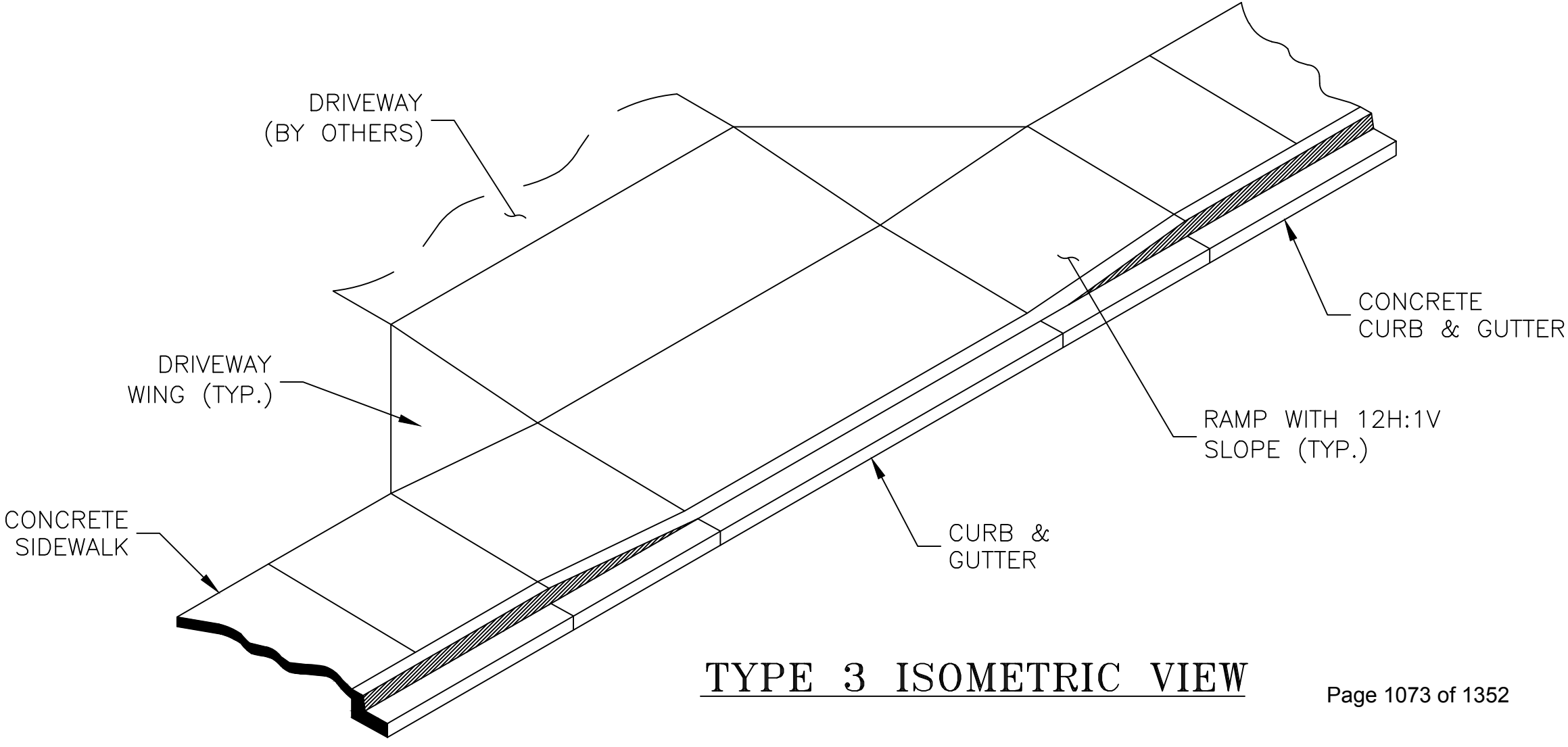

TYPE 3 ISOMETRIC VIEW

NOTE:

1. DRAINAGE STRUCTURES, TRAFFIC SIGNAL EQUIPMENT, JUNCTION BOXES, AND OTHER OBSTRUCTIONS SHOULD NOT BE PLACED IN FRONT OF THE DRIVEWAY RAMP ACCESS AREAS.

2. FOR THE CURB AND GUTTER SHOWN, SEE PLANS FOR CURB TYPE.

3. RAMP SLOPES SHALL BE 12:1 OR FLATTER.

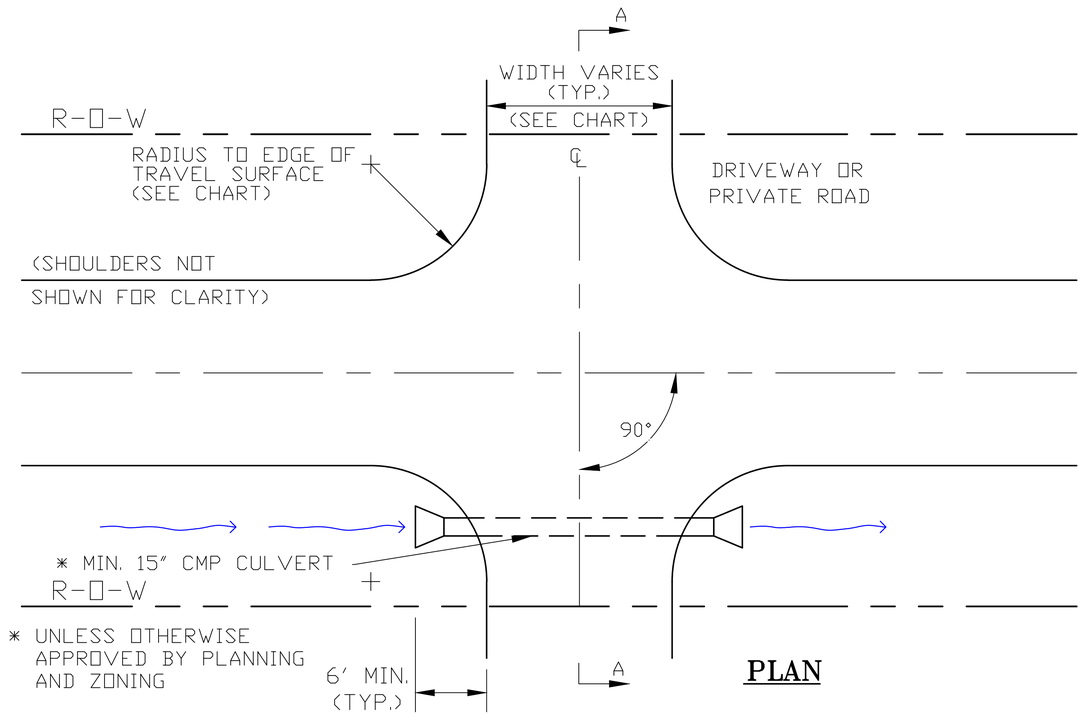

PLAN

DRIVEWAYS AND PRIVATE ROADS SHALL INTERSECT WITH PUBLIC ROADS AT RIGHT (90°) ANGLES OR AS NEARLY AT RIGHT ANGLES AS POSSIBLE FOR A DISTANCE OF:

- 25' FROM THE TRAVEL SURFACE OR WITHIN THE R-O-W (WHICHEVER IS GREATER) WHEN INTERSECTING WITH A MAJOR COLLECTOR OR ARTERIAL ROAD, OR
- 15' FROM THE TRAVEL SURFACE OR WITHIN THE R-O-W (WHICHEVER IS GREATER) WHEN INTERSECTING WITH A COLLECTOR OR LOCAL ROAD.

	TRAVEL SURFACE	
	WIDTH (FEET)	RADIUS (FEET)
DRIVEWAY	10	10
PRIVATE ROAD	16-18	15

* AN ACCESS PERMIT FROM THE JEFFERSON COUNTY PLANNING & ZONING IS REQUIRED FOR A NEW OR MODIFICATION TO AN EXISTING DRIVEWAY OR PRIVATE ROAD ACCESSING A COUNTY ROAD.

PROFILE GRADES OF DRIVEWAYS AND PRIVATE ROADS SHALL BE AT LEAST 1% BUT NO GREATER THAN 4% FOR A DISTANCE OF 10' FROM EDGE OF SHOULDER OR WITHIN THE R-O-W (WHICHEVER IS GREATER) WHEN INTERSECTING WITH A PUBLIC ROAD.

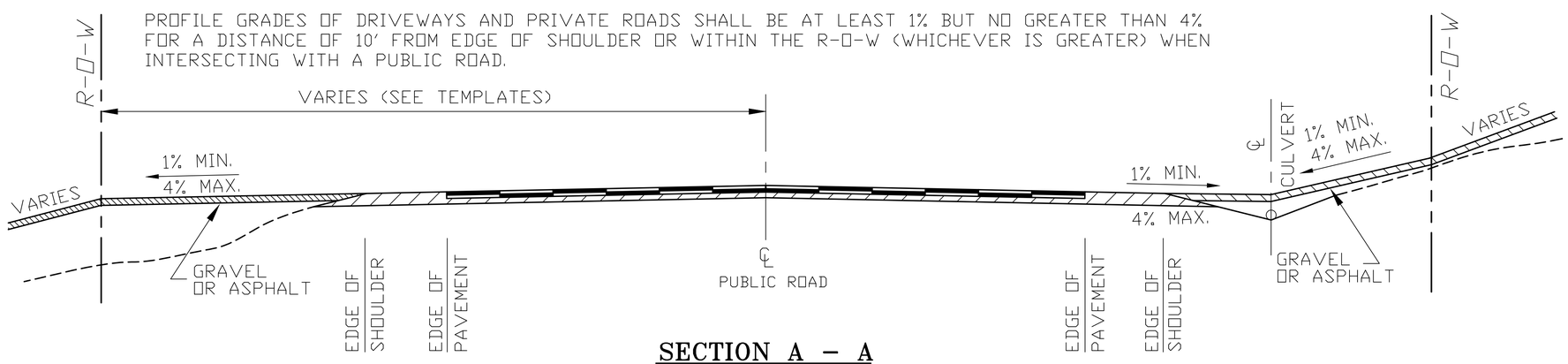

SECTION A – A

DATE:	12/9/2015
SCALE:	
Drawn By:	D.A.M.
Designed By:	STAFF
FILE:	STND-8

DRIVEWAY/PRIVATE ROAD APPROACHES FOR ROADS

JEFFERSON COUNTY
DIVISION of
TRANSPORTATION AND ENGINEERING
100 JEFFERSON CNTY. PKWY., SUITE 3500
GOLDEN, CO. 80419 (303) 271-8460

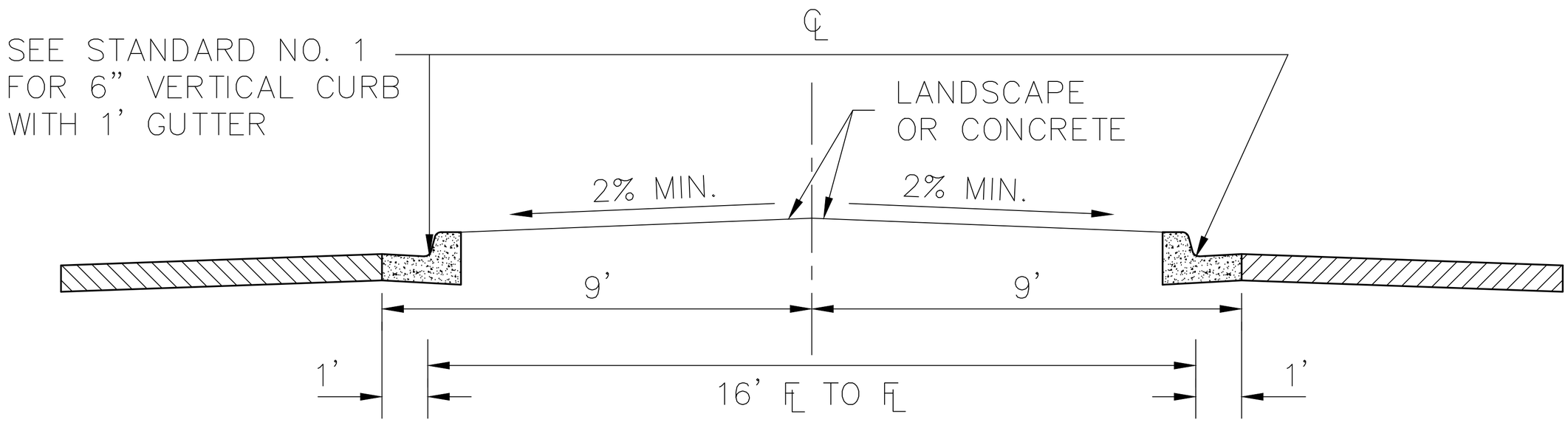

RAISED MEDIAN

* MEDIAN TREATMENT SHALL BE APPROVED BY PLANNING AND ZONING.
* SOIL SHALL BE STERILIZED BENEATH RAISED MEDIANS WITH CONCRETE TREATMENTS.
* CURB INLETS AND STORM SEWER SHALL BE PROVIDED TO DRAIN ALL RAISED MEDIANS.

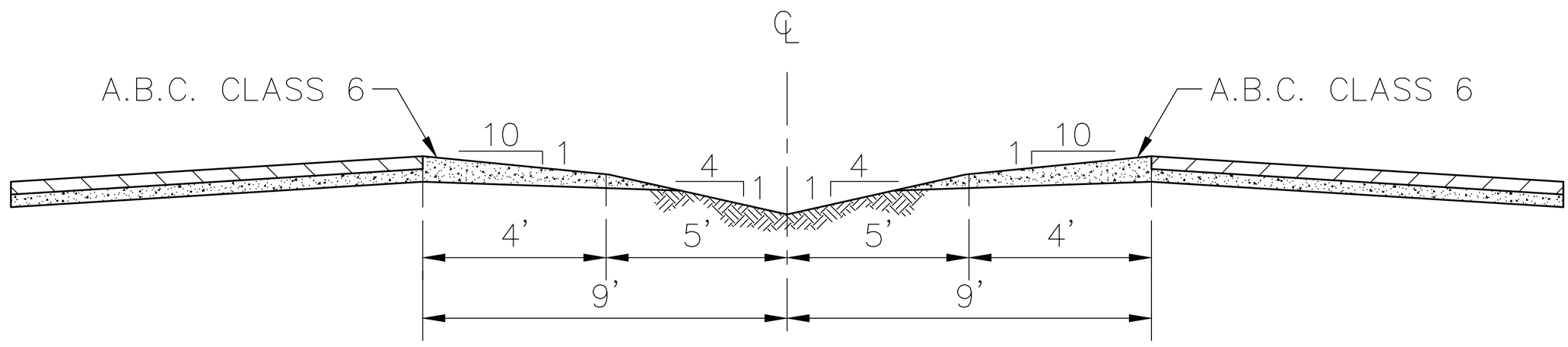

DEPRESSED MEDIAN

* MEDIAN TREATMENT SHALL BE APPROVED BY PLANNING AND ZONING.
* DRAINAGE SYSTEMS SHALL BE PROVIDED FOR IRRIGATED MEDIANS.

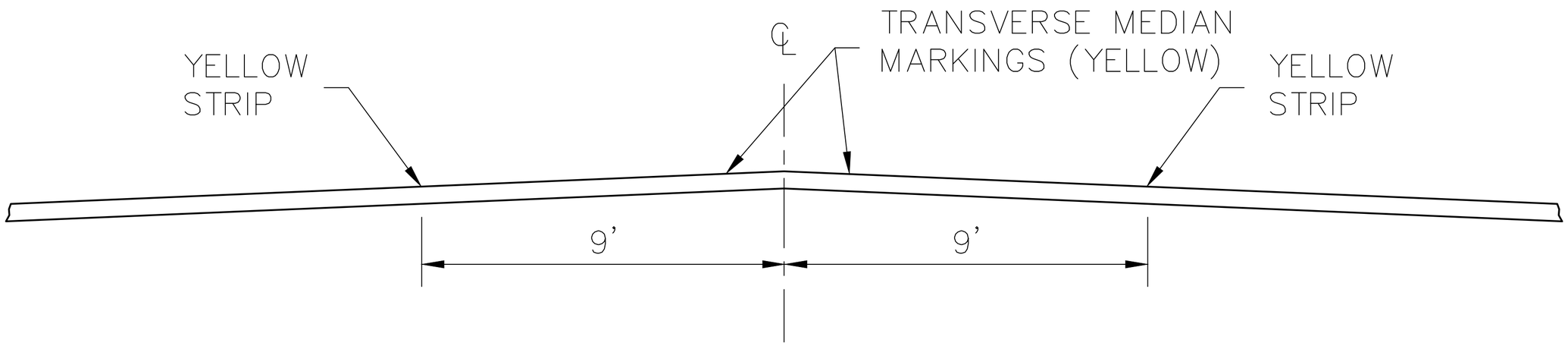

PAVED, FLUSH MEDIAN

* REFER TO CURRENT EDITION OF THE MANUAL ON UNIFORM TRAFFIC CONTROL DEVICES FOR ADDITIONAL STRIPING INFORMATION.

DATE: 12/9/2015	JEFFERSON COUNTY DIVISION of TRANSPORTATION AND ENGINEERING 100 JEFFERSON CNTY. PKWY., SUITE 3500 GOLDEN, CO. 80419 (303) 271-8495
DRAWN BY: D.A.M.	
CHECKED BY: STAFF	
SCALE:	TYPICAL MEDIAN DESIGNS
FILE: STND-9	

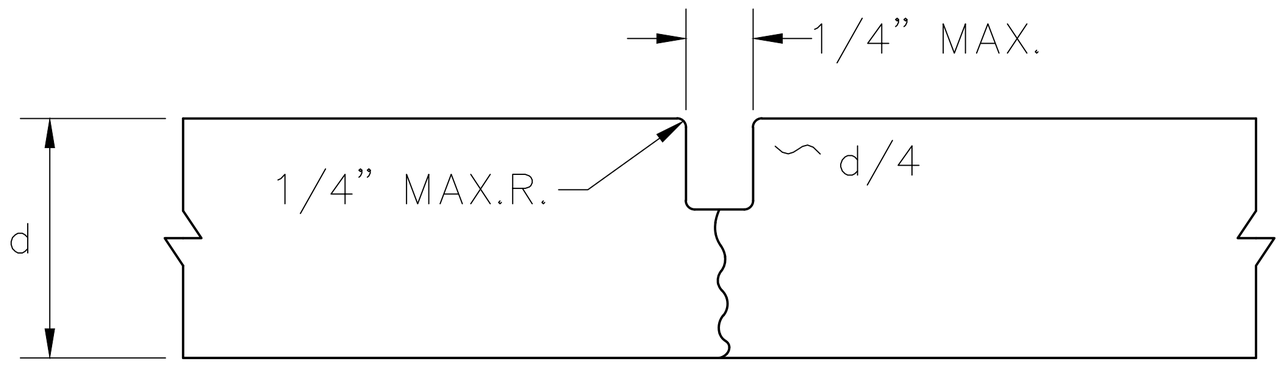

CONTRACTION JOINT

* MAXIMUM CONTRACTION JOINT SPACING FOR CURB,GUTTER AND SIDEWALKS IS 10 FEET.

* SAWCUT JOINTS (IF USED) SHALL BE AFTER CONCRETE HAS SUFFICIENTLY HARDENED, BUT BEFORE UNCONTROLLED CRACKING OCCURS.

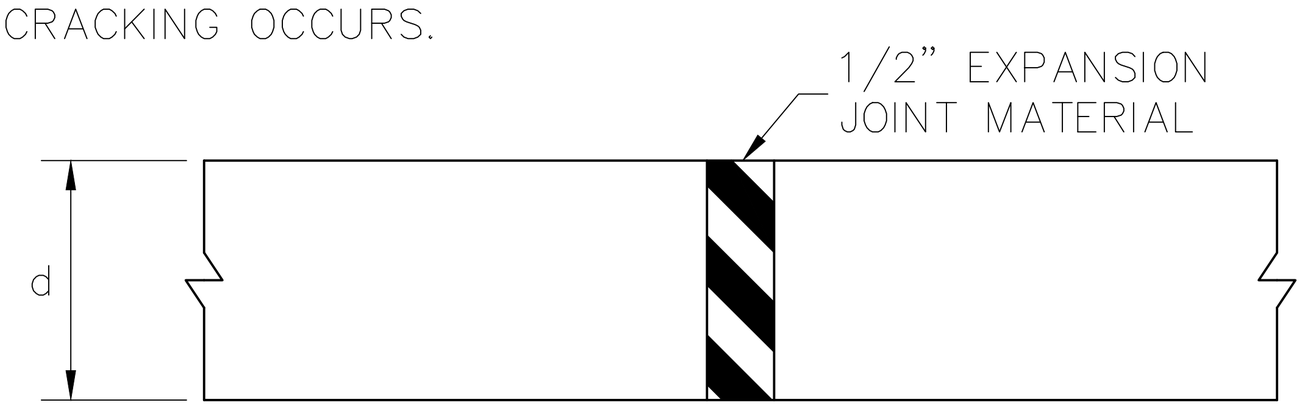

DEPRESSED MEDIAN

* 1/2" EXPANSION JOINT MATERIAL SHALL BE PLACED AS REQUIRED AND SHALL EXTEND THE FULL DEPTH OF CONTACT SURFACE

* EXPANSION JOINTS SHALL BE INSTALLED WHEN ABUTTING EXISTING CONCRETE OR A FIXED STRUCTURE.

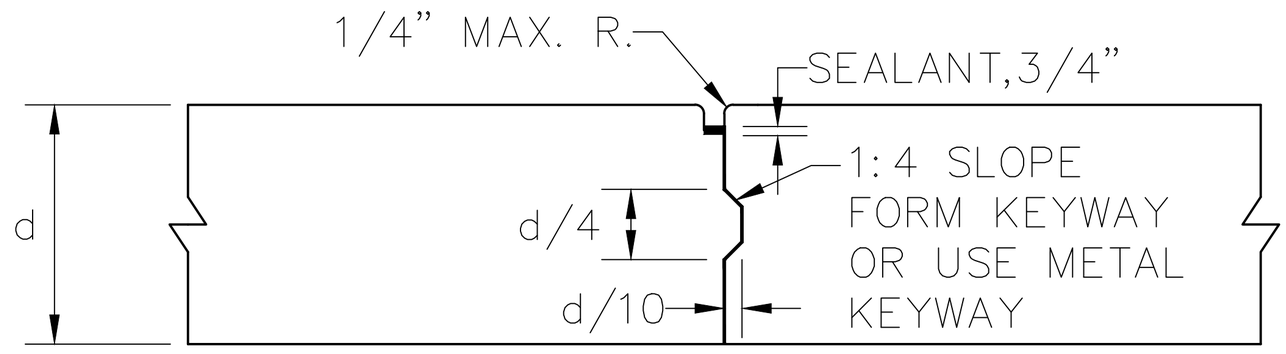

LONGITUDINAL OR TRANSVERSE CONSTRUCTION JOINT

* TRANSVERSE CONSTRUCTION JOINTS REQUIRED AT THE END OF EACH DAY'S POUR AND WHEN THE POUR HAS BEEN SUSPENDED FOR 30 MINUTES OR MORE.

NOTE: JOINT LAYOUT AND JOINT DETAILS FOR CONCRETE STREETS SHALL BE SUBMITTED TO TRANSPORTATION AND ENGINEERING FOR APPROVAL.

DATE: 12/9/2015	JEFFERSON COUNTY DIVISION of TRANSPORTATION AND ENGINEERING 100 JEFFERSON CNTY. PKWY., SUITE 3500 GOLDEN, CO. 80419 (303) 271-8495
DRAWN BY: D.A.M.	
CHECKED BY: STAFF	
SCALE:	CONCRETE JOINT DETAILS
FILE: STND-10	

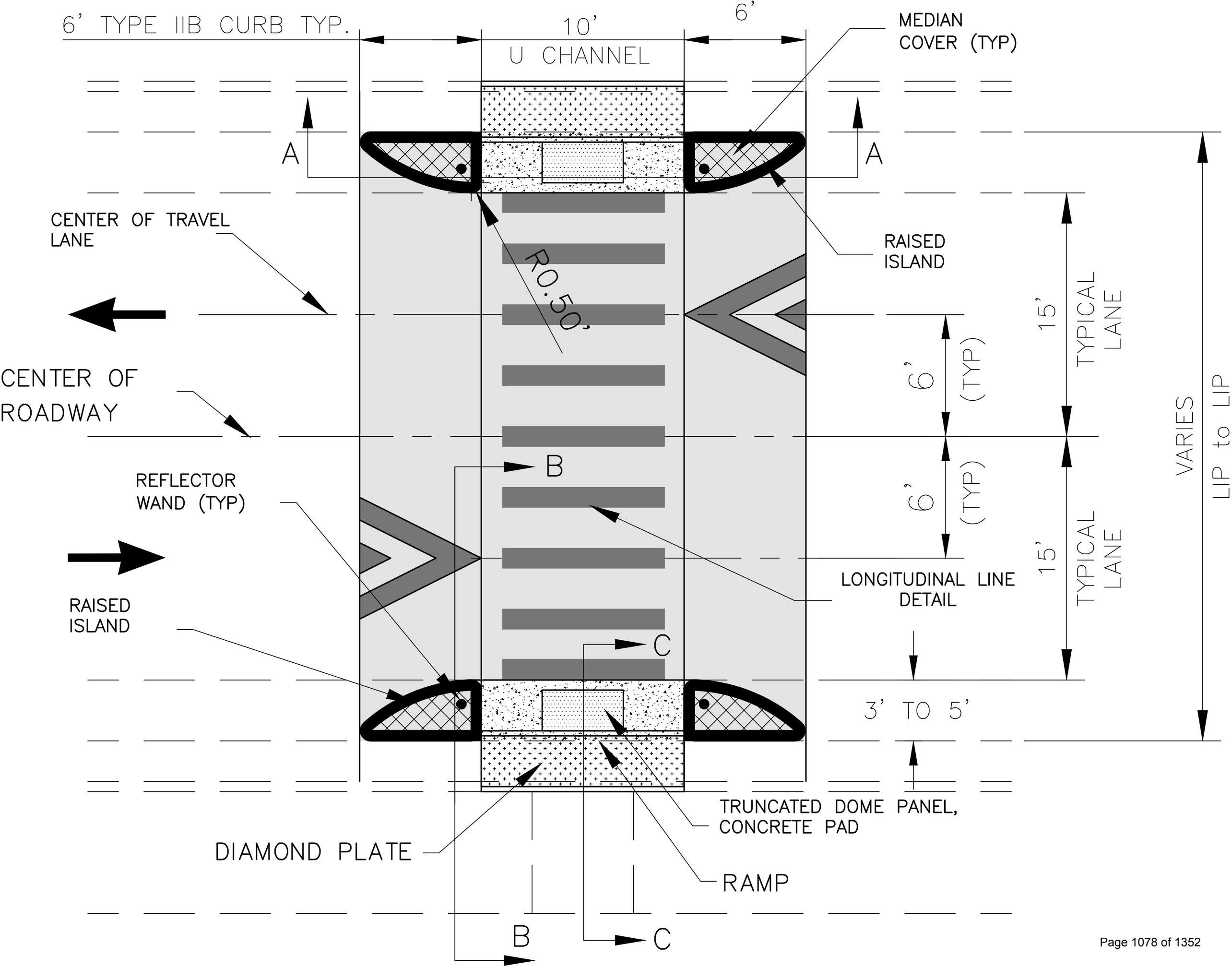
6' TYPE IIB CURB TYP.
10'
U CHANNEL
6'
MEDIAN COVER (TYP)
A
A
CENTER OF TRAVEL LANE
R0.50'
RAISED ISLAND
CENTER OF ROADWAY
6' (TYP)
15' TYPICAL LANE
VARIES
LIP to LIP
B
REFLECTOR WAND (TYP)
6' (TYP)
15' TYPICAL LANE
LONGITUDINAL LINE DETAIL
RAISED ISLAND
C
3' TO 5'
TRUNCATED DOME PANEL, CONCRETE PAD
DIAMOND PLATE
RAMP
B
C

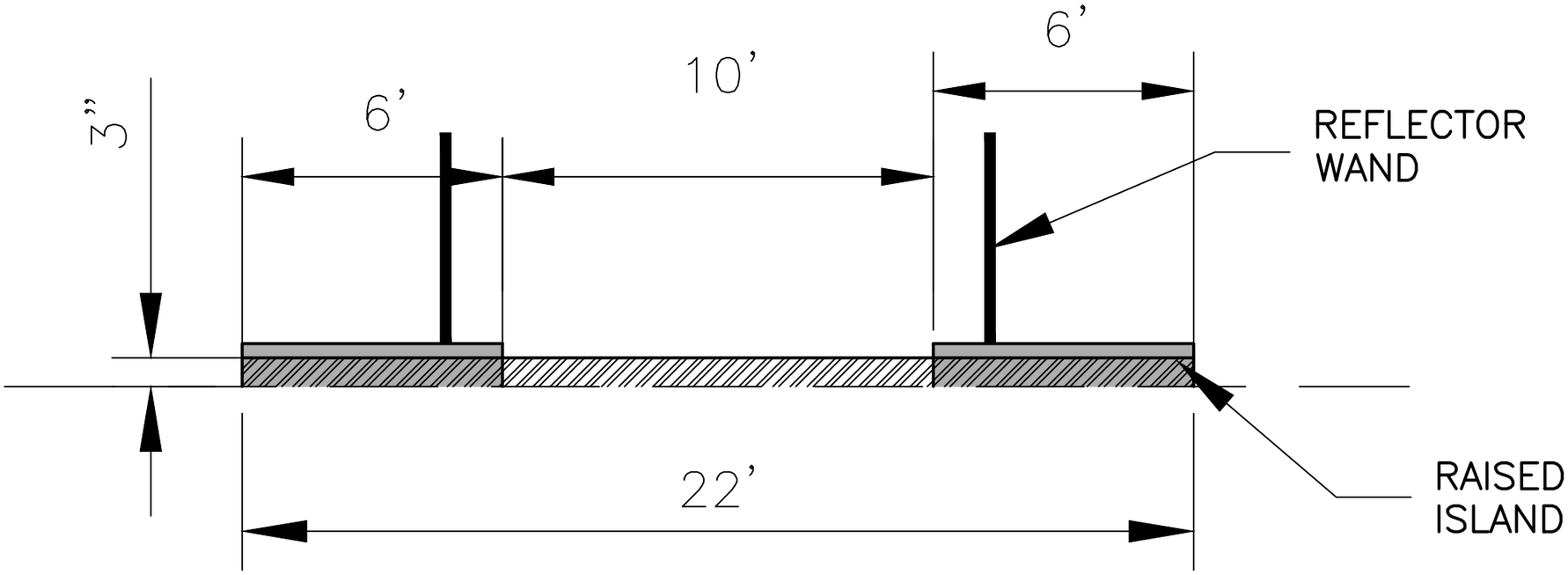

SECTION A–A

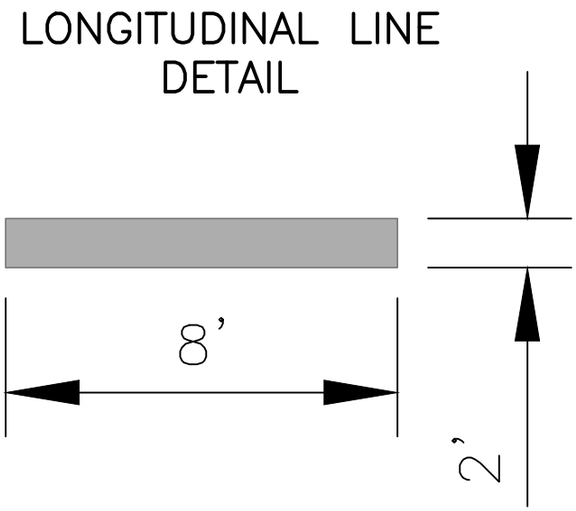

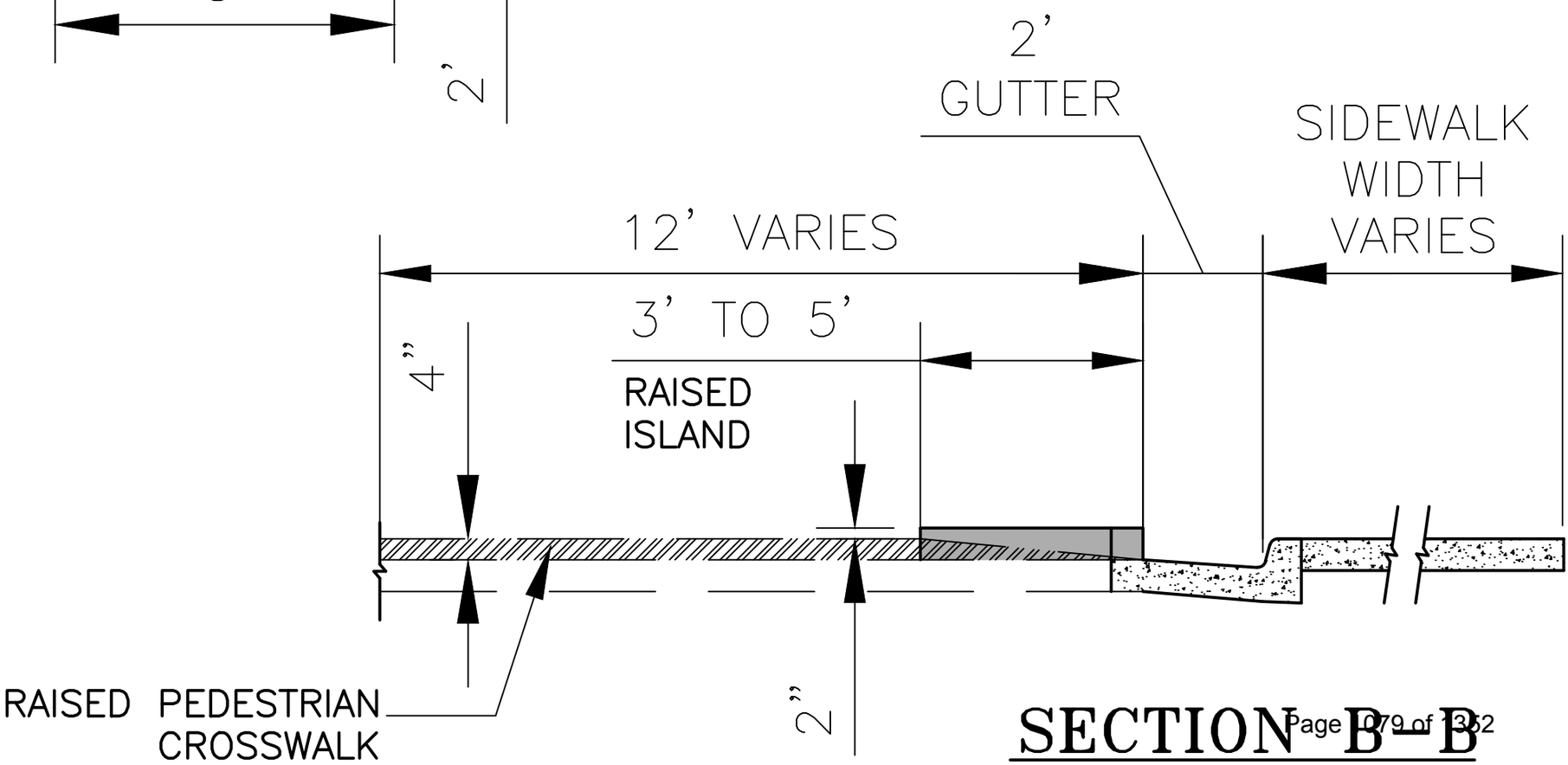

SECTION B–B

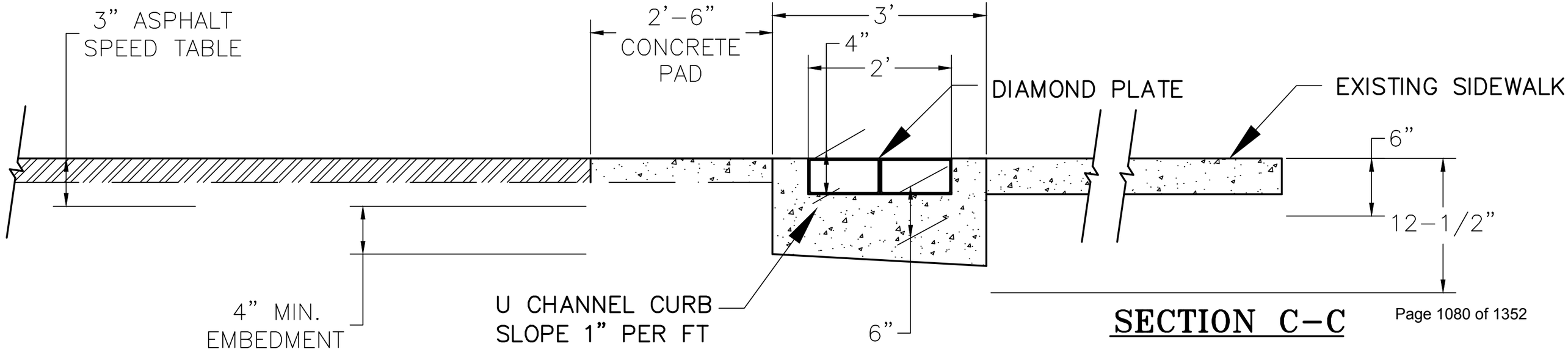
3" ASPHALT
SPEED TABLE
2'-6"
CONCRETE
PAD
3'
4"
2'
DIAMOND PLATE
EXISTING SIDEWALK
6"
12-1/2"
4" MIN.
EMBEDMENT
U CHANNEL CURB
SLOPE 1" PER FT
6"

SECTION C-C

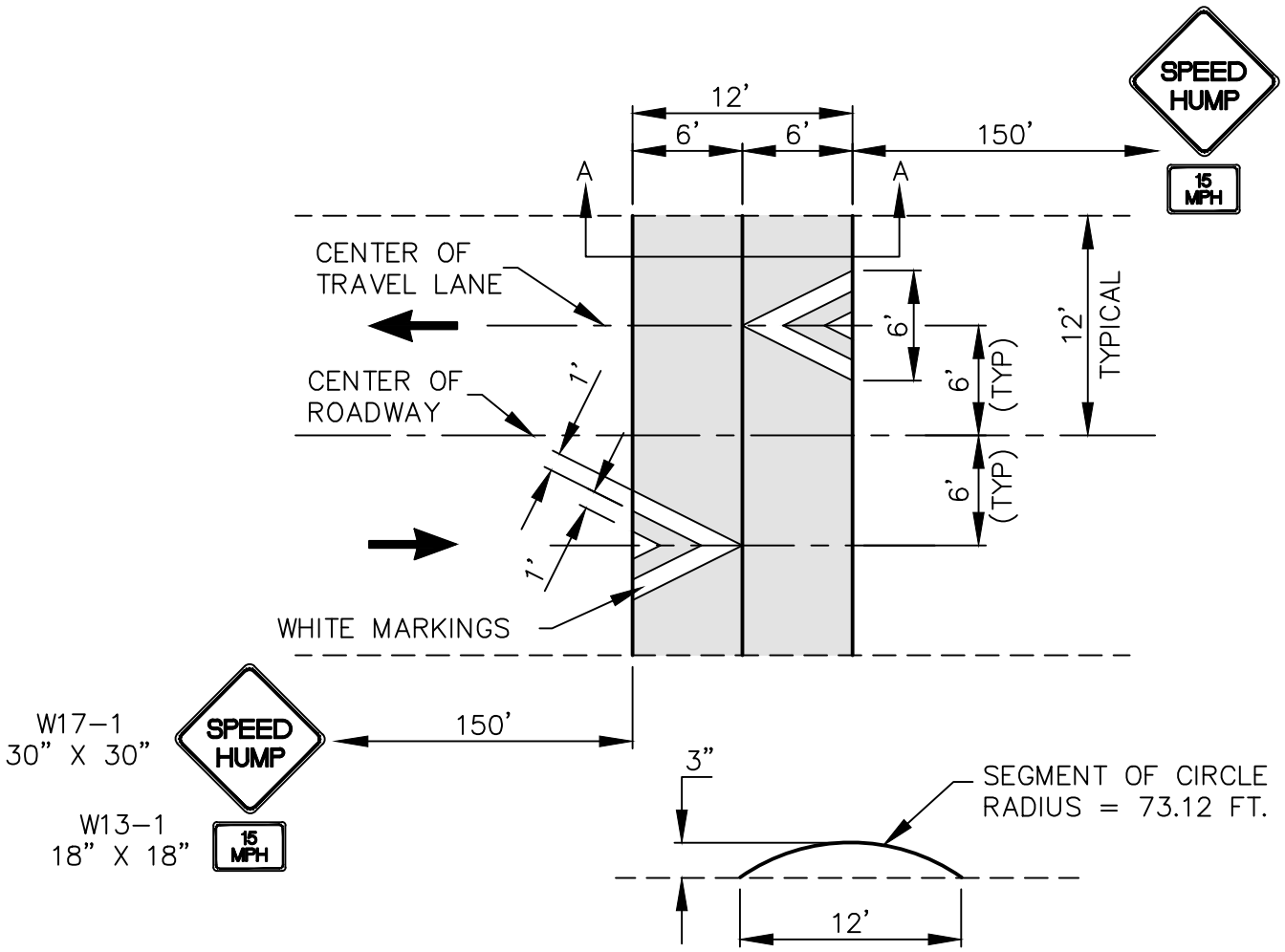

SECTION A-A

NOTES:

PAVEMENT MARKINGS SHALL BE PERMANENT MARKINGS (THERMOPLASTIC, STAMARK, ETC.)

ADVISORY SPEED LIMIT MAY BE LOWER DUE TO STREET GEOMETRICS.

THE EXACT LOCATION OF SPEED HUMP, MARKINGS AND SIGNS WILL BE DETERMINED IN THE FIELD BY THE ENGINEER. (JEFFERSON COUNTY STAFF)

SPEED HUMP INSTALLATION

DATE: 08/23/2022	JEFFERSON COUNTY DIVISION of TRANSPORTATION AND ENGINEERING 100 JEFFERSON CNTY. PKWY., SUITE 3500 GOLDEN, CO. 80419 (303) 271-8495
DRAWN BY: S.A.K.	
CHECKED BY: STAFF	
SCALE:	SPEED HUMP INSTALLATION
FILE: STND-12	

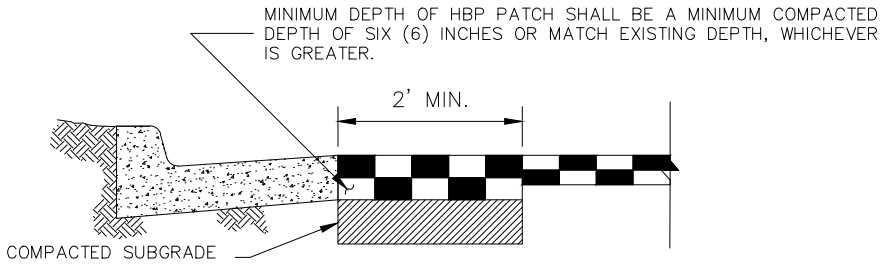

PATCHBACK ADJACENT TO CURB

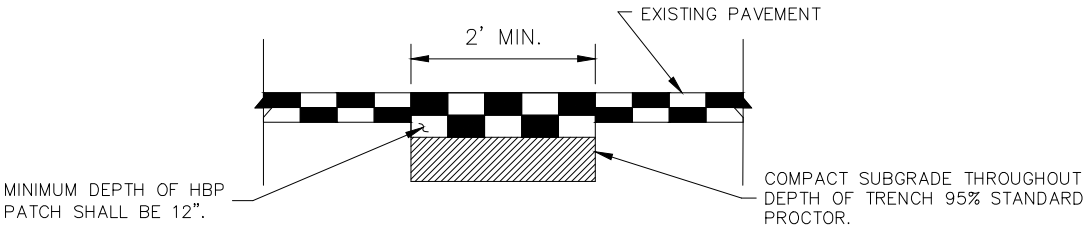

PATCHBACK FOR UTILITY AND SERVICE TRENCHES

NOTE:

* STRAIGHT SAWCUT OR BLADECUT THE EXISTING ASPHALT PAVEMENT WHEN JOINING WITH NEW ASPHALT PAVEMENT.
* PATCH SHALL BE PLACED AND COMPACTED IN LIFTS A MAXIMUM OF 3" IN DEPTH.
* APPLY SS-I TACK COAT TO EXISTING ASPHALT AND/OR CONCRETE SURFACES.
* TRENCHES LESS THAN 2' IN WIDTH MUST RECEIVE PRIOR APPROVAL FROM THE DEPARTMENT OF HIGHWAYS & TRANSPORTATION AND SHALL BE FLOW-FILLED

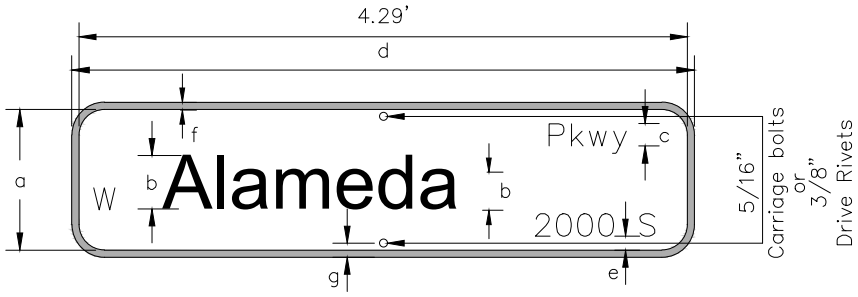

NOTE:

* SIGN BLANKS SHALL BE 6061 OR 5052–H38 ALUMINUM ALLOY .100"
* FACING SHALL BE 3M GREEN ELECTRO CUT FILM OR EQUIVALENT. * LETTERS AND NUMBERS SHALL BE 3M HIGH INTENSITY GRADE PRISMATIC WHITE OR EQUIVALENT.
* ROAD TYPE (AVE, PKWY, ETC.) TO BE CENTERED IF POSSIBLE OVER GAP BETWEEN BLOCK # AND DIRECTION.
* FONT TYPE SHALL BE HIGHWAY GOTHIC B FED KERN REV, HELVETICA MED COMP ACCT AK REV, OR EQUIVALENT.

** POST MOUNTED OVER 40mph: 8" UPPER AND 6" LOWER.

** POST MOUNTED 40mph & UNDER: 6" UPPER AND 4.5" LOWER.

No.	Description	Dimensions (Inches)		
		Overhead	Post-mounted, multi-lane, more than 40 mph	Post-mounted, other (multi-lane, 40 mph or less OR two-lane, all speeds)
a	sign height	18	9	9
b	initial capital letter height for street name	12	8	6
	lower case letter height for street name	9	6	4.5
c	initial capital letter height for street type indicator	5	3	3
	lower case letter height for street type indicator	4.5	2.25	2.25
d	length of sign	varies	varies	varies
e	edge of street type and block number to inside edge of border	0.5	0.5	0.5
f	border thickness	1	0.5	0.5
g	bolt hole center to edge of sign	n/a	1	1

ROAD AND STREET NAME SIGNS

DATE: 08/23/2022	JEFFERSON COUNTY DIVISION of TRANSPORTATION AND ENGINEERING 100 JEFFERSON CNTY. PKWY., SUITE 3500 GOLDEN, CO. 80419 (303) 271–8495
DRAWN BY: S.A.K.	
CHECKED BY: STAFF	STANDARDS 13 & 14
SCALE:	
FILE: STND–13–14	

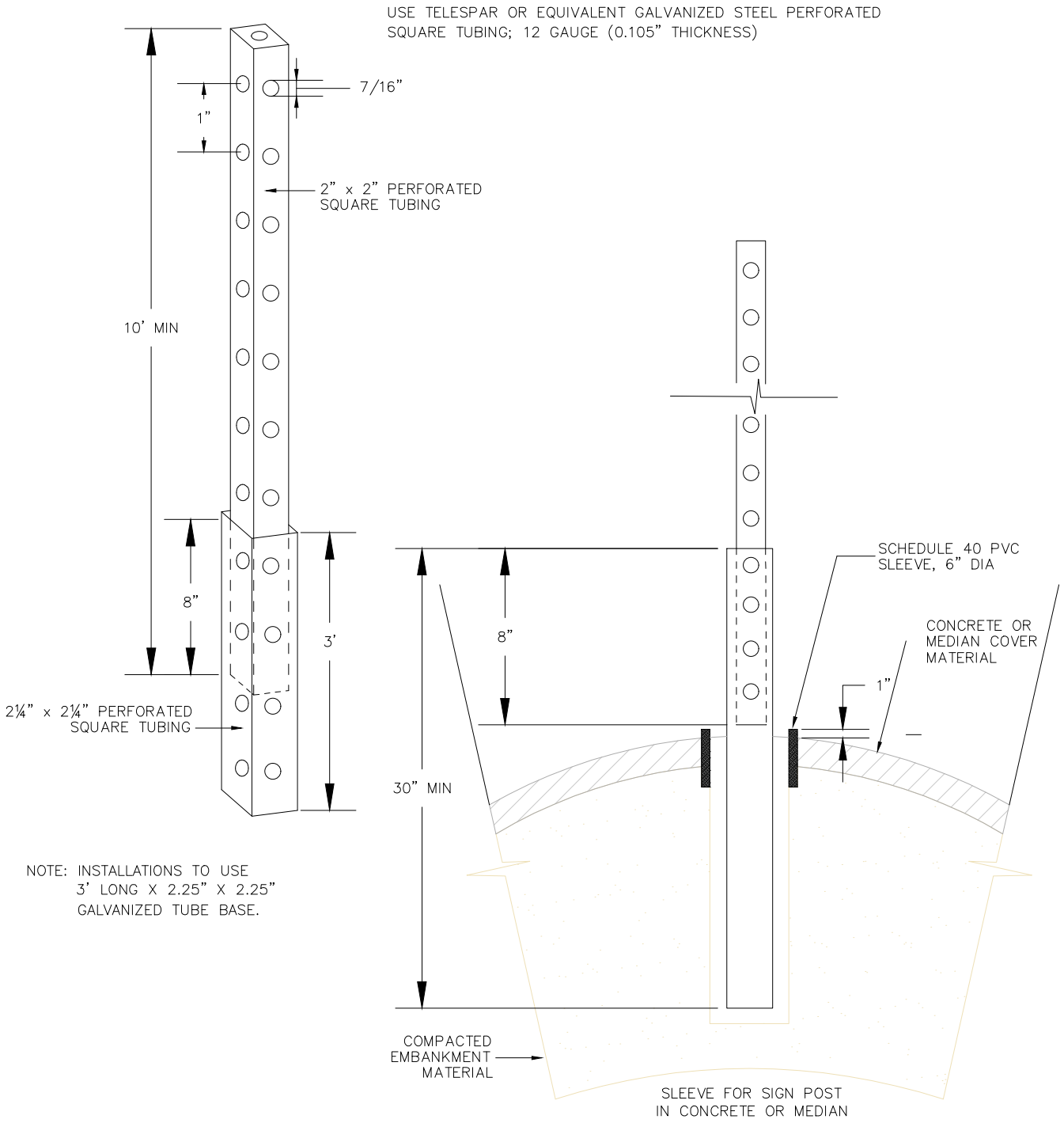

SIGN POST AND BASE

DATE: 08/23/2022	JEFFERSON COUNTY DIVISION of TRANSPORTATION AND ENGINEERING 100 JEFFERSON CNTY. PKWY., SUITE 3500 GOLDEN, CO. 80419 (303) 271-8495
DRAWN BY: S.A.K.	
CHECKED BY: STAFF	
SCALE:	SIGN POST AND BASE
FILE: STND-15	

STEEL POLE - TENON TOP
SIDE MOUNT LUMINAIRES

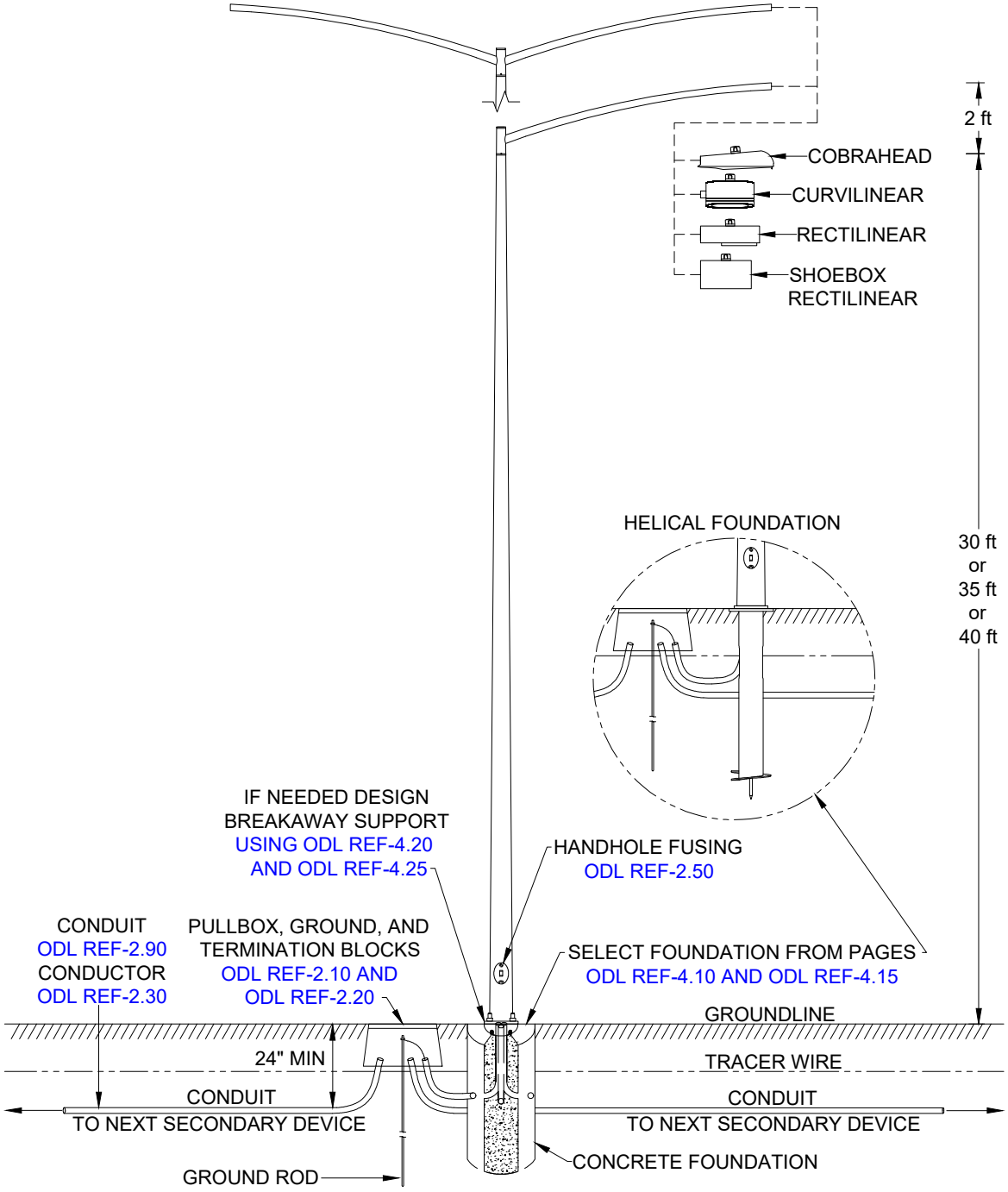

DATE: 08/23/2022	JEFFERSON COUNTY DIVISION of TRANSPORTATION AND ENGINEERING 100 JEFFERSON CNTY. PKWY., SUITE 3500 GOLDEN, CO. 80419 (303) 271-8495
DRAWN BY: S.A.K.	
CHECKED BY: STAFF	TYPICAL ARTERIAL / MAJOR COLLECTOR STREET LIGHTING 1 of 2
SCALE:	
FILE: STND-16	

SIDE MOUNT LUMINAIRE
COBRAHEAD - LED

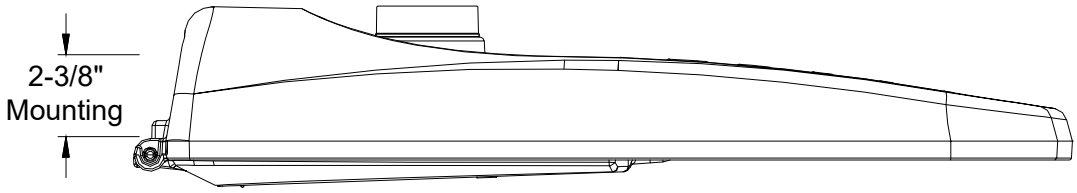

Description: For use on 2-3/8” OD arm	C/U	Luminaire Cat ID	Color
LED			
Cobrahead - 14000 lm LED - type D	**ESLC25LY**	219752	Grey8

Notes:
1. C/Us include the luminaire, and the Long Life photo control.
2. Design type B, type C, type D and type E for LED luminaires. Types B, C, D and E are functional equivalents to 100, 150, 250 and 400-Watt HPS luminaires respectively. The lumens (lm) shown are the delivered lumens. Please contact EDS or the latest specification for wattage rating.
3. Design poles, mast arms, foundations etc. using sections PL-INDEX, AM-INDEX and ODL REF-INDEX.
4. Cobrahead luminaires are slip fit mounted on 2-3/8” Outside Diameter (OD) pipe mast arms.
5. Check for proper illumination levels according to type of application.
6. All standard LED Cobrahead luminaires have multi-voltage drivers rated for 120- 277 V. LED lights can be designed for 120 V, 208 V, 240 V, and 277 V systems.

DATE: 08/23/2022	JEFFERSON COUNTY DIVISION of TRANSPORTATION AND ENGINEERING 100 JEFFERSON CNTY. PKWY., SUITE 3500 GOLDEN, CO. 80419 (303) 271-8495
DRAWN BY: S.A.K.	
CHECKED BY: STAFF	TYPICAL ARTERIAL / MAJOR COLLECTOR STREET LIGHTING 2 of 2
SCALE:	
FILE: STND-16	

STREET NAME SIGN AND BRACKET ON TRAFFIC SIGNAL POLE

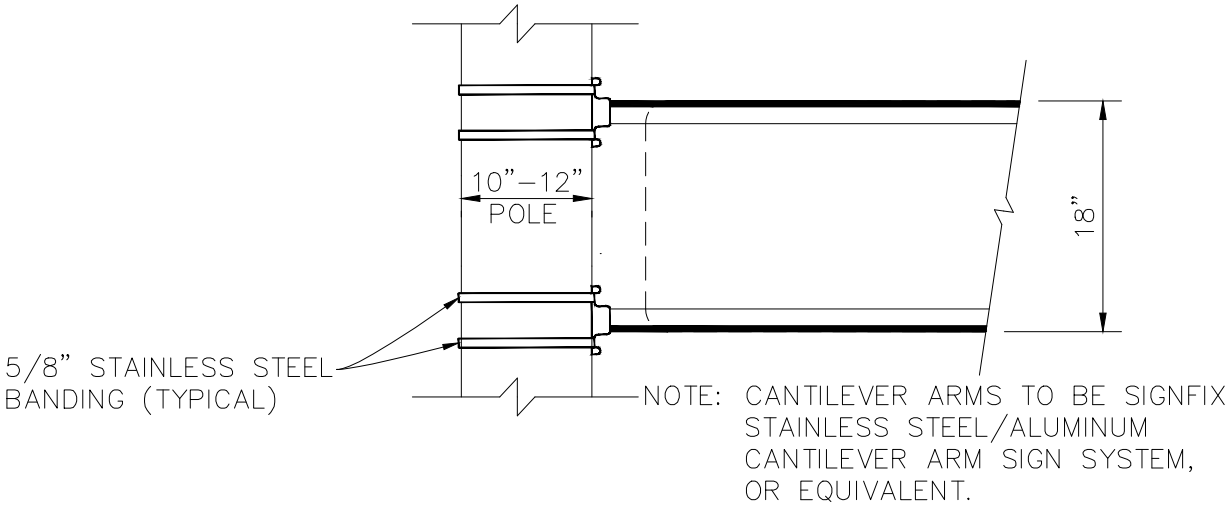

TYPICAL INSTALLATION *

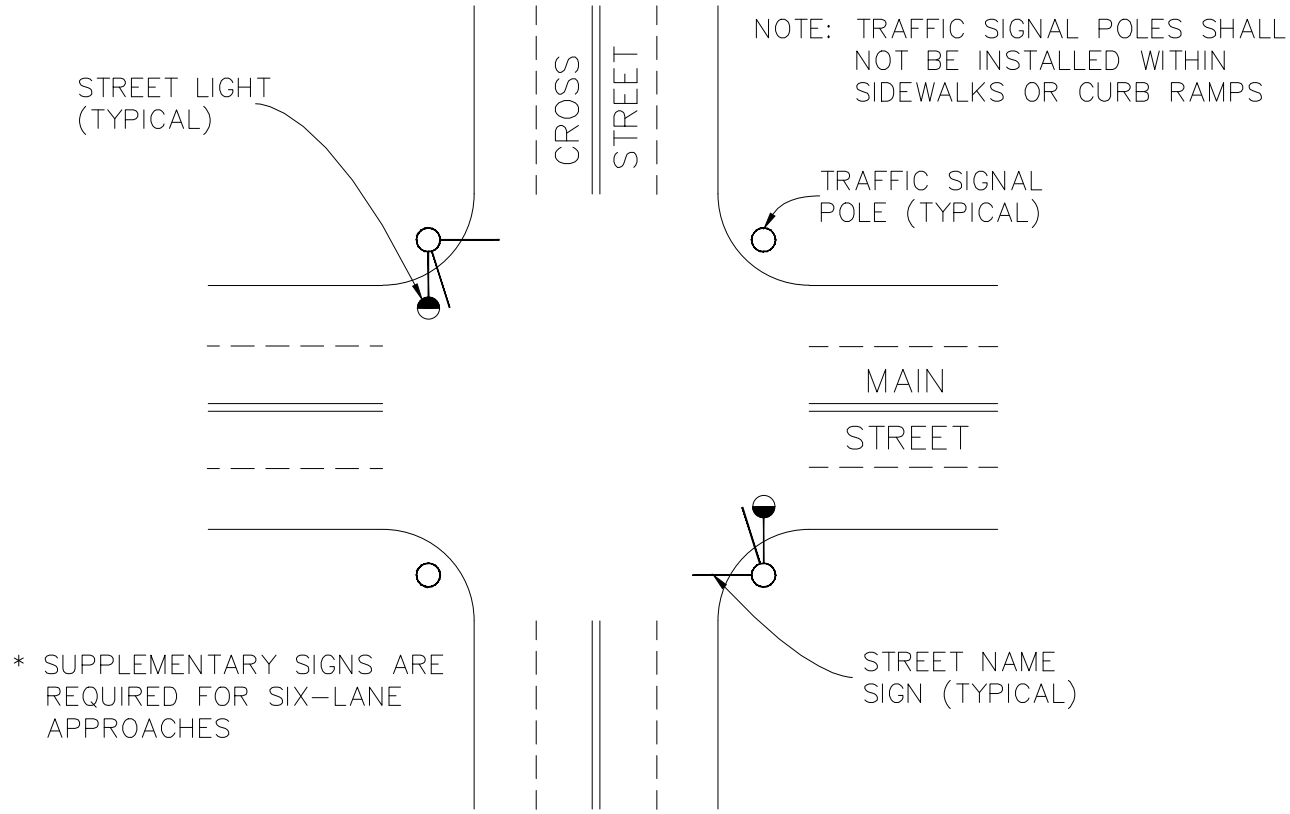

DATE: 08/23/2022	JEFFERSON COUNTY DIVISION of TRANSPORTATION AND ENGINEERING 100 JEFFERSON CNTY. PKWY., SUITE 3500 GOLDEN, CO. 80419 (303) 271–8495
DRAWN BY: S.A.K.	
CHECKED BY: STAFF	STREET NAME SIGN AND BRACKET ON TRAFFIC SIGNAL POLE - TYPICAL
SCALE:	
FILE: STND–17	

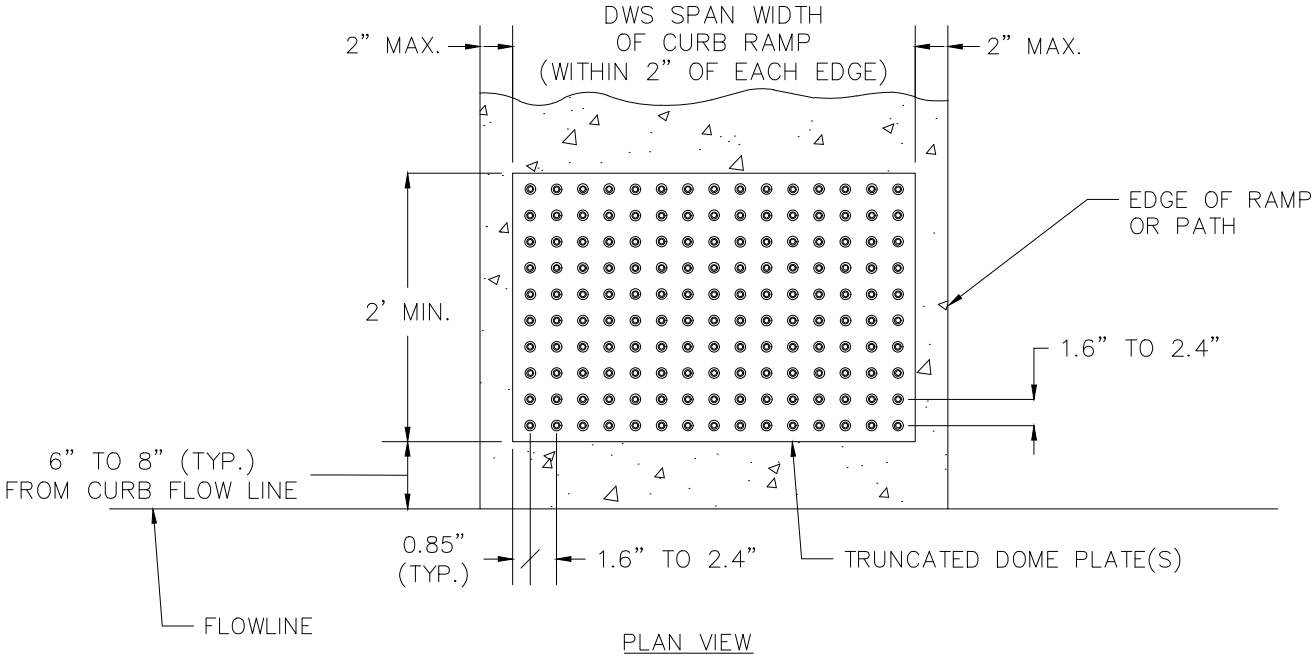

DETECTABLE WARNINGS ON CONCRETE CURB RAMPS

DATE: 08/23/2022	JEFFERSON COUNTY DIVISION of TRANSPORTATION AND ENGINEERING 100 JEFFERSON CNTY. PKWY., SUITE 3500 GOLDEN, CO. 80419 (303) 271-8495
DRAWN BY: S.A.K.	
CHECKED BY: STAFF	DETECTABLE WARNINGS ON CONCRETE CURB RAMPS
SCALE:	
FILE: STND-18	

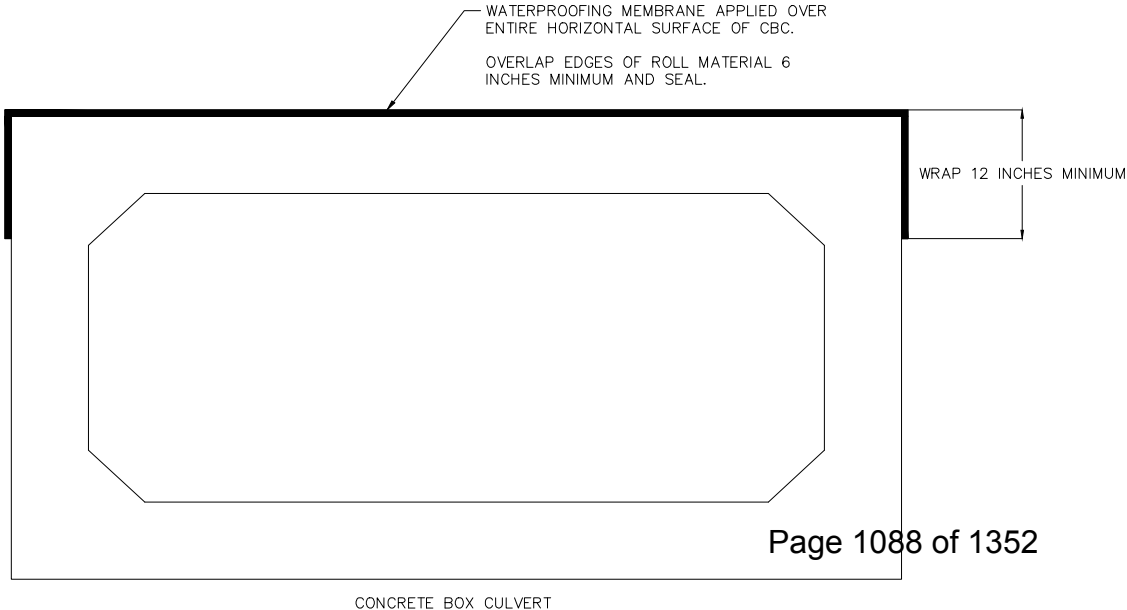
WATERPROOFING MEMBRANE APPLIED OVER ENTIRE HORIZONTAL SURFACE OF CBC.
OVERLAP EDGES OF ROLL MATERIAL 6 INCHES MINIMUM AND SEAL.
WRAP 12 INCHES MINIMUM
CONCRETE BOX CULVERT

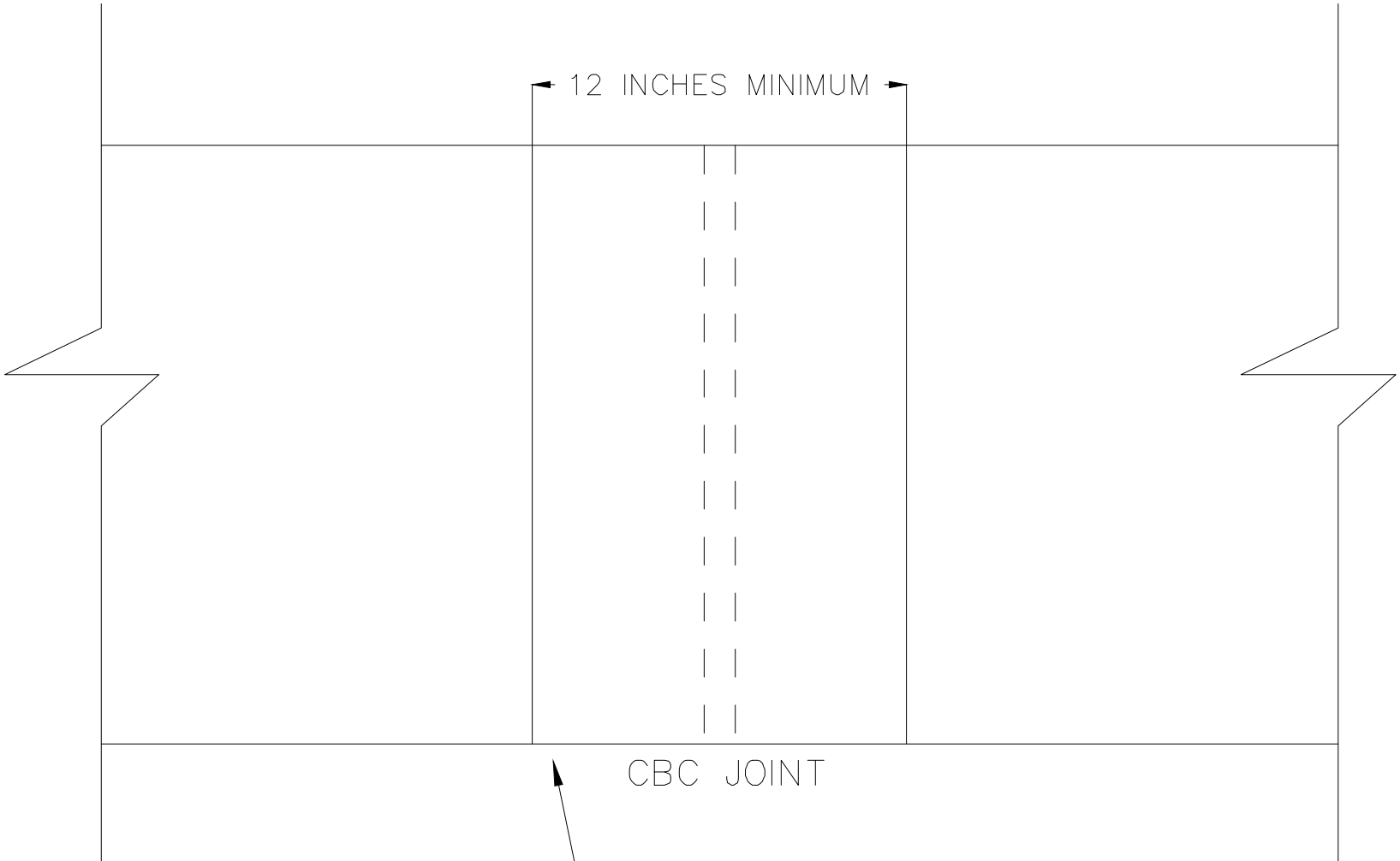

SEAL VERTICAL JOINTS WITH WATERPROOFING MEMBRANE OR SELF ADHESIVE ROLL MATERIAL.

JOINTS ARE SEALED ENTIRE HEIGHT OF CBC AND ON OUTSIDE CBC SECTIONS.

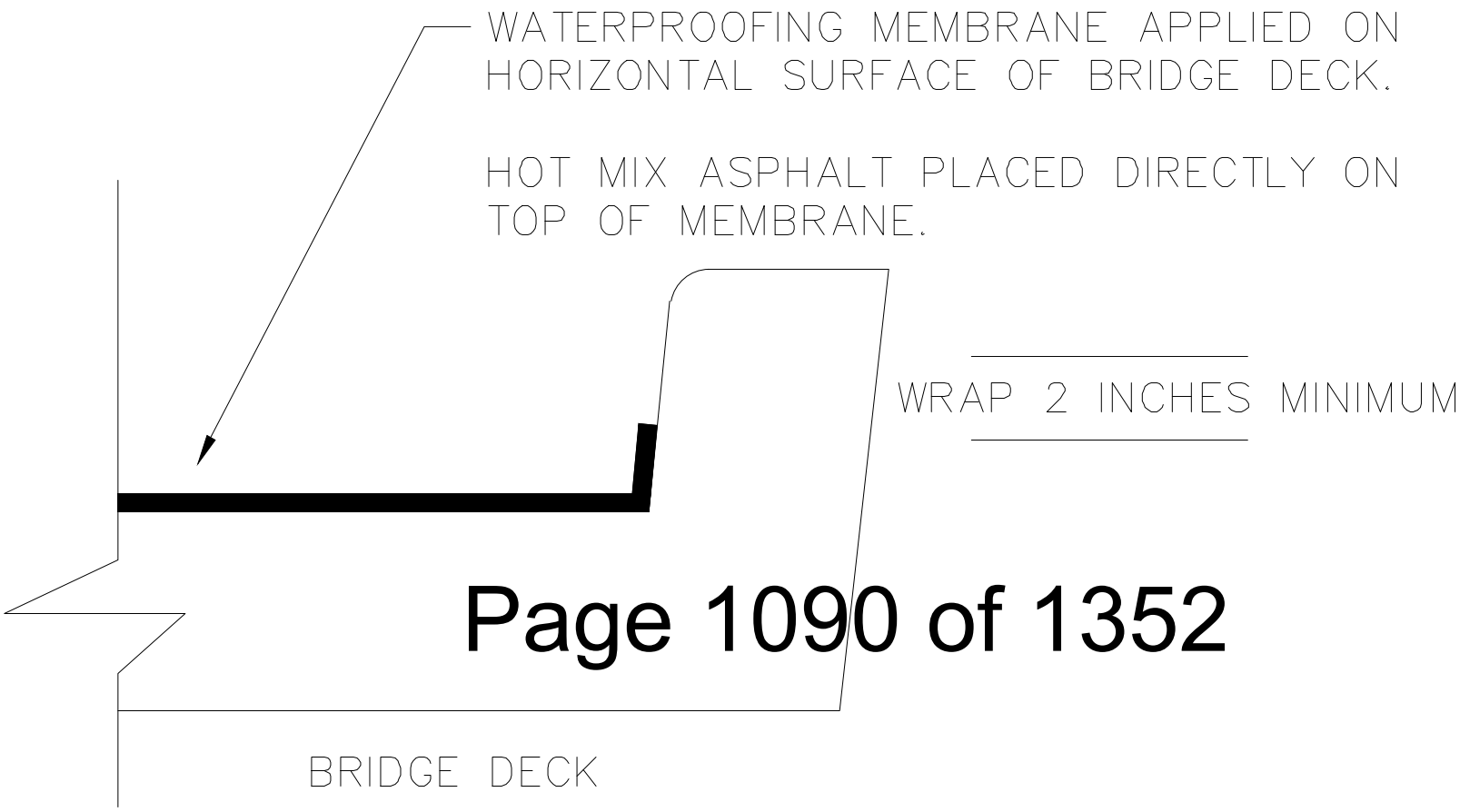
WATERPROOFING MEMBRANE APPLIED ON HORIZONTAL SURFACE OF BRIDGE DECK.
HOT MIX ASPHALT PLACED DIRECTLY ON TOP OF MEMBRANE.
WRAP 2 INCHES MINIMUM
BRIDGE DECK

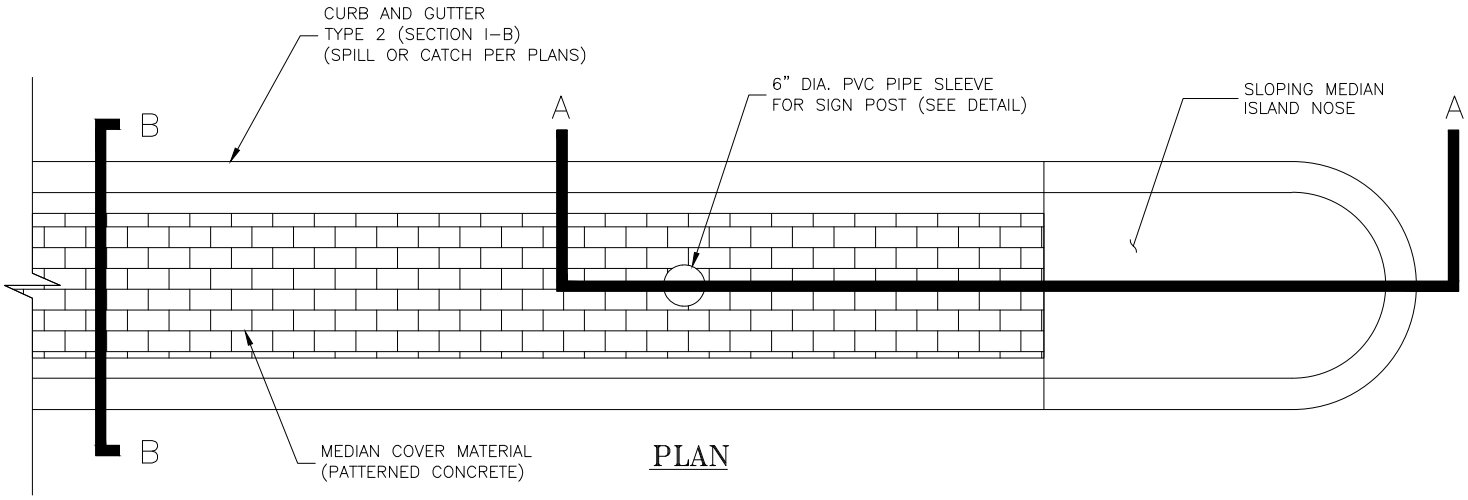

PLAN

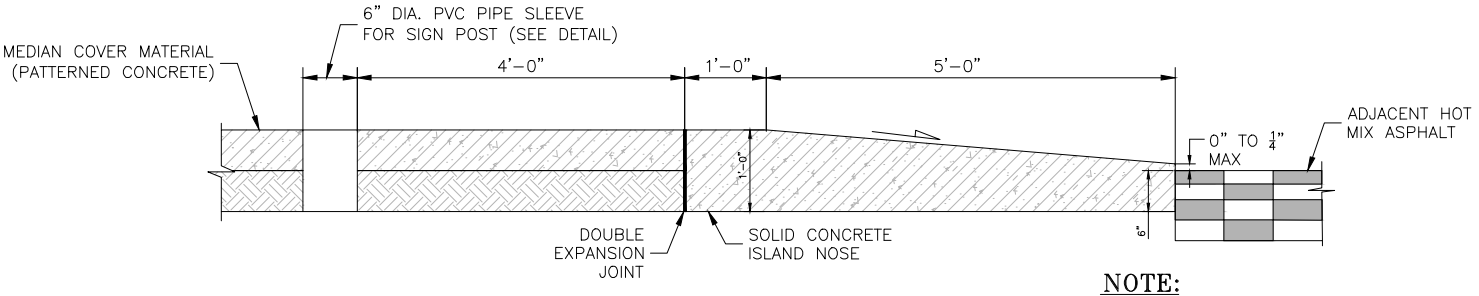

CROSS SECTION MEDIAN
COVER MATERIAL SECTION A–A

NOTE:

– THE RISE AT GUTTER FLOWLINE SHALL BE 1/4" MAXIMUM, JUST ENOUGH FOR WATER TO RUN AROUND THE MEDIAN NOSE IF NEEDED.

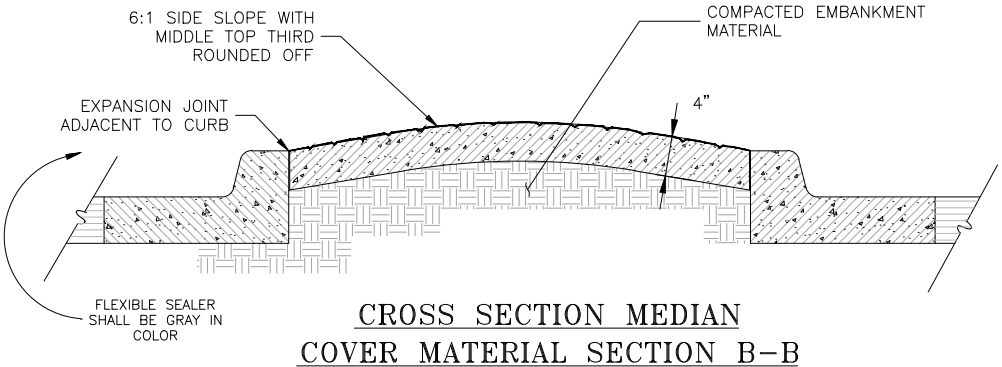

CROSS SECTION MEDIAN
COVER MATERIAL SECTION B–B

MEDIAN COVER MATERIAL
PATTERNED CONCRETE

DATE: 08/23/2022	JEFFERSON COUNTY DIVISION of TRANSPORTATION AND ENGINEERING 100 JEFFERSON CNTY. PKWY., SUITE 3500 GOLDEN, CO. 80419 (303) 271–8495
DRAWN BY: S.A.K.	
CHECKED BY: STAFF	MEDIAN COVER MATERIAL PATTERNED CONCRETE
SCALE:	
FILE: STND–20	

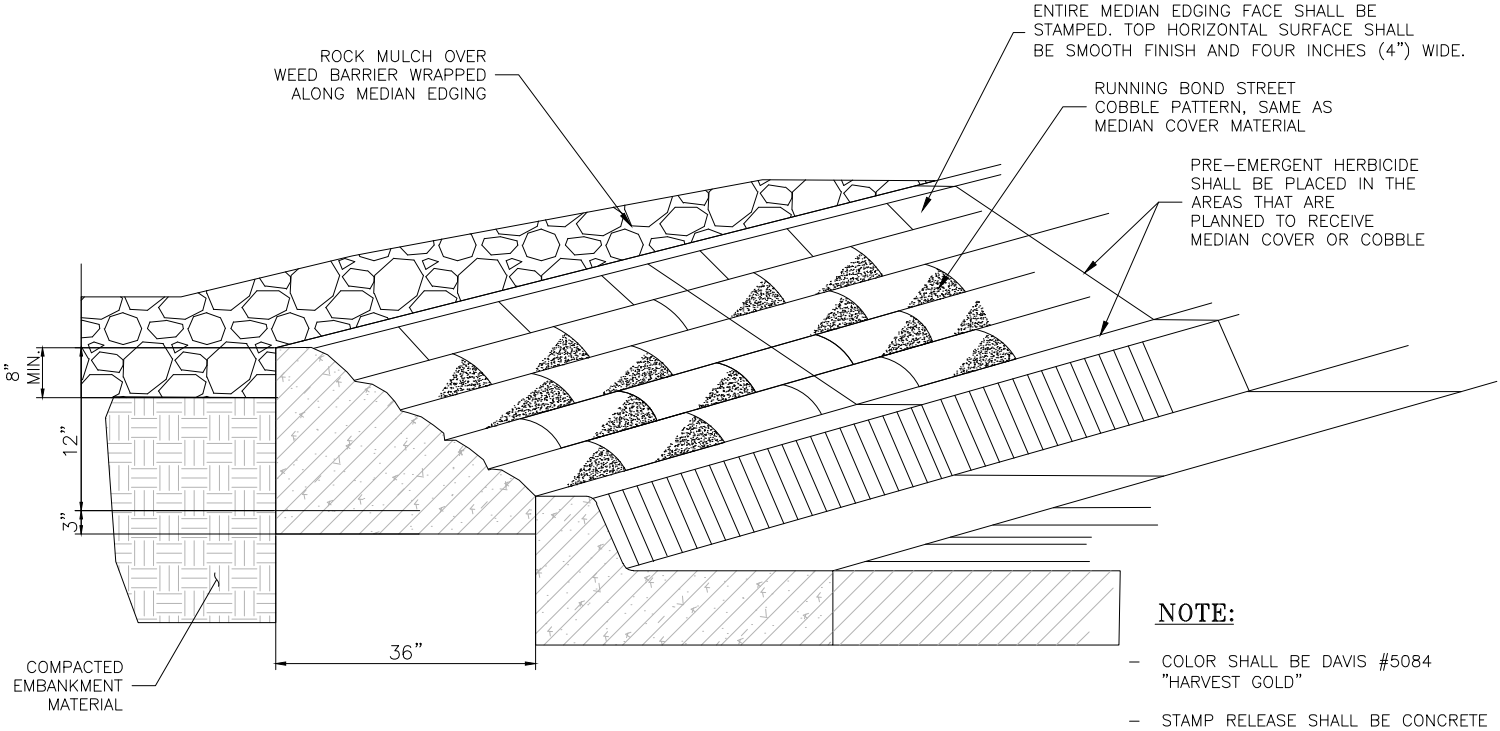

NOTE:

- COLOR SHALL BE DAVIS #5084 "HARVEST GOLD"
- STAMP RELEASE SHALL BE CONCRETE COATINGS STAMP-TEK LIQUID RELEASE
- CONCRETE STAMP PATTERN SHALL BE UK COBBLESTONE. CONCRETE SHALL BE SEALED WITH SPECCHEM CURESHIELD EX.
- CLEAR SEALER SHALL BE APPLIED ONCE LIQUID RELEASE HAS FULLY EVAPORATED.

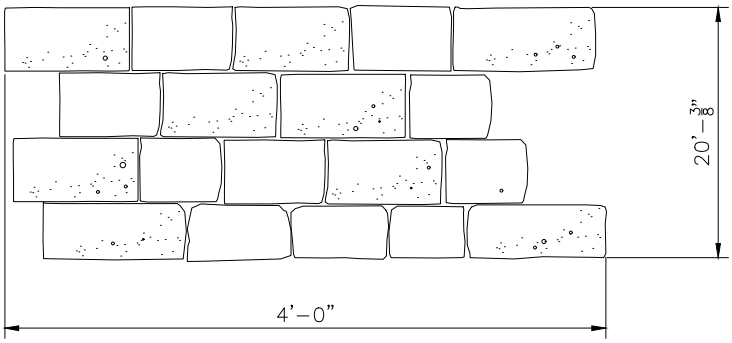

NOTE:

- SAWCUT CONTROL JOINTS SHALL BE PLACED EVERY TEN (10) LINEAR FEET, $\frac{1}{4}$ THE THICKNESS OF THE CONCRETE.
- EXPANSION JOINTS SHALL BE PLACED EVERY 100 LINEAR FEET.
- EXPANSION JOINTS SHALL HAVE A ZIP STRIP (SNAP-CAP) AND CURE SEALER (SIKAFLEX-2C) APPLIED. CURE SEALER FOR EXPANSION JOINTS IN THE PATTERNED CONCRETE SHALL BE TAN.

MEDIAN EDGING
PATTERNED CONCRETE

DATE: 08/23/2022	JEFFERSON COUNTY DIVISION of TRANSPORTATION AND ENGINEERING 100 JEFFERSON CNTY. PKWY., SUITE 3500 GOLDEN, CO. 80419 (303) 271-8495
DRAWN BY: S.A.K.	
CHECKED BY: STAFF	
SCALE:	MEDIAN EDGING PATTERNED CONCRETE
FILE: STND-21	

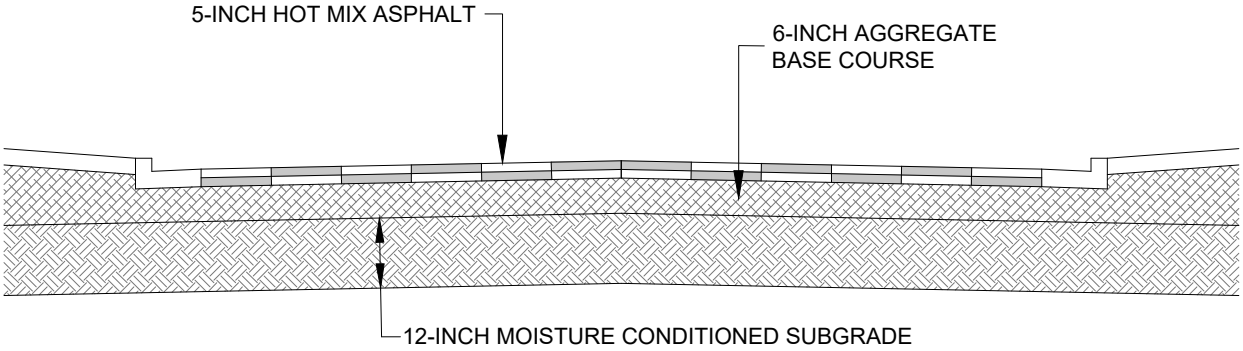

ZONE 1:
FOOTHILLS/MOUNTAIN AREA
PRELIMINARY PAVEMENT DESIGN

DATE: 08/23/2022	JEFFERSON COUNTY DIVISION. of TRANSPORTATION & ENGINEERING 100 JEFFERSON CNTY. PKWY., SUITE 3500 GOLDEN, CO. 80419 (303) 271-8419
DRAWN BY: S.A.K.	
CHECKED BY: STAFF	ZONE 1 FOOTHILLS/MOUNTAIN AREA PRELIMINARY PAVEMENT DESIGN
SCALE:	
FILE: STND-22	

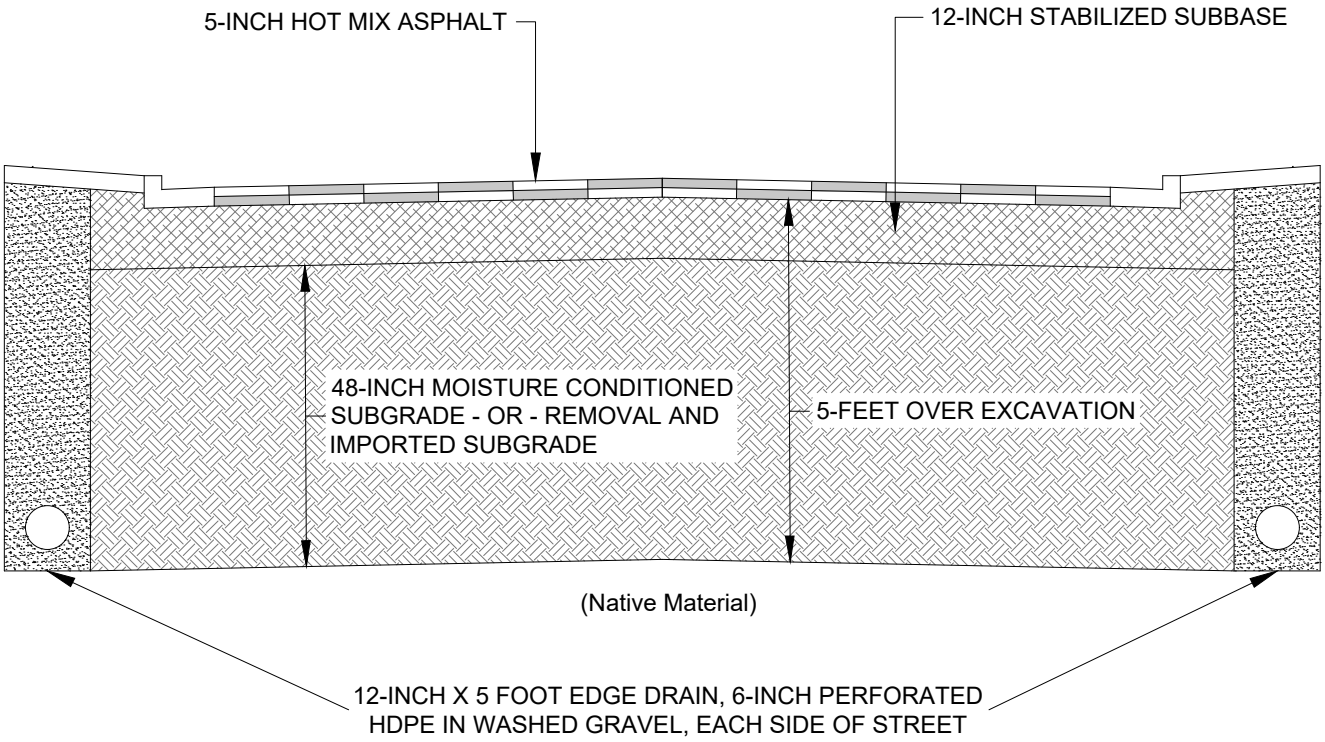

ZONE 2:
DIPPING BEDROCK AREA
PRELIMINARY PAVEMENT DESIGN

DATE: 08/23/2022	JEFFERSON COUNTY DIVISION. of TRANSPORTATION & ENGINEERING 100 JEFFERSON CNTY. PKWY., SUITE 3500 GOLDEN, CO. 80419 (303) 271-8419
DRAWN BY: S.A.K.	
CHECKED BY: STAFF	ZONE 2 DIPPING BEDROCK AREA PRELIMINARY PAVEMENT DESIGN
SCALE:	
FILE: STND-23	

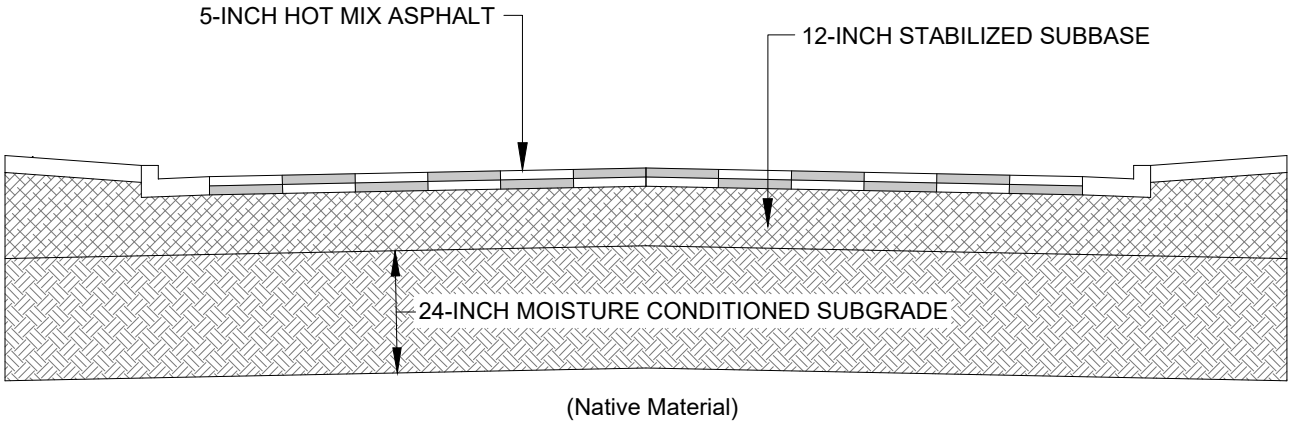

ZONE 3:
FRONT RANGE AREA
PRELIMINARY PAVEMENT DESIGN

DATE: 08/23/2022	JEFFERSON COUNTY DIVISION. of TRANSPORTATION & ENGINEERING 100 JEFFERSON CNTY. PKWY., SUITE 3500 GOLDEN, CO. 80419 (303) 271-8419
DRAWN BY: S.A.K.	
CHECKED BY: STAFF	ZONE 3 FRONT RANGE AREA PRELIMINARY PAVEMENT DESIGN
SCALE:	
FILE: STND-24	

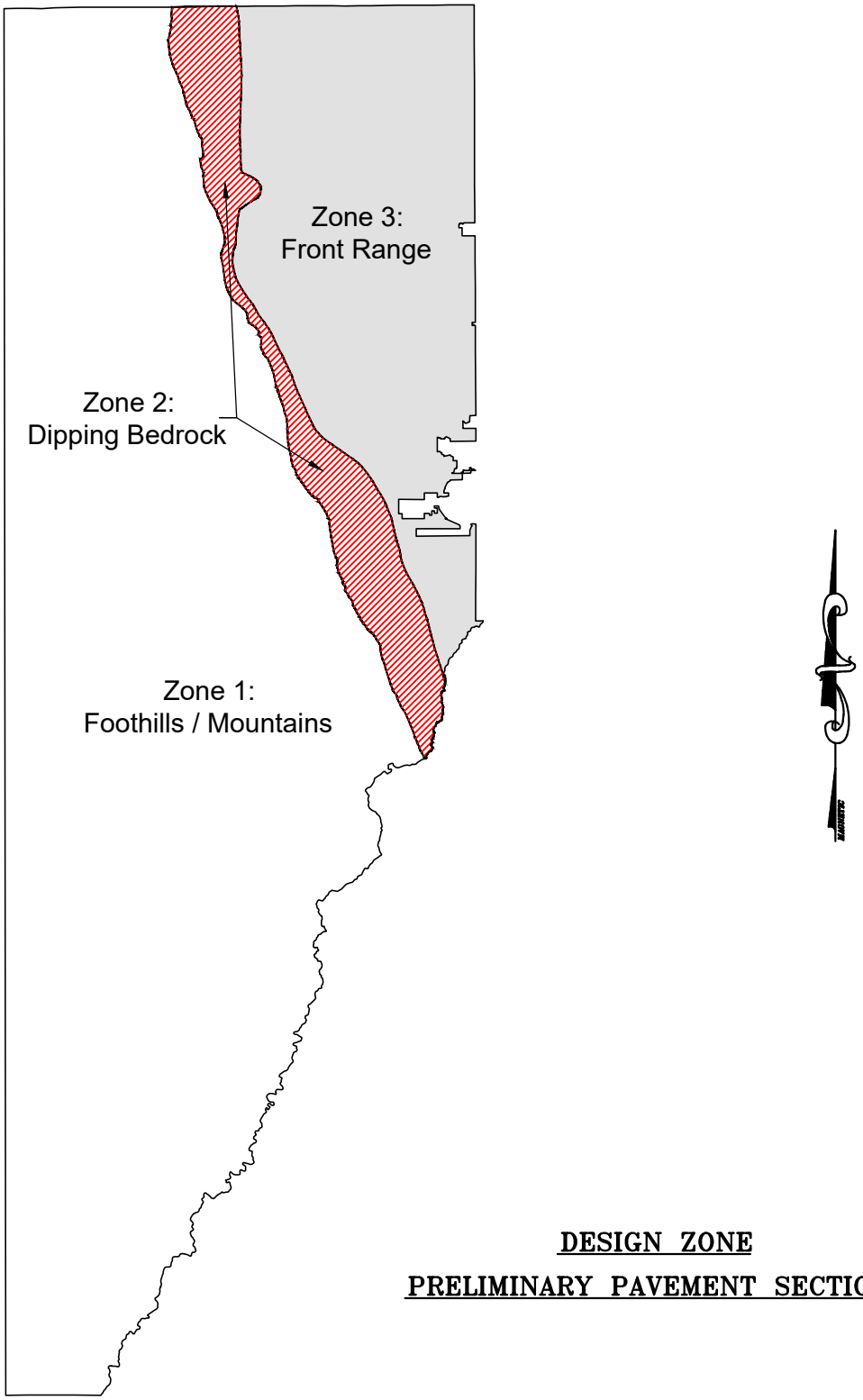

DESIGN ZONE

PRELIMINARY PAVEMENT SECTIONS

DATE: 08/23/2022	JEFFERSON COUNTY DIVISION. of TRANSPORTATION & ENGINEERING 100 JEFFERSON CNTY. PKWY., SUITE 3500 GOLDEN, CO. 80419 (303) 271-8419
DRAWN BY: S.A.K.	
CHECKED BY: STAFF	DESIGN ZONE PRELIMINARY PAVEMENT SECTIONS
SCALE:	
FILE: STND-25	

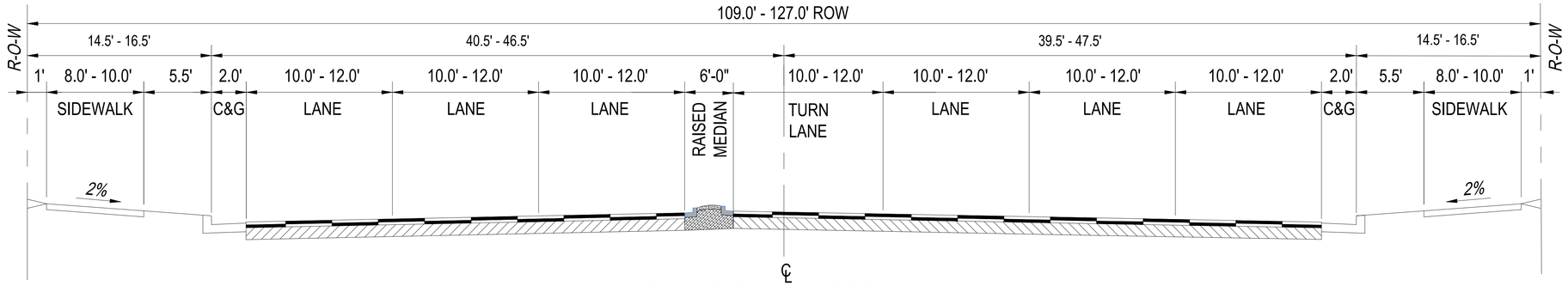

PRINCIPAL ARTERIAL

NOTES

1. THIS TEMPLATE SHALL BE USED WHERE THE DESIGN ADT IS GREATER THAN 25,000.

Sidewalk and lane widths shall be coordinated with Planning and Zoning and Transportation and Engineering

2. INTERSECTION DESIGN AND ACCESS POINTS SHALL BE APPROVED BY THE JEFFERSON COUNTY PLANNING & ZONING.
3. ACCELERATION/DECELERATION LANES AND/OR TURN LANES MAY BE REQUIRED AND MAY NECESSITATE ADDITIONAL RIGHT-OF-WAY. SEE SECTION 3.7.3.
4. MEDIANS MAY BE RAISED, DEPRESSED, OR PAINTED AS APPROVED BY THE JEFFERSON COUNTY PLANNING & ZONING. SEE STANDARD NO. 9 FOR TYPICAL MEDIAN DESIGNS.
5. BICYCLES LANES ARE REQUIRED FOR STREETS IDENTIFIED WITH THE DESIGNATION 'PROPOSED BIKE LANES' IN THE JEFFERSON COUNTY BICYCLE PLAN OR ANY SUBSEQUENT PLAN THAT HAS BEEN APPROVED BY THE BOARD OF COUNTY COMMISSIONERS.
6. ~~BIKE LANES MAY EXCEED 6' IF THEY INCLUDED A 1' - 3' BUFFER, WITH A MAXIMUM COMBINED BUFFER AND BIKE LANE WIDTH OF 9'~~

For a sidewalk to be a shared use it needs to be a minimum of 10 feet. In areas where there is an existing bike lane the sidewalk can be 8 feet.

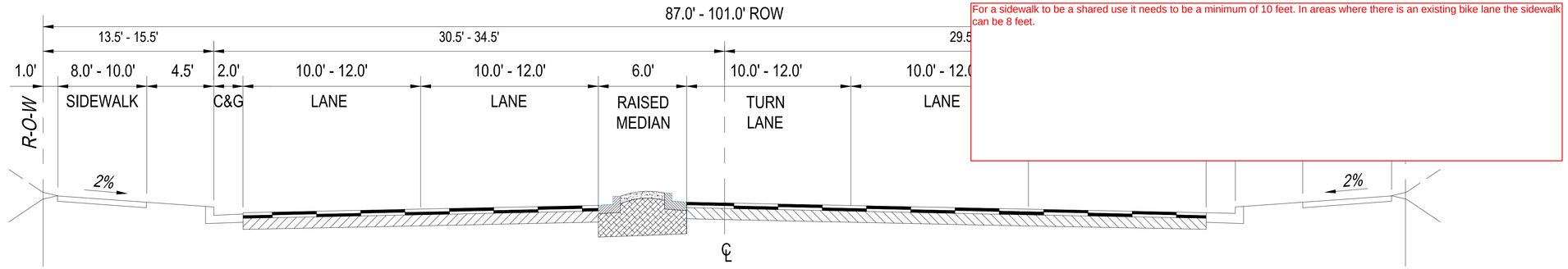

MINOR ARTERIAL

NOTES

1. THIS TEMPLATE SHALL BE USED WHERE THE DESIGN ADT IS GREATER THAN 15,000 BUT LESS THAN 25,000.
2. INTERSECTION DESIGN AND ACCESS POINTS SHALL BE APPROVED BY THE JEFFERSON COUNTY DEPARTMENT OF PLANNING & ZONING.
3. ACCELERATION/DECELERATION LANES AND/OR TURN LANES MAY BE REQUIRED AND MAY NECESSITATE ADDITIONAL RIGHT-OF-WAY. SEE SECTION 3.7.3.
4. MEDIANS MAY BE RAISED, DEPRESSED, OR PAINTED AS APPROVED BY THE JEFFERSON COUNTY PLANNING & ZONING. SEE STANDARD NO. 9 FOR TYPICAL MEDIAN DESIGNS.
5. BICYCLES LANES ARE REQUIRED FOR STREETS IDENTIFIED WITH THE DESIGNATION 'PROPOSED BIKE LANES' IN THE JEFFERSON COUNTY BICYCLE PLAN OR ANY SUBSEQUENT PLAN THAT HAS BEEN APPROVED BY THE BOARD OF COUNTY COMMISSIONERS.
6. ~~BIKE LANES MAY EXCEED 6' IF THEY INCLUDED A 1' - 3' BUFFER, WITH A MAXIMUM COMBINED BUFFER AND BIKE LANE WIDTH OF 9'~~
7. SIDEWALKS MAY BE ATTACHED OR DETACHED AS APPROVED BY JEFFERSON COUNTY PLANNING AND ZONING.

Revisions:	Designed By: STAFF	Scale: (As Shown)	JEFFERSON COUNTY COLORADO — DIVISION OF Transportation and Engineering, 100 JEFFERSON COUNTY PARKWAY, SUITE 3500, GOLDEN, COLORADO 80419, (303) 271-8495
	Drawn By: D.A.M.	Date Created:	TEMPLATES 1 AND 2 JEFFERSON COUNTY
	Checked By: Staff	Plot Date: 8/16/22 F.I.R. Date:	
	File: temp-1-2.dwg	F.O.R. Date: For Const. Date:	Project No.: ---- Sheet 1 Of 1
	File Location: G:_CAD\Standards\Figures\Working		

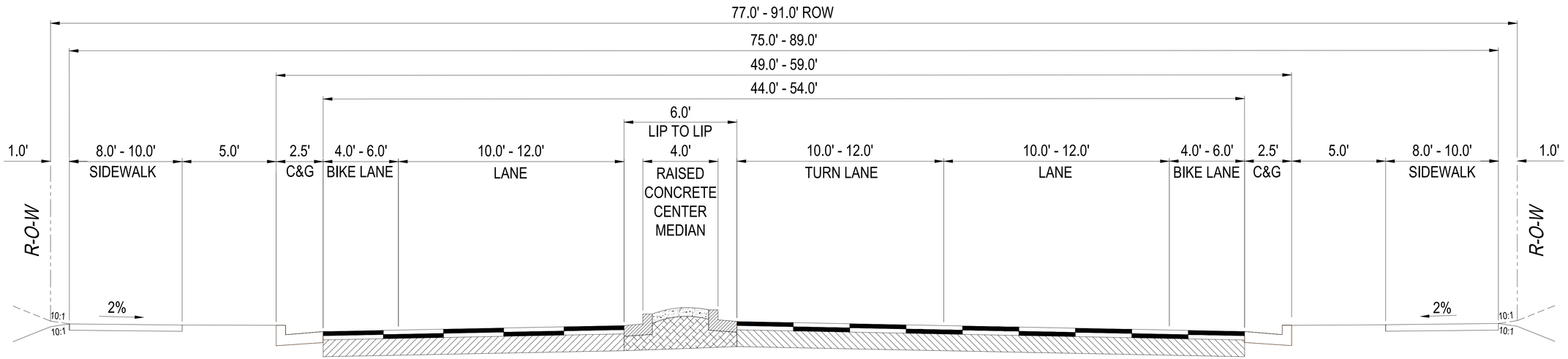

MAJOR COLLECTOR STREET

NOTES

1. THIS TEMPLATE SHALL BE USED WHERE THE DESIGN ADT IS GREATER THAN 8,000 BUT LESS THAN 15,000.
2. ACCESS POINTS SHALL BE APPROVED BY JEFFERSON COUNTY PLANNING & ZONING.
3. MEDIANS MAY BE RAISED, DEPRESSED, OR PAINTED AND WIDTH MAY VARY AS APPROVED BY JEFFERSON COUNTY PLANNING & ZONING. SEE STANDARD NO. 9 FOR TYPICAL MEDIAN DESIGNS.
4. VERTICAL CURB REQUIRED.
5. BICYCLES LANES ARE REQUIRED FOR STREETS IDENTIFIED WITH THE DESIGNATION 'PROPOSED BIKE LANES' IN THE JEFFERSON COUNTY BICYCLE PLAN OR ANY SUBSEQUENT PLAN THAT HAS BEEN APPROVED BY THE BOARD OF COUNTY COMMISSIONERS.
6. BIKE LANES MAY EXCEED 6' IF THEY INCLUDED A 1' - 3' BUFFER, WITH A MAXIMUM COMBINED BUFFER AND BIKE LANE WIDTH OF 9'

Add a note that the sidewalk can be attached or detached.

Revisions:	Designed By: STAFF	Scale: (As Shown)	JEFFERSON COUNTY COLORADO — DIVISION OF Transportation and Engineering, 100 JEFFERSON COUNTY PARKWAY, SUITE 3500, GOLDEN, COLORADO 80419, (303) 271-8495
	Drawn By: D.A.M.	Date Created:	MAJOR COLLECTOR STREET
	Checked By: Staff	Plot Date: 8/16/22 F.I.R. Date:	JEFFERSON COUNTY TEMPLATE 3
	File: temp-3.dwg	F.O.R. Date: For Const. Date:	Project No.: ---- Sheet 1 Of 1
	File Location: G:_CAD\Standards\Figures\Working		

None of these typical include parking. Does the County not allow on street parking?

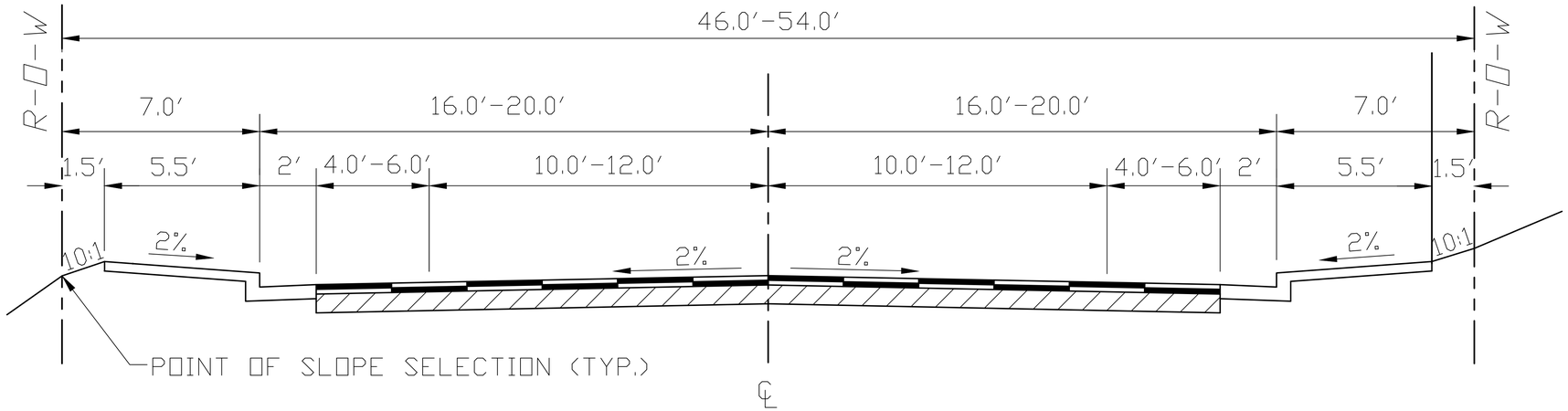

NOTES

1. THIS TEMPLATE SHALL BE USED WHERE THE DESIGN ADT IS GREATER THAN 1,000 BUT LESS THAN 8,000.
2. ACCESS POINTS SHALL BE APPROVED BY THE JEFFERSON COUNTY PLANNING & ZONING.
3. ADDITIONAL RIGHTS-OF-WAY/EASEMENTS MAY BE REQUIRED TO ACCOMMODATE ADDITIONAL PARKING, TURN LANES, CUT AND FILL SLOPES, DRAINAGE STRUCTURES AND MAINTENANCE.
4. VERTICAL CURB REQUIRED.
5. BIKE LANES MAY EXCEED 6′ IF THEY INCLUDED A 1′-3′ BUFFER, WITH A MAXIMUM COMBINED BUFFER AND BIKE LANE WIDTH OF 9′

DATE: 08/16/22	COLLECTOR STREET (36′ ℄ TO ℄) WITH ATTACHED SIDEWALKS	JEFFERSON COUNTY DIVISION of TRANSPORTATION AND ENGINEERING 100 JEFFERSON CNTY. PKWY., SUITE 3500 GOLDEN, CO. 80419 (303) 271-8495
SCALE:		
Drawn By: S.A.K.		
Designed By: STAFF		
FILE: TEMP-4		

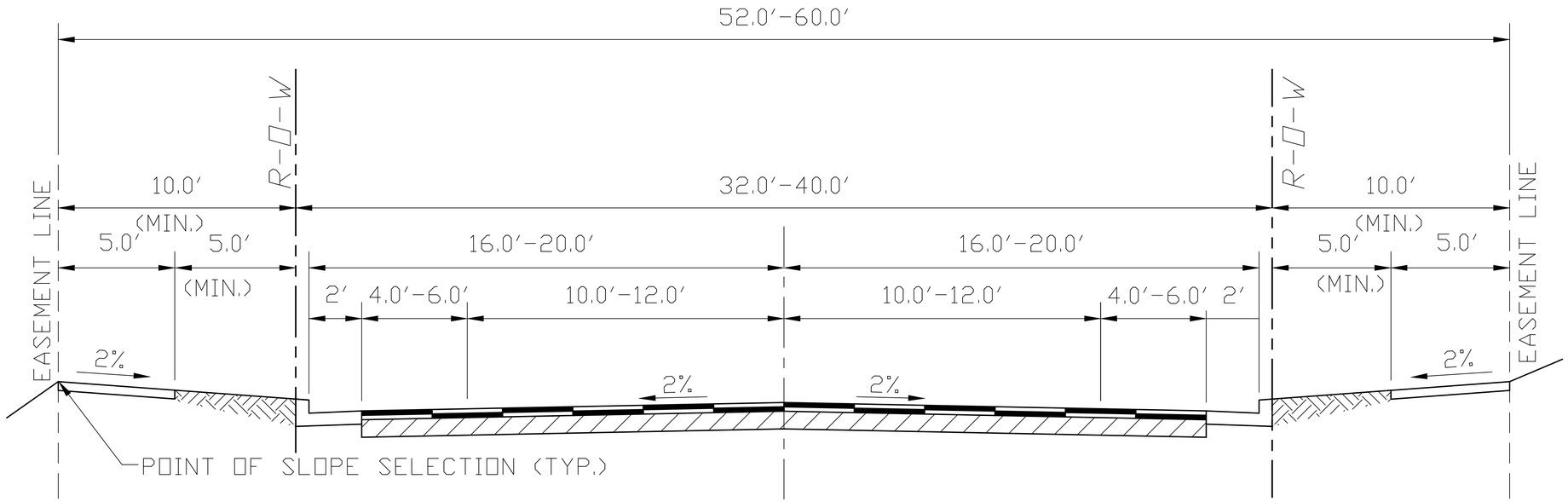

NOTES

1. THIS TEMPLATE SHALL BE USED WHERE THE DESIGN ADT IS GREATER THAN 1,000 BUT LESS THAN 8,000.
2. ACCESS POINTS SHALL BE APPROVED BY THE JEFFERSON COUNTY DEPARTMENT OF PLANNING & ZONING.
3. ADDITIONAL RIGHTS-OF-WAY/EASEMENTS MAY BE REQUIRED TO ACCOMMODATE ADDITIONAL PARKING, TURN LANES, CUT AND FILL SLOPES, DRAINAGE STRUCTURES AND MAINTENANCE.
4. SIDEWALK MAY MEANDER WITHIN EASEMENTS.
5. VERTICAL CURB REQUIRED.
6. BIKE LANES MAY EXCEED 6' IF THEY INCLUDED A 1'-3' BUFFER, WITH A MAXIMUM COMBINED BUFFER AND BIKE LANE WIDTH OF 9'

DATE: 08/16/22	COLLECTOR STREET (36' ℄ TO ℄) WITH DETACHED SIDEWALKS	JEFFERSON COUNTY DIVISION of TRANSPORTATION AND ENGINEERING 100 JEFFERSON CNTY. PKWY., SUITE 3500 GOLDEN, CO. 80419 (303) 271-8495
SCALE:		
Drawn By: S.A.K		
Designed By: STAFF		
FILE: TEMP-5		

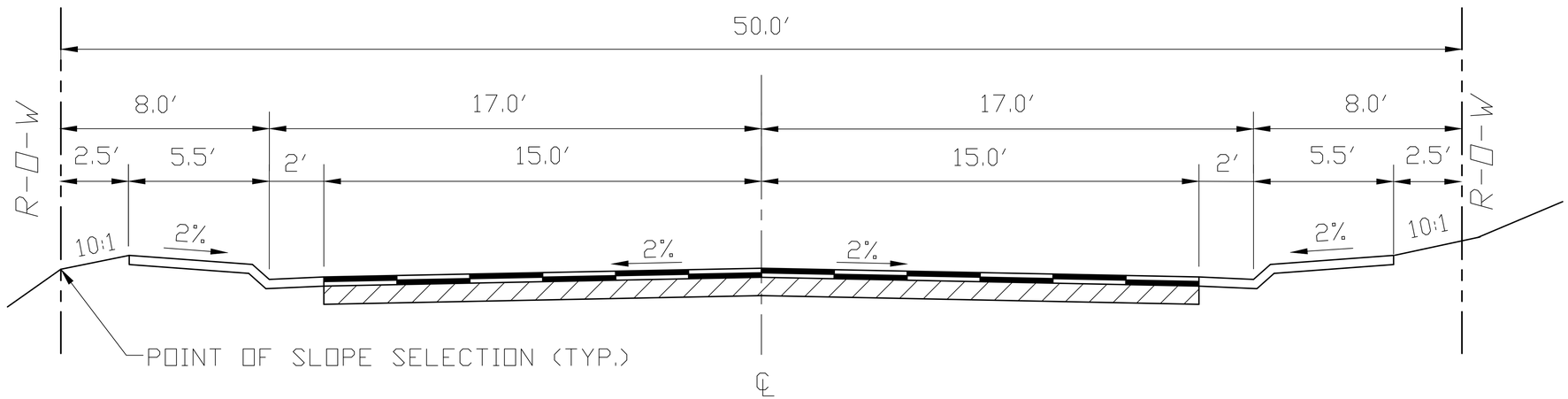

NOTES

1. THIS TEMPLATE SHALL BE USED WHERE THE DESIGN ADT IS LESS THAN 1,000.
2. ADDITIONAL RIGHTS-OF-WAY/EASEMENTS MAY BE REQUIRED FOR CUT AND FILL SLOPES, DRAINAGE STRUCTURES AND MAINTENANCE.
3. MOUNTABLE CURB ALLOWED.

DATE: 01/04/2016	LOCAL STREET (34' ℄ TO ℄) WITH ATTACHED SIDEWALKS	JEFFERSON COUNTY DIVISION of TRANSPORTATION AND ENGINEERING 100 JEFFERSON CNTY. PKWY., SUITE 3500 GOLDEN, CO. 80419 (303) 271-8495
SCALE:		
Drawn By: D.A.M.		
Designed By: STAFF		
FILE: TEMP-6		

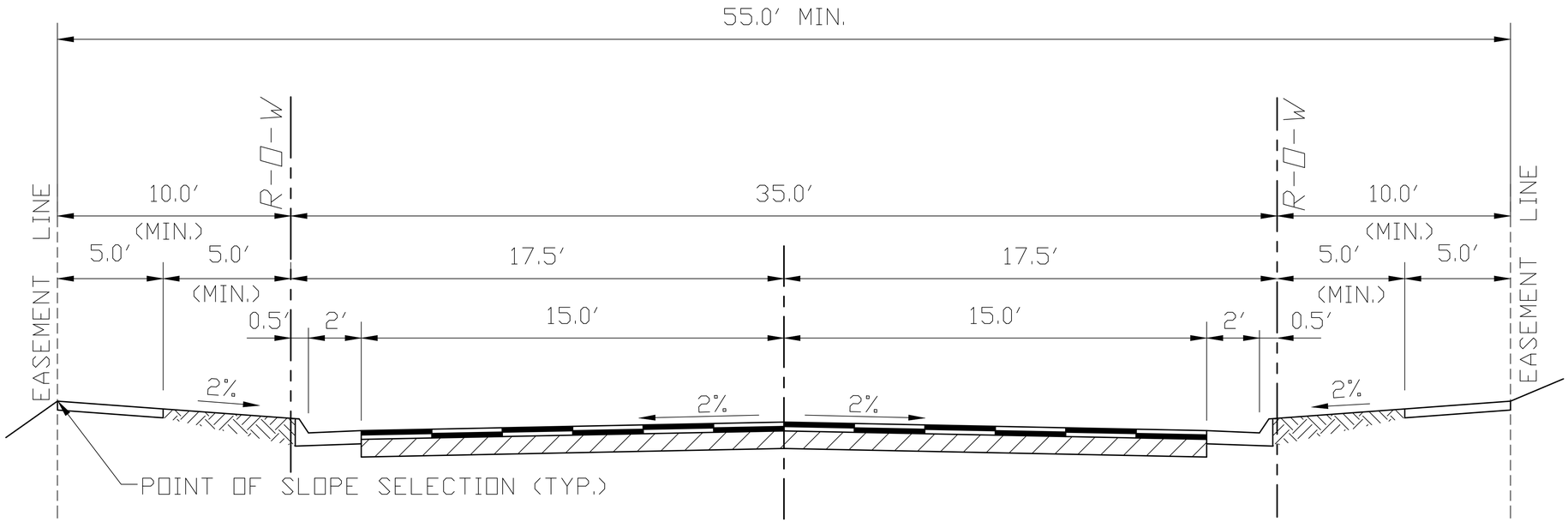

NOTES

1. THIS TEMPLATE SHALL BE USED WHERE THE DESIGN ADT IS LESS THAN 1,000.
2. ADDITIONAL RIGHTS-OF-WAY/EASEMENTS MAY BE REQUIRED FOR CUT AND FILL SLOPES, DRAINAGE STRUCTURES AND MAINTENANCE.
3. MOUNTABLE CURB ALLOWED.

DATE: 01/04/2016	LOCAL STREET (34' ℄ TO ℄) WITH DETACHED SIDEWALKS	JEFFERSON COUNTY DIVISION of TRANSPORTATION AND ENGINEERING 100 JEFFERSON CNTY. PKWY., SUITE 3500 GOLDEN, CO. 80419 (303) 271-8495
SCALE:		
Drawn By: D.A.M.		
Designed By: STAFF		
FILE: TEMP-7		

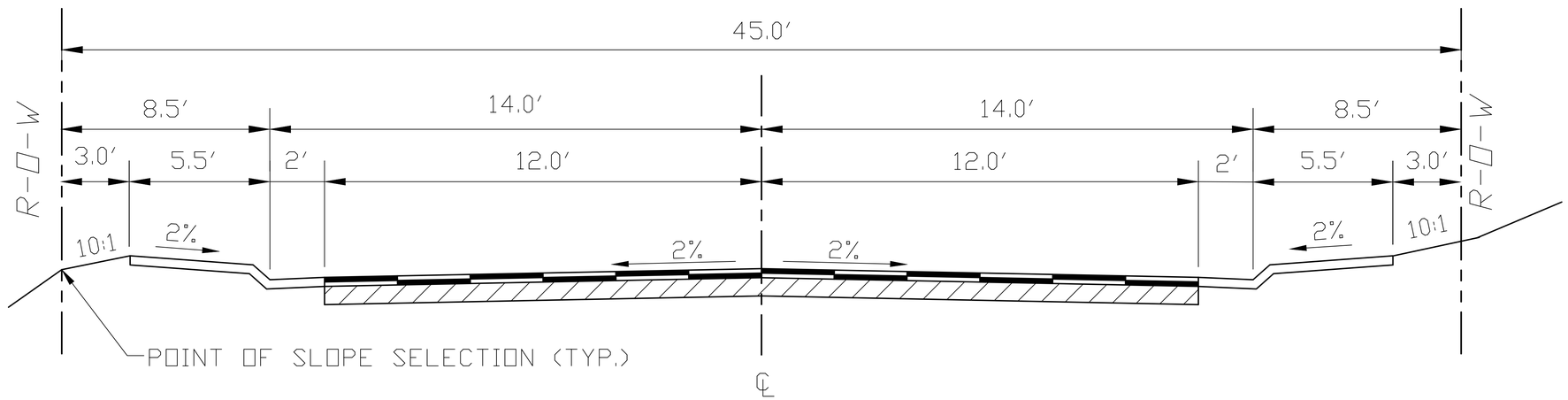

NOTES

1. THIS TEMPLATE MAY BE USED WHERE THE DESIGN ADT IS LESS THAN 350 SUBJECT TO APPROVAL BY PLANNING AND ZONING BASED ON SAFETY AND TRAFFIC OPERATIONS AND SPECIFIC SITE CONDITIONS.
2. A MINIMUM OF FOUR OFF-STREET PARKING SPACES PER DWELLING UNIT IS REQUIRED.
3. ADDITIONAL RIGHTS-OF-WAY/EASEMENTS MAY BE REQUIRED FOR CUT AND FILL SLOPES, DRAINAGE STRUCTURES AND MAINTENANCE.
4. ON STREET PARKING IS NOT PERMITTED.
5. MOUNTABLE CURB ALLOWED.

DATE: 01/04/2016	LOCAL STREET (28' ℄ TO ℄) WITH ATTACHED SIDEWALKS	JEFFERSON COUNTY DIVISIION of TRANSPORTATION AND ENGINEERING 100 JEFFERSON CNTY. PKWY., SUITE 3500 GOLDEN, CO. 80419 (303) 271-8495
SCALE:		
Drawn By: D.A.M.		
Designed By: STAFF		
FILE: TEMP-8		

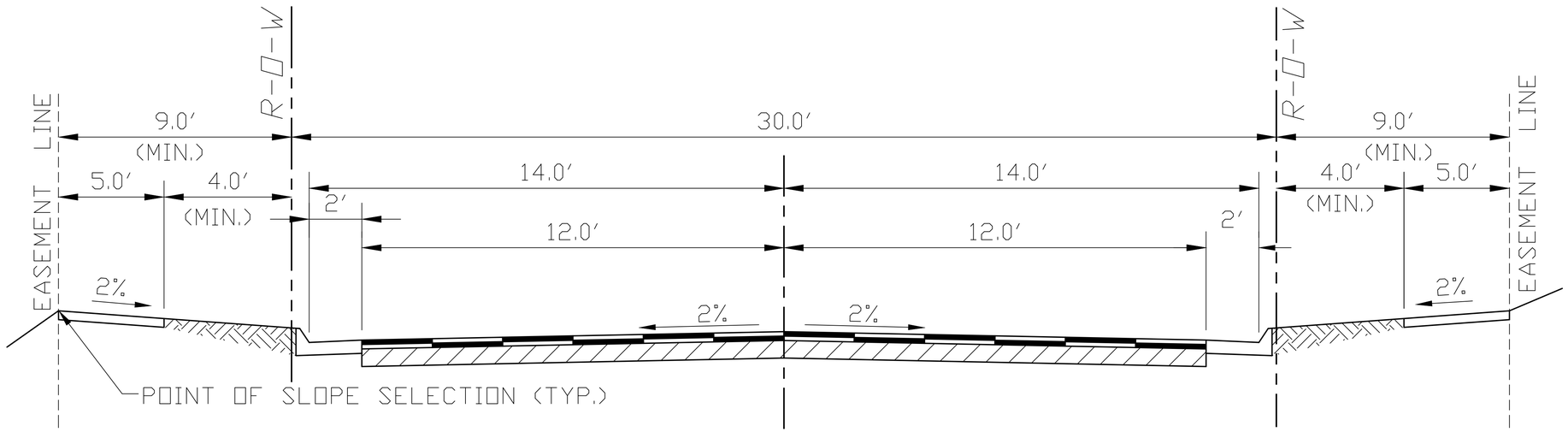

NOTES

1. THIS TEMPLATE MAY BE USED WHERE THE DESIGN ADT IS LESS THAN 350 SUBJECT TO APPROVAL BY PLANNING AND ZONING BASED ON SAFETY AND TRAFFIC OPERATIONS AND SPECIFIC SITE CONDITIONS.
2. A MINIMUM OF FOUR OFF-STREET PARKING SPACES PER DWELLING UNIT IS REQUIRED.
3. ADDITIONAL RIGHTS-OF-WAY/EASEMENTS MAY BE REQUIRED FOR CUT AND FILL SLOPES, DRAINAGE STRUCTURES AND MAINTENANCE.
4. ON STREET PARKING IS NOT PERMITTED.
5. VERTICAL CURB REQUIRED.

DATE: 01/04/2016	LOCAL STREET (28' ℄ TO ℄) WITH DETACHED SIDEWALKS	JEFFERSON COUNTY DIVISION of TRANSPORTATION AND ENGINEERING 100 JEFFERSON CNTY. PKWY., SUITE 3500 GOLDEN, CO. 80419 (303) 271-8495
SCALE:		
Drawn By: D.A.M.		
Designed By: STAFF		
FILE: TEMP-9		

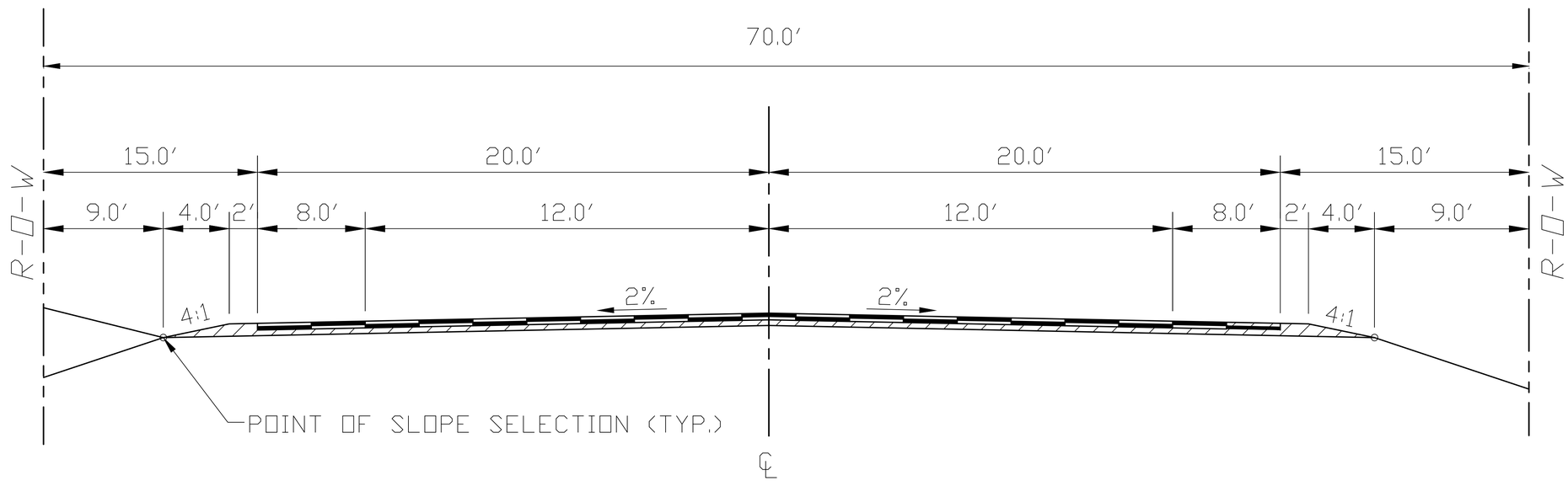

NOTES

1. THIS TEMPLATE SHALL BE USED WHERE THE DESIGN ADT IS GREATER THAN 8,000.

2. INTERSECTION DESIGN AND ACCESS POINTS SHALL BE APPROVED BY JEFFERSON COUNTY PLANNING & ZONING. ACCELERATION/DECELERATION, LEFT TURN AND/OR CLIMBING LANES MAY BE REQUIRED AND WILL NECESSITATE ADDITIONAL RIGHT-OF-WAY.

3. ADDITIONAL RIGHTS-OF-WAY/EASEMENTS MAY BE REQUIRED FOR CUT AND FILL SLOPES, DRAINAGE STRUCTURES AND MAINTENANCE.

4. GUARDRAIL MAY BE REQUIRED DEPENDING ON FILL SLOPE HEIGHT/SLOPE AND/OR PRESENCE OF OTHER HAZARDS. SEE SECTION 3.10.1.

DATE: 09/25/2017	MINOR ARTERIAL ROAD	JEFFERSON COUNTY DIVISION of TRANSPORTATION AND ENGINEERING 100 JEFFERSON CNTY. PKWY., SUITE 3500 GOLDEN, CO. 80419 (303) 271-8495
SCALE:		
Drawn By: D.A.M.		
Designed By: STAFF		
FILE: TEMP-10		

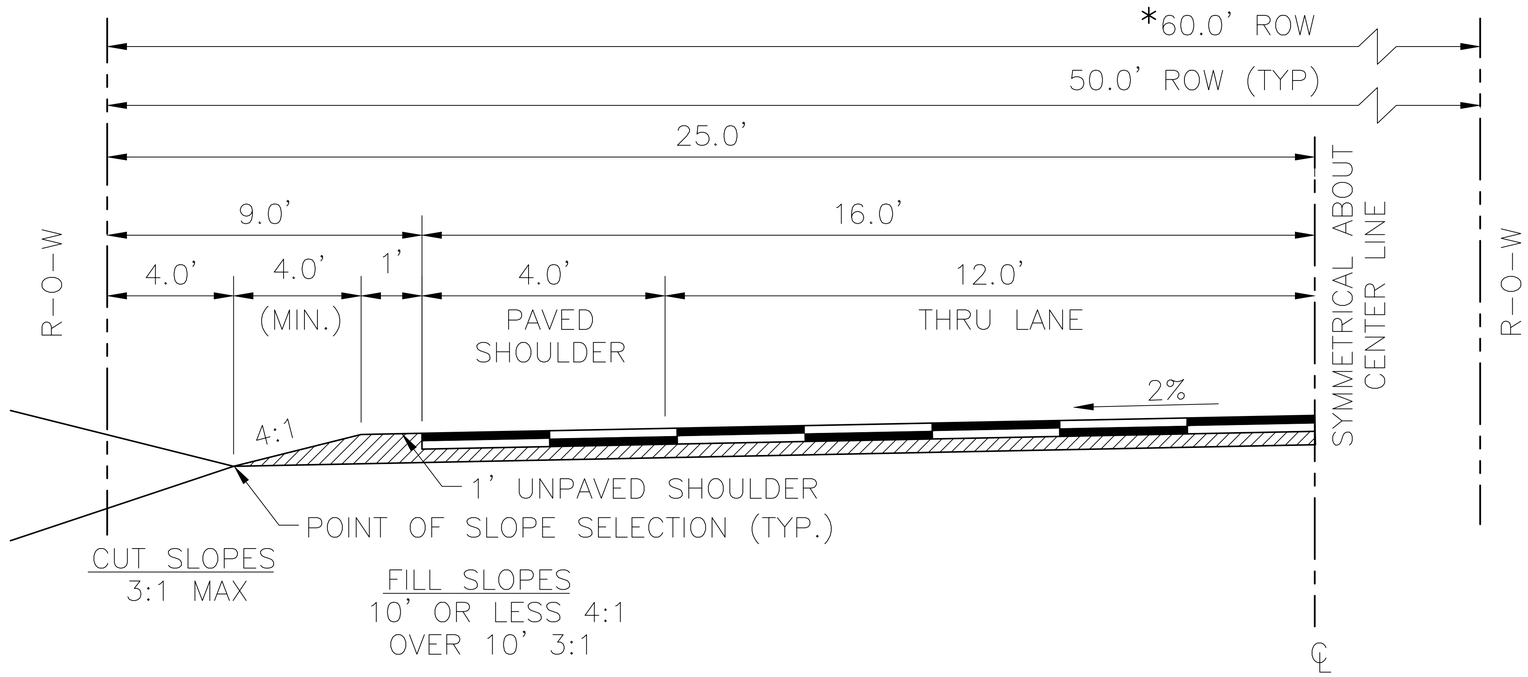

NOTES

1. THIS TEMPLATE SHALL BE USED WHERE THE DESIGN ADT IS GREATER THAN 2,000 BUT LESS THAN 8,000.

*2. INTERSECTION DESIGN AND ACCESS POINTS SHALL BE APPROVED BY JEFFERSON COUNTY PLANNING & ZONING. ACCELERATION/DECELERATION, LEFT TURN AND/OR CLIMBING LANES MAY BE REQUIRED AND WILL NECESSITATE ADDITIONAL RIGHT-OF-WAY.

3. ADDITIONAL RIGHTS-OF-WAY/EASEMENTS MAY BE REQUIRED FOR CUT AND FILL SLOPES, DRAINAGE STRUCTURES AND MAINTENANCE.

4. GUARDRAIL MAY BE REQUIRED DEPENDING ON FILL SLOPE HEIGHT/SLOPE AND/OR PRESENCE OF OTHER HAZARDS. SEE SECTION 3.10.1.

DATE: 09/25/2017	MAJOR COLLECTOR ROAD	JEFFERSON COUNTY DIVISION of TRANSPORTATION and ENGINEERING 100 JEFFERSON CNTY. PKWY., SUITE 3500 GOLDEN, CO. 80419 (303) 271-8495
SCALE:		
Drawn By: D.A.M.		
Designed By: STAFF		
FILE: TEMP-11		

G:_CAD\Standards\Road-Templates\temp-11-NEW.dwg

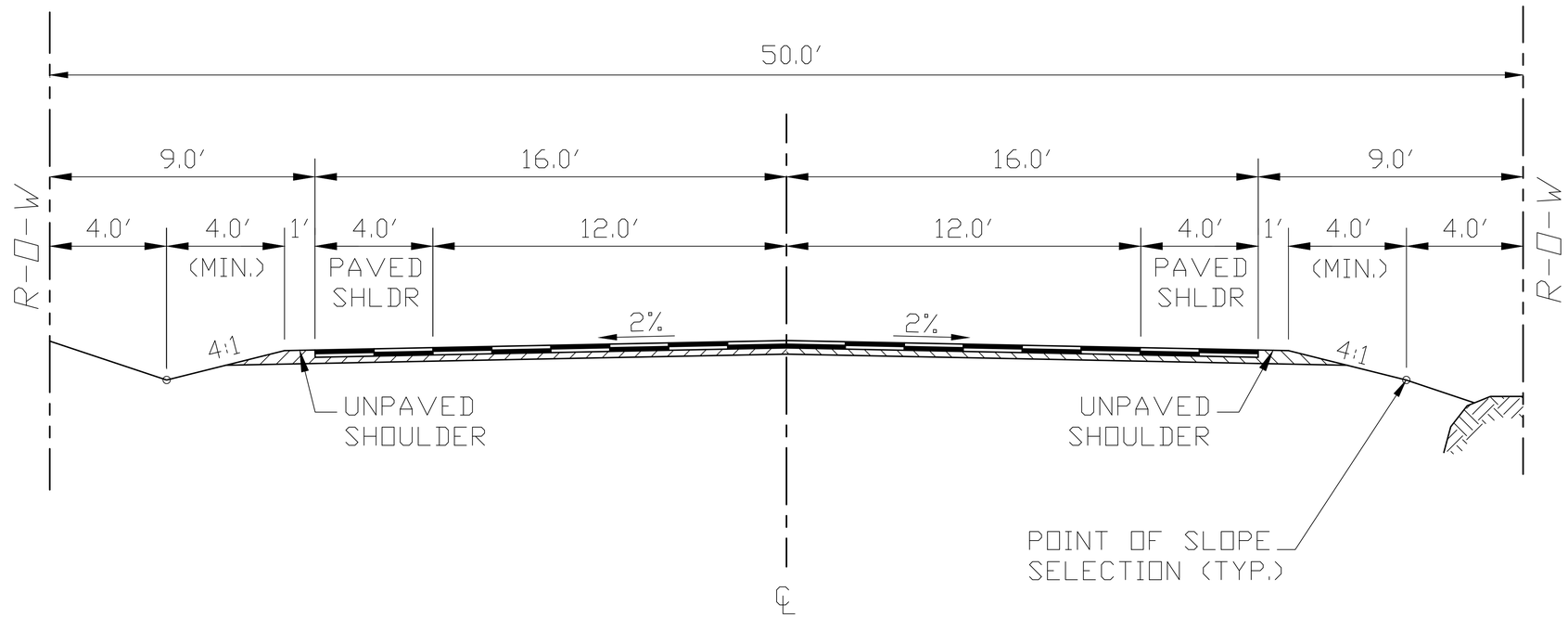

NOTES

1. THIS TEMPLATE SHALL BE USED WHERE THE DESIGN ADT IS GREATER THAN 1,000 BUT LESS THAN 2,000.
2. ACCESS POINTS SHALL BE APPROVED BY THE JEFFERSON COUNTY PLANNING & ZONING.
3. ADDITIONAL RIGHTS-OF-WAY/EASEMENTS MAY BE REQUIRED FOR CUT AND FILL SLOPES, DRAINAGE STRUCTURES AND MAINTENANCE.
4. GUARDRAIL MAY BE REQUIRED DEPENDING ON FILL SLOPE HEIGHT/SLOPE AND/OR PRESENCE OF OTHER HAZARDS. SEE SECTION 3.10.1.

DATE: 09/25/2017	COLLECTOR ROAD	JEFFERSON COUNTY DIVISION of TRANSPORTATION AND ENGINEERING 100 JEFFERSON CNTY. PKWY., SUITE 3500 GOLDEN, CO. 80419 (303) 271-8495
SCALE:		
Drawn By: D.A.M.		
Designed By: STAFF		
FILE: TEMP-12		

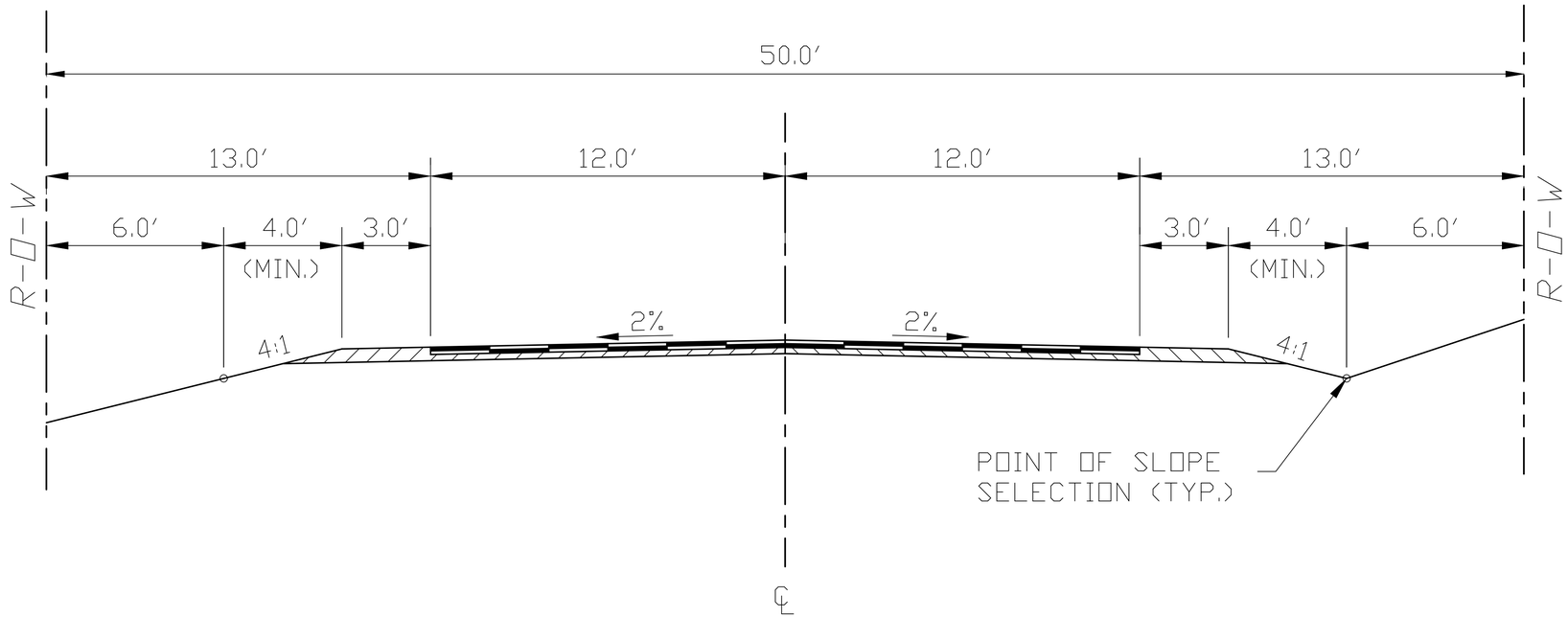

NOTES

1. THIS TEMPLATE SHALL BE USED WHERE THE DESIGN ADT IS LESS THAN 1,000.
2. ADDITIONAL RIGHTS-OF-WAY/EASEMENTS MAY BE REQUIRED FOR CUT AND FILL SLOPES, DRAINAGE STRUCTURES AND MAINTENANCE.
3. GUARDRAIL MAY BE REQUIRED DEPENDING ON FILL SLOPE HEIGHT/SLOPE AND/OR PRESENCE OF OTHER HAZARDS. SEE SECTION 3.10.1.

DATE: 09/25/2017	LOCAL ROAD	JEFFERSON COUNTY DIVISION of TRANSPORTATION AND ENGINEERING 100 JEFFERSON CNTY. PKWY., SUITE 3500 GOLDEN, CO. 80419 (303) 271-8495
SCALE:		
Drawn By: D.A.M.		
Designed By: STAFF		
FILE: TEMP-13		

OPTION 1

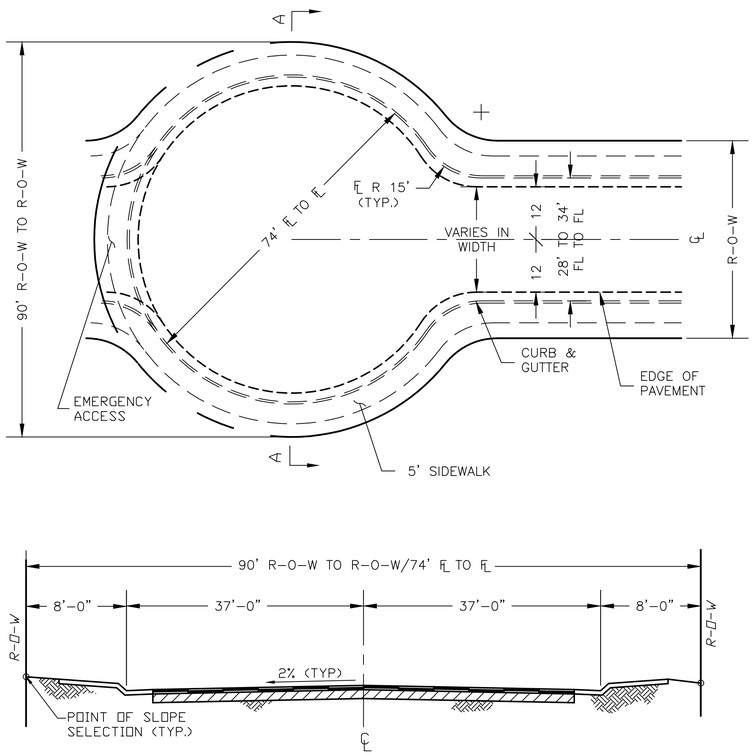

SECTION A – A
74' ℄ to ℄

NOTE:

1. SIDEWALK MAY BE DETACHED AS SHOWN ON TEMPLATES 7 AND 9
2. THE FLOWLINE TO FLOWLINE DISTANCE OF 74' AND ON-STREET PARKING IS ALLOWED IF THERE IS EMERGENCY ACCESS CONNECTED TO THE CUL-DE-SAC THAT IS ACCEPTABLE TO THE APPROPRIATE FIRE PROTECTION DISTRICT.

OPTION 2

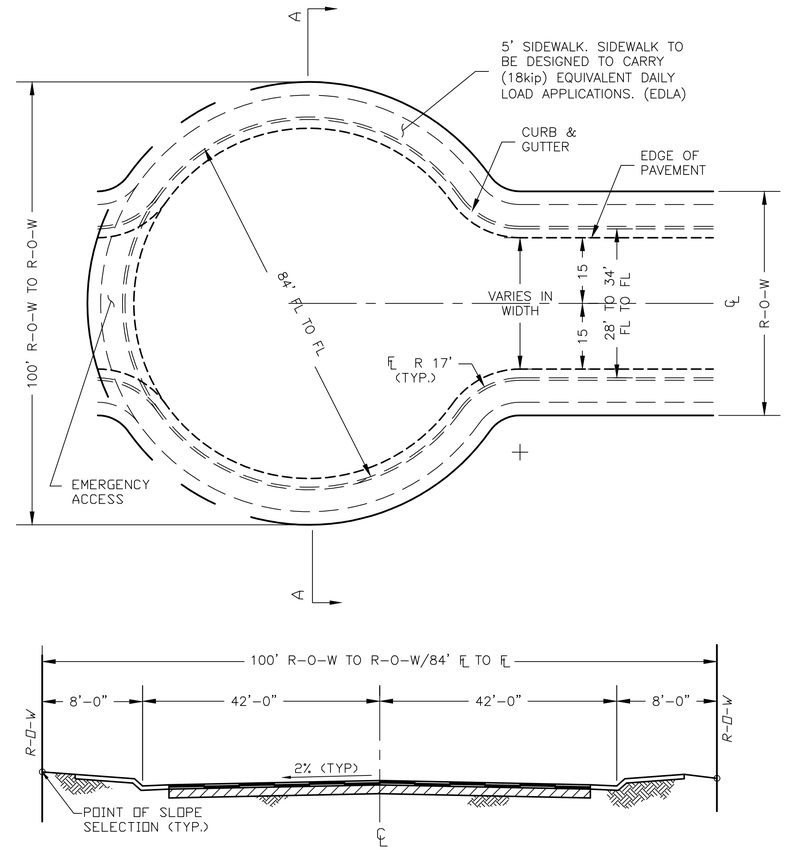

SECTION A – A
84' ℄ to ℄

NOTE:

1. SIDEWALK MAY BE DETACHED AS SHOWN ON TEMPLATES 7 AND 9
2. THE FLOWLINE TO FLOWLINE DISTANCE OF 84' AND ON-STREET PARKING IS ALLOWED IF THERE IS EMERGENCY ACCESS CONNECTED TO THE CUL-DE-SAC THAT IS ACCEPTABLE TO THE APPROPRIATE FIRE PROTECTION DISTRICT.
3. IF EMERGENCY ACCESS CONNECTION IS NOT PROVIDED, A MINIMUM OF FOUR OFF-STREET PARKING SPACES PER DWELLING UNIT IS REQUIRED AND ON STREET PARKING IS NOT PERMITTED. ATTACHED SIDEWALK IS REQUIRED.

NOTE: Other than option 1 shown hereon, alternate standards for cul-de-sacs shall be approved by the appropriate fire protection district.

OPTION 3

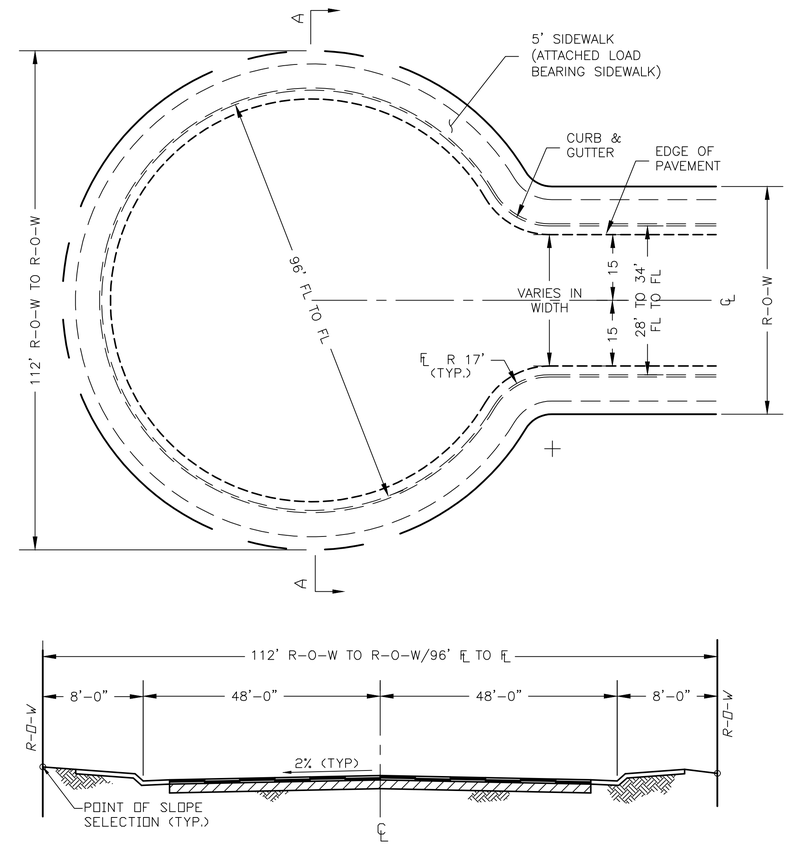

SECTION A – A
96' ℄ to ℄

NOTE:

1. SIDEWALK MAY BE DETACHED AS SHOWN ON TEMPLATES 7 AND 9
2. A MINIMUM OF FOUR OFF-SITE STREET PARKING SPACES PER DWELLING UNIT IS REQUIRED AND ON-STREET PARKING IS NOT PERMITTED.

Revisions:	Designed By: STAFF	Scale: (As Shown)	
	Drawn By: D.A.M.	Date Created:	
	Checked By: Staff	Plot Date: 8/16/22	F.I.R. Date:
	File: TEMP-14-NEW.dwg	F.O.R. Date:	For Const. Date:
	File Location: G:_CAD\Standards\Road-Templates		

JEFFERSON COUNTY COLORADO

DIVISION OF Transportation and Engineering
100 JEFFERSON COUNTY PARKWAY, SUITE 3500
GOLDEN, COLORADO 80419
(303) 271-8495

TEMP-14 (OPT 1-3) STREET CUL-DE-SAC
JEFFERSON COUNTY

Project No.: ---- Sheet ---- Of -

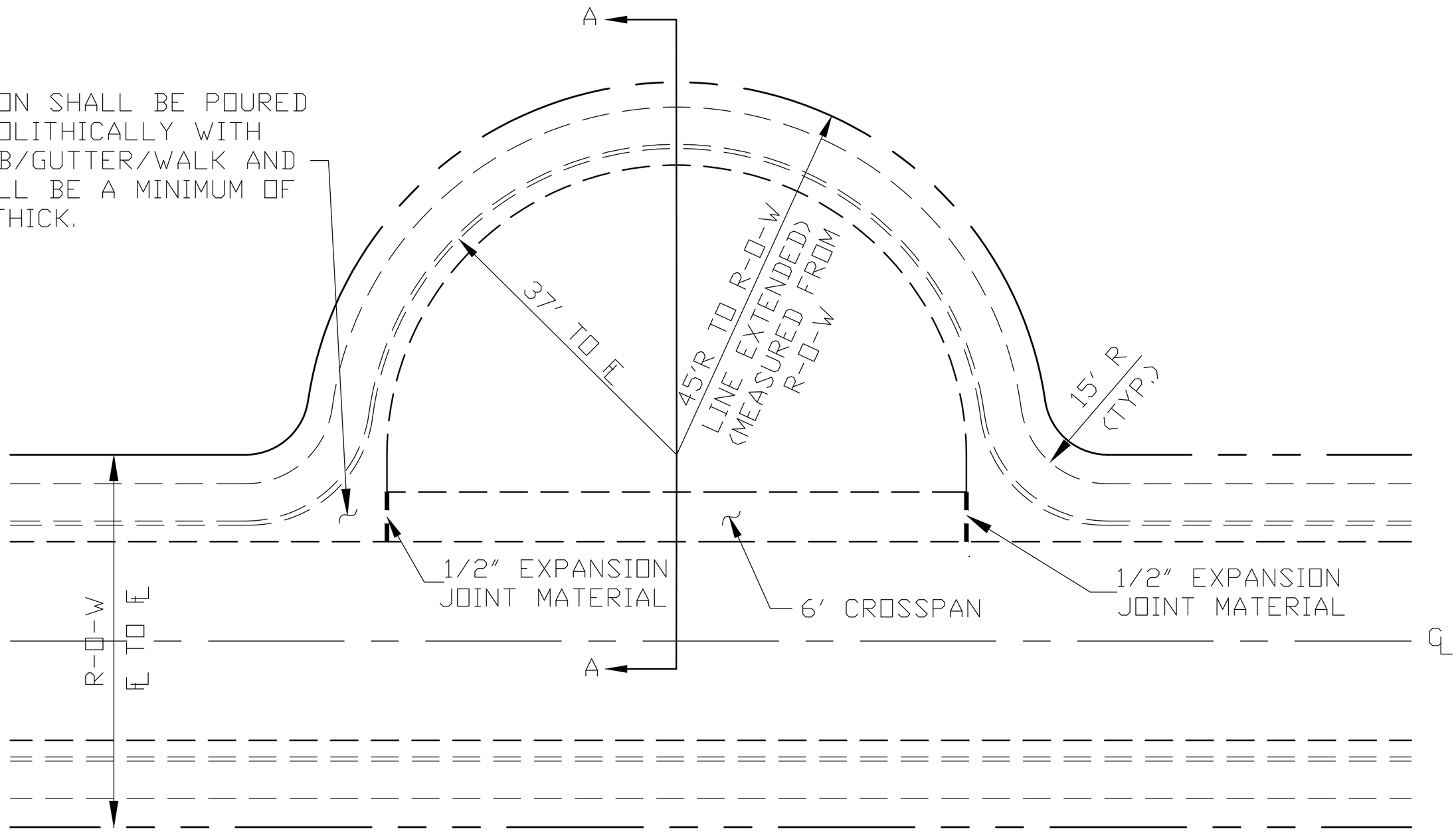

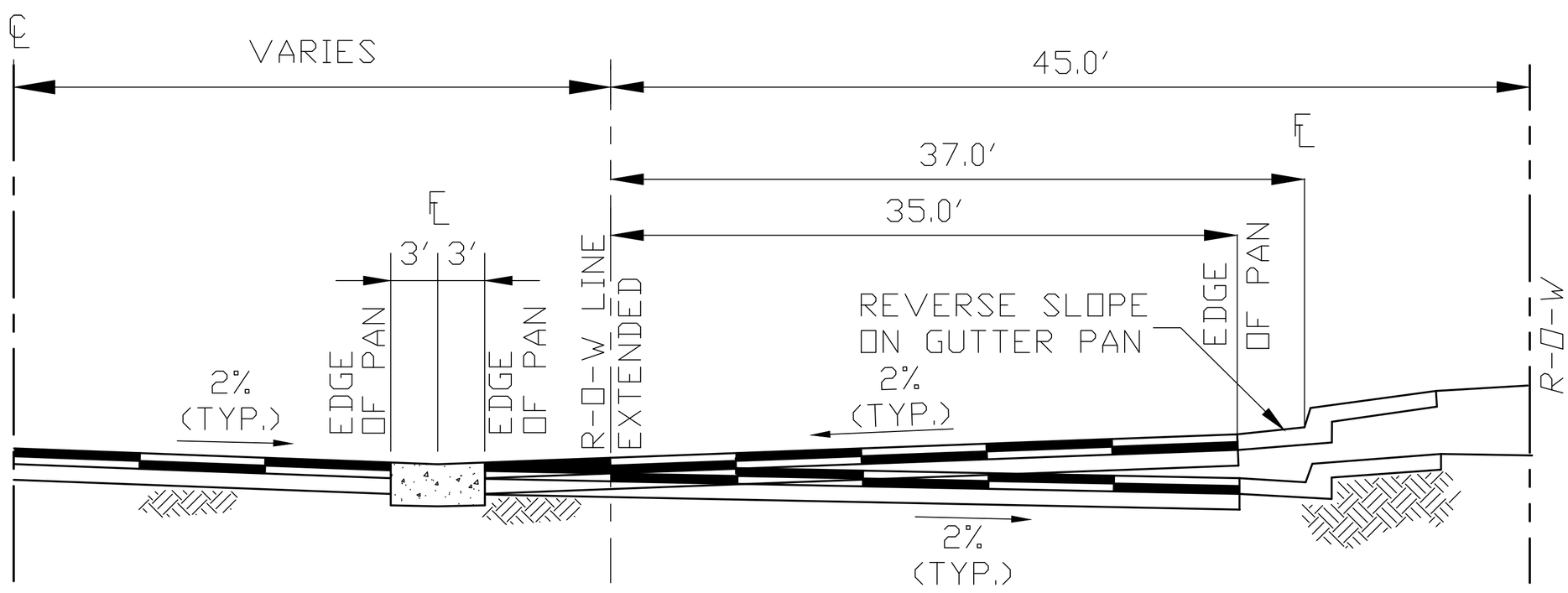

SECTION A – A

NOTE:

1. IF SUFFICIENT FALL IS AVAILABLE AROUND THE FLOWLINE OF THE PARTIAL CUL-DE-SAC (> 1%), THE CUL-DE-SAC MAY SLOPE AWAY FROM THE CROSSPAN. SHOW SPOT ELEVATIONS AND FLOW ARROWS ON THE CONSTRUCTION PLANS.
2. SEE STANDARD NO.10 FOR CONCRETE JOINT DETAILS.
3. SEE STANDARD NO.5 FOR CROSSPAN DETAIL.
4. SIDEWALK MAY BE DETACHED AS SHOWN ON TEMPLATES 7 AND 9

DATE: 01/04/2016	JEFFERSON COUNTY DIVISION of TRANSPORTATION AND ENGINEERING 100 JEFFERSON CNTY. PKWY., SUITE 3500 GOLDEN, CO. 80419 (303) 271-8495
DRAWN BY: D.A.M.	
CHECKED BY: STAFF	PARTIAL CUL-DE-SAC FOR LOCAL STREETS
SCALE:	
FILE: TEMP-15	

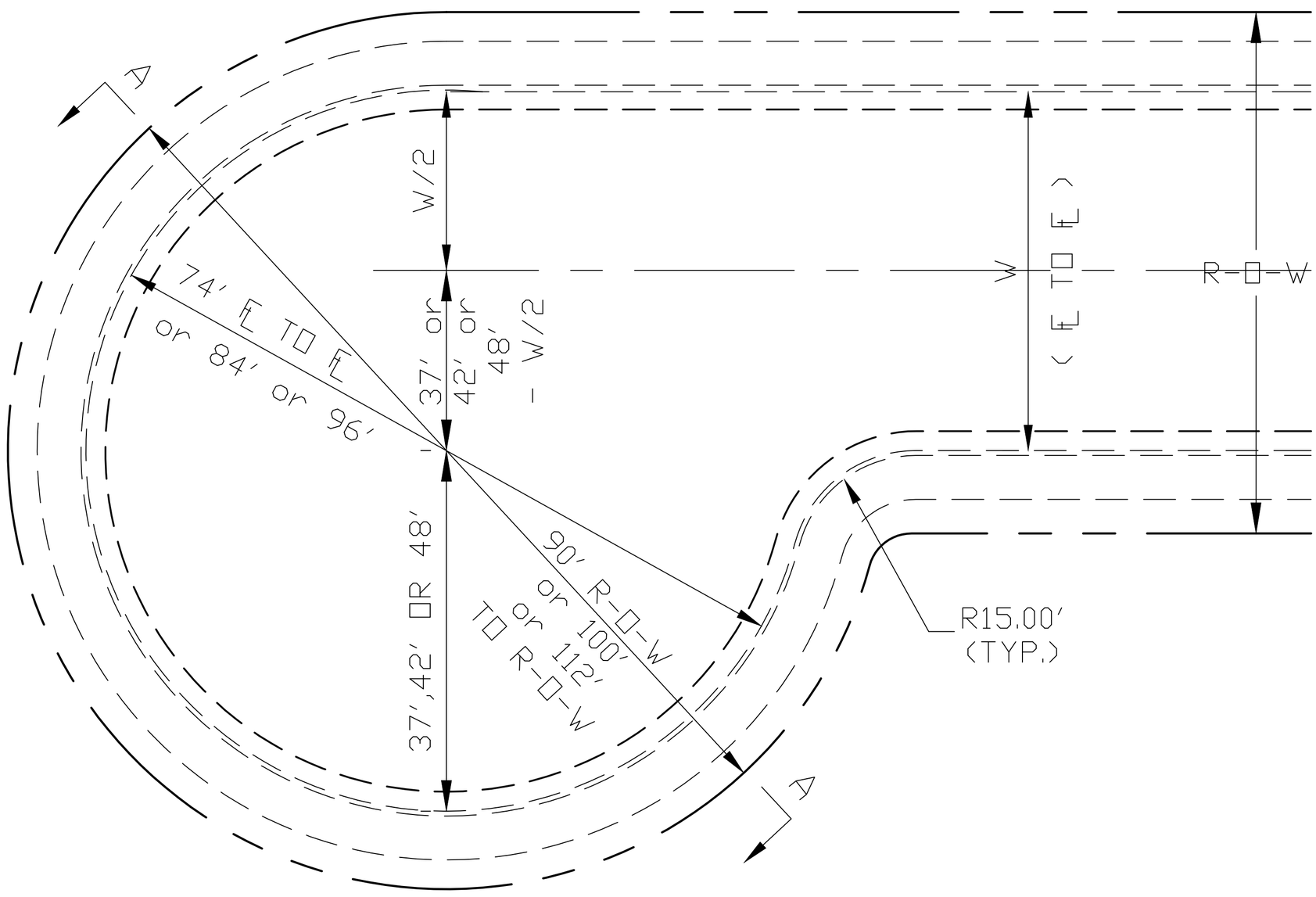

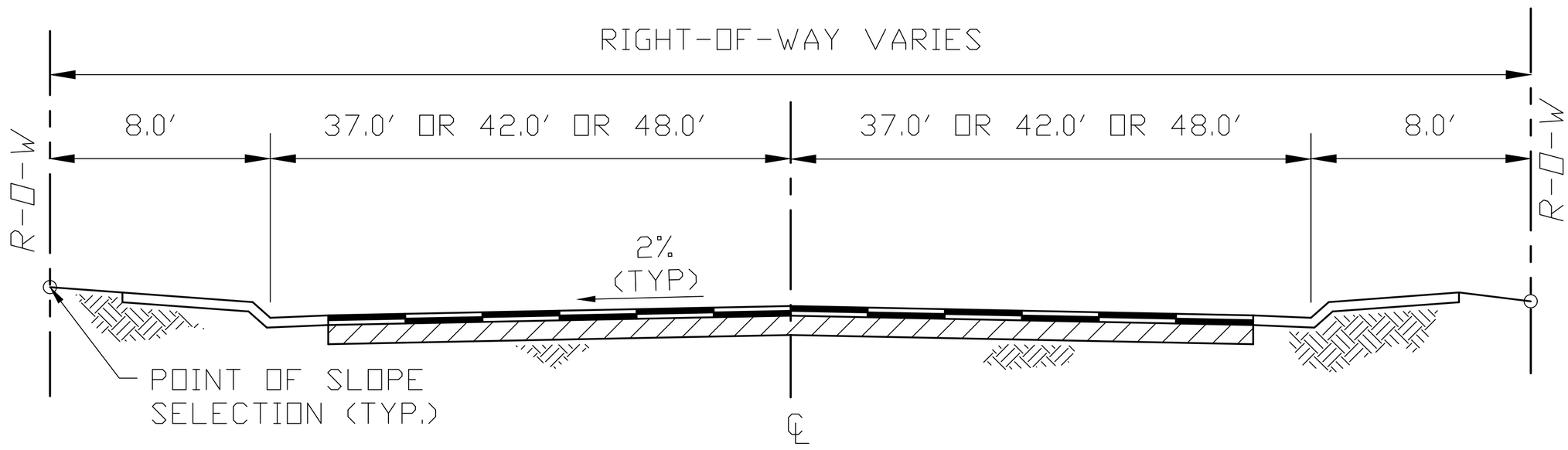

SECTION A – A

NOTES:

1. OFFSET CUL-DE-SAC FOR LOCAL ROADS SHALL BE BUILT ACCORDING TO THE SECTIONS SHOWN ON TEMPLATE NUMBER 16.
2. ALL DIMENSIONS SHALL BE SHOWN ON THE PLANS.
3. SIDEWALK MAY BE DETACHED AS SHOWN ON TEMPLATES 7 AND 9.
4. IF THE FLOWLINE TO FLOWLINE DISTANCE IS LESS THAN 96', A MINIMUM OF FOUR OFF-STREET PARKING SPACES PER DWELLING UNIT IS REQUIRED AND ONSTREET PARKING IS NOT PERMITTED.
5. THE FLOWLINE TO FLOWLINE DISTANCE OF 84' IS ALLOWED PROVIDED THE ATTACHED SIDEWALK HAS A LOAD BEARING CAPACITY THAT IS ACCEPTABLE TO THE APPROPRIATE FIRE PROTECTION DISTRICT.
6. THE FLOWLINE TO FLOWLINE DISTANCE OF 74' AND ON-STREET PARKING IS ALLOWED IF THERE IS EMERGENCY ACCESS CONNECTED TO THE CUL-DE-SAC THAT IS ACCEPTABLE TO THE APPROPRIATE FIRE PROTECTION DISTRICT.

DATE: 01/04/2016	JEFFERSON COUNTY DIVISION of TRANSPORTATION AND ENGINEERING 100 JEFFERSON CNTY. PKWY., SUITE 3500 GOLDEN, CO. 80419 (303) 271-8495
DRAWN BY: D.A.M.	
CHECKED BY: STAFF	OFFSET CUL-DE-SAC FOR LOCAL STREETS
SCALE:	
FILE: TEMP-16	

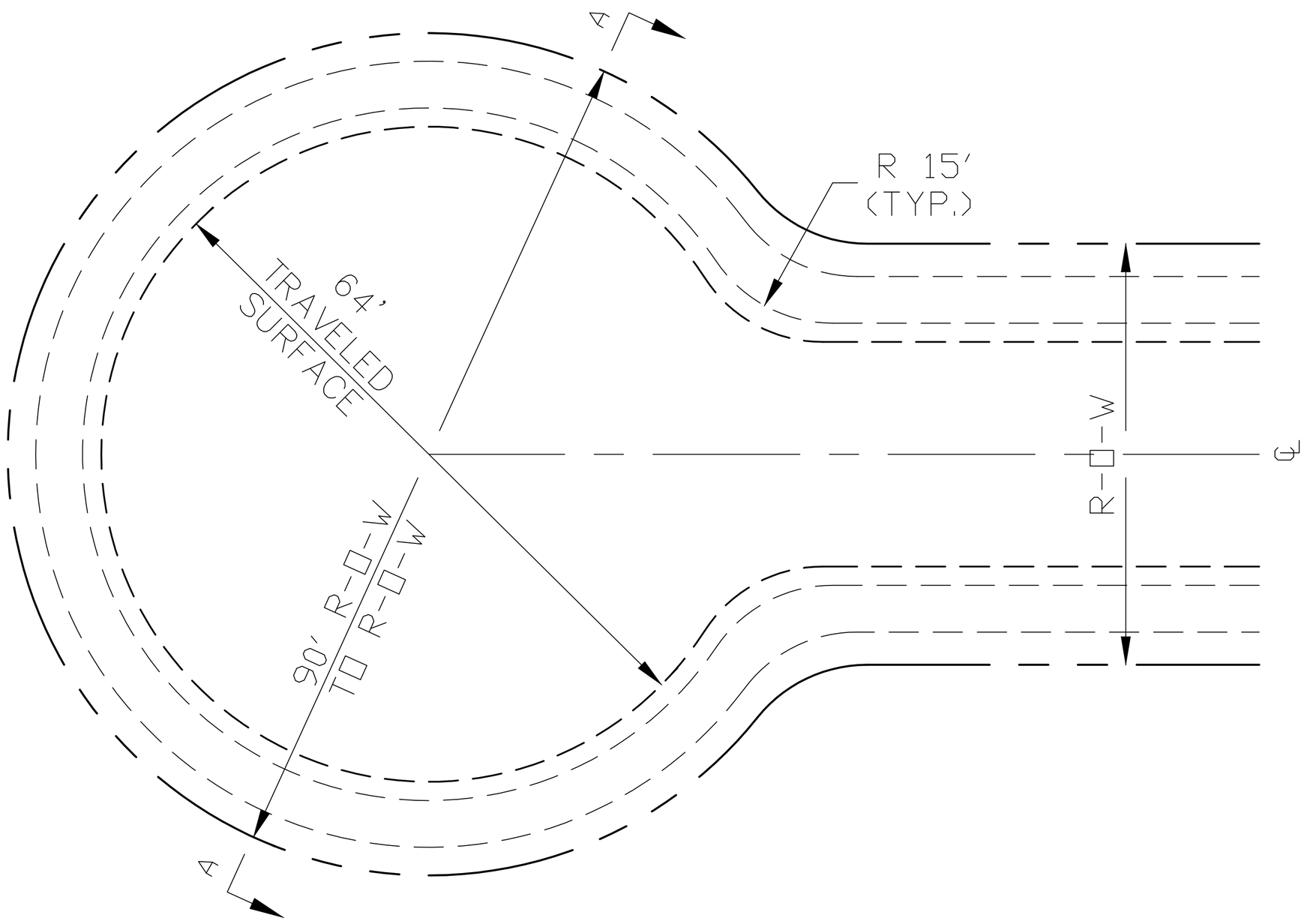

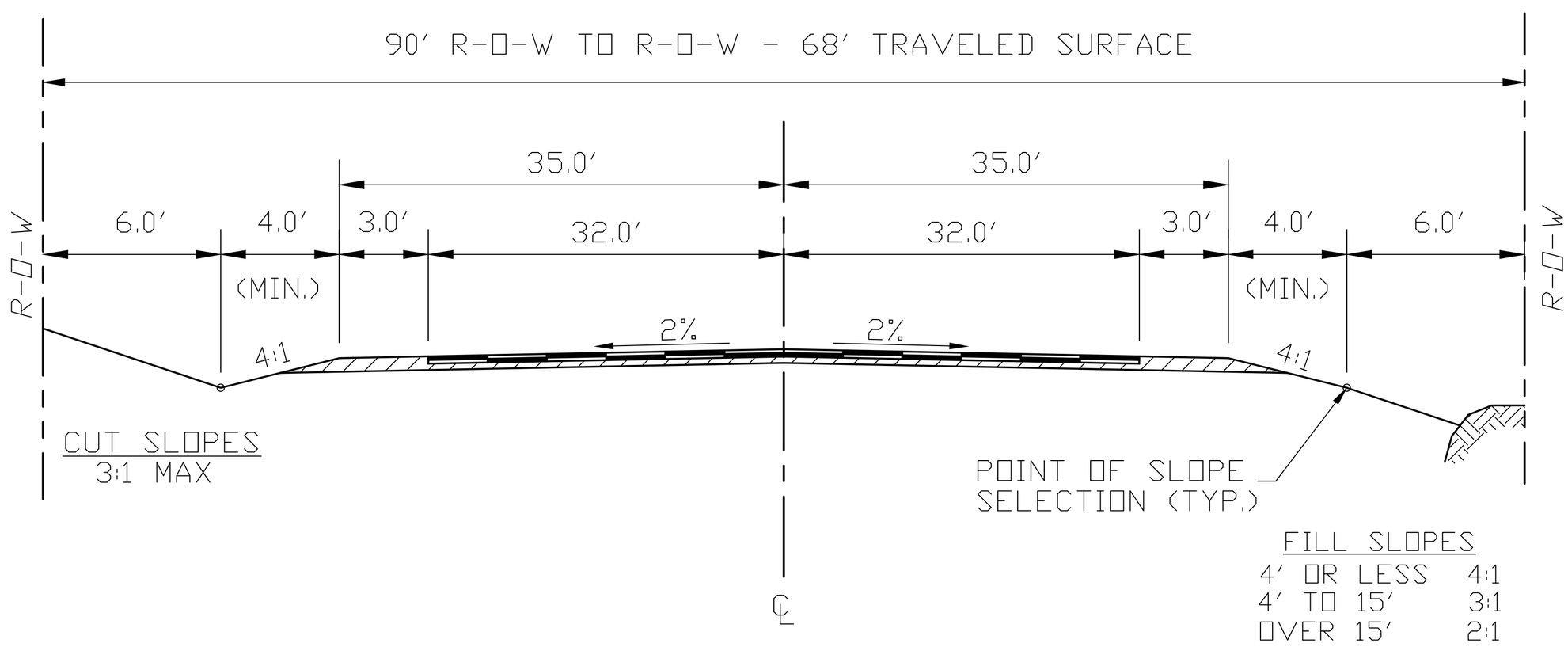

SECTION A - A

1. A MINIMUM OF FOUR OFF-STREET PARKING SPACES PER DWELLING UNIT IS REQUIRED AND ON ROAD PARKING IS NOT PERMITTED.

DATE: 01/04/2016	JEFFERSON COUNTY DIVISION of TRANSPORTATION AND ENGINEERING 100 JEFFERSON CNTY. PKWY., SUITE 3500 GOLDEN, CO. 80419 (303) 271-8495
DRAWN BY: D.A.M.	
CHECKED BY: STAFF	CUL-DE-SAC FOR LOCAL ROADS
SCALE:	
FILE: TEMP-17	

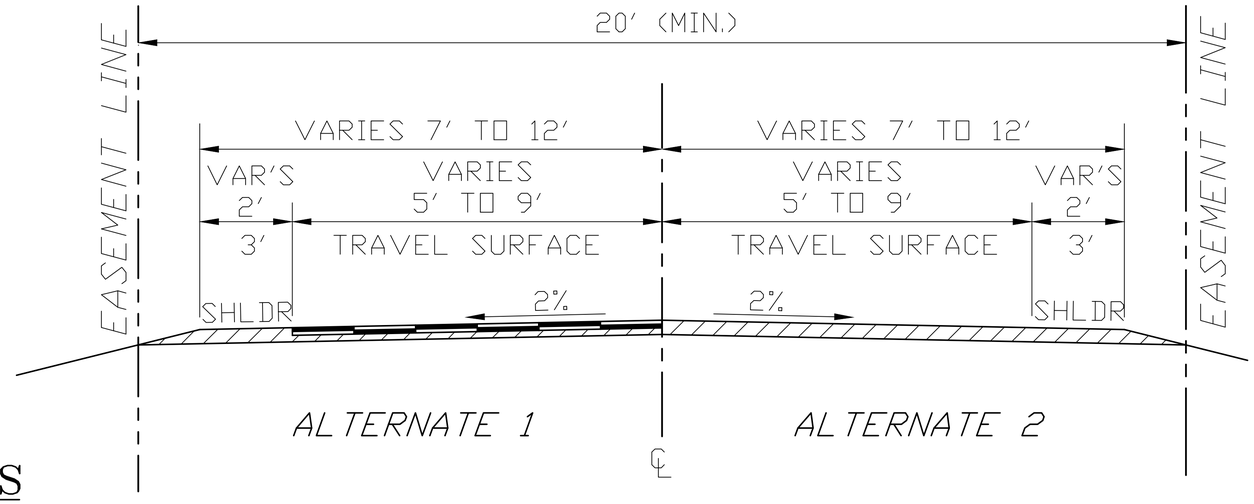

NOTES

1. ALTERNATE 1 (PAVED SURFACE) IS REQUIRED FOR PRIVATE STREETS/ROADS SUBJECT TO THE LAND DEVELOPMENT REGULATIONS.

2. ALTERNATE 2 (ALL WEATHER SURFACE) IS PERMITTED FOR DRIVEWAYS AND FOR PRIVATE STREETS/ROADS SUBJECT TO THE LAND DEVELOPMENT REGULATIONS.

3. ADDITIONAL EASEMENTS MAY BE REQUIRED FOR CUT AND FILL SLOPES, DRAINAGE STRUCTURES AND MAINTENANCE.

4. CURB AND GUTTER AND/OR DITCHES ARE REQUIRED FOR PRIVATE STREETS SUBJECT TO THE LAND DEVELOPMENT REGULATION.

5. SEE SECTION 3.7.8 FOR ADDITIONAL DESIGN CRITERIA.

6. DRIVEWAYS LONGER THAN 150 FEET ARE REQUIRED TO HAVE 12 FOOT WIDE TRAVEL SURFACE WITH 2 FOOT WIDE SHOULDERS ON BOTH SIDES.

7. ON STREET/ROAD PARKING IS NOT PERMITTED.

8. ALL-WEATHER TRAVEL SURFACE MAY BE USED.

9. Super-elevation on driveways may be allowed for drainage purposes as approved by Planning and Zoning.

DATE: 08/16	DRIVEWAY/PRIVATE STREET/ ROAD & NON-MAINTAINED STREET/ ROAD IN COUNTY ROW	JEFFERSON COUNTY DIVISION of TRANSPORTATION and ENGINEERING 100 JEFFERSON CNTY. PKWY., SUITE 3500 GOLDEN, CO. 80419 (303) 271-8495
SCALE:		
Drawn By: D.A.M.		
Designed By: STAFF		
FILE: TEMP-18		

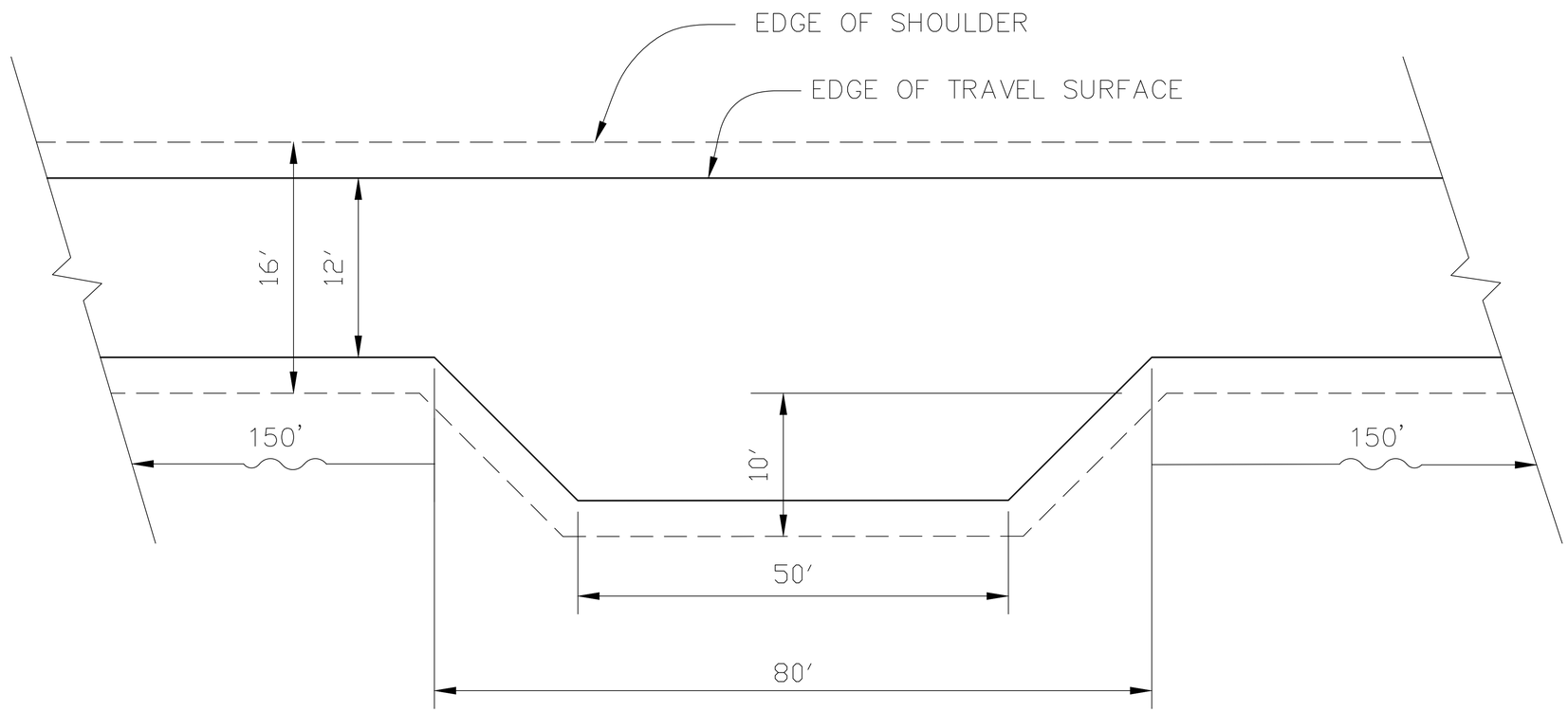

DATE: 12/9/2015	PULL OUT FOR PRIVATE ROAD	JEFFERSON COUNTY DIVISION of TRANSPORTATION AND ENGINEERING 100 JEFFERSON CNTY. PKWY., SUITE 3500 GOLDEN, CO. 80419 (303) 271-8495
SCALE:		
Drawn By: D.A.M.		
Designed By: STAFF		
FILE: TEMP-19		

NOTE:

1. SEE SECTION 3.7.8 FOR DESIGN CRITERIA.

2. A COMPUTER GENERATED TURN STUDY USING THE LOCAL FIRE DISTRICT APPARATUS SPECIFICATIONS MAY BE REQUIRED TO DEMONSTRATE THAT FIRE APPARATUS CAN NEGOTIATE A PROPOSED TURNAROUND.

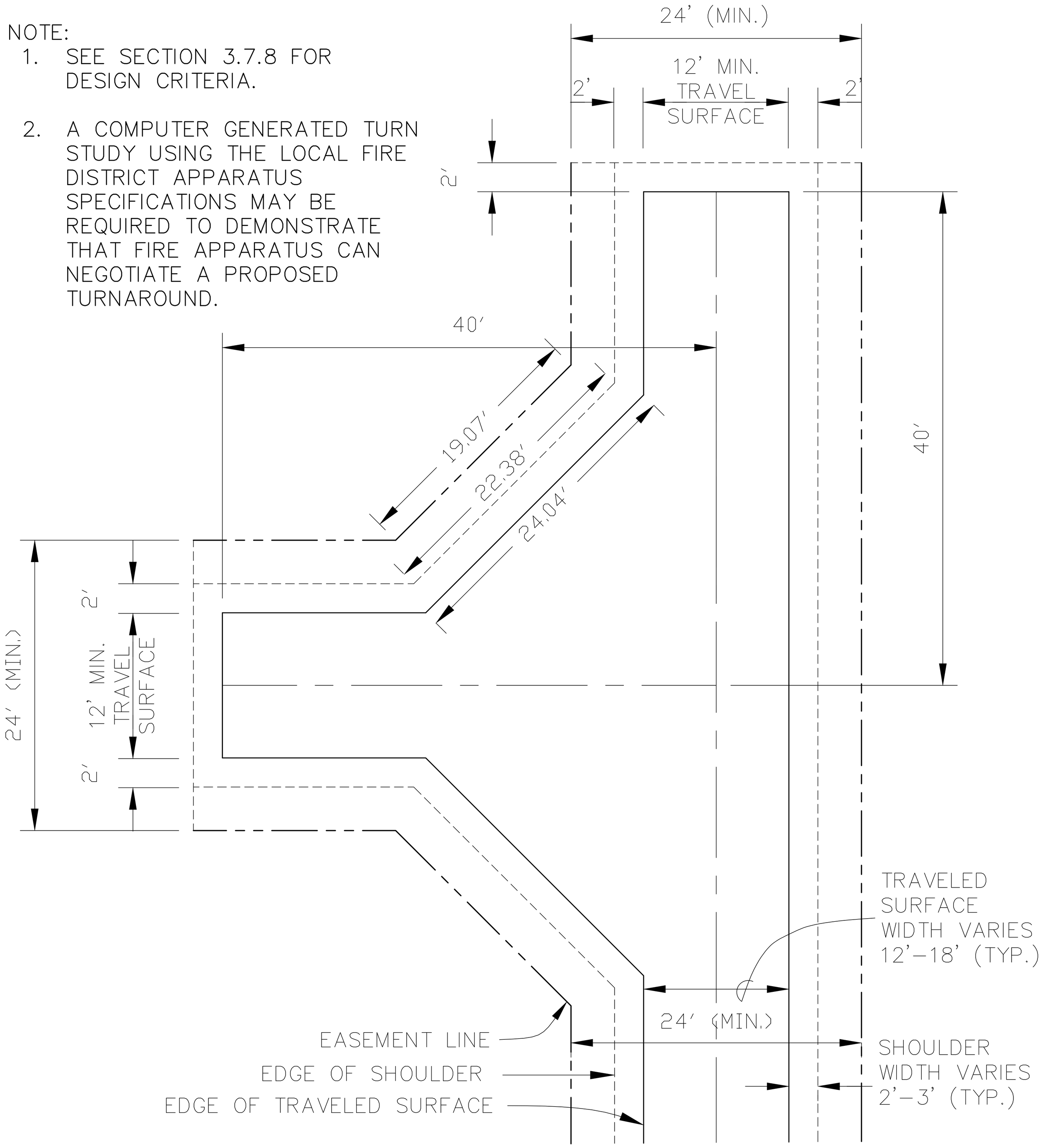

DATE: 12/9/2015	JEFFERSON COUNTY DIVISION. of TRANSPORTATION AND ENGINEERING 100 JEFFERSON CNTY. PKWY., SUITE 3500 GOLDEN, CO. 80419 (303) 271-8495
DRAWN BY: D.A.M.	
CHECKED BY: STAFF	HAMMERHEAD TURNAROUND FOR DRIVEWAYS/PRIVATE ROADS
SCALE: NTS	
FILE: TEMP-20	

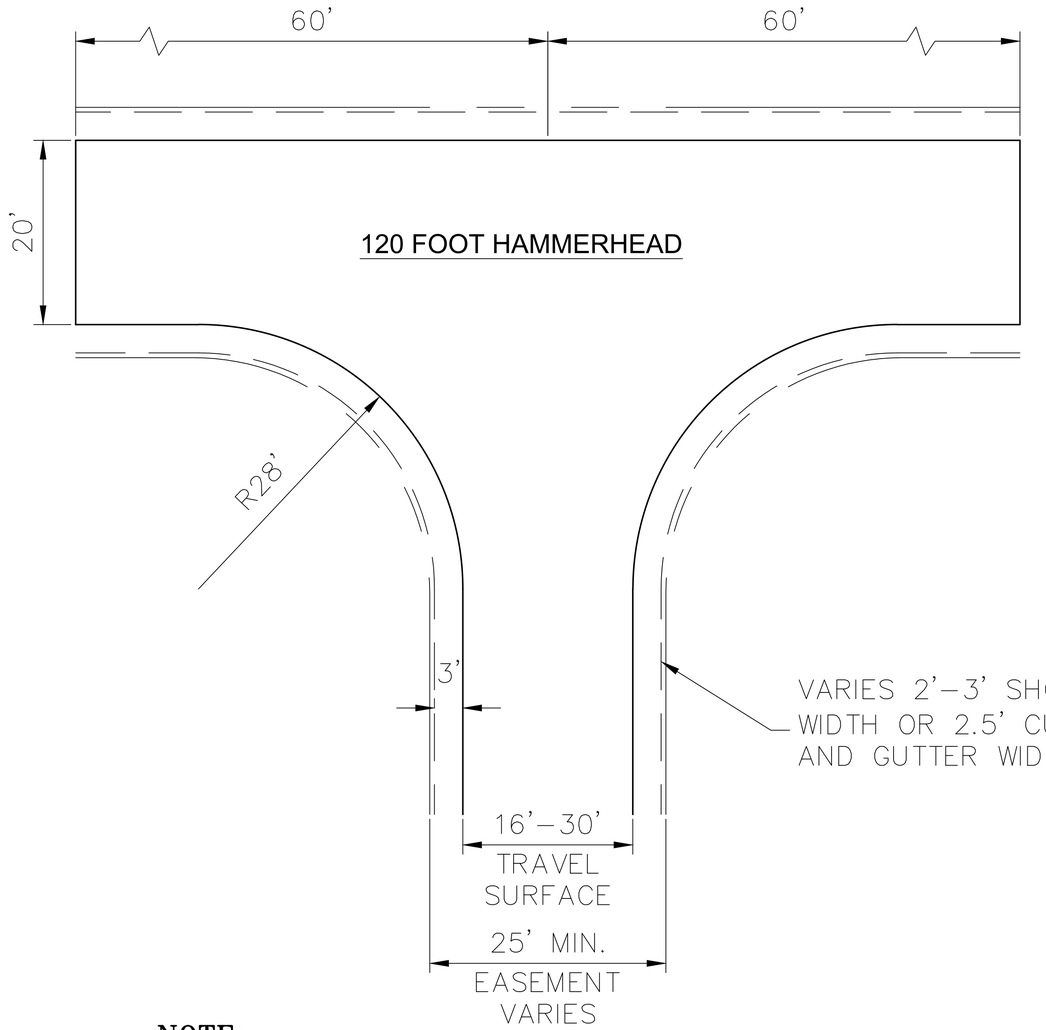

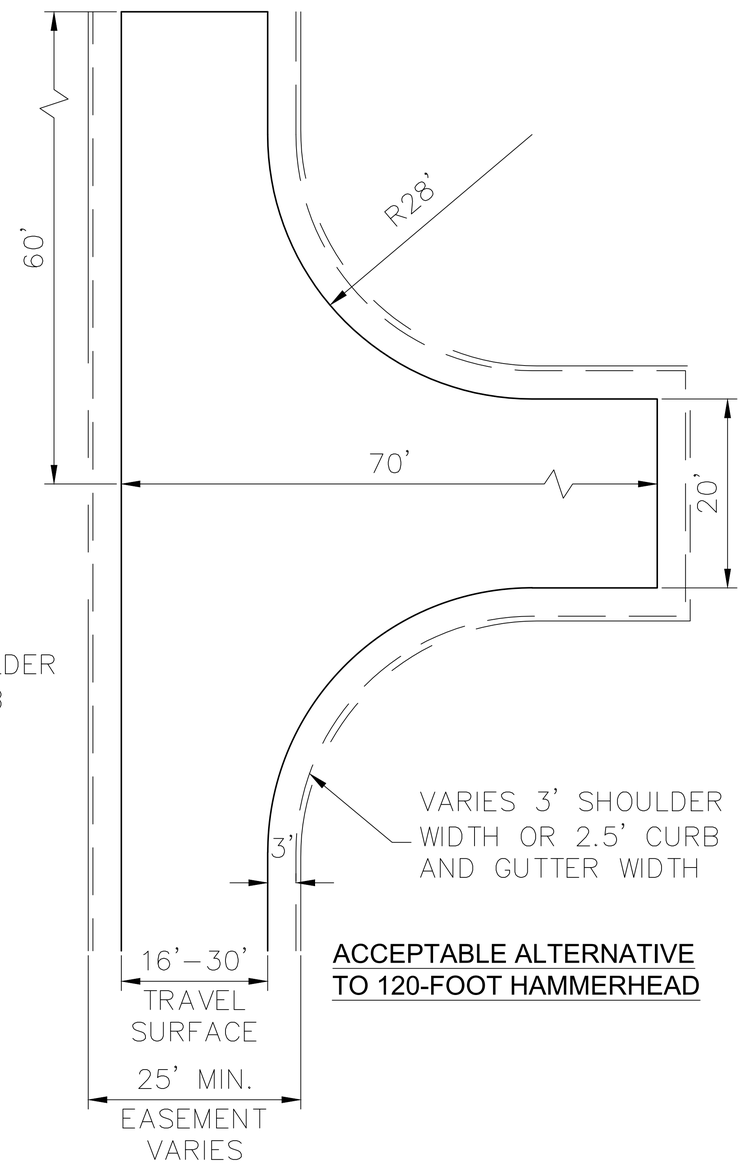

ACCEPTABLE ALTERNATIVE
TO 120-FOOT HAMMERHEAD

NOTE:

A COMPUTER GENERATED TURN STUDY USING THE LOCAL FIRE DISTRICT APPARATUS SPECIFICATIONS MAY BE REQUIRED TO DEMONSTRATE THAT FIRE APPARATUS CAN NEGOTIATE A PROPOSED TURNAROUND.

DATE: 01/04/2016	HAMMERHEAD TURNAROUND FOR PRIVATE STREET	JEFFERSON COUNTY DIVISION of TRANSPORTATION AND ENGINEERING 100 JEFFERSON CNTY. PKWY., SUITE 3500 GOLDEN, CO. 80419 (303) 271-8495
SCALE:		
Drawn By: D.A.M.		
Designed By: STAFF		
FILE: TEMP-21		

G:_CAD\Standards\Road-Templates\Temp-21-NEW.dwg

TO: Lindsey Wire, P.E. (JeffCo)

FROM: Matthew Deaver, P.E., Development Review Engineering Manager (CCOB)

DATE: November 23, 2022

SUBJECT: Regulation Amendment Case 22-122945AM (Transportation Design and Construction Manual) - Comment Letter

Thank you for submitting revisions for the above manual. Comments from internal City and County of Broomfield reviewers are provided below.

Traffic Comments

- See Redline comments here. Please let me know if you have any questions.

Lindsey Wire

From: AUTOMAILER@JEFFCO.US
Sent: Monday, December 5, 2022 1:15 PM
To: Lindsey Wire
Cc: Troy Jones
Subject: 22 122945 AM - Agency Response

Follow Up Flag: Follow up
Flag Status: Flagged

Case Number: 22 122945 AM
Case Type: Regulation Amendment
Case Name: Transportation and Construction Manual
Review: Building Division
Results: No Comment (no further review)
Review Comments:
Scheduled End Date: 11/23/2022
Reviewer: Troy Jones
Description: Regulations Amendment to the Transportation and Construction Manual

Heather Gutherless, Long Range Planning
Jefferson County Planning & Zoning
100 Jefferson County Parkway
Golden CO 80419
VIA EMAIL

November 21, 2022

To: Heather Gutherless, Senior Planner.
Cc: Chris O'Keefe, Director of Planning & Zoning and Steve Durian, Director of Traffic & Engineering.
From: Paul R. Olson, P.E., T.E. for the *Conifer & South Evergreen Community Committee*.
Subject: Review comments regarding proposed updates to the Transportation Design and Construction Manual, "Redline_TDCM_DRAFT_10202022.pdf".

General Comments

As a general matter, the Transportation Design and Construction Manual (TDCM) defines engineering standards; therefore, it is appropriate that the TDCM is under the strict authorship control of the Jefferson County Traffic & Engineering Division (or similar authority) NOT the Planning & Zoning Division. There is actually very little in the document that provides guidance with respect to planning and/or zoning. Similar documents authored by other cities, counties, and state departments of transportation are the domain of the engineering staff within the agency.

Additionally, many of the sections of the document they are a jumble of clauses taken from other sources and assembled into this document. As a result, the TDCM contains a significant number of conflicts and oversights – for example, Templates 18, 19, 20, 21 and Standard 8 are conflicting – these document problem areas must be resolved before this document can be promulgated. Clearly, it is inappropriate to commingle land-use decision requirements with critical design and construction standards intended to keep our roadways safe, functional, and resilient.

Moreover, the design standards, construction templates, and other guidance presented in the TDCM should also be reviewed and approved then sealed by a professional engineer.

The TDCM reader would benefit from a document that contains a coherent figure, table, and page numbering system.

SPECIFIC COMMENTS

The following are the Committee's specific comments with respect to the **TDCM Chapter 3 Design and Technical Criteria**:

1. **Section 3.4 Standard Templates**: *Under* '**Private street/road templates and Non-maintained streets/roads in County ROW templates**', *minimum requirements for private driveways are undefined. Additionally, the table references LDR Section 15, which contains roadway design requirements; however, during many design and construction scenarios, the TDCM and LDR Section 15 document will be in conflict; therefore, the Committee recommends that roadway design and construction requirements be removed for LDR Section 15.*
2. **Section 3.7.8 Non-Maintained Roads in County Right-of-Way, Driveways, and Private Street/Roads, and Non-Maintained Roads in County Right-of-Way Standards**: *Template 18 only addresses the cross section, it does not address the plan view.*
3. **Section 3.7.8.1.1 Curve Radius**: *A 30'* **curve radius** *will not be adequate for emergency vehicles in many scenarios; therefore, the* **curve radius** *specification should be situationally based. Also, please address the clear space beyond the pavement limits to accommodate emergency vehicle overhangs, that is, those areas beyond its wheelbase.*
4. **Section 3.7.8.1.2 Width**: *The Committee has determined that 500' is too long a distance; therefore, the* **width** *specification should be based and justified by the length of hose that the firefighting apparatus carries.*
5. **Section 3.7.8.1.3 Grade**: *Grade limitations are generally positive; however, the TDCM also needs to address the maximum change of grade from one roadway section to another. In many scenarios, going from 12% down to 12% up in a short distance will be a safety hazard. Additionally, there should be an explanation for this statement reading, for example: "***Maximum 12 percent grade where the dip of the natural terrain bears between South 60° East and South 45° West***". Moreover, all other possible orientations should also be specified.*
6. **Section 3.7.8.2.1 Curve Radius**: *What is this 30'* **curve radius** *based upon? There needs to be a reference or justification for this specification: It could be that a 30' radius is not sufficient in many scenarios.*
7. **Section 3.7.8.2.2 Width (For a street/road serving up to 15 dwelling units)**: *Will parking be allowed on these roadways? What about horizontal and vertical obstructions? This* **width** *specification should situationally based.*
8. **Section 3.7.8.3**: *The use of the clause, "***The off-site driveway or private road shall meet requirements of this section***" is ambiguous. Such as clause as this*

must clearly state, in detail, the **requirements** *that the roadway design and construction is required to meet. As this section is written, it is not clear what would constitute an unacceptable roadway or driveway design! There are no details or drawings to clearly show what the minimum acceptable roadway and driveway. This section must include a statement similar to the following, "***The documentation shall include scale drawings upon which fire protection district approved turning templates are overlayed***".*

*Additionally, my reaction to the following statement, "***Such statement shall bear the professional engineer's seal, signature and date,…***" is that, as a professional engineer, I (Paul Olson) would not risk my professional engineer's license to approve plans for an on-site driveway or private roadway in a circumstance where the actual requirements are so ill-defined.*

Moreover, if the driveway cannot safely accommodate a fire protection district apparatus then there is NO condition where an exception should be granted – this requirement should be deleted completely – inasmuch as it is not clear how Jefferson County Staff will judge any requested exemption under this clause. In my opinion (Paul Olson), this clause will only cause Staff and the public significant, ongoing difficulties that are unnecessary. Again, there are no templates or drawings that detail the minimum requirements for driveways as they intersection with the county roadway!

The following are the Committee's specific comments with respect to the **TDCM Transportation Studies Appendix**:

1. **General:** *This section is greatly improved! However, it needs better section numbering to match the rest of the document and there needs to be a separate section on* **Traffic Signals** *which would include a specification for engineering studies of* **MUTCD Warrants and Alternatives**.
2. **Requirements for Transportation Studies (TS):** *The trip generation analysis should include both weekdays and weekend. This is particularly important for commercial developments but also residential developments in the vicinity of commercial developments such as shopping centers.*

   For mountain area developments, the study should also analyze the impact of major transportation corridors. For example, a currently active proposed development within the Conifer/Aspen Park community – the proposed **Conifer Center PD, Case No. 20-111200RZ** *– should study the impact to U.S.-285 in the Turkey Creek Canyon. This is a major bottleneck, in particular for emergency access and routes for evacuation.*
3. **Trip Generation Summary Table:** *Columns to be modified in and added to the table, "***1) columns for Weekdays AM Peak & PM Peak, 2) columns for Saturday AM Peak & PM Peak, and 3) columns for Sunday AM Peak & PM**

Peak".

4. **Existing Area Conditions:** *The discussion of existing traffic counts is inadequate. This section needs to set clear requirements for traffic counts:* **Automated Daily Counts** *need to be collected for at least two weeks;* **Turning Movement Counts,** *that they are now mostly automated, should be collected based upon the peaks periods identified in the daily counts;* **Turning Movement Counts** *shall NOT be collected on Monday, Friday or the day before or after a holiday weekend; and* **Turning Movement Counts** *will be required on weekends for commercial and residential developments in the vicinity of a commercial development.*

   All counts shall be sufficient to clearly identify peaks and to show that the analysis is not based upon the lowest volumes collected. All counts shall establish the average daily volumes as well as the peak hour volumes.

5. **Background Traffic:** *Are you requiring the inclusion of outputs from the* **Denver Regional Council of Governments (DRCOG) travel demand model?** *If so there should be a step to calibrate the impacted subsection of the model to current conditions.*

6. **Project Traffic:** *Trip distribution shall be based upon the trip tables in the DRCOG model. If there are none then a* **Origin and Destination Study** *should be provided. The DRCOG model shall be run with the traffic generated by the proposed development.*

7. **Levels of Services (LOS)***: These determinations shall be supported by* **Volume to Capacity Ratios (V/C)**. *The* **LOS** *determinations themselves are not an accurate depiction of the traffic situation. For example the* **V/C** *could be on the lowest edge of a* **LOS** *range say V/C of 0.80 is it really* **LOS C** *and be judged as acceptable, however, in reality it is worse.*

   Would a facility that operates at **LOS D** *or* **V/C** *of 0.90 for 12 consecutive hours a day be acceptable? What are the limits on how many hours a day that a facility could operate in congested conditions? An hour in the peaks may be OK but not more.*

   Jefferson County Transportation and Engineering Level of Service Criteria for Arterials *is based on* **Volume-to-Capacity Ratios Level of Service Description V/C:**

   A. Free-flow conditions with unimpeded maneuverability, stopped delay at signalized intersection is minimal, that is, on the order of 0.00 to 0.60.

   B. Reasonably unimpeded operations with slightly restricted maneuverability. Stopped delays are not bothersome at 0.61 to 0.70.

C. Stable operations with somewhat more restrictions in making mid-block lane changes than **LOS B**. Motorists will experience appreciable tension while driving at 0.71 to 0.80.

D. Approaching unstable operations where small increases in volume produce substantial increases in delay and decreases in speed of 0.81 to 0.90.

E. Operations with significant intersection approach delays and low average speeds of 0.91 to 1.00.

6. **Signalized Intersections:** *The TDCM should require proposed signal phasing plus the proposed timings, cycle times, phase timings, vehicle and pedestrian clearance intervals, controller settings, detection zone placements, etc. Projected queue lengths shall be calculated.*

   Engineering studies as required by the MUTCD shall present all the signal warrants even the ones that are not met and they shall include at least a week of 15 minute counts.

QUALIFICATIONS

I present the following qualifications as ample proof that I am more than qualified in Traffic Engineering to make the above comments.

- *Registered Civil Engineer WA, OR, CA, AZ, NV*
- *Registered Traffic Engineer CA, OR*
- *Fellow at Institute of Transportation Engineers*
- *ITE Professional Traffic Operations Engineer, Retired*
- *8 Years Washington State DOT*
  15 Years Consulting Engineer
  18 Years Federal Highway Administration
- *Educator:*
  - *Washington State University*
  - *University of Idaho*
  - *University of Maryland*
  - *National Highway Institute*
- *Retired member National Academies of Science, Engineering and Medicine, Transportation Research Board, Standing Committee on Traffic Signal Systems*
- *International Municipal Signal Association, Level 2 Signal Technician (Retired)*
- *Institute of Electrical and Electronic Engineers (25 years)*
- *41 years of experience in transportation engineering*

CONCLUSION

The Committee is hopeful that the above recommendations will help improve the future health, safety, and welfare of both residents, visitors, and travelers in the unincorporated areas of Jefferson County.

Respectfully submitted,

Paul R. Olson, P.E., T.E.

25587 Conifer Road
STE 105-611
Conifer CO 80433

Conifer and South Evergreen Community Committee

Heather Gutherless, Long Range Planning
Jefferson County Planning & Zoning
100 Jefferson County Parkway
Golden CO 80419
VIA EMAIL

November 21, 2022

To: Heather Gutherless, Senior Planner.
Cc: Chris O'Keefe, Director of Planning & Zoning and Steve Durian, Director of Traffic & Engineering.
From: Paul R. Olson, P.E., T.E. for the *Conifer & South Evergreen Community Committee*.
Subject: Review comments regarding proposed updates to the Transportation Design and Construction Manual, "Redline_TDCM_DRAFT_10202022.pdf".

General Comments

As a general matter, the Transportation Design and Construction Manual (TDCM) defines engineering standards; therefore, it is appropriate that the TDCM is under the strict authorship control of the Jefferson County Traffic & Engineering Division (or similar authority) NOT the Planning & Zoning Division. There is actually very little in the document that provides guidance with respect to planning and/or zoning. Similar documents authored by other cities, counties, and state departments of transportation are the domain of the engineering staff within the agency.

Additionally, many of the sections of the document they are a jumble of clauses taken from other sources and assembled into this document. As a result, the TDCM contains a significant number of conflicts and oversights – for example, Templates 18, 19, 20, 21 and Standard 8 are conflicting – these document problem areas must be resolved before this document can be promulgated. Clearly, it is inappropriate to commingle land-use decision requirements with critical design and construction standards intended to keep our roadways safe, functional, and resilient.

Moreover, the design standards, construction templates, and other guidance presented in the TDCM should also be reviewed and approved then sealed by a professional engineer.

The TDCM reader would benefit from a document that contains a coherent figure, table, and page numbering system.

SPECIFIC COMMENTS

The following are the Committee's specific comments with respect to the **TDCM Chapter 3 Design and Technical Criteria**:

1. **Section 3.4 Standard Templates**: *Under* '**Private street/road templates and Non-maintained streets/roads in County ROW templates**', *minimum requirements for private driveways are undefined. Additionally, the table references LDR Section 15, which contains roadway design requirements; however, during many design and construction scenarios, the TDCM and LDR Section 15 document will be in conflict; therefore, the Committee recommends that roadway design and construction requirements be removed for LDR Section 15.*
2. **Section 3.7.8 Non-Maintained Roads in County Right-of-Way, Driveways, and Private Street/Roads, and Non-Maintained Roads in County Right-of-Way Standards**: *Template 18 only addresses the cross section, it does not address the plan view.*
3. **Section 3.7.8.1.1 Curve Radius**: *A 30'* **curve radius** *will not be adequate for emergency vehicles in many scenarios; therefore, the* **curve radius** *specification should be situationally based. Also, please address the clear space beyond the pavement limits to accommodate emergency vehicle overhangs, that is, those areas beyond its wheelbase.*
4. **Section 3.7.8.1.2 Width**: *The Committee has determined that 500' is too long a distance; therefore, the* **width** *specification should be based and justified by the length of hose that the firefighting apparatus carries.*
5. **Section 3.7.8.1.3 Grade**: *Grade limitations are generally positive; however, the TDCM also needs to address the maximum change of grade from one roadway section to another. In many scenarios, going from 12% down to 12% up in a short distance will be a safety hazard. Additionally, there should be an explanation for this statement reading, for example: "***Maximum 12 percent grade where the dip of the natural terrain bears between South 60° East and South 45° West***". Moreover, all other possible orientations should also be specified.*
6. **Section 3.7.8.2.1 Curve Radius**: *What is this 30'* **curve radius** *based upon? There needs to be a reference or justification for this specification: It could be that a 30' radius is not sufficient in many scenarios.*
7. **Section 3.7.8.2.2 Width (For a street/road serving up to 15 dwelling units)**: *Will parking be allowed on these roadways? What about horizontal and vertical obstructions? This* **width** *specification should situationally based.*
8. **Section 3.7.8.3**: *The use of the clause, "***The off-site driveway or private road shall meet requirements of this section***" is ambiguous. Such as clause as this*

must clearly state, in detail, the **requirements** *that the roadway design and construction is required to meet. As this section is written, it is not clear what would constitute an unacceptable roadway or driveway design! There are no details or drawings to clearly show what the minimum acceptable roadway and driveway. This section must include a statement similar to the following,* "**The documentation shall include scale drawings upon which fire protection district approved turning templates are overlayed**".

Additionally, my reaction to the following statement, "**Such statement shall bear the professional engineer's seal, signature and date,…**" *is that, as a professional engineer, I (Paul Olson) would not risk my professional engineer's license to approve plans for an on-site driveway or private roadway in a circumstance where the actual requirements are so ill-defined.*

Moreover, if the driveway cannot safely accommodate a fire protection district apparatus then there is NO condition where an exception should be granted – this requirement should be deleted completely – inasmuch as it is not clear how Jefferson County Staff will judge any requested exemption under this clause. In my opinion (Paul Olson), this clause will only cause Staff and the public significant, ongoing difficulties that are unnecessary. Again, there are no templates or drawings that detail the minimum requirements for driveways as they intersection with the county roadway!

The following are the Committee's specific comments with respect to the **TDCM Transportation Studies Appendix**:

1. **General:** *This section is greatly improved! However, it needs better section numbering to match the rest of the document and there needs to be a separate section on* **Traffic Signals** *which would include a specification for engineering studies of* **MUTCD Warrants and Alternatives**.
2. **Requirements for Transportation Studies (TS):** *The trip generation analysis should include both weekdays and weekend. This is particularly important for commercial developments but also residential developments in the vicinity of commercial developments such as shopping centers.*

   For mountain area developments, the study should also analyze the impact of major transportation corridors. For example, a currently active proposed development within the Conifer/Aspen Park community – the proposed **Conifer Center PD, Case No. 20-111200RZ** *– should study the impact to U.S.-285 in the Turkey Creek Canyon. This is a major bottleneck, in particular for emergency access and routes for evacuation.*
3. **Trip Generation Summary Table:** *Columns to be modified in and added to the table,* "**1) columns for Weekdays AM Peak & PM Peak, 2) columns for Saturday AM Peak & PM Peak, and 3) columns for Sunday AM Peak & PM**

Peak".

4. **Existing Area Conditions:** *The discussion of existing traffic counts is inadequate. This section needs to set clear requirements for traffic counts:* **Automated Daily Counts** *need to be collected for at least two weeks;* **Turning Movement Counts,** *that they are now mostly automated, should be collected based upon the peaks periods identified in the daily counts;* **Turning Movement Counts** *shall NOT be collected on Monday, Friday or the day before or after a holiday weekend; and* **Turning Movement Counts** *will be required on weekends for commercial and residential developments in the vicinity of a commercial development.*

   All counts shall be sufficient to clearly identify peaks and to show that the analysis is not based upon the lowest volumes collected. All counts shall establish the average daily volumes as well as the peak hour volumes.

5. **Background Traffic:** *Are you requiring the inclusion of outputs from the* **Denver Regional Council of Governments (DRCOG) travel demand model?** *If so there should be a step to calibrate the impacted subsection of the model to current conditions.*

6. **Project Traffic:** *Trip distribution shall be based upon the trip tables in the DRCOG model. If there are none then a* **Origin and Destination Study** *should be provided. The DRCOG model shall be run with the traffic generated by the proposed development.*

7. **Levels of Services (LOS)***: These determinations shall be supported by* **Volume to Capacity Ratios (V/C)**. *The* **LOS** *determinations themselves are not an accurate depiction of the traffic situation. For example the* **V/C** *could be on the lowest edge of a* **LOS** *range say V/C of 0.80 is it really* **LOS C** *and be judged as acceptable, however, in reality it is worse.*

   Would a facility that operates at **LOS D** *or* **V/C** *of 0.90 for 12 consecutive hours a day be acceptable? What are the limits on how many hours a day that a facility could operate in congested conditions? An hour in the peaks may be OK but not more.*

   Jefferson County Transportation and Engineering Level of Service Criteria for Arterials *is based on* **Volume-to-Capacity Ratios Level of Service Description V/C:**

   A. Free-flow conditions with unimpeded maneuverability, stopped delay at signalized intersection is minimal, that is, on the order of 0.00 to 0.60.

   B. Reasonably unimpeded operations with slightly restricted maneuverability. Stopped delays are not bothersome at 0.61 to 0.70.

C. Stable operations with somewhat more restrictions in making mid-block lane changes than **LOS B**. Motorists will experience appreciable tension while driving at 0.71 to 0.80.

D. Approaching unstable operations where small increases in volume produce substantial increases in delay and decreases in speed of 0.81 to 0.90.

E. Operations with significant intersection approach delays and low average speeds of 0.91 to 1.00.

6. **Signalized Intersections:** *The TDCM should require proposed signal phasing plus the proposed timings, cycle times, phase timings, vehicle and pedestrian clearance intervals, controller settings, detection zone placements, etc. Projected queue lengths shall be calculated.*

   Engineering studies as required by the MUTCD shall present all the signal warrants even the ones that are not met and they shall include at least a week of 15 minute counts.

QUALIFICATIONS

I present the following qualifications as ample proof that I am more than qualified in Traffic Engineering to make the above comments.

- *Registered Civil Engineer WA, OR, CA, AZ, NV*
- *Registered Traffic Engineer CA, OR*
- *Fellow at Institute of Transportation Engineers*
- *ITE Professional Traffic Operations Engineer, Retired*
- *8 Years Washington State DOT*
  15 Years Consulting Engineer
  18 Years Federal Highway Administration
- *Educator:*
  - *Washington State University*
  - *University of Idaho*
  - *University of Maryland*
  - *National Highway Institute*
- *Retired member National Academies of Science, Engineering and Medicine, Transportation Research Board, Standing Committee on Traffic Signal Systems*
- *International Municipal Signal Association, Level 2 Signal Technician (Retired)*
- *Institute of Electrical and Electronic Engineers (25 years)*
- *41 years of experience in transportation engineering*

CONCLUSION

The Committee is hopeful that the above recommendations will help improve the future health, safety, and welfare of both residents, visitors, and travelers in the unincorporated areas of Jefferson County.

Respectfully submitted,

Paul R. Olson, P.E., T.E.

25587 Conifer Road
STE 105-611
Conifer CO 80433

Conifer and South Evergreen Community Committee

Lindsey Wire

From: Roger Parker <rparker@elkcreekfire.org>
Sent: Monday, November 21, 2022 4:57 PM
To: PZ-Regulation-Revisions
Subject: --{EXTERNAL}-- 22-122945AM Proposed Revisions to the Transportation Design and Construction Manual

CAUTION: This email originated from outside Jefferson County Government. Do not click links or open attachments unless you recognize the sender and know the content is safe.

I have the following comments. I'm not sure what version I'm supposed to be commenting on so I hope you can understand my comments. .

3.7.8 - we support this clarification.

3.7.8.1.3.1 - we support this proposed change to improve the safety of occupant evacuations and fire apparatus access. In addition, this increased clearance on each side of the driveway would provide better sunshine access to help melt snow and ice, especially on excessive grades. I find many driveways that have been approved for grade variances iced over and impassable in the winter because they're in the shade.

3.7.8.1.4 - we support this proposed change. The increase to 15% grade has been our practice for many years with the appropriate fire mitigation system, which is a residential fire sprinkler system. This change would make the increase to 15% automatic without having to obtain approval from the fire districts.

3.7.8.1.7 - we support this proposed change to improve the safety of occupant evacuations and fire apparatus access.

3.7.8.1.4 - Turnarounds. I'd recommend that a maximum cross grade be added to turnarounds. It's very difficult and can be unsafe to turnaround a large fire apparatus when the grade is over 4%. I would also recommend that the location of the approved turnaround be located a minimum of 30 feet away from the building exterior to keep fire apparatus away from the collapse zone and radiant heat. We recently had major paint damage to two fire apparatus that was too close to a house fire.

3.7.8.2.4 Exception - Grades - I'd recommend that P2904 sprinkler systems be added after NFPA 13D. These are nationally recognized fire sprinkler systems that comply with the code.

3.7.8.2.5 - we would support this proposed change if it were modified to add the applicable building, fire, and wildland codes. Since this section covers private roads serving more than one dwelling unit it's important that they also meet fire and wildland codes to improve the safety of occupant evacuations and emergency vehicle access.

3.7.8.3 #4 - I'd recommend that P2904 sprinkler systems be added after NFPA 13D. These are nationally recognized fire sprinkler systems that comply with the code.

3.7.8.3 - Who's responsibility is to determine if the offsite driveway or private road meets the requirements in this section ? At this time we require the applicant to have a civil engineer evaluate the offsite for compliance and provide the fire district a written report.

Let me know if you have questions.

Roger Parker
Fire Marshal
Elk Creek Fire Protection District
11993 Blackfoot Rd./PO Box 607
Conifer, CO 80433
rparker@elkcreekfire.org

Providing Fire Marshal services for the following Fire Districts:

Inter-Canyon Fire Protection District
Genesee Fire Protection District
Indian Hills Fire Protection District
Platte Canyon Fire Protection District
North Fork Fire Protection District

Please email all requests to rparker@elkcreekfire.org

INSPECTIONS ARE CONDUCTED BY APPOINTMENT ONLY. REQUESTS MUST BE MADE 72 HOURS IN ADVANCE BY EMAIL.

Lindsey Wire

From: AUTOMAILER@JEFFCO.US
Sent: Friday, November 18, 2022 10:34 AM
To: Lindsey Wire
Cc: Nathan Seymour
Subject: 22 122945 AM - Agency Response

Follow Up Flag: Follow up
Flag Status: Flagged

Case Number: 22 122945 AM
Case Type: Regulation Amendment
Case Name: Transportation and Construction Manual
Review: Engineer (Development Review)
Results: Complete
Review Comments:
Scheduled End Date: 11/23/2022
Reviewer: Nathan Seymour
Description: Regulations Amendment to the Transportation and Construction Manual

Evergreen Fire/Rescue

1802 Bergen Parkway • Evergreen, Colorado 80439
Phone: 303-674-3145 • Fax: 303-674-8701

November 23, 2022

Jefferson County Planning and Zoning
100 Jefferson County Parkway
Golden, Colorado 80401

The following are comments from Evergreen Fire/Rescue on the proposed changes to the Transportation Design and Construction Manual, Case Number 22-122945AM.

3.7.8 – We support this clarification.

3.7.8.1.2 – We support this proposed change to increase the safety of the residents and first responders.

3.7.8.1.3 - We support this proposed change allowing the 15% grade to be automatic without having to gain approval from the fire district. With this grade increase an automatic fire sprinkler system allows for increased safety of the occupants and mitigates the fire hazard surrounding the structure.

3.7.8.2.2 - We support this proposed change to improve the safety occupants and responders and allow for pullouts to be modified depending on site topography.

3.7.8.2.4 - We would support this proposed change if it were modified to add the applicable building, fire, and wildland codes. Since this section covers private roads serving more than one dwelling unit it's important that they also meet fire and wildland codes to improve the safety of occupant evacuations and emergency vehicle access.

3.7.8.3 – We support these changes but believe that further clarification will be needed to determine the parameters for item 3 and determining a fire district serving the residence safely and effectively.

We support the additional proposed changes on this draft but do not have any further comments.

Respectfully,

Rachel Rush

Rachel Rush
Fire Marshal
Evergreen Fire/Rescue

Foothills Fire Protection District

November 23, 2022

Jefferson County Planning & Zoning
100 Jefferson County Parkway
Golden, Colorado 80419

RE: Foothills Fire TDCM Update Comments

The following are comments from Evergreen Fire/Rescue on the proposed changes to the Transportation Design and Construction Manual, Case Number 22-122945AM.

3.7.8 – We support this clarification.

3.7.8.1.2 – We support this proposed change to increase the safety of the residents and first responders.

3.7.8.1.3 - We support this proposed change allowing the 15% grade to be automatic without having to gain approval from the fire district. With this grade increase an automatic fire sprinkler system allows for increased safety of the occupants and mitigates the fire hazard surrounding the structure.

3.7.8.2.2 - We support this proposed change to improve the safety occupants and responders and allow for pullouts to be modified depending on site topography.

3.7.8.2.4 - We would support this proposed change if it were modified to add the applicable building, fire, and wildland codes. Since this section covers private roads serving more than one dwelling unit it's important that they also meet fire and wildland codes to improve the safety of occupant evacuations and emergency vehicle access.

3.7.8.3 – We support these changes but believe that further clarification will be needed to determine the parameters for item 3 and determining a fire district serving the residence safely and effectively.

We support the additional proposed changes on this draft but do not have any further comments.

Please contact me if you have any questions regarding this information.

Respectfully,

Randon Grimes
Captain/Inspector
Foothills Fire Protection District

To: Heather Gutherless, Jefferson County P&Z Staff
From: Barbara Ford, PE *GeoHydroScience llc* Ford@GeoHydroScience.com
Date November 22, 2022
Subject: Comments and questions on proposed changes to Jeffco's Transportation Construction and Design Manual Case 22-104558AM?

Please add these comments to the public record, and forward to the Board of County Commissioners and Planning Commissioners.

Please also refer to my earlier comments (July 2022 - appended) of the previous P&Z Staff-proposed revisions to the MANUAL.

At the July 2022 Hearing, testimony was offered by four parties, all of whom objected to the proposed revisions for a few reasons. Three of the four are licensed professional engineers (including one Planning Commissioner who is a PE). The PC approved the changes anyway.

Following PC approval, P&Z Staff retracted its revisions before the case proceeded before the Board, and has since offered another set of revisions (October 20, 2022) to the **Transportation Construction and Design Manual** (MANUAL). We were informed that the retraction was based on Staff's intent to consult with an Engineering Contractor as some of us had recommended at the Hearing, although we now understand that no such consultation occurred.

It is my opinion as a licensed Professional Engineer not specializing in road design, that any changes to the MANUAL should only be undertaken by licensed Transportation Engineers in the Jeffco Transportation and Engineering Division, and not by P&Z (engineers and planners), who have demonstrated that Transportation Engineering considerations are outside of their expertise (present to PC, acquire approval, and later retract). I also include a relevant example of Staff's employment of the Section 3.7.8 language from case 19-104466PF in this submittal to support my opinions, interpretations and recommendations.

There are significant problems in the October 20, 2022 proposed MANUAL language revisions. As stated in my July 2022 comments, my concerns are not relevant to private driveways and roads that serve one landowner.

P&Z PROPOSE THAT MANUAL MINIMUM ENGINEERING STANDARDS BE DISCARDED FOR DEVELOPERS WHO CANNOT MEET THE REQUIREMENTS

It is my opinion that Staff (and the PC and Board) continues to misunderstand/misapply the General Provisions of the MANUAL with which the Board is directed to enforce per Colorado Revised Statutes, and the Colorado Supreme Court.[1]

Specifically (from pg. 3 of the MANUAL):

[1] Pennebscott

1.2. Jurisdiction

The requirements of this MANUAL shall apply to all subdividers, developers or other landowners, their employees, agents or contractors designing and constructing public and/or private streets/roads within unincorporated areas of Jefferson County (hereafter called County), except where superseded by State and/or the Federal regulations.

1.3. Purpose and Effect

Presented in this MANUAL are the minimum design and technical criteria for the design and construction of streets/roads.

The MANUAL contains the "**minimum design and technical criteria**", meaning that the Engineering Standards cannot be further reduced, as P&Z Engineering and Planning Staff still propose in Section 3.7.8 (below). It is apparent that the County Attorney's Office too misunderstands the MANUAL requirements and the Board's responsibilities.

"3.7.8.3. ~~The appropriate fire protection district may approve alternative standards for driveways and private roads. Plans shall be sub-mitted that bear the written approval of the appropriate fire protection district.~~The off-site driveway or private road shall meet the requirements as described in this section. If the off-site driveway or private road ~~does not~~ cannot meet the requirements of this section, the following shall be submitted to Planning and Zoning"

…

"3) A certified statement by a qualified Colorado-registered professional engineer indicating that the off-site driveway or private road will be able to serve the residents effectively and safely. This statement shall include a detailed explanation of how an emergency apparatus within the appropriate Fire Protection District will be able to serve a residence safely and effectively. and will be safe for fire apparatus. Such statement shall bear the professional engineer's seal, signature and date.."

The rationale in allowing developers who "cannot" meet even the Minimum Engineering Standards is not supported by the MANUAL, LDRs, State Statutes, and the Board's obligations to make decisions regarding development that furthers "public health, safety, integrity, and general welfare." § 24-67-102(1), C.R.S.2007.

Allowing for diluted and uncertain "engineering designs" for the developers who cannot meet the MANUAL Engineering Standards defies common sense.

Does Jeffco make similar allowances for developers that will use public roads? Does Jeffco allow construction of bridges and tunnels to likewise adhere to a lower "engineering designs" when the developer/constructor cannot meet industry-accepted Engineering Standards? P&Z's (and the Board's and PC's) misapplication of the MANUAL section 3.7.8 is not defensible in my opinion.

P&Z Staff, the PC and the Board ignored the MANUAL Provisions and Engineering Standards in subdivision case 19-104466PF in which the non-compliant, privately owned and privately maintained road across our property that could not be approved by County Engineers, was

"accepted" by the Fire Chief, against our objections. The Fire Chief is not an engineer and was not required to submit engineering plans, contrary to the LDR and MANUAL.

The Fire Chief should be afforded a review, but only to agree that the private road meeting Engineering Standards will in fact. also accommodate emergency equipment. This is not how Staff has employed the Fire Districts so far though.

Because Staff, the PC and the Board disregarded our concerns, we were forced to appeal the Board's decision to the Court (case 2022cv14[2]). We were concerned about development that would increase traffic by a magnitude of approx. 33 to 40 percent up our one-half mile, non-compliant, dirt, steep, windy, privately-owned and privately-maintained road in a high to extreme wildfire area. Furthermore, the Board made no provision that the road ever be compliant, most likely because Staff, the PC and the Board recognized that the Developer/Applicant did not have the legal right to make the road compliant.
I recommend that if the County is to continue to discard of MANUAL Engineering Standards on private roads, that Colorado-licensed Professional Engineers in the Transportation and Engineering Division be prepared to sign and seal such "certified statements" as P&Z proposes, and the County be held accountable for irresponsible decisions.

As identified in my July comments, the proposed language lacks the needed specificity. "Certified statement", "qualified", "effectively and safely", are all undefined and vulnerable to abuse. The language is not enforceable, but the MANUAL Provisions require enforcement by the Board (Section 1.2).

At the July 2022 PC Hearing, one licensed PE Commissioner objecting to that version proposed by Staff, stated that he would not use his seal because of his concern that he would be sued if a failure occurred. His concern is valid. Like that Commissioner, the other (two) Professional Engineers testifying at the Hearing (including Paul Olsen, a Professional Engineer with decades of experience in road engineering design and an Evergreen resident) recognize that roads (and bridges, buildings, tunnels etc.) that are not designed in accordance with Engineering Standards, have a greater risk of failure. We risk losing our licenses and being sued.

In anticipation of comments by Staff and PC for the upcoming Hearing, the following responses are offered herein, because the Public is not afforded a true or effective opportunity at the Hearings based on my observations made in the last few years.

1. The MANUAL is an Engineering Document, and is not intended to be "flexible", as one Planning Commissioner stated, and one Staff Planner expressed, astonishingly, at the July Hearing. Staff Engineer Nathan Seymour also expressed his willingness to employ

[2] Our case also addressed the County's abuse of discretion (based on several attorneys' opinions of legal access (five Colorado law firms)) by its failure to require that the Applicant/Developer demonstrate the requisite legal access, among other Application defects.

"flexibility" in the Engineering designs, even an unspecified design offered by a Fire Chief.

2. Engineering Standards are not reducible or flexible so that accommodations can be made for those developers who cannot meet the Standards. Professional Engineers don't consider flexibility in "engineering designs" that get around the Standards as a Professionally-ethical or acceptable approach to design and construction, because that is precisely how one would go about increasing the likelihood of failure, of roads, bridges, buildings, etc.

3. For the Commissioner who is a licensed Professional Engineer, who expressed that he would not use his seal for projects where developers (his clients) could not meet Engineering Standards, I have the following questions:
    a. Would you use your seal if the "certified statement" complied with the MANUAL Minimum Engineering Standards?
    b. What do you interpret a "certified statement" to mean?
    c. Do you agree that a "qualified" professional structural engineer in Jefferson County, likewise be allowed "flexibility" to design bridges and buildings that don't meet Engineering Standards for some clients who cannot meet Standards?
    d. Do you agree (with Staff) that Road Engineering Standards are only relevant as to whether they can carry emergency equipment, or might the Road Engineering Standards have additional value and significance?
    e. Do you agree that approving a development that will increase traffic on a non-compliant private mountain road that does not meet even the Minimum Engineering Standard in a high to extreme wildfire environment may present safety issues? Who should bear that liability?

P&Z Staff licensed engineers saw no issue in case 19-104466PF, and allowed the Fire Chief to "approve" the non-compliant road to carry significantly more traffic. The PC and Board agreed with Staff.

P&Z STAFF INTEND TO DELAY COMPLIANCE WITH MANUAL ENGINEERING STANDARDS UNTIL AFTER SUBDIVISION APPROVAL

Staff intends that compliance with the Manual Engineering Standards be demonstrated at the time of acquisition of a building permit, instead of prior to Board approval of the development/subdivision. This revision is contradictory to the LDR, the MANUAL, Colorado Revised Statutes, and a Colorado Court of Appeals decision (see below).

From page 3 of the Engineering Manual:

> 1.2. Jurisdiction
>
> The requirements of this MANUAL <u>shall apply to all subdividers, developers ….designing and constructing public and/or private streets/roads within unincorporated</u>

areas of Jefferson County (hereafter called County), except where superseded by State and/or the Federal regulations. The foregoing design and construction of transportation systems are subject to review and approval by the County pursuant to any County regulation or requirement.

1.3. Purpose and Effect

Presented in this MANUAL are the minimum design and technical criteria for the design and construction of streets/roads. All land development or any other proposed construction submitted for approval under the provisions of the LDR and/or ZR as applicable, shall include adequate transportation system analysis and appropriate transportation system design. Such analysis and design shall conform to the criteria set forth herein…."

The Colorado Court of Appeals found that the Board of County Commissioners (in a Mineral County case[3]) abused its discretion because it approved a development where the required provision for access was not secured before awarding its approval of the development.

"III. Access
A. State Law
Section 30-28-133.1, C.R.S.2007, provides:

Subdivision plan or plat-access to public highways. No person **may submit an application for subdivision approval to a local authority UNLESS the subdivision plan or plat provides**, pursuant to section 43-2-147, C.R.S., that all lots and parcels created by **the subdivision will have access** to the state highway system in conformance with the state highway access code."…

"**We do not** read the plain language of this statute to **allow postponing access beyond the application for final subdivision approval.** The statute imposes a condition ("unless") on a current activity ("submit an application") and uses a present tense term ("provides"). This condition would be meaningless if the application need only address how access might be obtained in the future. See Black's Law Dictionary 1224 (6th ed. 1990) ("Provide" is defined as "To make, procure, or furnish for further use, prepare. To supply; to afford; to contribute.")."

"While "will have access" expresses the future tense, in our view that wording reflects the three-phase progression of all regulated land development: (1) planning; (2) approval; and (3) build out. Thus, a subdivision "will have access" only when its internal roads have been completed and connected with a state highway. **But that connection must still be provided for in the application."**

[3] Mineral County, Colorado. From Colorado Court of Appeals,Div. VI.WOLF CREEK SKI CORPORATION, Colorado Wild, and San Luis Valley Ecosystem Council, Plaintiffs-Appellees and Cross-Appellants, v. BOARD OF COUNTY COMMISSIONERS OF MINERAL COUNTY and Leavell-McCombs Joint Venture, Defendants-Appellants and Cross-Appellees. No. 06CA0113. Decided: September 20, 2007

The Court found "… an abuse of discretion because the subdivision might never have the required statutory access". Likewise, the Court would also find unlawful the postponement of the statutory access requirement until the time of issuance of a building permit, as P&Z Staff now proposes. If a developer cannot meet the Minimum Engineering Standards for the access route, then the access has not been secured as State Law requires.

The Court required that the application must have such provisions prior to Board approval.

> "According to James A. Kushner, Subdivision Law and Growth Management § 7.14 (2006), "Final approval constitutes recognition that all conditions for subdivision approval imposed by the local government body have been satisfied." We adopt this definition because **it furthers prudent land use policy**. A final approval creates vested development rights under which a reasonable developer could start construction. See Jafay v. Bd. of County Comm'rs, 848 P.2d 892, 902 (Colo.1993). But if a condition set forth in a purported final approval is not met, then the status of improvements made during the interim would be uncertain."

Furthermore, the Court recognized the burden that such postponements into the future present to objectors and other interested parties (see below), a burden that Jeffco Staff, the PC and the Board do not seem to recognize in a continuing effort to postpone critical considerations and demonstrations until after Board approval.

This was done for numerous issues in case 19-104466PF, and the Board failed to make adequate (or any, in some cases) provisions for them – road, water supply, off-site drainage, etc, leaving a significant burden to us, our neighbors and also to future perspective buyers of the parcels, exactly as the Court of Appeals discourages in the Mineral County case.

> "Such a conditional final approval would also burden the zoning authority to revisit and perhaps modify the condition or extend the time for compliance. **A similar burden would fall on members of the public who opposed the development, but would have to continue appearing at subsequent proceedings to preserve their opposition whenever the zoning authority revisited the condition.** See § 24-67-104(1)(e), C.R.S.2007 (the county resolution must set "forth the procedures pertaining to the application for, hearing on, and tentative and final approval of a planned unit development which shall afford procedural due process to interested parties")."

I hope that presentation of this case (based on a Professional Engineer's interpretation) gives the PC and Board some perspective. But of much greater importance to me, I hope that it is useful for other Jeffco residents who have been burdened or impacted by PC and Board approval of inappropriate development. There are many concerned citizens in Conifer. I also move to have the Board institute term limits on PC.

Thank you.

APPENDIX A

To: Jefferson County P&Z Staff
From: Barbara Ford, PE *GeoHydroScience llc* Ford@GeoHydroScience.com
Date July 26, 2022
Subject: Comments and questions on proposed changes to various Jeffco regulations

SECTION 1 - Case 22-104558AM

Comments and questions regarding proposed language changes to the Proposed Wildfire Regulation Updates including those proposed in the County Transportation Design and Construction Manual.

Some questions and comments submitted during the community meeting remain unacknowledged and unaddressed in the log of comments posted. During the meeting P&Z's Heather Gutherless said that an engineer made the changes but she was unable to answer submitted questions. They are repeated below.

I have no comments regarding Engineering Standards as applied to private driveways serving one property.

If these proposed changes apply to private roads and/or driveways serving multiple property owners, it is inappropriate for the County to prioritize the interests of the "unable landowner/developer" over the interests of the other property owners without a legal basis.

It is proposed that the County Transportation Design and Construction Manual be revised as follows, apparently as related to the Wildfire Regulations:

3.7.8.3. The offsite driveway or private road shall meet the requirements as described in this section or t~~T~~he appropriate fire protection district may approve an alternative ~~standards~~ design allowing deviation from the standard when the property owner does not have the ability to make Improvements to the offsite property. ~~for driveways and private roads~~. ~~Plans shall be submitted that bear the~~ W~~w~~ritten approval of all alternative standards is required of the appropriate fire protection district.

1. It is unclear why Jeffco Engineers displace the burden of road Engineering Standards to the Fire Protection Districts (FPD).
2. The proposed changes will reduce road safety, including in wildfire prone areas by:
    a. Eliminating the need for private roads intended to carry increased traffic from development to meet County Engineering Standards;
    b. eliminating the requirement that plans be submitted by the Fire Protection District;
    c. instead allowing the FPD to submit a "design" that will not be approved by a Colorado-licensed Professional Transportation Engineer; and

d. allow development with increased traffic on private roads that do not meet County Engineering Standards and were not designed for such traffic load.
e. Please provide examples of how a FPD might offer alternate designs when
    i. The road is steeper than the maximum grade;
    ii. The road is narrower than the required widths;
    iii. The road is not paved;
    iv. The road is lined with significant tree canopy;
    v. There are inadequate fire truck turnarounds – size, locat, frequency; and
    vi. There are inadequate fire truck pull offs/outs are inadequate – size location, frequency, etc.
    vii. and how the proposed alternate design, that is inferior to Engineering Standards, may be considered acceptable anyway, and to whom is should be acceptable.
f. Please identify the threshold conditions/characteristics under which an alternate design will be considered unacceptable? ie X Width, X grade, X pullouts, etc.

3. What is meant by the language "when the property owner does not have the ability to make improvements to the offsite property"?
    a. What allowances are considered for such "unable" landowner/developers?

4. The language regarding "written approval" is unclear.
    a. Who must provide written approval?
    b. What must their qualifications be?
    c. Who at the County will accept this written approval?
    d. Please provide sufficient detail.

Additional proposed changes include the following:

3.7.8.2.5 Maximum grade of fifteen (15) percent on straight sections for a maximum length of one hundred (100) feet provided the appropriate fire mitigation systems are in place based on the applicable building code.

Why is an increase in maximum road grade from 10 to 15 percent being considered when the County Engineering Standards formerly required a maximum of 10 percent on straight sections, and 12 percent where the dip of the terrain bears South 60 degrees East and South 45 degrees West?

SECTION 2 - Case Number: 21-109265AM
Proposed Land Disturbance Revisions to the Zoning Resolution and the Land Development Regulation

Case Number: 21-109265AM
Case Manager: Nathan Seymour

Formerly several constraints were identified, but now it appears that only a threshold area is used to trigger the need for a permit/Notice of Intent.

Why is the County relaxing the requirements triggering the need for such permits? Were the former regulations too burdensome ?

Thank you.

Barbara Ford, PE

To: Heather Gutherless, Jefferson County P&Z Staff
From: Barbara Ford, PE *GeoHydroScience llc* Ford@GeoHydroScience.com
Date November 22, 2022
Subject: Comments and questions on proposed changes to Jeffco's Transportation Construction and Design Manual Case 22-104558AM?

Please add these comments to the public record, and forward to the Board of County Commissioners and Planning Commissioners.

Please also refer to my earlier comments (July 2022 - appended) of the previous P&Z Staff-proposed revisions to the MANUAL.

At the July 2022 Hearing, testimony was offered by four parties, all of whom objected to the proposed revisions for a few reasons. Three of the four are licensed professional engineers (including one Planning Commissioner who is a PE). The PC approved the changes anyway.

Following PC approval, P&Z Staff retracted its revisions before the case proceeded before the Board, and has since offered another set of revisions (October 20, 2022) to the **Transportation Construction and Design Manual** (MANUAL). We were informed that the retraction was based on Staff's intent to consult with an Engineering Contractor as some of us had recommended at the Hearing, although we now understand that no such consultation occurred.

It is my opinion as a licensed Professional Engineer not specializing in road design, that any changes to the MANUAL should only be undertaken by licensed Transportation Engineers in the Jeffco Transportation and Engineering Division, and not by P&Z (engineers and planners), who have demonstrated that Transportation Engineering considerations are outside of their expertise (present to PC, acquire approval, and later retract). I also include a relevant example of Staff's employment of the Section 3.7.8 language from case 19-104466PF in this submittal to support my opinions, interpretations and recommendations.

There are significant problems in the October 20, 2022 proposed MANUAL language revisions. As stated in my July 2022 comments, my concerns are not relevant to private driveways and roads that serve one landowner.

P&Z PROPOSE THAT MANUAL MINIMUM ENGINEERING STANDARDS BE DISCARDED FOR DEVELOPERS WHO CANNOT MEET THE REQUIREMENTS

It is my opinion that Staff (and the PC and Board) continues to misunderstand/misapply the General Provisions of the MANUAL with which the Board is directed to enforce per Colorado Revised Statutes, and the Colorado Supreme Court.[1]

Specifically (from pg. 3 of the MANUAL):

[1] Pennebscott

1.2. Jurisdiction

The requirements of this MANUAL shall apply to all subdividers, developers or other landowners, their employees, agents or contractors designing and constructing public and/or private streets/roads within unincorporated areas of Jefferson County (hereafter called County), except where superseded by State and/or the Federal regulations.

1.3. Purpose and Effect

Presented in this MANUAL are the minimum design and technical criteria for the design and construction of streets/roads.

The MANUAL contains the "**minimum design and technical criteria**", meaning that the Engineering Standards cannot be further reduced, as P&Z Engineering and Planning Staff still propose in Section 3.7.8 (below). It is apparent that the County Attorney's Office too misunderstands the MANUAL requirements and the Board's responsibilities.

"3.7.8.3. ~~The appropriate fire protection district may approve alternative standards for driveways and private roads. Plans shall be sub-mitted that bear the written approval of the appropriate fire protection district.~~The off-site driveway or private road shall meet the requirements as described in this section. If the off-site driveway or private road ~~does not~~ cannot meet the requirements of this section, the following shall be submitted to Planning and Zoning"

…

"3) A certified statement by a qualified Colorado-registered professional engineer indicating that the off-site driveway or private road will be able to serve the residents effectively and safely. This statement shall include a detailed explanation of how an emergency apparatus within the appropriate Fire Protection District will be able to serve a residence safely and effectively. and will be safe for fire apparatus. Such statement shall bear the professional engineer's seal, signature and date.."

The rationale in allowing developers who "cannot" meet even the Minimum Engineering Standards is not supported by the MANUAL, LDRs, State Statutes, and the Board's obligations to make decisions regarding development that furthers "public health, safety, integrity, and general welfare." § 24-67-102(1), C.R.S.2007.

Allowing for diluted and uncertain "engineering designs" for the developers who cannot meet the MANUAL Engineering Standards defies common sense.

Does Jeffco make similar allowances for developers that will use public roads? Does Jeffco allow construction of bridges and tunnels to likewise adhere to a lower "engineering designs" when the developer/constructor cannot meet industry-accepted Engineering Standards? P&Z's (and the Board's and PC's) misapplication of the MANUAL section 3.7.8 is not defensible in my opinion.

P&Z Staff, the PC and the Board ignored the MANUAL Provisions and Engineering Standards in subdivision case 19-104466PF in which the non-compliant, privately owned and privately maintained road across our property that could not be approved by County Engineers, was

"accepted" by the Fire Chief, against our objections. The Fire Chief is not an engineer and was not required to submit engineering plans, contrary to the LDR and MANUAL.

The Fire Chief should be afforded a review, but only to agree that the private road meeting Engineering Standards will in fact. also accommodate emergency equipment. This is not how Staff has employed the Fire Districts so far though.

Because Staff, the PC and the Board disregarded our concerns, we were forced to appeal the Board's decision to the Court (case 2022cv14[2]). We were concerned about development that would increase traffic by a magnitude of approx. 33 to 40 percent up our one-half mile, non-compliant, dirt, steep, windy, privately-owned and privately-maintained road in a high to extreme wildfire area. Furthermore, the Board made no provision that the road ever be compliant, most likely because Staff, the PC and the Board recognized that the Developer/Applicant did not have the legal right to make the road compliant.
I recommend that if the County is to continue to discard of MANUAL Engineering Standards on private roads, that Colorado-licensed Professional Engineers in the Transportation and Engineering Division be prepared to sign and seal such "certified statements" as P&Z proposes, and the County be held accountable for irresponsible decisions.

As identified in my July comments, the proposed language lacks the needed specificity. "Certified statement", "qualified", "effectively and safely", are all undefined and vulnerable to abuse. The language is not enforceable, but the MANUAL Provisions require enforcement by the Board (Section 1.2).

At the July 2022 PC Hearing, one licensed PE Commissioner objecting to that version proposed by Staff, stated that he would not use his seal because of his concern that he would be sued if a failure occurred. His concern is valid. Like that Commissioner, the other (two) Professional Engineers testifying at the Hearing (including Paul Olsen, a Professional Engineer with decades of experience in road engineering design and an Evergreen resident) recognize that roads (and bridges, buildings, tunnels etc.) that are not designed in accordance with Engineering Standards, have a greater risk of failure. We risk losing our licenses and being sued.

In anticipation of comments by Staff and PC for the upcoming Hearing, the following responses are offered herein, because the Public is not afforded a true or effective opportunity at the Hearings based on my observations made in the last few years.

1. The MANUAL is an Engineering Document, and is not intended to be "flexible", as one Planning Commissioner stated, and one Staff Planner expressed, astonishingly, at the July Hearing. Staff Engineer Nathan Seymour also expressed his willingness to employ

[2] Our case also addressed the County's abuse of discretion (based on several attorneys' opinions of legal access (five Colorado law firms)) by its failure to require that the Applicant/Developer demonstrate the requisite legal access, among other Application defects.

"flexibility" in the Engineering designs, even an unspecified design offered by a Fire Chief.

2. Engineering Standards are not reducible or flexible so that accommodations can be made for those developers who cannot meet the Standards. Professional Engineers don't consider flexibility in "engineering designs" that get around the Standards as a Professionally-ethical or acceptable approach to design and construction, because that is precisely how one would go about increasing the likelihood of failure, of roads, bridges, buildings, etc.

3. For the Commissioner who is a licensed Professional Engineer, who expressed that he would not use his seal for projects where developers (his clients) could not meet Engineering Standards, I have the following questions:
    a. Would you use your seal if the "certified statement" complied with the MANUAL Minimum Engineering Standards?
    b. What do you interpret a "certified statement" to mean?
    c. Do you agree that a "qualified" professional structural engineer in Jefferson County, likewise be allowed "flexibility" to design bridges and buildings that don't meet Engineering Standards for some clients who cannot meet Standards?
    d. Do you agree (with Staff) that Road Engineering Standards are only relevant as to whether they can carry emergency equipment, or might the Road Engineering Standards have additional value and significance?
    e. Do you agree that approving a development that will increase traffic on a non-compliant private mountain road that does not meet even the Minimum Engineering Standard in a high to extreme wildfire environment may present safety issues? Who should bear that liability?

P&Z Staff licensed engineers saw no issue in case 19-104466PF, and allowed the Fire Chief to "approve" the non-compliant road to carry significantly more traffic. The PC and Board agreed with Staff.

P&Z STAFF INTEND TO DELAY COMPLIANCE WITH MANUAL ENGINEERING STANDARDS UNTIL AFTER SUBDIVISION APPROVAL

Staff intends that compliance with the Manual Engineering Standards be demonstrated at the time of acquisition of a building permit, instead of prior to Board approval of the development/subdivision. This revision is contradictory to the LDR, the MANUAL, Colorado Revised Statutes, and a Colorado Court of Appeals decision (see below).

From page 3 of the Engineering Manual:

> 1.2. Jurisdiction
>
> The requirements of this MANUAL <u>shall apply to all subdividers, developers ….designing and constructing public and/or private streets/roads within unincorporated</u>

areas of Jefferson County (hereafter called County), except where superseded by State and/or the Federal regulations. The foregoing design and construction of transportation systems are subject to review and approval by the County pursuant to any County regulation or requirement.

1.3. Purpose and Effect

Presented in this MANUAL are the minimum design and technical criteria for the design and construction of streets/roads. All land development or any other proposed construction submitted for approval under the provisions of the LDR and/or ZR as applicable, shall include adequate transportation system analysis and appropriate transportation system design. Such analysis and design shall conform to the criteria set forth herein…."

The Colorado Court of Appeals found that the Board of County Commissioners (in a Mineral County case[3]) abused its discretion because it approved a development where the required provision for access was not secured before awarding its approval of the development.

"III. Access
A. State Law
Section 30-28-133.1, C.R.S.2007, provides:

Subdivision plan or plat-access to public highways. No person **may submit an application for subdivision approval to a local authority UNLESS the subdivision plan or plat provides**, pursuant to section 43-2-147, C.R.S., that all lots and parcels created by **the subdivision will have access** to the state highway system in conformance with the state highway access code."…

"**We do not** read the plain language of this statute to **allow postponing access beyond the application for final subdivision approval.** The statute imposes a condition ("unless") on a current activity ("submit an application") and uses a present tense term ("provides"). This condition would be meaningless if the application need only address how access might be obtained in the future. See Black's Law Dictionary 1224 (6th ed. 1990) ("Provide" is defined as "To make, procure, or furnish for further use, prepare. To supply; to afford; to contribute.")."

"While "will have access" expresses the future tense, in our view that wording reflects the three-phase progression of all regulated land development: (1) planning; (2) approval; and (3) build out. Thus, a subdivision "will have access" only when its internal roads have been completed and connected with a state highway. **But that connection must still be provided for in the application."**

[3] Mineral County, Colorado. From Colorado Court of Appeals,Div. VI.WOLF CREEK SKI CORPORATION, Colorado Wild, and San Luis Valley Ecosystem Council, Plaintiffs-Appellees and Cross-Appellants, v. BOARD OF COUNTY COMMISSIONERS OF MINERAL COUNTY and Leavell-McCombs Joint Venture, Defendants-Appellants and Cross-Appellees. No. 06CA0113. Decided: September 20, 2007

The Court found "… an abuse of discretion because the subdivision might never have the required statutory access". Likewise, the Court would also find unlawful the postponement of the statutory access requirement until the time of issuance of a building permit, as P&Z Staff now proposes. If a developer cannot meet the Minimum Engineering Standards for the access route, then the access has not been secured as State Law requires.

The Court required that the application must have such provisions prior to Board approval.

> "According to James A. Kushner, Subdivision Law and Growth Management § 7.14 (2006), "Final approval constitutes recognition that all conditions for subdivision approval imposed by the local government body have been satisfied." We adopt this definition because **it furthers prudent land use policy**. A final approval creates vested development rights under which a reasonable developer could start construction. See Jafay v. Bd. of County Comm'rs, 848 P.2d 892, 902 (Colo.1993). But if a condition set forth in a purported final approval is not met, then the status of improvements made during the interim would be uncertain."

Furthermore, the Court recognized the burden that such postponements into the future present to objectors and other interested parties (see below), a burden that Jeffco Staff, the PC and the Board do not seem to recognize in a continuing effort to postpone critical considerations and demonstrations until after Board approval.

This was done for numerous issues in case 19-104466PF, and the Board failed to make adequate (or any, in some cases) provisions for them – road, water supply, off-site drainage, etc, leaving a significant burden to us, our neighbors and also to future perspective buyers of the parcels, exactly as the Court of Appeals discourages in the Mineral County case.

> "Such a conditional final approval would also burden the zoning authority to revisit and perhaps modify the condition or extend the time for compliance. **A similar burden would fall on members of the public who opposed the development, but would have to continue appearing at subsequent proceedings to preserve their opposition whenever the zoning authority revisited the condition.** See § 24-67-104(1)(e), C.R.S.2007 (the county resolution must set "forth the procedures pertaining to the application for, hearing on, and tentative and final approval of a planned unit development which shall afford procedural due process to interested parties")."

I hope that presentation of this case (based on a Professional Engineer's interpretation) gives the PC and Board some perspective. But of much greater importance to me, I hope that it is useful for other Jeffco residents who have been burdened or impacted by PC and Board approval of inappropriate development. There are many concerned citizens in Conifer. I also move to have the Board institute term limits on PC.

Thank you.

APPENDIX A

To: Jefferson County P&Z Staff
From: Barbara Ford, PE *GeoHydroScience llc* Ford@GeoHydroScience.com
Date July 26, 2022
Subject: Comments and questions on proposed changes to various Jeffco regulations

SECTION 1 - Case 22-104558AM

Comments and questions regarding proposed language changes to the Proposed Wildfire Regulation Updates including those proposed in the County Transportation Design and Construction Manual.

Some questions and comments submitted during the community meeting remain unacknowledged and unaddressed in the log of comments posted. During the meeting P&Z's Heather Gutherless said that an engineer made the changes but she was unable to answer submitted questions. They are repeated below.

I have no comments regarding Engineering Standards as applied to private driveways serving one property.

If these proposed changes apply to private roads and/or driveways serving multiple property owners, it is inappropriate for the County to prioritize the interests of the "unable landowner/developer" over the interests of the other property owners without a legal basis.

It is proposed that the County Transportation Design and Construction Manual be revised as follows, apparently as related to the Wildfire Regulations:

3.7.8.3. The offsite driveway or private road shall meet the requirements as described in this section or t~~T~~he appropriate fire protection district may approve an alternative ~~standards~~ design allowing deviation from the standard when the property owner does not have the ability to make Improvements to the offsite property. ~~for driveways and private roads~~. ~~Plans shall be submitted that bear the~~ W~~w~~ritten approval of all alternative standards is required of the appropriate fire protection district.

1. It is unclear why Jeffco Engineers displace the burden of road Engineering Standards to the Fire Protection Districts (FPD).
2. The proposed changes will reduce road safety, including in wildfire prone areas by:
    a. Eliminating the need for private roads intended to carry increased traffic from development to meet County Engineering Standards;
    b. eliminating the requirement that plans be submitted by the Fire Protection District;
    c. instead allowing the FPD to submit a "design" that will not be approved by a Colorado-licensed Professional Transportation Engineer; and

d. allow development with increased traffic on private roads that do not meet County Engineering Standards and were not designed for such traffic load.
e. Please provide examples of how a FPD might offer alternate designs when
    i. The road is steeper than the maximum grade;
    ii. The road is narrower than the required widths;
    iii. The road is not paved;
    iv. The road is lined with significant tree canopy;
    v. There are inadequate fire truck turnarounds – size, locat, frequency; and
    vi. There are inadequate fire truck pull offs/outs are inadequate – size location, frequency, etc.
    vii. and how the proposed alternate design, that is inferior to Engineering Standards, may be considered acceptable anyway, and to whom is should be acceptable.
f. Please identify the threshold conditions/characteristics under which an alternate design will be considered unacceptable? ie X Width, X grade, X pullouts, etc.

3. What is meant by the language "when the property owner does not have the ability to make improvements to the offsite property"?
    a. What allowances are considered for such "unable" landowner/developers?

4. The language regarding "written approval" is unclear.
    a. Who must provide written approval?
    b. What must their qualifications be?
    c. Who at the County will accept this written approval?
    d. Please provide sufficient detail.

Additional proposed changes include the following:

3.7.8.2.5 Maximum grade of fifteen (15) percent on straight sections for a maximum length of one hundred (100) feet provided the appropriate fire mitigation systems are in place based on the applicable building code.

Why is an increase in maximum road grade from 10 to 15 percent being considered when the County Engineering Standards formerly required a maximum of 10 percent on straight sections, and 12 percent where the dip of the terrain bears South 60 degrees East and South 45 degrees West?

SECTION 2 - Case Number: 21-109265AM
Proposed Land Disturbance Revisions to the Zoning Resolution and the Land Development Regulation

Case Number: 21-109265AM
Case Manager: Nathan Seymour

Formerly several constraints were identified, but now it appears that only a threshold area is used to trigger the need for a permit/Notice of Intent.

Why is the County relaxing the requirements triggering the need for such permits? Were the former regulations too burdensome ?

Thank you.

Barbara Ford, PE

Lindsey Wire

From: Chuck Newby <cosecc.co@gmail.com>
Sent: Tuesday, December 6, 2022 10:34 AM
To: Nathan Seymour; Lindsey Wire
Cc: wsufans; Heather Gutherless; Cassidy Clements
Subject: Re: --{EXTERNAL}-- Committee comments RE proposed updates to TDCM...

Follow Up Flag: Follow up
Flag Status: Completed

Good Morning Nathan and Lindsey,

With respect to updates to the TDCM, what is the update process and timeline going forward?

Best,

-Chuck
Conifer & South Evergreen Community Committee

On Nov 21, 2022, at 1:06 PM, Heather Gutherless <hgutherl@co.jefferson.co.us> wrote:

Thank you, Chuck! I am forwarding these comments onto Nathan Seymour and Lindsey Wire, who are managing this regulation update.

Heather Gutherless, AICP
Planning Supervisor, Long Range Planning
Planning and Zoning Division
Jefferson County
o 303-271-8716
hgutherl@jeffco.us | Find us on the web: planning.jeffco.us

Planning and Zoning is open to the public and we are offering both virtual and in-person appointments. For the convenience and safety of the public and our staff, virtual appointments are encouraged. Many staff are still working remotely to provide online and virtual services Monday through Thursday. County offices are closed on Fridays. Please schedule appointments [jeffco-planning-and-zoning-hqorx.appointlet.com] and submit applications online. Go to planning.jeffco.us for more information.
<image001.png>

From: Chuck Newby <cosecc.co@gmail.com>
Sent: Monday, November 21, 2022 12:53 PM
To: Heather Gutherless <hgutherl@co.jefferson.co.us>
Cc: Chris OKeefe <cokeefe@co.jefferson.co.us>; Steve Durian <sdurian@co.jefferson.co.us>; Cassidy Clements <cclement@co.jefferson.co.us>; wsufans <wsufans@wispertel.net>
Subject: --{EXTERNAL}-- Committee comments RE proposed updates to TDCM...

CAUTION: This email originated from outside Jefferson County Government. Do not click links or open attachments unless you recognize the sender and know the content is safe.

Heather,

On behalf of our Committee, please find attached written comments relating to Jefferson County Transportation Design and Construction Manual (TDCM) proposes updates written by Paul Olson P.E. & T.E. — please distribute to the appropriate parties.

All the best,

-Chuck
Conifer & South Evergreen Community Committee

On Sep 13, 2022, at 1:26 PM, Heather Gutherless <hgutherl@co.jefferson.co.us> wrote:

Hi Paul – Thanks for this information. I have saved it to the file so that it will be easy to bring up at the hearing tomorrow evening.

We have a new process for testifying that we are going to "soft launch" at tomorrow's PC hearing. It is pre-registration for testifying at the hearing. I'm not sure if you already saw this on our website, but www.jeffco.us/testimony will take you to a form where you can sign up to testify. You'll want to make sure you are signing up for the correct case. This will not preclude people from showing up and testifying, but it will allow us to get an idea of how many people to expect and for people to share presentations they may have with staff, like you just did. (You don't need to share it again.) Plus we will take the testimony of those that pre-registered first and then others that attend. Registration does close 24 hours prior to the hearing.

Thanks,

Heather Gutherless, AICP
Planning Supervisor, Long Range Planning
Planning and Zoning Division
Jefferson County
o 303-271-8716

hgutherl@jeffco.us | Find us on the web: planning.jeffco.us

Planning and Zoning is open to the public and we are offering both virtual and in-person appointments. For the convenience and safety of the public and our staff, virtual appointments are encouraged. Many staff are still working remotely to provide online and virtual services Monday through Thursday. County offices are closed on Fridays. Please schedule appointments [jeffco-planning-and-zoning-hqorx.appointlet.com] and submit applications online. Go to planning.jeffco.us for more information.

<image001.png>

From: PRO <wsufans@wispertel.net>
Sent: Tuesday, September 13, 2022 10:18 AM
To: Cassidy Clements <cclement@co.jefferson.co.us>; Heather Gutherless <hgutherl@co.jefferson.co.us>
Cc: 'Chuck Newby' <cosecc.co@gmail.com>
Subject: --{EXTERNAL}-- 9/14 Planning commission hearing

CAUTION: This email originated from outside Jefferson County Government. Do not click links or open attachments unless you recognize the sender and know the content is safe.

I would like to make the attached presentation to the commission tomorrow.

Paul R. Olson P.E., T.E.
6642 S Valley Drive
Morrison, CO 80465
303-885-7275

<CoSECC Comments RE Proposed Updates to the TDCM -final- 11-21-22.pdf>

Lindsey Wire

From: AUTOMAILER@JEFFCO.US
Sent: Tuesday, December 6, 2022 9:14 AM
To: Lindsey Wire
Cc: EOBRIEN@JEFFCO.US
Subject: 22 122945 AM - Agency Response

Follow Up Flag: Follow up
Flag Status: Flagged

Case Number: 22 122945 AM
Case Type: Regulation Amendment
Case Name: Transportation and Construction Manual
Review: Open Space
Results: No Comment (no further review)
Review Comments:
Scheduled End Date: 11/23/2022
Reviewer: Elizabeth Stoner
Description: Regulations Amendment to the Transportation and Construction Manual

Lindsey Wire

From: Dylan Monke
Sent: Thursday, September 29, 2022 2:48 PM
To: Lindsey Wire; Heather Gutherless; Nick Nelson; Russell Clark; Nathan Seymour; Cassidy Clements
Subject: Re: Regulation Advisory Panel - October 10th Meeting

Follow Up Flag: Follow up
Flag Status: Flagged

Hey Lindsey,

Maybe y'all already talked about this, but assuming these are approved as written, how will it be communicated that a Sprinkler system is required if grades over 15% are approved for on-site driveways? (3.7.1.8.4. & 3.7.8.2.5) Is this something that could be noted painfully obvious for the review planner in the GPA to ease the review of the subsequent BP?

Perhaps an even easier option would be to require the same letter from the homeowner to install the system that is required for off-site driveways of the same grade?

"4) a written statement from the property owner that a fire sprinkler system will be installed per NFPA 13D at the time of Building Permit."

Also love what y'all did with the traffic impact analysis sections. Excited see imagine proposed mitigations and to have so many fun tables for applicants to complete. Anyway we could require them to evaluate bicycle trip generation and parking as well? Certainly a personal wish list item so feel free to disregard.

Thanks,
Dylan

From: Lindsey Wire <lwire@co.jefferson.co.us>
Sent: Thursday, September 29, 2022 2:26 PM
To: mlrichardson@apc.us.com <mlrichardson@apc.us.com>; 1812eagle@gmail.com <1812eagle@gmail.com>; childreth@foxrothschild.com <childreth@foxrothschild.com>; Ethan Watel <ethan@baselinecorp.com>; dmsmn5@aol.com <dmsmn5@aol.com>; phorn@martinmartin.com <phorn@martinmartin.com>; deb@carneylaw.net <deb@carneylaw.net>; Dean Dalvit <dean@evstudio.com>; Glenn Douglass <douglassengineering1@gmail.com>; ynotbev@aol.com <ynotbev@aol.com>; jveres0@gmail.com <jveres0@gmail.com>; Brooks, Kelly <kbrooks@westmetrofire.org>; Heather Gutherless <hgutherl@co.jefferson.co.us>; Dylan Monke <dmonke@co.jefferson.co.us>; Nick Nelson <nnelson@co.jefferson.co.us>; Russell Clark <rclark@co.jefferson.co.us>; Nathan Seymour <nseymour@co.jefferson.co.us>; Mike Schuster <mschuste@co.jefferson.co.us>; Pat OConnell <poconnel@co.jefferson.co.us>; chris@ballprop.com <chris@ballprop.com>; Chris OKeefe <cokeefe@co.jefferson.co.us>; Kristin Cisowski <kcisowsk@co.jefferson.co.us>; Cassidy Clements <cclement@co.jefferson.co.us>; Rachel Rush <rrush@evergreenfirerescue.com>; Melodie Clayton <mclayton@co.jefferson.co.us>; Dixie Shear <dshear@co.jefferson.co.us>; Gary Campbell <gcampbel@co.jefferson.co.us>; Shaun Kyser <skyser@co.jefferson.co.us>; meredith ward <meredithaward@msn.com>; Christina Lane <clane@co.jefferson.co.us>; Kelly Dunne <kdunne@co.jefferson.co.us>
Subject: Regulation Advisory Panel - October 10th Meeting

Hi Everyone,

Please follow this link to view the draft amendments to the Transportation Design and Construction Manual which will be discussed at the October 10th Regulation Advisory Panel Meeting.

Thank you,

Lindsey Wire, P.E.
Planning & Zoning
Engineering Supervisor
303.271.8717
lwire@jeffco.us | **planning.jeffco.us**

JEFFERSON COUNTY COLORADO

Planning and Zoning is open to the public and appointments are strongly encouraged. Virtual and in-person appointments are available Monday through Thursday. County offices are closed on Fridays. Please schedule appointments and submit applications online. Go to planning.jeffco.us for more information.

JEFFERSON COUNTY COLORADO
Public Health

Public Health
303.232.6301 | jeffco.us

MEMO

TO: Lindsey Wire
Jefferson County Planning and Zoning Division

FROM: Tracy Volkman
Jefferson County Environmental Health Services Division

DATE: November 16, 2022

SUBJECT: Case #22-122945 AM
Transportation And Construction Manual
Jefferson County Planning & Zoning Division

Jefferson County Public Health reviewed the proposed changes to the Transportation and Construction Manual and have no comments at this time. We support the proposed changes made by Planning and Zoning.

Lindsey Wire

From: AUTOMAILER@JEFFCO.US
Sent: Monday, February 13, 2023 12:41 PM
To: Lindsey Wire
Cc: Mark Weiden
Subject: 22 122945 AM - Agency Response

Follow Up Flag: Follow up
Flag Status: Flagged

Case Number: 22 122945 AM
Case Type: Regulation Amendment
Case Name: Transportation and Construction Manual
Review: Road & Bridge
Results: No Comment (no further review)
Review Comments:
Scheduled End Date: 11/23/2022
Reviewer: Mark Weiden
Description: Regulations Amendment to the Transportation and Construction Manual

COLORADO
Department of Transportation

Permit Unit – Traffic & Safety
2829 W. Howard Place
Denver, CO 80204

MEMORANDUM

TO: Lindsey Wire, Jefferson County Planning

FROM: Rick Solomon, Permit Supervisor

DATE: Nov 3, 2022

RE: Referral 22-122945 AM Roadway cross sections

Not sure how to even offer comments on this.

Please note that most CDOT Rights of Way in Jefferson County are functionally classified, by which we would look to our rules and standards outlined in Code regarding access spacing, and a long list of design elements & considerations. Usually, if/when County standards are better and safer than CDOT's we will go with the stronger standards. Our standards do not define RoW widths, as we rely on and respect those of the local agencies. For example, if a landscaped center median is needed, that would be defined by the local agency, not CDOT. This is a frequent mis-conception by developers. When a plan like the 2018 West Connect PEL was adopted by your local officials, and it already has cross sections within it, should those not be used instead of these?

Under the referral materials forward to us, we see but are not quite clear of the distinction and rule of when a suburban roadway design is warranted that is different from the rural and mountain roadway design. We are not sure for example, how the county determines when the major collector with curb, gutter & sidewalk is needed, and when it is not.

Recent instructions CDOT staff is given from the State political level (Transportation Commission) is to advocate for more Multi-modal accommodations in our rights of Way, offering choices over driving. In great part this translates to share the road and sidewalks. We noted that many of the profiles do not show these elements and seem to have a minimum threshold based on ADT. That seems to be counter-intuitive since the purpose of multi-modal is to lessen the dependency of vehicles for short trips. As a suggestion: CDOT has put forward a checklist of strategies called TDM, which describes some of these public improvements – which these roadway cross sections might engage or adapt to.

I wish to share three examples in Jefferson County that might illustrate some real question of how these translate (i.e. which template applies?):

- A heavily traveled 2-lane corridor with bus service (such as SH 75-Platte River Rd) Should there not be a sidewalk and auxiliary lane for a bus pull out and pedestrian landings? (noted: this road has multi-jurisdictions)
- A heavily traveled 2 lane mountain corridor such as SH 74 through Evergreen. Should there be a sidewalk on both sides and maybe room for parallel parking?
- The collector of Rainbow Hills Rd – currently under consideration to be relocated & rebuilt located inside a split diamond interchange of I-70, would it be under the standard of the file called Temp 5, or Temp 11 or 12 noting the developer has a park-n-ride and tourist oriented development proposed – with a lot of pedestrians anticipated.

If I was a property owner, I would like to know on either corridor example above which minor arterial or collector standard applies.

CDOT uses the most current M & S Standards on roadway design. Please note they were recently updated/revised on Sep 6, 2022.

When the County eventually adopts these roadway standards, CDOT request a full version for our reference. When referrals are sent for CDOT comment and input, <u>especially subdivision platting</u>, it would be most helpful to identify the roadway classification of any CDOT abutting RoW so we are in-sync with these standards.

Lastly and very important, is that CDOT follows the Utility Accommodation Code and our rights-of way allow wet and dry utilities to share and cross our right of way under certain rules. Along interstates and expressways, we discourage any manholes in the roadway and push utilities as far to the outside of right of way as possible. Roadways with higher speeds generally greater than 40 mph, be very careful of allowing manholes in the roadway. Routine access into a manhole translates into lane closures and delays, which we try to avoid by better design. Relocating utilities is a very costly factor in roadway design and rebuild. It is recommended you add a general note about what rules should be followed to accommodate utilities in each roadway cross section. Indeed, it is complicated when storm pipes, traffic signals and traffic lights exist there too and it all has to fit.

Please advise if this is the kind of feedback you seek? I can solicit other staff members throughout our CDOT Region 1 for input, but every engineer will have their own specialty and interest of concern.

SOUTH METRO FIRE RESCUE
FIRE MARSHAL'S OFFICE

Lindsey Wire, P.E.
Jefferson County Planning and Zoning
100 Jefferson County Parkway, Suite 3550
Golden, Colorado 80419
303.271.8717
lwire@jeffco.us

Project Name: Transportation Design And Construction Manual
Project File #: **22-122945AM**
S Metro Review # REFOTH22-00216

Review date: November 17, 2022

Plan reviewer: Jeff Sceili
720-989-2244
Jeff.Sceili@Southmetro.org

Project Summary: Regulation Amendment

Code Reference: 2018 Fire Code Edition, 2018 Building Code Edition

South Metro Fire Rescue (SMFR) has reviewed the above proposed regulation amendments and has no comments.

JEFFERSON COUNTY COLORADO
Transportation and Engineering

P&Z REFERRAL T&E RESPONSE

To: Lindsey Wire
Case #:22-122945 AM
Case Name, Address, or PIN: Transp. Design & Const. Manual

From: Transportation & Engineering
Due Date: November 23, 2022

Amanda Attempt Result & Attachments:
☐ Comments Sent (no further review)
☐ Comments Sent (request re-review)
☒ No Comment (no further review)

Drainage

☐ T&E is currently working on a project in the area. See attached information.
☐ No concerns.
☐ Other Notes:

Right-of-Way / Roadway Corridor Expansion Projects

☒ **Corridor Projects / ROW**

☐ Land owner will need to refund the county $ for ROW purchased in for
This amount ***must*** be paid before plat is recorded and / or plans are approved and released for construction.
☐ Documentation attached in AMANDA. ☐ Documentation to follow.
☐ Additional ROW needed for upcoming T&E project. Plan sheet attached with required width / area.
☐ Fee-in-lieu of adjacent roadway construction preferred, due to planned construction by the county. Please have the applicant submit a cost estimate.
☒ No Concerns.
☐ Other Notes:

Traffic Operations / Transportation Planning

☐ **Transportation Planning**
☐ **Transportation Engineering**

	Included in referral	Reviewed	
		No	Yes
Traffic Study	☐	☐	☐
Signage & Striping Plan	☐	☐	☐
Traffic Signal Plans	☐	☐	☐
Trails or Sidewalks	☐	☐	☐
Street / Road Plans	☐	☐	☐

☐ No Concerns.
☐ Other Notes:

Additional Comments

☐ **Name:**

Comments:

☐ **Name:**

Comments:

Jefferson County Transportation Design & Construction Manual

JEFFERSON COUNTY, COLORADO PLANNING AND ZONING DIVISION

Revision Dates

The Transportation Design & Construction Manual, formerly known as Roadway Design & Construction Manual, adopted by the Board of County Commissioners of Jefferson County, Colorado on March 21, 1995, has since been amended on the following dates:

December 5, 1995

May 12, 1998

March 23, 1999

October 1, 2002

July 1, 2003

November 25, 2003

December 5, 2006

May 20, 2008

October 13, 2009

November 24, 2015

July 17, 2018

December 17, 2019

XX-XX-XX

Jefferson County Planning and Zoning Division

100 Jefferson County Parkway, Suite 3550, Golden, Colorado 80419

303-271-8700 ▪ http://planning.jeffco.us

Formatted: Font: (Default) +Body (Calibri)

Formatted: Normal, Left

Formatted: Font: (Default) +Body (Calibri), Not Italic

Formatted: Normal

Table of Contents

Chapter 1 General Provisions

1.1. Short Title
1.2. Jurisdiction
1.3. Purpose and Effect
1.4. Enactment Authority
1.5. Amendment and Revisions
1.6. Enforcement Responsibility
1.7. Review and Approval
1.8. Interpretation
1.9. Relationship to Other Standards

Chapter 2 Construction Drawing Requirements

2.1. General Requirements
2.2. Cover Sheet
2.3. Plan
2.4. Profile
2.5. Cross Sections
2.6. Details
2.7. Standard Notes

Chapter 3 Design and Technical Criteria

3.1. General
3.2. Street/Road Types
3.3. Functional Classification
3.4. Standard Templates
3.5. Horizontal Alignment
3.6. Vertical Alignment
3.7. Intersection Spacing, Vision Clearance Triangle, ~~and~~ Sight Distance, Driveways and Private Streets/Roads
3.8. Drainage
3.9. Traffic Control
3.10 Miscellaneous

Chapter 4 Pavement Design and Technical Criteria

4.1. General Requirements
4.2. Pavement Design Report Submittal
4.3. Subgrade Investigation
4.4. Pavement Design Criteria
4.5. Pavement Design Procedure
4.6. Material Specifications

Chapter 5 Construction Specifications and Standards

5.1. Construction Specifications
5.2. Construction Standards

Definitions

Examples: Standard Templates

Examples: Construction Standards

Design Nomographs for Pavements

Transportation Studies

Resolution

Chapter I

General Provisions

1.1. Short Title

These regulations together with all future amendments shall be known as the "Jefferson County Transportation Design and Construction Manual" (hereafter called MANUAL) as referenced in the Jefferson County Land Development Regulation (hereafter called LDR) and the Jefferson County Zoning Resolution (hereafter called ZR).

1.2. Jurisdiction

The requirements of this MANUAL shall apply to all subdividers, developers or other landowners, their employees, agents or contractors designing and constructing public and/or private streets/roads within unincorporated areas of Jefferson County (hereafter called County), except where superseded by State and/or the Federal regulations. The foregoing design and construction of transportation systems are subject to review and approval by the County pursuant to any County regulation or requirement.

1.3. Purpose and Effect

Presented in this MANUAL are the minimum design and technical criteria for the design and construction of streets/roads. All land development or any other proposed construction submitted for approval under the provisions of the LDR and/or ZR as applicable, shall include adequate transportation system analysis and appropriate transportation system design. Such analysis and design shall conform to the criteria set forth herein. Technical criteria not specifically addressed in this MANUAL shall follow the provisions of the American Association of State Highway and Transportation Officials (AASHTO) "A Policy of Geometric Design of Highways and Streets", as amended; the Colorado Department of Transportation (CDOT) Design Standards, as amended; and the Manual on Uniform Traffic Control Devices (MUTCD), as amended.

1.4. Enactment Authority

The LDR has been adopted pursuant to the authority conferred within: Article 28 of Title 30 (County Planning); Article 2 of Title 43 (State, County, and City Highway Systems); Article 20 of Title 29 (Land Use Control and Conservation); and other applicable sections of the Colorado Revised Statutes, as amended.

This MANUAL is adopted by resolution of the Board of County Commissioners, as the authority provided by which the County promulgates the LDR.

1.5. Amendment and Revisions

These criteria may be amended as new technology is developed and/or if experience gained in the use of this MANUAL indicates a need for revision. Amendments and revisions will be made by resolution of the Board of County Commissioners.

1.6. Enforcement Responsibility

It shall be the obligation of the Board of County Commissioners acting through the Department of Development and Transportation to enforce the provisions of this MANUAL.

1.7. Review and Approval

The County will review all submittals for compliance with this MANUAL. An approval by the County does not relieve the owner, engineer, or designer from responsibility of ensuring that the calculations, plans, specifications and construction are in compliance with the MANUAL and accepted engineering practices.

1.8. Interpretation

In interpretation and application of the provisions of the MANUAL, the following shall govern:

1.8.1. The provisions shall be regarded as the minimum requirements for the protection of public health, safety, comfort, convenience, prosperity, and welfare of the residents of the County.

1.8.2. Whenever a provision of this MANUAL and any other provision of the LDR or any provision in any law, ordinance, resolution, rule, or regulation of any kind, contains any restriction covering any of the same subject matter, whichever restrictions are more restrictive or impose higher standards of requirements shall govern.

1.8.3. This Jefferson County Transportation Design and Construction Manual was adopted by the Board of County Commissioners on March 21, 1995. Any amendments to this MANUAL shall be immediately effective upon its adoption by the Board of County Commissioners. All applications shall be subject to the provisions of this MANUAL that are in effect at the time of the formal application submittal, unless otherwise specified by the Board of County Commissioners resolution.

1.9. Relationship to Other Standards

If the State or Federal Government imposes stricter criteria, standards, or requirements, these shall be incorporated into the County's requirement after due process and public hearings needed to modify the County's regulations and standards.

Chapter 2

Construction Drawing Requirements

2.1. General Requirements

Construction drawings must be submitted in Portable Document Format (PDF) unless otherwise approved for hard copy submittal, to scale, shall be a complete package, which includes all details and documentation necessary for the construction of the proposed improvements. The plans shall be prepared by, or under the direction of a professional engineer, registered in the State of Colorado, and qualified in the field of civil engineering.

The final set of plans (hard copy) for each drawing shall be 24" x 36", unless otherwise approved by the County, and shall contain a title block, sheet number, scale, north arrow, and date.

The developer's engineer shall comply with Colorado Revised Statute 9-1.5-101 through 9-1.5-108 "Excavation Requirements" when the nature of work proposed (1) will involve a contract with Jefferson County (this shall include, but not be limited to binding agreements such as permits and Subdivision Improvement Agreements); (2) will involve primarily Horizontal Construction and not the construction of buildings; (3) will involve excavation that exceeds two (2) feet in depth and that is a contiguous 1,000 square feet, or involve Utility Boring; and (4) requires the design services of a licensed professional engineer. Existing and Proposed Subsurface Utilities shall be identified on the design plans in accordance with ASCE 38 Standards. For more information please reference the Colorado Revised Statutes and Federal Highway Administration websites.

2.2. Cover Sheet

A cover sheet should be provided with each submittal which contains the following:

1. A vicinity map at a minimum scale of 1" - 2000' which shows the location and name of all arterial streets/roads within one mile of the proposed development and all streets/roads within the proposed development.
2. A legend, scale, and north arrow.
3. General notes.
4. Index of sheets.
5. Seal, signature, and date of the professional engineer responsible for plan preparation.
6. A permanent benchmark description and location based on USGS datum. At least one permanent benchmark must be established within each subdivision or filing thereof, located on public property.

If a cover sheet is not provided, the above information shall be included on the first sheet of the submittal.

2.3. Plan

The plan view shall include but not be limited to, the following:

1. The scale shall be a minimum of one (1) inch to fifty (50) feet and shown on the plan.
2. Locations and dimensions of existing and proposed improvements, property lines, easements, and Right-of-Way. Plan view limits shall extend 100 linear feet before the Point of Beginning, and 100 linear feet after the Construction End. Each Point of Beginning and Construction End shall be clearly labeled and identified with stationing.
3. Names of streets/roads.
4. Survey line ties to section or quarter corners.
5. Survey lines and centerline stationing. Stationing shall be equated to flowline stationing at horizontal radius curves, cul-de-sacs, and other departures from normal roadway cross sections.
6. Centerline stations for all intersecting roadways and commercial driveways.
7. Existing and proposed street/road improvements (sidewalk, curb, gutter, pavement limits, bridges, culverts, inlets, manholes, asphalt core sample locations, guardrails, curb ramps, etc.). Existing improvements shall be clearly depicted by a dashed line; proposed improvements shall be depicted by a solid line and or greyscale or hatching. Plans shall include existing and proposed limits for asphalt pavement, including areas of milling and overlaying, as well as new asphalt placement. All items shall have a corresponding legend.
8. Curve layout including radius, degree of curve, deflection angle, length of curve, point of curvature, and point of tangency.
9. Elevations and station shall be noted for all curb returns, points of curvature, points of tangency, and high or low points of all vertical curves. The existing and proposed percent cross slope shall be repeated on the plan sheets at select points. Include elevations and cross slopes, existing and proposed, for all lanes of intersection improvements, regardless if construction is planned for opposing streets.
10. Rate of super elevation.
11. Typical template(s) for streets/roads.
12. Match lines and consecutive sheet numbers.
13. Key map.
14. A minimum of one (1) permanent bench mark, based on United States Geological Survey's datum, fully described, within each subdivision or filing thereof.

15. Existing and proposed utilities and structures, including but not limited to: water, fire hydrants, sanitary sewer, storm sewer, telephone, gas, electric, cable television, fiber optic. Existing utility pothole information shall be organized on a separate plan sheet to identify location, depth, utility type, pipe size and material, conflicts with proposed improvements, and other information obtained during subsurface investigation. Subsurface investigation shall include new laterals or service connections to existing main lines and be clearly shown on separate plan sheets. *

16. Stations and critical elevations of all utility and drainage appurtenances. *

17. Construction phasing. *

18. Major Collector and/or Arterial intersection design at a scale of one (1) inch to twenty (20) feet. *

19. Traffic signal design at a scale of one (1) inch to twenty (20) feet. *

20. Signing and Striping Plan.

20. Noise attenuation measures/details. *

21. Trails. *

22. Sediment and erosion control measures/details. *

23. Landscaping. *

*May be included on separate plan sheets.

2.4. Profile

The profile shall include, but not be limited to the following:

1. The scale shall be a minimum of one (1) inch to five (5) feet for street profiles and a minimum of one (1) inch to ten (10) feet for road profiles, and be shown on the plan.

2. Existing (dashed line) and proposed (solid line) grades.

3. Continuous centerline stationing for the entire portion of the existing and proposed roadway shown in the plan. Clearly label centerline stationing for all intersecting roadways and commercial driveways.

4. All design elevations shall be centerline, flowline, back of curb, or lip of gutter.

5. Vertical curve data including length of curve, P.V.C., P.V.T., P.V.I., beginning and end grades. All vertical curves shall be symmetrical.

6. Curb return profiles at a horizontal scale of 1" = 10' and vertical scale of 1" = 1'.

7. All existing curbs, gutters, sidewalks, culverts or storm sewers, ditches and irrigation structures and asphalt adjacent to the proposed design, as well as the same such features that are 100 linear feet before the Point of Beginning and continue for 100 linear feet beyond the Construction End. Basis for existing grades shall be as-built elevations at intervals not to exceed fifty (50) feet. All existing grades, locations and alignments shall be field surveyed by a licensed Professional Land Surveyor for design of the proposed improvements. Previously approved designs are not an acceptable means of establishing existing grades.

8. Separate flowline or top of curb profiles shall be provided for all proposed curb and gutter, including for design of cul-de-sacs and any other departure from a 2% street/road cross slope. In addition, cross-sections at intervals not to exceed 50 feet are required if a departure from a normal cross-slope is proposed.

9. Existing and proposed utilities. *

*May be included on separate plan sheets.

2.5. Cross Sections

1. On widening or matching projects, or as required by the Jefferson County Planning & Zoning, cross sections of the proposed new construction and existing improvements within the Right-of-Way shall be provided at survey stationing at a maximum of fifty foot

intervals and at locations of cross culverts. The scale shall correspond to that used on the plan and profile.

2. Cross sections shall identify both the existing or matching percent cross slope of the roadway, as well as percent proposed cross slope.

3. Cross sections shall identify the elevation at the point of match for widening projects for each station interval.

4. Cross sections shall identify the proposed new road segment in gray scale or other hatching.

5. Cross sections shall identify the proposed pavement treatment or alterations, such as mill and overlay of the match point; as well as the proposed new pavement section and respective lifts asphalt.

6. Core samples shall be collected from the existing roadway prior to construction to determine the existing asphalt depth and condition. Such cores shall not exceed 4-inches in diameter and shall be collected at the centerline of the existing road, as well as edge of existing asphalt. The existing depth of asphalt shall be represented on the cross sections.

7. Proposed widening shall avoid cross sections with gross inverts or peaks at the match point. Normal roadway cross sections shall follow AASHTO design criteria that limit the minimum cross slope to 1.5% and maximum cross slope to 3.0%. Cross slope grade change shall note exceed +/- 0.5% as measured every 50 linear feet along the station intervals. There shall be no change in existing cross slope greater than +/- 1.0% from the match point to the proposed edge of asphalt, or the flow line or the lip of the gutter pan.

Refer to Figure 2-1 "Sample Cross Section" below:

Figure 2-1 - Sample Cross Section

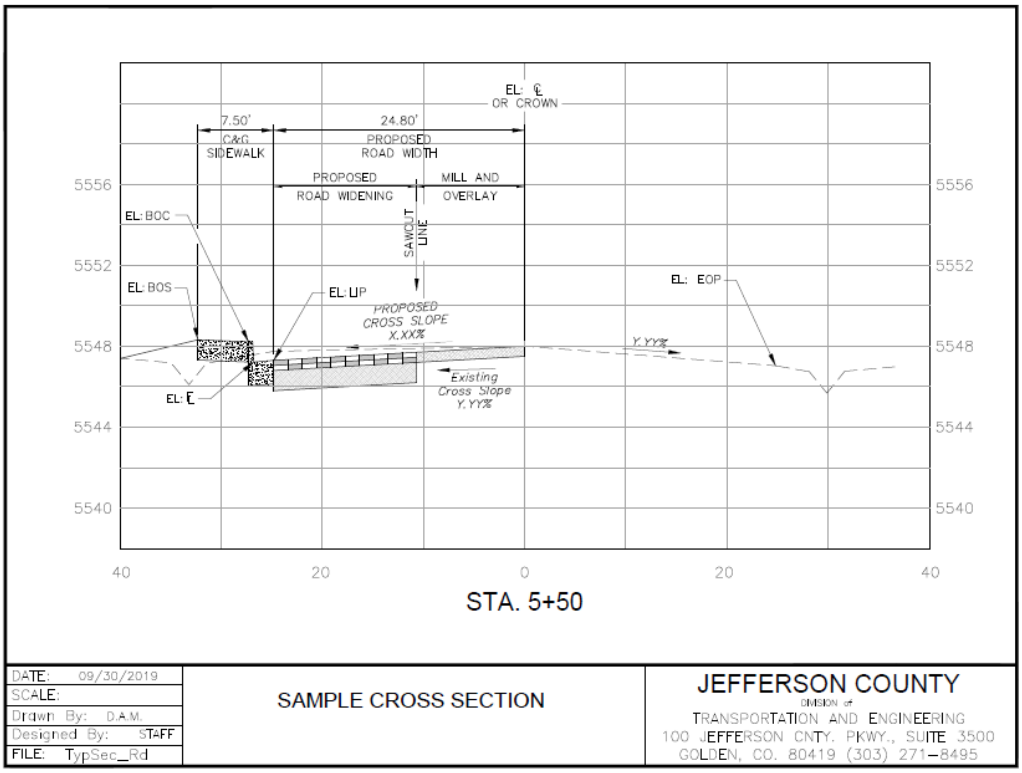

2.6. Details

Jefferson County or CDOT standard details may be referenced as applicable. Where these standards cannot be used, a separate detail sheet shall be provided with an explanation detailing why these standard details are not being used.

2.7. Standard Notes

The following general notes shall appear on the cover sheet or the first sheet of the plans for all street/road construction plan packages.

1. A Construction Permit from Transportation and Engineering is required prior to commencing work within County Right-of-Way.
2. Any work within State Right-of-Way will require a State Construction Permit.
3. The contractor shall notify Transportation and Engineering at least 24 hours prior to starting construction within the Right-of-Way.
4. The contractor shall provide all signs, barricades, flagmen, lights, or other devices necessary for safe construction traffic control in accordance with the current edition of the MUTCD and as modified by the Colorado Supplement to the MUTCD. A construction traffic control plan shall be submitted to and approved by Transportation and Engineering prior to the issuance of any construction permit for work within County Right-of-Way.
5. The contractor shall contact the Utility Notification Center of Colorado at least 48 hours prior to construction.
6. Construction specification: Current edition of the Colorado Department of Transportation Standard Specifications for Road and Bridge Construction, special provisions and revisions thereto, and as amended by Chapter 5 of this MANUAL.
7. The subgrade material shall be scarified or removed to a depth required by Jefferson County per information obtained from laboratory tests and/or as required in the Pavement Design Report. Additives or approved material may be required if the native material is unsatisfactory. The subgrade shall be compacted to a minimum density and moisture content range of 2 percent below optimum to 2 percent above as determined in accordance with AASHTO designation T180 or T99 and in accordance with the Standard Specifications Section 203.07.
8. Class 6 aggregate base course for shoulders shall be placed and compacted 95 percent modified Proctor Test (AASHTO T180) after placement of asphalt.
9. Existing asphalt pavement shall be straight sawcut or bladecut when adjoining with new asphalt pavement. SS-1 tack coat shall be applied to all surfaces.
10. Structural section, including subbase and asphalt, shall be constructed according to the Final Pavement design that has been prepared by the developer's engineer, and approved by Transportation and Engineering according to Chapter 4 of this MANUAL. Existing structural section at the match point shall comply with the minimum Full Depth Asphalt thickness identified in Table 4.3 "Minimum Pavement Sections" of this MANUAL for the respective road classification, regardless of the original thickness of asphalt and / or subbase.

The following notes shall appear in addition to the above for all street construction, as applicable:

1. Concrete may be placed by machine methods if all finish lines are within 1/8" + tolerance of the lines shown on the plans. The flowline must be free draining and comply with this MANUAL.
2. One half (1/2) inch expansion joint material shall be installed when abutting any existing concrete or a fixed structure.
3. The contractor is advised to first obtain inspection of forms by Transportation and Engineering before placing concrete curb, gutter, sidewalk, inlets, and/or other concrete drainage structures.

Chapter 3

Design and Technical Criteria

3.1. General

This section sets forth the minimum design and technical criteria to be used in the preparation of all street/road construction plans. All street/road design shall be in accordance with the current edition of AASHTO Geometric Design of Highways and Streets, unless modified herein.

For this regulation, streets shall be used in the Plains and roads shall be used in the Mountains, except as indicated below:

3.1.1 Roads may be allowed in the Plains in locations with slopes greater than 15%, subject to approval by Planning and Zoning.

3.1.2 Streets may be required in the following Mountains locations as directed by Planning and Zoning: 1) Areas where urban development is projected based on Community Plans designations, 2) Areas where curb and gutter would be needed to mitigate drainage impacts.

3.2. Street/Road Types

3.2.1 Public Streets/Roads: Streets or roads that are owned and maintained by the City, County or State for public use.

3.2.2 Private Streets/Roads: Streets or roads that are owned, maintained, or restricted for the use by a person, group of people, or non-governmental entity.

3.2.3 Non-Maintained Streets/Roads in County ROW: Streets or roads that are owned by the County for public use, but are not constructed to a County public standard and are not County maintained.

3.3. Functional Classification

Jefferson County has adopted a Major Thoroughfare Plan based on traffic volumes, existing and/or zoned land use, and anticipated growth. The Major Thoroughfare Plan designates streets/roads as freeway, parkway, principal arterial, minor arterial, major collector, or collector.

3.3.1. Freeway: A freeway serves major regional traffic movements and carries the highest traffic volume of all classifications. A freeway is planned to have four to six through lanes and may have frontage roads. The movement of traffic takes precedence over access. Access is fully controlled and is allowed only to other freeways or to arterials by grade separated interchanges. Opposing movements on a freeway are separated by a raised or depressed median. Pedestrians and bicycle traffic are physically separated from the travel lanes. A freeway may be developed as a parkway with at-grade intersections as a first phase. Freeways are typically in State jurisdiction.

Design Speed: Special Design Required

3.3.2. Parkway: A parkway serves major regional traffic movements and carries high traffic volumes. A parkway is planned to have four to six through lanes. The movement of traffic takes precedence over access. Access is fully controlled and allowed only to major collector classifications or higher. Grade separation at major intersections is preferred over traffic signals. Opposing movements on a parkway are separated by a raised or depressed median. Pedestrians and bicycle traffic are physically separated from the travel lanes unless a bicycle lane or paved shoulder is designated per the Jefferson County Bicycle Plan as amended.

Design Speed: 40 - 50 MPH

3.3.3. Arterial.

3.3.3.1. Principal Arterial: A principal arterial serves major regional traffic movements and carries high traffic volumes. A principal

arterial is planned to have four to six through lanes in the Plains and four through lanes in the Mountains. The movement of traffic takes precedence over access. Access is controlled and allowed to collectors and higher class facilities is preferred, but some restricted access to major developments may be allowed. Opposing movements are usually separated by a raised, depressed, or painted median. Pedestrians and bicycle traffic may be carried on detached walks and trails unless a bicycle lane or paved shoulder is designated per the Jefferson County Bicycle Plan as amended.

Design Speed: 35 - 45 MPH

3.3.3.2. Minor Arterial: A minor arterial serves intracommunity traffic and carries moderate traffic volumes. Minor arterials are planned to have four lanes in the Plains. In the Mountains, minor arterials are planned to have two lanes, plus turn lanes and passing or climbing lanes where warranted. Neither the movement of traffic nor access takes precedence. Reasonable access is allowed except for private residential driveways. Opposing movements are generally separated by a raised, depressed, or painted median in the Plains. Pedestrians and bicycle traffic are usually carried on a detached walk or an adjacent trail unless a bicycle lane or paved shoulder is designated per the Jefferson County Bicycle and Pedestrian Plan, as amended.

Design Speed: 30 - 40 MPH

3.3.4. Major Collector: A major collector serves intracommunity traffic and carries moderate traffic volumes. Major collectors are planned to have two lanes, plus turn lanes where warranted, in the Plains and the Mountains. Neither the movement of traffic nor access takes precedence. Reasonable access is allowed except for private residential driveways. Opposing movements are generally separated by a median/turn lane. Pedestrians and bicycle traffic are usually carried on a detached walk or an adjacent trail unless a bicycle lane or paved shoulder is designated per the Jefferson County Bicycle and Pedestrian Plan, as amended.

Design Speed: 30 - 40MPH

3.3.5. Collector: A collector serves neighborhood traffic movements over short distances, generally accessing arterials and major collectors. A collector has two lanes, plus turn lanes where warranted, in the Plains and two lanes in the Mountains. Access takes precedence over the movement of traffic. Reasonable access is allowed except for private residential driveways. Opposing movements are not physically separated. Pedestrian traffic is handled on attached or detached sidewalks in the Plains. No special accommodation is made for bicycle traffic.

Design Speed: 25 - 30 MPH

3.3.5. Local: A local street or road serves neighborhood traffic over very short distances to higher class roadways. A local street or road has two travel lanes. It is always paved in the Plains and usually paved in the Mountains. Access to adjacent land is its primary purpose. All types of access are allowed. Opposing movements are not physically separated. Pedestrian traffic is handled on attached or detached sidewalks in the Plains. No special accommodation is made for bicycle traffic.

Design Speed: 15 - 25 MPH

3.4. Standard Templates

The following templates reflect the minimum section for each street/road classification and for cul-de-sacs. Any additional requirements including, but not limited to, acceleration/deceleration lanes and left turn lanes are not shown.

Template Number	Description	Typical Volume Range in Average Daily Traffic (ADT)	Right-of-Way Width (Feet)
Public Street/Road Templates			
1	Principal Arterial Street	Greater than 25,000	~~130'~~109-127'
2	Minor Arterial Street	15,000 to 25,000	~~100'~~87-101'

3	Major Collector Street	8,000 to 15,000	~~78'~~77-91'
4	Collector Street (36' FL to FL) with Attached Sidewalks	1,000 to 8,000	~~50'~~46-54'
5	Collector Street (36' FL to FL) with Detached Sidewalks	1,000 to 8,000	~~37'~~ 32-40' + 20' easement for sidewalks, maintenance and traffic signs
6	Local Street (34' FL to FL) with Attached Sidewalks	Less than 1,000	50'
7	Local Street (34' FL to FL) with Detached Sidewalks	Less than 1,000	35' + 20' easement for sidewalks, maintenance and traffic signs
8	Local Street (28' FL to FL) with Attached Sidewalks	Less than 350	45'
9	Local Street (28' FL to FL) with Detached Sidewalks	Less than 350	30' + 18' easement for sidewalks, maintenance and traffic signs
Template Number	Description	Typical Volume Range in Average Daily Traffic (ADT)	Right-of-Way Width (Feet)
Public Street/Road Templates			
10	Minor Arterial Road	Greater than 8,000	70'
11	Major Collector Road	2,000 to 8,000	50', 60' for turn lanes
12	Collector Road	1,000 to 2,000	50'
13	Local Road	Less than 1,000	50'
14	Street Cul-de-sac – Option 1 Street Cul-de-sac – Option 2 Street Cul-de-sac – Option 3	See LDR, Section 15	90' 100' 112'
15	Partial Cul-de-sac for Local Streets	See LDR, Section 15	45'R
16	Offset Cul-de-sac for Local Streets	See LDR, Section 15	90'
17	Cul-de-sac for Local Roads	See LDR, Section 15	90'
Private street/road templates and Non-maintained streets/roads in County ROW templates *			
18	Driveway/Private Street/Road & Non-maintained Street/Road in County ROW (No Parking)	See LDR, Section 15	20' minimum
19	Pull Out for Private Road	N/A	n/a
20	Hammerhead Turnaround for Driveway/Private Road	See LDR, Section 15	varies
21	Hammerhead Turnaround for Private Street	See LDR, Section 15	varies

Commented [LW1]: To split out and create separate templates for driveway, private street, and private road

** The "non-maintained streets/roads in County ROW" templates can only be used if the following provisions apply:*

1. *The County is not holding a guarantee a previous development process that would require the construction of a County public standard street/road in the ROW.*
2. *The County does not wish to have the street/road constructed to a County public standard.*
3. *The street/road is not identified on the Jefferson County Major Thoroughfare Plan.*

3.5. Horizontal Alignment

3.5.1. Horizontal Curves: Minimum curve radii for a normal crown section based on design speed are summarized in the table below.

Design Speed (mph)	Minimum Curve Radius (feet)
15	50
20	107
25	198
30	333
35	510
40	762
45	1039
50	Special Design

3.5.1.1. For collector roads, the centerline line radius may be reduced to a minimum of one hundred (100) feet, provided, however, that on a curve with a centerline radius less than four hundred (400) feet, the maximum grade shall be reduced by one (1) percent for each one hundred (100) feet or fraction thereof the radius is reduced.

3.5.2. Super Elevation: Super elevation is required for curves on all principal and minor arterial streets/roads and selected collector streets/roads. Minimum horizontal curve radius, rate of super elevation, and lengths of tangent runout and super elevation runoff shall be in accordance with the recommendations of the current edition of AASHTO Geometric Design of Highways and Streets.

Super elevation shall not be used on local streets, but may be used on local roads.

3.5.3. Sight Distance: Horizontal alignment must provide at least the minimum stopping sight distance for the design speed at all points. This includes visibility at intersections, as well as around curves and roadside encroachments. Where an object off the traveled surface restricts sight distance, the minimum radius of curvature is determined by the stopping sight distance. A likely obstruction may be a bridge abutment, retaining wall, cut slope, landscaping, or side or corner of a building. In considering sight distance, it shall be assumed a 6'-0" fence (as measured from finished grade) exists along all property lines except in the sight distance triangles required at all intersections. Minimum stopping sight distance (measured from the centerline of the inside lane) shall be as follows for centerline grades equal or less than 3%:

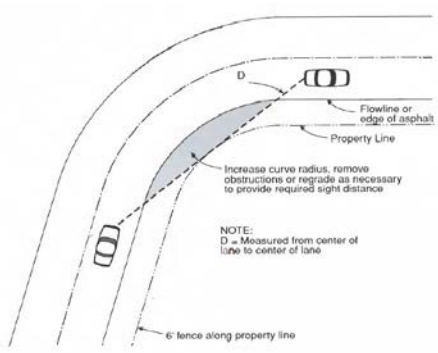

Design Speed (mph)	Stopping Sight Distance (d) (feet)
15	80
20	115
25	150
30	200
35	250
40	325
45	400
50	475

For grades greater than 3%, stopping distance shall be in accordance with the recommendations of the current edition of AASHTO Geometric Design of Highways and Streets.

3.6. Vertical Alignment

3.6.1. Grades: The minimum grade for all new streets and roads is 2%, except within a sag. A minimum flowline grade of 1.5% shall be maintained around all full and partial cul-de-sac bulbs, except within a sag. Planning and Zoning may approve grades as low as 1% if existing conditions make it infeasible to construct a minimum of 1.5%. The maximum grade for all public streets is 6.0% and for public roads is 8.0%. The maximum grade for public roads may be increased to 10% where the dip of the natural terrain bears between South 60° East and South 45° West.

3.6.2. Intersection Grades: The maximum grade at intersections shall be in accordance with the following figure and table. Grades and lengths apply to the street/road controlled by a stop sign. At signalized and uncontrolled intersections, grades and lengths apply to all legs of the intersection.

	Through Street / Road		
Intersection Street/Road	Local	Collector	Major Collector/Arterial
Local	50' @ 4%	100' @ 4%	100' @ 4%
Collector	-	100' @ 3%	200' @ 2%
Major Collector/Arterial	-	-	200' @ 2%

3.6.3. Changing Grades. Continuous grade changes shall not be permitted. The use of grade breaks in lieu of vertical curves is discouraged; however, if a grade break is necessary and the algebraic difference in grade (A) does not exceed four-tenths (0.40) of a percent along the street/road, the grade break will be permitted.

The maximum grade break allowed at the point of tangency at a curb return for local and collector streets shall be two (2) percent and a maximum of one (1) percent for arterial streets.

3.6.4. Vertical Curves. All vertical curves shall be symmetrical. A vertical curve shall be used when the algebraic difference in grade (A)

equals or is greater than four-tenths (0.40) of a percent. The minimum grade within a sag (sump) vertical curve is five-tenths (0.50) of a percent. All vertical curves shall be labeled, in the profile with curve length (L) and K value (= L/A). The minimum K values for crest and sag vertical curves shall be in accordance with the following table:

	Minimum K Value	
Design Speed (mph)	Crest	Sag
30	30	40
35	50	50
40	80	70
45	120	90
50	160	110

3.6.5. Connection with Existing Streets/Roads

3.6.5.1. Connection with existing roadways shall be smooth transitions conforming to normal vertical curve criteria (see Section 3.6.4. of these standards) if the algebraic difference in grade (A) between the existing and proposed grade exceeds four-tenths (0.40) of a percent. When a vertical curve is used to make this transition, it shall be fully accomplished prior to the connection with the existing improvement, and comply with the grade requirements at intersection approaches.

3.6.5.2. Existing grade shall be shown for at least three hundred (300) feet with field verified as-builts showing stations and elevations at twenty-five (25) foot intervals. In the case of connection with an existing intersection, these as-builts are to be shown within a three hundred (300) foot radius of the intersection. This information will be included in the plan and profile that show the proposed roadway.

3.6.5.3. Previously approved designs for the existing improvement are not an acceptable means of establishing existing grades; however, they are to be referenced on the construction plan where they occur.

3.6.5.4. The basis of the as-built elevations shall be the same as the design elevations (both flowline or top of curb, etc.) unless otherwise approved by Planning and Zoning.

3.7. Intersection Spacing, Vision Clearance Triangle, ~~and~~ Sight Distance, Driveways and Private Streets/Roads

3.7.1. Intersection Spacing: Spacing of intersections (measured centerline to centerline) shall be in accordance with the following table:

Proposed Street/Road: Existing Street/Road	Minimum Separation (feet)
Local: Local or Collector	175
Local: Arterial or Major Collector	500
Collector: Collector	230
Collector: Major Collector or higher	1000
Major Collector: Major Collector	660
Major Collector: Arterial or higher	1320
Arterial: Arterial or higher	5,280'

3.7.2. Vision Clearance Triangle: The table below shows where a vision clearance triangle must be provided.

Required	Not Required
Street/Road Intersections	Intersection of internal drive isles in non-residential*
Intersections of non-residential driveways with streets/roads	Multi-family and townhome developments*
Intersections of multifamily and/or townhome residential drive isles with streets/roads	
Intersections of street/roads and railroad Right-of-Way	

** Layout of these types of developments should not impede a driver's ability to see on-coming vehicles and pedestrians at intersections*

As illustrated below, the vision clearance triangle must provide an unobstructed view across the triangle formed by the Right-of-Way/property line or easement line adjacent to a street or road as illustrated. The vision clearance triangle may also be formed by the flowline adjacent to a street or road as illustrated below subject to approval by Planning and Zoning. The approval of the vision clearance triangle formed by a flowline is predicated on a fully built-out street or road and existing Right-of-Way that exceeds the Right-of-Way requirements in the Land Development Regulation. Within the area of the triangle, there shall be no fence, wall, landscaping, structure or other obstruction to view more than ~~forty-two~~thirty-six (~~42~~36) inches in height~~, or trees with foliage or signs lower than eight (8) feet in height~~ (measured from the flowline or edge of pavement on the street/road surface). The allowable height of ~~forty-two~~thirty-six (~~42~~36) inches is determined by measuring from the flowline or edge of pavement, as applicable. For example, the grade on a lot within the triangle is 12'' higher than the flow line of a gutter, the allowable height of landscaping would be 30" on the property.

Note that if there is any conflict between this provision (3.7.2) and the Sight Distance provision (3.7.2.1) of this MANUAL, the Sight Distance provision shall take precedence. Note that if a physical median exists or is proposed at an access point restricting or eliminating a conflict point, the Vision Clearance Triangle requirements will not apply where no conflict points exist.

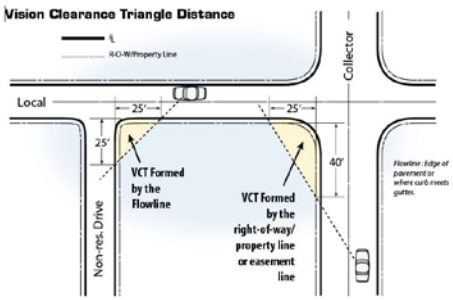

Street/Road Classification	Required Distance from Intersection
Non-residential drive	25'
Local	25'
Collector	40'
Major Collector/Arterial/Parkway	55'
Railroad Right-of-Way	55'

3.7.2.1. Sight Distance: At any street/road intersections or multifamily residential, commercial and industrial site driveways, an unobstructed view as defined above must be provided across the area formed by the flowline or edge of pavement on one street/road and the flowline or edge of pavement of the intersecting street/road (or edge of driveway) and lines (labeled d1 or d2 on the Sight Distance figure) connecting them at ten (10) feet from their point of intersection. This area will be used to ensure that drivers of vehicles exiting from the stopped approach have the minimum required sight distance available. The minimum required sight distance shall be in accordance with the Minimum Sight Distance Requirements table for two lane streets/roads.

Minimum Sight Distance Requirements

(in feet) for vehicles entering onto two-lane streets/roads:

Operating Speed (mph)	Left Sight Distance d1 *	Right Sight Distance d2 **
20	220	130
25	260	170
30	350	260
35	430	350
40	530	440
45	610	570
50	740	700

** Measured from the driver's eye ten feet back of the flowline or pavement edge to the vehicle approaching in the outside lane.*

*** Measured from the driver's eye ten feet back of the flowline or pavement edge to the vehicle approaching in the median lane.*

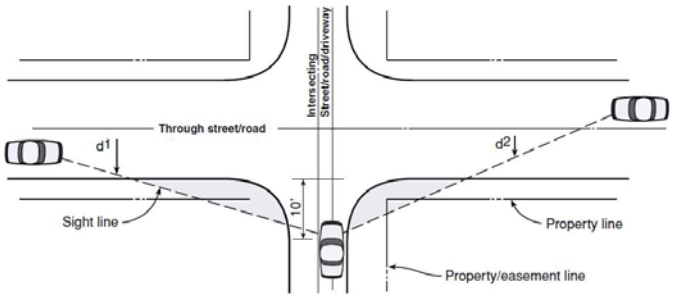

1. Requirements assume that the vehicle is stopped on the proposed public or private street/road or driveway.
2. Requirements are based on a 3.5-foot driver eye height in the stopped vehicle and a 4.25-foot height of the approaching vehicle.
3. The operating speed of the approaching vehicle is assumed to be the posted speed limit.
4. Sight distance requirements as shown in the Minimum Sight Distance Requirements table are designed to enable vehicles entering the street/road to accelerate to the operating speed of approaching vehicles without causing the approaching vehicles to reduce speed by more than 10 mph.
5. Truck traffic (WB30 or larger) entering onto streets/roads requires longer sight distances than shown in Table. Any proposed public or private street/road or driveway regularly used by truck traffic may require an individual analysis.
6. When the criteria for sight distances cannot be met, the County may deny the access, prohibit left turns by vehicles entering the street/road or require speed change lanes.

3.7.3. Right Turn Lanes

3.7.3.1. Right Turn Acceleration Lanes: Right turn acceleration lanes may be required based on an approved transportation study. Right turn acceleration lanes may also be required where necessary for public safety and traffic operations based upon site specific conditions,

as determined by Planning and Zoning.

3.7.3.2. Right Turn Deceleration Lanes: Right turn deceleration lanes are required at arterial and major collector street/road intersections and at driveways on arterial streets/ roads as needed based on required transportation study/analysis. Transportation study/analysis shall address storage, as applicable. Right turn deceleration lanes may also be required where necessary for public safety and traffic operations based upon site specific conditions, as determined by Planning and Zoning.

3.7.3.3. If the proposed street/road intersection or driveway is within two different speed zones, the criteria for the higher speed zone apply.

3.7.3.4. Where there are three or more through lanes in the direction of travel, right turn acceleration and deceleration lanes will be required only when determined necessary by Planning and Zoning due to high traffic volume or other site specific safety considerations.

3.7.3.5. Taper and lane lengths shall be in accordance with the following criteria.

Deceleration Right Turn Lanes

Design Speed (M.P.H.)	Taper Length (For 11' Lane Width)	Lane Length	Total Length* (Taper Length + Lane Length)
25	80'	120'	200'
30	100'	150'	250'
35	120'	190'	310'
40	140'	230'	370'
45	160'	280'	440'
50	180'	320'	500'

**At signalized intersections, where storage is needed for right-turning vehicles, additional length shall be provided to accommodate the average number of vehicles anticipated.*

Acceleration Right turn Lanes

Design Speed (M.P.H.)	Taper Length (For 11' Lane Width)	Lane Length	Total Length (Taper Length + Lane Length)
30	120'	190'	310'
35	120'	270'	390'
40	180'	380'	560'
45	180'	550'	730'
50	240'	760'	1000'

3.7.3.6. A continuous accel/decel lane may be required if the acceleration lane for one access and the deceleration lane for another access overlap or are in close proximity to each other.

3.7.3.7. The minimum pavement width for acceleration and deceleration lanes shall be eleven (11) feet, excluding gutter pan or shoulder.

3.7.3.8. Grade correction factors are required where street/road grades are steeper than three (3) percent.

3.7.4. Left-Turn Lanes: Left-turn lanes are required at all arterial and major collector street/road intersections and at driveways on major collector/arterial streets/roads. Design of left-turn lanes shall be in accordance with the following criteria.

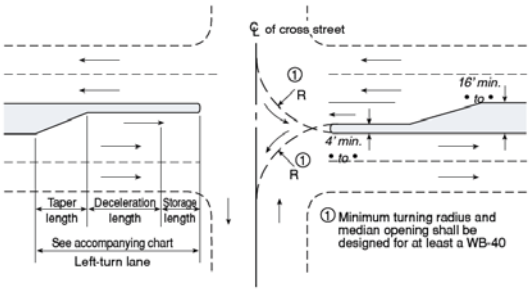

Left-Turn Lanes

Design Speed (M.P.H.)	Taper Length (For 11' Lane Width)	Decel Length	Total Length
30	100'	150'	*250'
40	140'	230'	*370'
45	160'	280'	*440'
50	180'	320'	*500'

**Plus storage length*

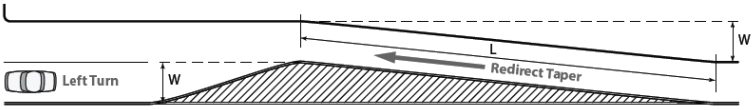

L = Total required redirect taper length
S = Posted or operating speed
W = Transition offset distance

$L = \frac{WS^2}{60}$ Speeds under 45 miles per hour

L = WS Speeds of 45 miles per Hour and over

3.7.4.1. Storage Lengths: Storage lengths for signalized and unsignalized intersections shall be determined by an approved transportation analysis or transportation study, as applicable.

3.7.4.2. Median Design: Other left-turn median designs such as reverse curve taper, offset approach nose and double left-turn lanes must be approved by Planning and Zoning and shall conform to AASHTO standards.

3.7.5. Curb Returns

3.7.5.1. The table below provides the minimum street/road intersection radii measured to flowline or edge of pavement where no curb and gutter is required.

Curb Return Radii (R) To Flowline

Intersecting Street	Principal Arterial	Minor Arterial	Major Collector	Collector	Local
Principal Arterial	Special Design*	Special Design*	40'	40'	30'
Minor Arterial	Special Design*	Special Design*	30'	30'	25'
Major Collector	40'	30'	30'	30'	25'
Collector	40'	30'	30'	25'	20'
Local	30'	25'	25'	20'	20'/15'

**Special Design should provide consideration for right turn channelization.*

3.7.5.1.1. At driveway locations where curb returns are used, the minimum radii allowed on arterials and major collectors shall be twenty-five (25) feet.

3.7.5.1.2. At driveway or private access locations where there is no curb and gutter, the minimum radii (measured to edge of pavement) allowed on arterials and major collectors shall be twenty-five (25).

3.7.5.2. The minimum elevation difference (fall) around curb returns (PCR to PCR) for flow along the curb line shall be as follows:

Radius	Minimum Fall
15'	0.3'
20'	0.4'
25'	0.5'
All Others	1.27% of length from PCR to PCR

3.7.5.3. The maximum fall around curb returns shall be equal to the steepest grade coming into or out of the return multiplied by the return length, + 0.2 feet.

3.7.5.4. Curb Return Profiles: Curb return profiles are required for radii equal to or greater than thirty (30) feet within the public Right-of-Way. A midpoint elevation along the arc length of the curb return shall be shown in plan view for radii equal to or greater than twenty-five (25) feet. Curb return design shall be set in accordance with the following design procedure. General standards for flowline control and profiles within the curb returns shall be as follows:

3.7.5.4.1. The point of tangency at each curb return shall be determined by the projected tangent grade beginning at the point of intersection (P.I.) of the flowlines.

3.7.5.4.2. The arc length and external distance of the curb return shall be computed and indicated on the drawing.

3.7.5.4.3. Show the corresponding flowline (or top of curb) grade for each roadway beyond the P.C.R.

3.7.5.4.4. Design of the curb return flowline shall be such that the maximum cross slope between the midpoint of the curve and the PICR (external distance) does not exceed +5 percent. Grade breaks at the PCR's will not exceed two (2) percent for local and collector streets and one (1) percent for arterials. The flowline design of the curb return will be accomplished within the return without affecting street grades beyond the PCR. Maximum vertical curves will equal the arc length of the curb return. The elevation and location of the high or low point within the return, if applicable, is to be called out in the profile.

3.7.5.4.5. Scale for the curb return profile is 1" = 10' horizontally and 1" = 1' vertically. See Section 2.4.6.

3.7.6. Driveway Spacing

Opposing and adjacent driveway locations shall be in accordance with the following figure and table. The minimum spacing shall be increased as necessary to accommodate left turn storage bays. Offset of opposing driveway locations is not required if driveways are physically constrained to right-in, right-out.

NOTE: Flowline of curb/gutter or edge of asphalt if curb/gutter does not exist or edge of shoulder if asphalt does not exist.

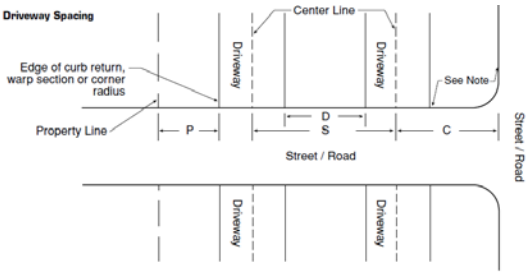

	Figure Reference	Distance
Residential Driveways		
From property lines	P	0'
From streets/roads	C	30'
Between driveways	N/A	0'
On local streets/roads	D	10'
On collector streets/roads	S	80'***
On major collector/arterial streets/roads	S	325'
Non-Residential Driveways on Locals/Collectors		
From property lines	P	0'
From major collectors/arterial streets/roads	C	300' *
From collector streets/roads	C	200' *
From local streets/roads	C	125'
Between driveways		
30 MPH design speed	S	180'
35 MPH design speed	S	200'
Non-Residential Driveways on Major Collectors/Arterials/Parkways		
From property lines	P	0'
From streets/roads	C	500' **
Between driveways		
40 MPH design speed	S	275'

45 MPH design speed	S	325'

** The C dimension may be reduced if approved by Planning & Zoning Division due to the existence of limiting factors. The minimum distance shall be no less than 150 feet.*

*** If the proposed driveway is restricted to right turn movements or if it is not aligned with an existing or planned left turn lane, the C dimension may be reduced if approved by Planning & Zoning Division due to the existence of limiting factors. If signalization is proposed, the minimum C distance shall be increased to 660 feet.*

****May be reduced for circular driveways or driveways with a standard hammerhead turnaround If approved by Planning and Zoning.*

3.7.7. Channelizing Islands The following figures illustrate the minimum design for channelizing islands for site accesses with various turn movement restrictions.

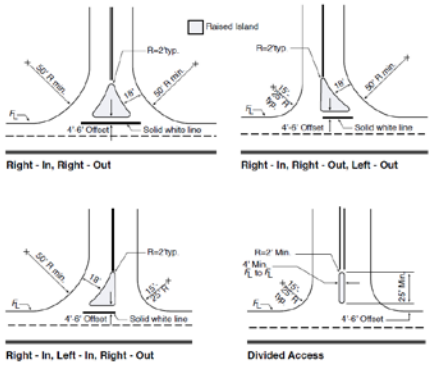

3.7.7.1. Non-rigid post mounted delineators are required on raised islands.

3.7.7.2. Curb ramps four (4) feet wide, with a maximum slope of 12:1, are required and shall be shown on the plans.

3.7.8. Non-Maintained Roads in County Right-of-Way, Driveways, and Private Street/Road~~s, and Non-Maintained Roads in County Right-of-Way~~ Standards.

3.7.8.1. Driveways serving one dwelling unit shall meet the following standards (Template 18):

Exception: If the length of the driveway in the Plains is less than or equal to 50 feet, Sections 3.7.8.1.1. through 3.7.8.1.4. do not apply.

3.7.8.1.1. Curve Radius: Minimum horizontal curve radius of 30 feet at centerline.

3.7.8.1.2. Width: A total width of 14 feet, including a 10-foot all-weather travel surface and two-foot shoulders on either side in accordance with Template 18.

~~or i~~If the length of the driveway in the Mountains exceeds ~~150~~ 500 feet ~~in length~~, and is a total width of 14 feet, including a 10-foot all-weather travel surface and two-foot shoulders on either side, then pullouts shall be required at 200-foot intervals in accordance with Template 19. Due to site constraints, this 200-foot interval could be modified by 50 feet in either direction. Alternatively, if pullouts are not desired, a total width of 16 ft, including a 12-foot all-weather travel surface and two-foot shoulders on either side is ~~required in accordance with Template 18~~allowed.

3.7.8.1.3. Grade: Maximum grade of ten (10) percent on straight sections and twelve (12) percent ~~grade~~ where the dip of the natural terrain bears between South 60° East and South 45° West. Maximum grade of eight (8) percent for curves with radius of less than or equal to 50 feet at centerline.

Exception~~s~~: In the Mountains, a maximum grade of fifteen (15) percent on straight sections for a maximum length of one hundred (100)

Formatted: Indent: Left: 0"

feet is allowed provided the appropriate fire sprinkler systems are installed per the National Fire Protection Association (NFPA) 13D - Standard for the Installation of Sprinkler Systems in One- and Two-Family Dwellings and Manufactured Homes. There may be more than one section up to 15% provided ~~if it is separated~~they are separated by a distance of 1000 feet.

~~3.7.8.1.4. If the length of the driveway in the Plains is less than or equal to 50 feet, Sections 3.7.8.1.1. through 3.7.8.1.34. do not apply.~~

3.7.8.1.~~5~~4. Turnaround: If the length of the driveway exceeds 150 feet, a hammerhead turnaround shall be provided in accordance with Template 20. ~~and the~~~~The location of the turnarounds shall be approved by the appropriate fire protection district.~~

Commented [NS2]: I don't think we want this included any longer.

3.7.8.2. Private streets/roads serving more than one dwelling unit and non-maintained streets/roads~~s~~ in county Right of Way shall meet the following standards:

3.7.8.2.1. Curve Radius: Minimum horizontal curve radius of 30 feet at centerline.

3.7.8.2.2. Width (For a street/road serving up to 15 dwelling units): A total width of 20 feet, including a 16-foot all-weather travel surface and two-foot shoulders on either side in accordance with Template 18~~ for roads serving up to 15 dwelling units~~. Alternatively, ~~for a private road~~ a total width of 14 feet, including a 10-foot travel~~ed~~ surface, two-foot shoulders on either side, and pullouts at ~~150~~ 200 foot intervals in accordance with Template 19. Due to site constraints, this 200 foot interval could be modified by 50 feet in either direction.

3.7.8.2.2.1~~3~~. Width (For a street/road serving 16 or more dwelling units or one or more non-residential units): A total width of 24 feet, including an 18-foot paved surface and three-foot shoulders on either side in accordance with Template 18. ~~for roads serving 16 or more dwelling units or one or more non-residential units.~~

3.7.8.2.3~~4~~. Grade: Maximum grade of ten percent on straight sections~~:~~. Maximum 12 percent grade where the dip of the natural terrain bears between South 60° East and South 45° West. Maximum grade of eight percent for curves with radius of less than or equal to 50 feet at centerline.

Exception~~s~~: In the Mountains,~~3.7.8.2.5~~ a m~~M~~aximum grade of fifteen (15) percent on straight sections for a maximum length of one hundred (100) feet is allowed provided the appropriate fire sprinkler systems are installed per NFPA 13D, for all new dwellings the street/road serves. There may be more than one section up to 15% provided it is separated by a distance of 1000 feet.

3.7.8.3. ~~The appropriate fire protection district may approve alternative standards for driveways and private roads. Plans shall be submitted that bear the written approval of the appropriate fire protection district.~~The off-site driveway or private road shall meet the requirements as described in this section. If the off-site driveway or private road ~~does not~~cannot meet the requirements of this section, the following shall be submitted to Planning and Zoning:

1) A letter with a written description of the existing conditions and documentation of why the off-site driveway or private road cannot meet the requirements,

2) Plans showing the existing conditions of the off-site driveway or private road and/or proposed design,

3) A certified statement by a qualified Colorado-registered professional engineer indicating that the off-site driveway or private road will be able to serve the residents effectively and safely. This statement shall include a detailed explanation of how an emergency apparatus within the appropriate Fire Protection District will be able to serve a residence safely and effectively.~~ and will be safe for fire apparatus.~~ Such statement shall bear the professional engineer's seal, signature and date, and

Commented [NS3]: Should this inlcude evidence that apparatus can make it up the road. Either with autoturn or turning radius templates.

4) A written statement from the property owner that a fire sprinkler system will be installed per NFPA 13D at the time of Building Permit.

These submittal documents will be required to be reviewed and approved by Planning and Zoning prior to issuance of a building permit. Planning and Zoning may consult directly with the appropriate Fire District when evaluating offsite driveways or private roads which cannot meet the requirements of this section.~~–~~

3.7.8.4. Driveway approaches and private road intersections with public roads must comply with Standard 8 - Driveway and Private Transportation Design and Construction Manual – Amended ~~12-17-19~~XX-XX-XX

Road Approaches onto Roads.

3.7.8.5. Cattle guards shall conform to the current edition of the CDOT M&S Standard Plans and approved by the appropriate fire protection district.

3.7.8.6. All gates and entry-way structures shall be approved by the appropriate fire protection district.

3.7.8.7. All streets in the Plains are required to be paved.

3.8. Drainage

All storm drainage systems shall be designed in accordance with Jefferson County Storm Drainage Design and Technical Criteria (JCSDDTC). Safe and efficient conveyance of traffic is the primary function of streets/roads; therefore, design of the storm drainage function shall not exceed the limits (such as gutter capacity and street overtopping) set forth in the JCSDDTC. All new or repaired storm sewer pipe and associated structures within County Right-of-Way and/or easements shall be constructed with trace wire and test locations. Installation shall be tested for operation and documented with Form Letter "T", in accordance with Jefferson County Land Development Regulation Section 33.

3.8.1. Crosspans: Crosspans are not permitted across collector or arterial streets, nor are they allowed on streets with existing storm sewer systems. Crosspans may be used parallel to collector or arterial streets to convey storm runoff across local streets.

3.8.2. Inlets: Inlets shall be located to intercept gutter flow at the point gutter capacity is exceeded by the storm runoff (see Chapter 9 of the JCSDDTC for gutter capacity). Inlets shall also be installed to intercept cross-pavement flows at points of transition in superelevation. Due to the presence of curb ramps at intersections, inlets are not allowed within the curb return, but shall be located at the tangent points of the curb return.

3.8.3. Cross Slope: Except at intersections, or where superelevation is required, streets/roads shall be level from top of curb to top of curb (or flowline to flowline) and shall have a two (2) percent crown. At or within 150' of an intersection, the maximum elevation difference between flowlines is that dictated by the intersection grade (Section 3.5.2.) and the actual distance between flowlines.

3.8.3.1. Parabolic or curved crowns are not allowed. In no case shall the pavement cross slope at warped intersections exceed the grade of the through street.

3.8.3.2. Carrying the crown at a side street into the through street is permitted only when drainage considerations warrant such a design.

3.8.3.3. The rate of change in pavement cross slope, when warping side streets at intersections, shall not exceed one (1) percent every twenty-five (25) feet horizontally on local streets/roads, one (1) percent every thirty-seven and one-half (37.5) feet horizontally on collector streets/roads, or one (1) percent every fifty-six and one-half (56.5) feet horizontally on arterial streets/roads.

3.8.4. Temporary Erosion Control: Temporary erosion control is required along and at the ends of all roadways that are not completed due to project phasing, subdivision boundaries, etc., in accordance with the Jefferson County Zoning Resolution, Section 15.

3.8.5. Cross Culverts: Cross culverts shall be installed at locations where roads cross natural drainageways and/or where changes in road grade are greater than two (2) percent. The culvert slope shall match as nearly as possible that of the existing topography, but shall in no case be less than one (1.0) percent. Cross culverts for roads shall be spaced a maximum of five hundred (500) feet apart.

3.9. Traffic Control

3.9.1. Construction Traffic Control: Traffic safety in construction zones should be an integral element of every project from planning through design and construction. Pedestrian, as well as vehicular traffic, should be considered in the design of a traffic control plan. A traffic control plan shall be submitted to and approved by Transportation and Engineering prior to issuance of a construction permit.

Design of all traffic control plans shall be in accordance with Part VI of the Manual on Uniform Traffic Control Devices, Standards for Work Zone Traffic Control. All necessary signs, pavement markings, barricades, etc. shall be shown on the plan.

3.9.2. Traffic Signals: Traffic signals shall be installed at street/road intersections or site accesses identified as meeting warrants in the traffic study submitted for a proposed development. If the proposed signal location is within twelve hundred (1,200) feet of any adjacent signal, a two-way progression analysis shall be included in the traffic study.

Design of all traffic signals shall be in accordance with the Manual on Uniform Traffic Control Devices and the Colorado Department of Transportation Standards and Specifications. Traffic signal plans shall be submitted to and approved by Planning and Zoning.

Traffic signal poles shall not be installed within sidewalks or curb ramps.

3.9.3. Signing and Striping: Plans are required for signing/ striping of new streets/roads and re-signing/striping of existing streets/roads necessitated by development. All signing/striping plans shall be in accordance with the Manual on Uniform Traffic Control Devices (MUTCD) and shall be submitted as part of the construction plans.

3.9.3.1. The signing plan shall:

1. Show the general longitudinal location of each existing and proposed sign (by side of street/road and station).
2. Specify the sign legend and sign type (from the MUTCD).
3. Specify the sign size.
4. Include a typical detail of installation dimensions (height, distance from curb or edge of pavement).
5. Include a detail of post and base dimensions and installation plan (showing any wedges or sleeves, depth below surface, any materials used).
6. Specify the blank gauge and material of the sign(s).
7. Note the reflectorization provided.

3.9.3.2. The striping plan shall show:

1. Striping material (paint, thermoplastic, preformed tape, etc.).
2. Color designation and line width.
3. Lane width.
4. Proposed and existing lane striping including skip interval.
5. Typical treatments for accel/decel lanes, turning lanes, bike lanes and crosswalks.

3.9.3.1. Stop signs shall be placed at intersections in accordance with the MUTCD, unless otherwise approved by the Director of Planning and Zoning.

3.9.3.2. All street/road name signs shall be in accordance with the current edition of DRCOG "Guidelines for the Design and Placement of Street Signs in the Denver Region".

3.10. Miscellaneous

3.10.1. Guardrail: In locations where guardrail is required, as determined by Planning and Zoning, design shall be in accordance with the Colorado Department of Transportation Standards and Specifications. Determination of guardrail requirements shall be based on Colorado Department of Transportation Roadway Design Manual, Section 702. Guardrail locations shall be shown on the construction plans.

3.10.2. Noise Attenuation: In locations where arterial streets/roads are adjacent to existing or planned residential areas, fencing and/or other noise attenuation measures are required. These measures may include, but are not limited to, earth beams, landscaping, walls, or a combination.

3.10.3. Street Lighting: Street lights shall be provided at all parkway/arterial/major collector street/road intersections. In addition, street lights shall be provided at all locations where multifamily residential, commercial or industrial site driveways intersect

parkway/arterial/major collector streets/roads. Street lights shall be designed in accordance with the most recent ANTI/ICES Roadway Lighting Standards and installed in accordance with Public Service Company of Colorado standards. Light poles shall not be installed within sidewalks or curb ramps.

3.10.4. Roundabouts: Roundabouts may be constructed subject to an approved traffic study. Roundabouts shall be designed in accordance with the current edition of the Federal Highways Administration Publication, Roundabouts: An Informational Guide, and approved by Transportation and Engineering and the appropriate fire protection district.

3.10.5. Bridges: Bridges shall be designed in accordance with CDOT Bridge Manuals and approved by Transportation and Engineering and the appropriate fire protection district.

3.10.6. Curb Extensions (mid-block and corner) and Pedestrian Refuge Islands: Curb extensions and pedestrian refuge islands shall be designed in accordance with the current version of the Federal Highway Administration Bicycle and Pedestrian Report and approved by Transportation and Engineering and the appropriate fire protection district.

Chapter 4

Pavement Design and Technical Criteria

4.1. General

This section sets forth the minimum criteria and design procedures for public and private roadway pavements. Recommended design methodologies for asphalt are addressed and essentially follow the Colorado Department of Transportation (CDOT) and the Asphalt Institute methodology. Some standardization of criteria has been made in design procedures. Other design methodologies may be presented for comparison to the current County design method.

4.2. Pavement Design Report Submittal

4.2.1 Preliminary Pavement Design: A Preliminary Pavement Design shall be used for estimating purposes only to determine the financial security "Exhibit A" associated with development projects. Three standardized Preliminary Pavement Designs corresponding to three zones of unique geotechnical characteristics within Jefferson County are presented in Construction Standard 16-18. Construction Standard 19 shows each of the three zones. Zone 1 corresponds with materials associated with decomposing granite in the higher elevation foothills and mountains. Zone 2 addresses highly expansive clay and claystone material within the Designated Dipping Bedrock Area with edge drains. Zone 3 involves non-cohesive soil and weathered bedrock along the Front Range. The Preliminary Pavement Design shall be replaced with the Final Pavement Design, and the associated "Exhibit A" financial security costs recalculated, after County approval of the Final Pavement Design Report.

4.2.2 Final Pavement Design:

The final pavement design shall be completed and submitted after or in conjunction with County approval of the associated construction plans. All soil samples must be taken after overlot grading,or represent the "as-constructed" soil conditions after construction has been completed. Pavement design approval is required prior to placement of any concrete flatwork and/or paving within County Right-of-Way.

The report shall be prepared by or under the supervision of and signed by a Professional Engineer registered in the State of Colorado and shall include the following information:

A. Vicinity map to locate the investigated area.

B. Scaled drawings showing the location of borings, and required information stated in 4.3.2.

C. Scaled drawings showing the estimated extent of subgrade soil types and Equivalent Daily Load Application (EDLA) for each street.

D. Pavement design alternatives for each street on a scaled drawing.

E. Tabular listing of Sample Designation, Sample Depth, Composite Group Number, Liquid Limit, Plasticity Index, Percent Passing the No. 200 sieve, American Association of State Highway and Transportation Officials (AASHTO) Classification, Group Index, Percent Swell from Swell Consolidation tests, and Soil Description.

F. California Bearing Ratio (CBR) or R-value test results and calculations for each soil type used in the design. Include natural moisture content and natural density.

G. Pavement design nomographs supplied by Jefferson County properly drawn to show Soil Support, EDLA and Structural Number (SN).

H. Design calculations for pavement thickness.

I. Percentage water soluble sulfates, sampled at a minimum of every other boring.

J. A discussion regarding potential subgrade soil problems including, but not limited to:

1. heave or settlement prone soils
2. frost susceptible soils
3. ground water
4. drainage considerations (surface and subsurface)
5. cold weather construction (if appropriate)
6. other factors or properties which could affect the design or performance of the pavement system

K. Recommendations to alleviate or mitigate the impact of problems discussed in Item J above.

4.3. Subgrade Investigation

4.3.1 Field Investigation: The field investigation shall consist of boring soils to a depth of at least five feet below the bottom of the proposed asphalt pavement layer elevation for roads classified as Local or Collector. Borings shall extend 10 feet below the bottom of the proposed asphalt pavement layer elevation on Major Collector / Minor Arterial and Major Arterial roadways. In all cases borings shall be spaced no more than 250 feet apart, or a minimum of one boring for each section of street, unless otherwise required by Transportation and Engineering. The borings shall be checked for ground water at the time of drilling, and then 24-hours after the borings are completed. Samples shall be taken after overlot grading is completed and the subgrade is "rough cut" (1 to 2 feet of proposed elevation). Soil classifications shall be verified after installation of utilities.

Geological features within five feet of the existing ground surface, and all new roadways proposed in the Dipping Bedrock Area, require more detailed investigation including drilling and/or trenching. Every third bore hole shall be a minimum of 10 feet deep, regardless of the road classification.

California Drive samples shall be obtained from each boring within 12-18 inches of the final subgrade elevation.

4.3.2. Boring Profiles: Boring logs shall include the following:

a. Date, Strata Elevations, Depth of Boring.

b. Natural moisture content, Blow Count and Dry Density of each undisturbed sample.

c. Water table elevation.

4.3.3. Classification Testing: Each soil sample shall be tested according to AASHTO and/or the American Society for Testing Materials (ASTM) criteria to determine: Liquid Limit, Plastic Limit, Plasticity Index, and Percentage passing the U.S. Standard No. 200 sieve. Samples of sands and gravels shall require gradation analysis for classification determination.

These data shall be determined using the following methods:

a. Liquid Limit - AASHTO T 89 (ASTM D 4318)
b. Plastic Limit - AASHTO T 90 (ASTM D 4318)
c. Passing No. 200 - AASHTO T 11 (ASTM C 117)
d. Gradation - AASHTO T 27 (ASTM D 422)

The results of these tests shall be used to calculate the AASHTO Classification and Group Index using AASHTO M 145.

4.3.4. Soil Grouping: Soil samples collected in the field investigation can be combined to form soil groups. These groups shall be based upon the AASHTO Classification, Group Index and location within the area investigated. Groupings shall not consist of samples with different AASHTO Classifications (Note: There may be more than one group index within a given classification). Composite samples can be manufactured by combining representative, equal portions of each sample contained within the group and mixing to provide a uniform composite sample of the soil group. This shall be limited to group indices within the range of 7. Composite samples shall be subjected to Classification Testing as outlined in Section 4.3.3. Moisture-Density curves must be included for groups used in the design.

4.3.5. Subbase Support Testing: Individual subbase or composite samples shall be tested to determine the support value using either CBR (California Bearing Ratio) or Hveem Stabilometer (R-value) testing. These values shall be used in the design of pavement sections in accordance with the procedures outlined in Section 4.5. Tests shall be conducted in accordance with the following procedures:

4.3.5.1. CBR Tests: California Bearing Ratio tests shall be conducted in accordance with AASHTO T 193 with the following modifications:

a. Note 4 of AASHTO T 193 shall not apply. A 3- point CBR evaluation is required.
b. The compaction method used for the CBR test shall be determined by the soil classification.
c. Surcharge shall be calculated using a unit weight of 140 pcf for bituminous pavement and 135 pcf for untreated aggregate base course.
d. The design CBR value shall be determined from the CBR - Dry Density Curve and shall be the CBR value at 95 percent compaction.
e. In addition to the values requested in AASHTO T 193, Stress-Penetration curves for each sample, a CBR - Dry Density curve and Proctor Compaction test results shall be reported.

4.3.5.2. R-Value Tests: Hveem Stabilometer tests shall be conducted in accordance with AASHTO T 190. The design R-value shall be at 300 psi exudation pressure. The reported data shall consist of:

a. Dry density and moisture content for each sample.
b. Expansion pressure for each sample.
c. Exudation Pressure - corrected R-value curve showing the 300 psi design R-value.

4.4. Pavement Design Criteria

This section sets forth the parametric input data to be used for the design of pavements of various roadway classifications. If cohesive soil mitigation is required, the soil treatment shall extend from back of sidewalk to back of sidewalk.

4.4.1. Equivalent (18 Kip) Daily Load Applications (EDLA): The pavement design procedure in this chapter is intended to provide for a 20-year service life of pavement, given that normal maintenance is provided to keep roadway surface in an acceptable condition. EDLA and Design Traffic Number (DTN) are considered equivalent units based on 20-year design criteria and an 18 kip axle loading. All data and design nomographs in this chapter use EDLA units for pavement loading repetitions. Calculations shall be included, where applicable.

EDLA criteria for each Jefferson County roadway classification are given in Table 4.1.

Table 4.1 Recommended Equivalent (18 Kip) - Daily Load Applications (EDLA)

Classification	Class Modifier	EDLA Values
Local	Serving <50 D.U.	8
	Serving >50 D.U.	10
Collector	Residential	30
	Other	100
Major Collector/Minor Arterial	All	200
Principal Arterial	All	200

NOTE: Alternative EDLA values may be considered with justification provided by the Transportation Study, proposed land uses, and traffic analysis that defines proportion of truck vehicles, including construction truck traffic.

4.4.2. Design Serviceability: The following criteria shall be used for all Jefferson County roadways to be dedicated for public use:

Table 4.2 Serviceability Index

Roadway Classification	SI
Arterials	2.5
Collectors	2.5
Local	2.0

4.4.3. Minimum Pavement Layers: This paragraph provides the minimum acceptable pavement layers for public roadways in Jefferson County. These pavement layer thicknesses may be used for preliminary planning purposes. Final pavement designs must be based on actual subbase support test results. Table 4.3 lists these minimum thicknesses for each roadway classification.

Table 4.3 Minimum Pavement Sections

Road Classification	EDLA	Composite Section (inches)			Full Depth Asphalt (inches)
		Asphalt	Subbase		
			Base Course	Stabilized	
<50 D.U.	8	4	6	12	5
=>50 D.U.	10	4	6	12	5
Residential	30	4	6	12	5
Other	100	5	6	12	6
Major Collec-tor	200	5	6	12	7
Minor Arterial	200	5	6	12	7
Major Arterial	200	5	6	12	8

Regardless of the pavement layer design, all soils with an R-value less than 10, or PI greater than 15, shall be stabilized to a minimum of 12 inches below the bottom of the asphalt pavement layer, and shall be included in the depth of treatment.

Cohesive soil subbases shall be overexcavated and replaced with moisture conditioned fill. Minimum requirements for overexcavation are listed below in Table 4.3a.

Table 4.3a Minimum Overexcavation Requirement for Cohesive Soils

	Depth of Overburden/Fill Treatment	
Plasticity Index	Locals/Collectors	Major Collectors/Arterials
15-20	1 foot	2 feet
21-30	2 feet	3 feet
31-40	3 feet	4 feet

NOTES:

1. Road segments with isolated soil types may be designed separately for that individual segment.

2. Soil with (PI) over 40 shall be removed and wasted to a depth of five feet for any type of street.

3. In the Designated Dipping Bedrock Area, all bedrock shall be overexcavated to a depth of at least five (5) feet below the bottom of the proposed pavement layer. Where the bedrock is claystone, the top of the weathered claystone shall be considered as the top of bedrock. Should soil other than bedrock be found throughout the five (5) foot zone, it shall be overexcavated as shown in Table 4.3a.

4. The overexcavation areas shall be recompacted to 95% of maximum Standard Proctor Density (ASTM D-698) at 0 to +4% above optimum moisture content,. There shall be a minimum of 12 inches of soil stabilization below the bottom of the asphalt layer that is included in the total depth of overexcavation.

5. Overexcavation of overburden/fill below the stabilization section may be waived by Transportation and Engineering in areas where either previous overexcavation work during overlot grading has been validated or in cases where a thorough geotechnical investigation determines overexcavation is not warranted. Previous overexcavation work must be validated by compaction reports provided by the developer's geotechnical firm and in accordance with the Land Development Regulation (LDR).

4.4.4. Flexible Pavement Strength Coefficients: Table 4.4. contains standard design coefficients for various pavement materials. Non-standard design coefficients may be used only if approved in advance by Transportation and Engineering. In addition, design values must be verified by predesign mix test data and supported by daily construction tests; or, redesign values will be required.

Table 4.4 Strength Coefficients

Pavement Structure Component*	Strength Coefficients	(Limiting Test Criteria)
Conventional Materials		
Hot Mix Asphalt	0.40	1800 Lbs. Marshall Or R 90+)
Exist. Asphalt Pavement	0.30	(9-15 Yr)
	0.24	(>15 Yr)
Aggregate Base Course	0.12	(Cbr 80+ Or R 78+)
Exist. Aggregate Base Course	0.10	(Cbr 50+ Or R 69+)
Granular Subbase Course	0.07	(Cbr 15 Or R 50+)
Treated Materials		
Cement Treated Aggregate Base	0.23	(7 day, 650-1000 psi)
Lime Stabilized Subbase	0.14	(PI.<6, net swell <.5%, PH >12.3) Compressive Strength >/200 psi, per ASTM 5102-04, Procedure B
All Stabilized Subbase	0.14	Compressive Strength >/200 psi, per ASTM 5102-04, Procedure B

** The combination of one or more of the following courses placed on a subgrade to support the traffic load and distribute it to the roadbed.*

Structural Layers of a conventional flexible pavement design are defined below.

a) Surface Course: One or more layers of a pavement structure designed to accommodate the traffic load, the top layer of which resists

skidding, traffic abrasion, and the disintegrating effects of climate. The top layer is sometimes called "Wearing Course.".

b) Base Course: The layer or layers of specified or selected material of designed thickness placed on a subbase or a subgrade to support a surface course. The use of base course is not accepted in areas that base course does not adequately drain from roadway system.

c) Subbase: The layer or layers of specified or selected material of designed thickness placed on a subgrade to support a base course, surface course or both.

d) Subgrade: Prepared and compacted soil extending to such a depth as to affect the structural design.

4.5. Pavement Design Procedure

4.5.1. Flexible Pavements: The following procedure should be used in determining the Structural Number (SN) of the pavement being designed:

4.5.1.1. Using the appropriate roadway classification, determine the corresponding EDLA (Table 4.1).

4.5.1.2. Determine the Serviceability Index (SI) of the roadway classification (Table 4.2).

4.5.1.3. Select the proper nomograph:

Example: Figure 4.1 Flexible Pavements with SI = 2.0

Example: Figure 4.2 Flexible Pavements with SI = 2.5

NOTE: Original nomographs required are available from Transportation and Engineering.

4.5.1.4. Using subgrade CBR or R-Value test results and EDLA, determine the SN from the appropriate design nomograph.

4.5.1.5. Once the Structural Number (SN) has been determined, the design thicknesses of the pavement structure can be determined by the general equation:

SN = a1D1 + a2D2 + a3D3 + ...

where

a1 = Hot Mix Asphalt (HMA) strength coefficients

a2, a3, an = strength coefficients of additional pavement components

D1 = thickness of Hot Mix Asphalt (HMA) (inches)

D2, D3, Dn = thickness of additional pavement component sections

The strength coefficients for various components of the pavement structure are given in Table 4.4.

The component thickness selected must meet two conditions:

a. Total HMA thickness selected cannot be less than the minimum specified in Table 4.3. for the roadway classification.

b. The base course thickness selected cannot exceed 2.5 times the HMA thickness selected, with a maximum thickness of eight (8) inches.

4.5.1.6. The design must reference any mitigative measures required when the subbase and / or subgrade contains cohesive or expansive soils. Design reports recommending permeable layers such as untreated aggregate base course in the pavement system, must present the measures to be used to ensure adequate drainage of such layers, and to maintain segregation of the layers from the fine-grained soils. If cohesive or expansive soil mitigation is required, the soil stabilization shall extend from back of sidewalk to back of sidewalk. It is required that soils with R-values less than 10 or Plasticity Index greater than 15 be stabilized. Stabilization is for a minimum of the upper twelve (12) inches below the bottom asphalt pavement layer, and shall be included in the depth of treatment.

4.5.2 Rigid Pavements: This procedure has been deleted.

4.6. Material Specifications

The Specifications presented in this section are performance oriented. The County's objective in setting forth these Specifications is to achieve an acceptable quality of roadway structures. All sources for the mined or manufactured materials must be annually approved by Transportation and Engineering as having met the appropriate materials performance specifications. This approval is a condition of using those material sources for public improvement construction. For the purpose of these Standards, public improvements are all roadway improvements, sidewalks, curbs and gutters, appurtenant drainage basins or structures, storm sewer and their access ways, other public works within Jefferson County Right-of-Way, and required stormwater detention structures built on private property and maintained by the property owner(s).

4.6.1. Violations of Approval Conditions

4.6.1.1. Random Testing. Transportation and Engineering may order random tests of materials used in County public improvements to verify compliance with material specifications. These tests are in addition to the requirements of the roadway inspection and testing procedures.

4.6.1.2. Any and all material used to construct public improvements that is not from a certified source, or that is from a certified source and fails one or more random material test, may be subject to complete removal as a condition of County acceptance of that public improvement. Additional tests will be required to confirm the existence and extent of the sub-standard material prior to the initiation of remedial action. The extent of the material to be removed will be at the discretion of Transportation and Engineering.

4.6.2. Use of Materials Not Listed in Section 4.6. Materials in this section and provided with a set of specifications are those deemed to be the primary structural materials commonly or typically used in public improvements. Ancillary public improvement materials such as manufactured paints and coatings, bonding agents, sealers, fabrics or gaskets, insulating materials, etc., should be in compliance with CDOT material specifications for the appropriate material employed. Alternative materials for construction may be proposed for use. Decisions on acceptability of alternative materials will be made by Transportation and Engineering.

4.6.3. Material Specifications

4.6.3.1. Hot Mix Asphalt: This shall comply with material specifications for PG Binders and asphalt mixes in accordance with CDOT's most recent edition of Standard Specifications for Road and Bridge Construction, 702 and 703. This is hereby referred to as "CDOT Standard Specifications".

4.6.3.2. Aggregate Base Course Material. This material shall consist of hard, durable particles or fragments of stone or gravel, crushed to required sizes, containing an appropriate quantity of sand or other finely-divided mineral matter which conforms to the requirements of AASHTO M 147, and to Section 703.03, CDOT Standard Specifications.

Specifications. In addition, the material must have an R-value of 78 or greater, or a CBR of 80+, and must be moisture stabilized. Moisture stability is determined by R-value testing which shows a drop of 12 points or less in R-value between exudation pressures of 300 psi and 100 psi.

Only aggregate from sources approved by the Transportation and Engineering shall be used.

Table 4.5 Aggregate Base Course Materials

Sieve Size	Mass Percent Passing Square Mesh Sieves	
	Class 5	Class 6
2"	100	
1"	95 - 100	100
3/4"	—	95

#4	30 - 70	30 - 65**
#8	—	25 - 55
#200*	03 - 15	03 - 12**
Liquid Limit (LL)	30 Max.	30 Max.

*ASTM (C117)

**For gravel shoulders, No. 200 shall be 9-12 and No. 4 shall be 30-50.

Base course may be used only where the base can daylight in barrow ditches or where the subgrade consists of material classifying as GM, GW, GP, SM, SW, or SP using the Unified Soil Classification System.

4.6.3.3. Cement Treated Aggregate Base Course. This material shall consist of a mixture of aggregate materials, Portland cement and water as outlined in Section 304 of the CDOT Standard Specifications. Acceptable aggregates include CDOT Classes 5 and 6. Other aggregates may be used, if previously approved by Transportation and Engineering.

The materials to be used in construction shall be tested and a mix design submitted to the Transportation and Engineering. As a minimum, the mix design report shall contain a description of material sources, gradations and Atterberg limits of aggregates, cement type, Proctor compaction curves and unconfined compressive strength results for each mix, strength versus cement content curves, a design mix and special construction procedures recommended. Testing shall be in accordance with appropriate AASHTO specifications. Minimum in-place thickness for cement treated aggregate base course shall be twelve (12) inches.

To be approved, the mix shall have a seven-day compressive strength of at least 650 psi and no more than 1,000 psi. The minimum acceptable cement content shall be five percent by weight. Only mix designs approved by Transportation and Engineering shall be used. Approvals are required on a project basis, or an annual basis for suppliers, prior to issuing construction permits.

4.6.3.4. Lime Treated Subgrade: This Material consists of a mixture of native or imported soils, hydrated or quick lime and water as outlined by ASTM Specification C977, CDOT Standard Specification 307.

The materials to be used in construction shall be tested and a mix design submitted to Transportation and Engineering for approval. As a minimum, the mix design report shall contain a description of material sources, gradation and Atterberg limits of native soils, Atterberg limits, pH and five day, 100°F cure unconfined compressive test results for each mix, strength versus lime content curves, a design mix and special construction procedures recommended. Testing shall be in accordance with appropriate AASHTO methods.

To be approved, the mix shall meet the following requirements:

1. Minimum pH of 12.3 after completion of initial mixing.
2. Plasticity Index less than 6, per ASTM D4318.
3. Minimum hydrated lime of 5.0% dry weight, per ASTM D3.
4. Minimum unconfined compressive strength shall be 200 psi, per ASTM D1633.
5. Sulfate concentrations not to exceed .5%

Note: Field validation shall be required after soil blending occurs during construction.

Only mix designs approved by Transportation and Engineering shall be used. Approvals are required on a project basis prior to issuing construction permits. Minimum in-place thickness for this material shall be twelve (12) inches.

4.6.3.5. Lime/Fly-Ash Stabilized: This material consists of a mixture of native or imported soils, hydrated or quick lime, Class "C" Fly-Ash, and water as outlined by ASTM Specification C977, CDOT Section 307.

The materials to be used in construction shall be tested and a mix design submitted to the Transportation and Engineering for approval. As a minimum, the mix design report shall contain a description of material sources, gradation and Atterberg limits of native soils,

Atterberg limits, pH and five-day unconfined compressive test results for each mix, strength versus lime/fly-ash content curves, a design mix and special construction procedures recommended. Testing shall be in accordance with appropriate AASHTO methods.

To be approved, the mix shall meet the following requirements:

1. Plasticity Index less than 6, per ASTM D4318.
2. Minimum unconfined compressive strength shall be 200 psi, per ASTM D1633.
3. Sulfate concentrations not to exceed .5%.

NOTE: Field validation may be required after soil blending occurs during construction.

Only mix designs approved by Transportation and Engineering shall be used. Approvals are required on a project basis prior to issuing construction permits. Minimum in-place thickness for this material shall be twelve (12) inches.

4.6.3.6. Cement Stabilized Subgrade. This material consists of a mixture of native or imported soils, Portland cement and water.

The materials to be used on construction shall be tested and a mix design submitted to Transportation and Engineering for approval. As a minimum, the mix design report shall contain a description of material sources, gradation and Atterberg limits of native soils, Atterberg limits, pH and five-day unconfined compressive test results for each mix, strength versus cement content curves, a design mix and special construction procedures recommended. Testing shall be in accordance with appropriate AASHTO methods.

To be approved, the mix shall meet the following requirements:

1. Minimum Portland cement of 3.0% dry weight per ASTM D3.
2. Minimum unconfined compressive strength shall be 200 psi, per ASTM D1633.
3. Sulfate concentrations not to exceed 0.5%.

NOTE: Field validation may be required after soil blending occurs during construction.

Only mix designs approved by Transportation and Engineering shall be used. Approvals are required on a project basis prior to issuing construction permits. Minimum in-place thickness for this material shall be twelve (12) inches.

Chapter 5

Construction Specifications and Standards

5.1 Construction Specifications

The Permittee agrees to adhere to all construction specifications set forth in the latest edition of the Jefferson County Land Development Regulation, the Jefferson County Transportation Design and Construction Manual and the Colorado Department of Transportation (CDOT) Standard Specifications for Road and Bridge Construction manuals.

5.1.1. Permits: All work performed within County Rights-of-Way and/or easements shall require the issuance of a street/road construction permit. Permits shall be obtained at the Jefferson County Transportation and Engineering office, located at 100 Jefferson County Parkway, Suite 3500, Golden, Colorado.

5.1.1.1. Any permit issued shall pertain only to construction within the County-owned Right-of-Way and is in no way considered a permit to enter on any private property adjacent to such Right-of-Way nor to alter or disturb any facilities or installations existing within the Right-of-Way which may have been installed, and are owned, by others.

5.1.1.2. Permits, when issued, shall be valid for a period of ninety (90) calendar days, and may be renewed for one (1) additional ninety (90) calendar day period, providing the renewal is obtained (renewal may be obtained by telephone) prior to the permit expiration date.

Failure to obtain a renewal as stated herein will require obtaining a new permit and payment of applicable fees.

5.1.1.3. Any permit determined to be without an adequate bond as required in Section 5.1.2. below, shall be subject to immediate revocation by Transportation and Engineering.

5.1.2. Bonds: A non-cancellable permit bond shall be required for Right-of-Way Use and Construction Permits and License Agreements Section of the County Policies and Procedures for Streets and Roads.

5.1.3. General Specifications:

5.1.3.1. Any work done to a street/road or other County property under a permit shall result in the street/road or other property being returned to a condition equal to or better than original, within the limits of careful, diligent workmanship, good planning, and quality materials, with said work being accomplished in the least possible time and with the least disturbance to the normal functioning of the street/road or other property.

5.1.3.2. All backfill material, compaction, and resurfacing of any excavation made in the County property shall be done in accordance with specifications and standards approved by and on file with Transportation and Engineering.

5.1.4. Road Closures: Normally, only one side of a public street/road may be blocked at any given time. Should operating conditions require complete closure, advance approval of the closing of a public street/road must be obtained from Transportation and Engineering or advance approval of the closing of a private road must be obtained from Planning and Zoning. The permittee shall notify the appropriate fire protection district, the Jefferson County Sheriff's Department, and the Colorado State Patrol concerning exact location of barricades and dates traffic will be impeded. Barricades shall be maintained by the responsible contractor.

5.1.5. Utility Installations:

5.1.5.1. Underground: All utility lines, including Cable TV, shall be installed a minimum of two (2) feet below ground surface, or proposed roadway elevation, whichever is lower. This requirement is applicable throughout the Right-of-Way, including ditch lines and/or borrow pits. Exceptions may be granted by Transportation and Engineering where warranted and upon prior written request and approval.

5.1.5.2. Overhead: A minimum ground clearance of 18 feet 0 inches shall be provided where overhead utility lines cross public roads and streets. The clearance shall be measured at the lowest point where the line crosses the traveled portion of the road and/or street.

5.1.6. Base Course: All aggregate base course shall meet CDOT Class 6 Specifications, or an acceptable base course predicated on specific site conditions as approved by Transportation and Engineering. Native material is unacceptable as base course.

5.1.7. All concrete shall be in conformance with the appropriate class as specified in Section 601 of the CDOT Standard Specifications. A combination cure-sealer shall be used for concrete flatwork. Provide adequate texture by means of a moderately heavy broom finish to surfaces prior to applying the cure-sealer. The product shall be Dayton Superior Cure &Seal LV 25% J20 UV or approved equal. Apply two coats per manufacturer's instructions to all exposed surfaces, with the second coat applied at right angles to the first for complete coverage. The temperature range of application is 35 to 90 degrees F. Concrete shall not be left exposed for more than one hour between the time finishing is completed and commencement of curing treatment.

5.1.7.1. Concrete may be placed by machine methods provided that all finish lines are within 1/8" ± tolerance of the lines shown on the plans. The flowline must be free draining.

5.1.7.2. One-half (1/2) inch expansion joint material shall be installed when abutting any existing concrete or a fixed structure.

5.1.7.3. Median Cover Material and Median Edging Patterned Concrete: Median cover material and median edging patterned concrete shall be colored concrete that is Davis color #5084 "Harvest Gold" or approved equal. The release agent shall be Concrete Coatings Stamp-TEK ™ liquid release or approved equal. The stamp pattern shall be Matcrete "UK Cobblestone" or equivalent. A combination cure-sealer containing silane shall be used for concrete flatwork. The cure-seal product shall be SpecChem Cure Shield EX or approved equal. Control joints are saw cut every 10 feet. Expansion joint material with a zip-strip shall be installed between the patterned concrete and the back of curb. Control joints and expansion joints shall be sealed with Sikaflex-2C or approved equal. Refer to STND-18 and STND-19 for details. Granualr pre-emergent herbicide shall be placed in the areas that are to receive median cover.

Formatted: Indent: Left: 0"

5.1.7.4. Detectable Warnings on Concrete Curb Ramps: Detectable Warnings on concrete curb ramps shall be truncated domes of the dimensions shown on the plans. Domes shall be BRICK RED in color. Domes shall be prefabricated by the manufacturer as a pattern on embeddedable surface plates. Dome plates shall be set into wet concrete and shall not be glue or spray-on varieties. Detectable warning plates shall not be concrete pavers, masonry pavers, or cast-iron plates. Refer to STND-16 for details.

5.1.7.5. Waterproofing Membranes: Waterproofing membrane shall be placed on concrete bridge deck surfaces, and concrete box culverts per the waterproofing membrane detail. Surfaces to receive waterproofing membrane shall be thoroughly cleaned via sand-blasting or high pressure water. The waterproofing membrane shall be a hot pour asphaltic material, with 55 pound (#55) minimum asphaltic based roll material immediately placed on top. Refer to STND-17 for details.

5.1.8.1 Storm Sewer Pipe: Within County Right-of-Way and/or easements, all storm sewer pipe shall be minimum Class II Reinforced Concrete Pipe (RCP) in accordance with ASTM C-76, C-506 or C-507. Actual depth of cover, live load, and field conditions may require structurally stronger pipe.

5.1.8.2 All new or repaired storm sewer pipe and associated structures within County Right-of-Way and/or easements shall be constructed with trace wire and test locations. Installation shall be tested for operation and documented with Form Letter "T" in accordance with Jefferson County Land Development Regulation Section 33.

5.1.9. Culverts: Within County Right-of-Way and/or easements, all culverts shall conform to the Storm Drainage Design and Technical Criteria.

5.1.10. Traffic Control Devices

All traffic control devices shall conform to the MUTCD and be approved by Transportation and Engineering prior to installation. Conformance to the following minimum materials specifications or approved equal is required. Traffic signals shall conform to CDOT standards.

5.1.10.1. Signs, Sign Posts, and Anchors: Sign faces, posts and ~~bases~~ anchors shall conform ~~be in conformance~~ with the following materials specifications. ~~All~~ Nonstandard sign~~s faces~~, posts, and anchors ~~bases must be approved by Transportation and Engineering. Nonstandard signs~~ will not be maintained by the County. Post anchors for sign intallation after complete construction require approval by Transportation and Engineering.

5.1.10.1.1. Street Name Signs: Sign blanks shall be 6061 or 5052-H38 aluminum alloy 0.100 ~~.080~~ inches thick. Polyethylene plates (Polyplate) is not allowed. ~~(no polyplate allowed).~~ Facing shall be green, electrocut High~~Hi~~-Intensity reflective sheeting with white ~~Hi~~High-Intensity Prismatic grade retroreflective ~~sheeting~~ letters and numerals. Refer to STND-12 for details.

5.1.10.1.2. Regulatory and Warning Signs: Sign blanks shall be 6061 or 5052-H38 aluminum alloy ~~.10~~ 0.100 inches thick. High-Intensity prismatic grade retroreflective sheeting shall be used for the background color, and letters and numerals for ~~on~~ all regulatory ~~(i.e. stop, speed limit)~~ and warning signs. Refer to STND-12 for details.

5.1.10.1.3. Sign Posts: ~~All sign posts shall be two (2) inch by two (2) inch galvanized telespar tube with .120 inch wall thickness, and three eighths (3/8) inch holes drilled on one (1) inch centers, all sides over full length, ten (10) feet in length. U-posts are not allowed.~~ All sign posts shall be two (2) inch by two (2) inch galvanized TELESPAR® ~~telespar~~ tube with 12 Gauge (0.105 ~~.120~~ inch wall thickness), and ~~three eighths (3/8)~~ 7/16 inch pre-punched holes ~~drilled~~ on one (1) inch centers, all sides over full length, ten (10) feet in length. U-posts are not allowed.

5.1.10.1.4. Sign Post Bases: ~~All sign post bases shall be twist resistant mounting for telespar type post consisting of a steel angle (1/4" x 2 1/2" x 2 1/2" x 24") with a formed and welded steel plate (1/8" x 10" x 15"), used with a compression fit V-lock wedge of 1/8 inch galvanized steel. The wedge must have a one-half (1/2) inch hole drilled in one side for removal.~~ All sign post anchors shall be anchored securely in the soil or concrete to create a breakaway system. All sign post anchors shall be 2.25 inch x 2.25 inch perforated

square tubing, galvanized steel, TELESPAR ® (or equivalent), a minimum of 3 feet in length. Each tube section shall be 12 Gauge (0.105 inch wall thickness) with 7/16 inch diameter pre-punched holes on 1-inch centers, all sides over full length. The anchor tubing shall be twist resistant and allow mounting of a one-size smaller TELESPAR ® sign post. The anchor shall be driven into the soil no less than 30 inches. The sign post shall be inserted 8 inches inside the anchor tubing and double bolted in place prior to covering. Each bolt shall be a Hex Head with a Washer and matching Hex Nut. Bolts shall be secured at the exposed top of the anchor base and placed at opposite tube sides, 90 degrees apart. Signs to be placed in concrete medians or islands shall have the anchor driven inside of a 6-inch Schedule 40 PVC sleeve, with the sleeve measuring the thickness of the concrete plus 1-inch, and secured to the post in the same fashion as described in 5.1.10.1.3. The PVC sleeve shall be embedded in the surrounding concrete when the concrete is placed. Sign post anchors driven in soil not within conrete medians or islands shall be anchored in the same fashion without the PVC sleeve. Refer to STND-13 for details.

5.1.10.2. Pavement Marking: ~~Specified~~ ~~P~~pavement marking materials shall be used as specified for the service life, type, and ~~at~~ locations as identified below.

5.1.10.2.1. Temporary Application, Construction, or Detours: Waterborne paint (High Build) shall be used for short duration striping of lane lines, channelizing lines, edge (fog) lines, and centerlines. The same waterborne paint may be used for crosswalks and stop (bar) lines as deemed necessary. Stencil markings, such as symbols or arrows, shall not be placed for temporary use unless approved by the engineer.
~~3M Stamark 5730 preformed plastic marking material or an approved equivalent shall be used for crosswalks, stop bars, symbols (i.e. turn arrows) and striping for separation of turn and through lanes.~~

5.1.10.2.2. Permanent Application: Epoxy paint shall be used for striping of lane lines, channelizing lines, edge (fog) lines, and centerlines. Preformed Thermoplastic Pavement Markings shall be used for crosswalk and stop (bar) line markings, railroad (RR) crossings, words, symbols, and arrows. The thickness of all Preformed Thermoplastic Pavement Markings shall be 125 mils. Preformed Plastic Marking Tape (Type I), may be used in lieu of Preformed Thermoplastic Pavement Markings, if approved by Transportation and Engineering prior to installation. Preformed Plastic Marking Tape shall be 3M™ Stamark™ 5730 (White), 3M™ Stamark™ A270ES (White), or approved equivalent.~~Preformed plastic marking material or reflectorized paint shall be used for all other pavement marking. Use of thermoplastic pavement marking is not permitted.~~

5.1.10.3. Curb Ramps: All required curb ramps shall conform to current CDOT M&S Standard Plans and be approved by Transportation and Engineering.

5.1.10.4. Bike Racks: All required bike racks shall conform to Association of Pedestrian and Bicycle Professionals "Essentials of Bike Parking: Selecting and Installing Bike Parking that Works".

5.2 Construction Standards

All construction within County Right-of-Way and/or easements shall be in conformance with current CDOT M & S Standards and the following County construction standards.

Standard Number	Description
1	Curb and Gutter
2	Combination Curb, Gutter and Sidewalk
3	6" Vertical Curb, Gutter and Attached Sidewalk
4	6" Vertical Curb, Gutter and Detached Sidewalk
5	Typical Intersection Crosspan

6	Driveway Section for 6" Vertical Curb and Gutter
7	Optional Driveway Section for Combination Curb, Gutter and Sidewalk
8	Driveway Approaches for Roads
9	Typical Median Designs
10	Concrete Joint Details
11	Asphalt Street/Road Patchback
12	Road and Street Name Signs
13	Sign Posts and Bases
14	Typical Arterial Street Lighting
15	Street Name Sign and Bracket on Traffic Signal Pole
16	Detectable Warnings on Concrete Curb Ramps
17	Waterproofing Membranes
18	Median Cover Material Patterned Concrete
19	Median Edging Patterned Concrete
20 ~~16~~	Zone 1 Foothills / Mountain Area Preliminary Pavement Design
21 ~~17~~	Zone 2 Dipping Bedrock Area Preliminary Pavement Design
22 ~~18~~	Zone 3 Front Range Area Preliminary Pavement Design
23 ~~19~~	Design Zone Preliminary Pavement Sections

Definitions

AASHTO

American Association of State Highway and Transportation Officials, A Policy on Geometric Design of Highways and Streets, current edition.

ADT

Average Daily Traffic

Axle Load

The total load transmitted by all wheels on a single axle extending across the full width of the vehicle. Tandem axles 40 inches or less apart shall be considered as a single axle.

California Bearing Ratio

A measure of the ability of a soil or aggregate to resist the transmission of a vertical load in a lateral direction.

CDOT

Transportation Design and Construction Manual – Amended ~~12-17-19~~XX-XX-XX

Emulsified Asphalt Treated Base

A base consisting of a mixture of mineral aggregate and emulsified asphalt spread on a prepared surface to support a surface course.

Equivalent Single Axle Loads (ESAL)

A numerical factor that expresses the relationship of a given axle load to another axle load in terms of their effect on a serviceability of a pavement structure. All axle loads are equated in terms of the equivalent number of repetitions of an 18,000 pound single axle.

18k EDLA

18,000 pound single axle Equivalent Daily Load Applications (explained in "Axle Load" and "ESAL" above).

Flexible Pavement

A pavement structure which maintains contact with and distributes loads to the subgrade and depends upon aggregate interlock, particle friction, and cohesion for stability.

Flowline

The transition point between the gutter and the face of the curb. For a cross or valley pan, it is the center of the pan. Where no curb exists, the flowline will be considered the edge of the outside traveled lane.

Grade

Rate or percent of change in slope, either ascending or descending from or along the highway. It is measured along the centerline of the highway or access.

Lime Treated Subgrade

Subgrade consisting of a mixture of soil, hydrated lime and water, usually mixed in place and placed to support a pavement structure.

MUTCD

The Manual on Uniform Traffic Control Devices and the Colorado Supplement, current editions.

Mountains

See "Mountains" definition in the Zoning Resolution.

Passing Sight Distance

The visibility distance required to allow drivers to execute safe passing maneuvers in the opposing traffic lane of a two-lane, two-way highway.

Pavement Structure

The combination of subbase, base course and surface course placed on a subgrade to support the traffic load and distribute it to the roadbed.

a. Subbase: The layer or layers of specified or selected material of designed thickness placed on a subgrade to support a base course.

b. Base Course: The layer or layers of specified or selected material of designed thickness placed on a subbase or subgrade to support a surface course.

c. Surface Course: The uppermost component of a pavement structure designed to accommodate the traffic load, the top layer of which resists skidding, traffic abrasion, and the disintegrating effects of climate. The top layer is sometimes called "Wearing Course".

Plains

See "Plains" definition in the Zoning Resolution.

Plant Mixed Bituminous Base

A base consisting of mineral aggregate and bituminous material, mixed in a central plant, laid and compacted while hot, on a subbase or a subgrade, to support a surface course.

Plant Mixed Bituminous Pavement
A combination of mineral aggregate and bituminous material mixed in a central plant, laid and compacted while hot.

Regional Factor
A numerical factor expressed as a summation of the values assigned for precipitation, elevation, and drainage. This factor is used to adjust the structural number.

Roads
Public or private Rights-of-Way within the Mountain Area or as otherwise designated within this MANUAL.

Serviceability Index
A number indicative of the ability of the pavement to serve traffic at any particular time in its design life.

Signal Progression
Progressive movement of traffic at a planned rate of speed through adjacent signalized locations within a traffic control system without stopping.

Soil Support Value
A number which expresses the relative ability of a soil or aggregate mixture to support traffic loads through the pavement structure.

Speed Change Lane
A separate lane for the purpose of enabling a vehicle entering or leaving a roadway to increase (acceleration lane) or decrease (deceleration lane) its speed to a rate at which it can more safely merge or diverge with through traffic.

Stabilometer "R" Value
A numerical value expressing the ability of a soil or aggregate to resist the transmission of vertical load in a lateral or horizontal direction.

Stopping Sight Distance
The minimum sight distance necessary to enable a vehicle traveling at or near the design speed to stop before reaching a stationary object in its path.

Storage Lane
Additional lane footage added to a deceleration lane to store the maximum number of vehicles likely to accumulate during critical periods without interfering with the through lanes.

Streets
Public or private Rights-of-Way within the Plains Area or as otherwise designated within this MANUAL.

Strength Coefficient
A factor used for expressing the relative strength of each layer in a pavement structure.

Structural Number
A number derived from an analysis of roadbed and traffic conditions. A Weighted Structural Number is a Structural Number which has been adjusted for environmental conditions. A Weighted Structural Number may be converted to pavement structure thickness through the use of suitable factors related to the type of material being used in the pavement structure.

Traffic Analysis Period
A common analysis period (usually 20 years) used in geometric design.

Untreated Base Course

A layer or layers of base course without treatment of any kind.

Transportation Studies

Table of Contents

1. Requirements for Transportation Studies

2. Trip Generation Memoranda

3. Transportation Analyses

4. Transportation Impact Studies

~~2. Responsibility for Transportation Studies~~

~~3. Transportation Study Format~~

~~Introduction & Summary~~

~~Proposed Development~~

~~Existing Area Conditions~~

~~Projected Traffic~~

~~Transportation Analysis~~

~~Improvement Analysis~~

~~Findings & Recommendations~~

~~Appendix~~

~~Example Report Outline~~

~~Bibliography~~

1. Requirements for Transportation Studies (TS)

~~*General:* In considering the transportation aspects of land development, it is important to determine early in the process if and when a Transportation Study (TS) will be required. The trip generation from a proposed development is the main quantitative threshold; however, existing transportation issues such as a high crash location, complex intersection geometrics or other specific problems or deficiencies may also necessitate a TS. A TS shall be required in accordance with the Submittal Requirements Section of the Land Development Regulation.~~

The TS categories are as follows:

Trip Generation Memorandum: A Trip Generation Memorandum (TGM) is required when the land uses proposed with a development are expected to generate between 150 and 800 vehicle-trips per day. The TGM should show a computation of trips generated from the proposed use(s). The TGM for a proposed rezoning should also include a computational comparison of the maximum possible number of trips generated from the proposed uses and the maximum possible trips generated from existing and allowed uses. Include a table summarizing trip generation estimates.

Formatted: Font: Bold

Transportation Analysis: A Transportation Analysis (TA) may beis required by Planning and Zoningduring a Rezoning to determine the amount and/or distribution of traffic generated from a proposed development that is expected to generate 800 average daily vehicle-trips or more. The TA should show a computational comparison of the maximum possible trips generated from the proposed use(s) compared to the number of maximum possible trips generated from existing zoning. It should also include a percentage change in the average daily traffic (ADT) and peak hour traffic of adjacent roadways. A transportation analysis is a computation of the traffic that is generated from a proposed development that is expected to generate less than 1000 average daily trips. The analysis should conceptually address any potential onsite and offsite improvements that may be necessary to mitigate traffic impacts from the proposed development, including improvements that may already be required by County regulations. Required improvements may include the addition of turning lanes and bicycle/pedestrian facilities, including any other improvements which may be suggested by the analysis.

Minor Transportation Study: A Minor Transportation Study is required when a proposed development is expected to generate 1000 average daily trips per day or more, and the traffic impacts are localized as determined by Planning and Zoning. The study should address any onsite and offsite improvements that may be necessary to mitigate traffic impacts from the proposed development. Required improvements may include the addition of traffic signals, turning lanes, and bicycle/pedestrian facilities, including any other improvements which may be suggested by the study.

Major Transportation Study: A Major Transportation Study is required when a proposed development is expected to generate 1000 average daily trips or more, and the traffic impacts are regional as determined by Planning and Zoning. The study should address any onsite and offsite improvements that may be necessary to mitigate traffic impacts from the proposed development. Required improvements may include the widening or realigning of existing streets; the addition of new intersections or interchanges; the addition of traffic signals, turning lanes, and bicycle/pedestrian facilities, including any other improvements which may be suggested by the study.

Transportation Impact Study: A Transportation Impact Study (TIS) is required during a Site Development Plan (SDP) or Plat process when a proposed development is expected to generate 800 average daily vehicle-trips or more. While the trip generation from a proposed development is the main quantitative threshold, existing transportation issues such as a high crash location, complex intersection geometrics or other specific problems or deficiencies may also necessitate a TIS. The scope of the TIS should be agreed upon by the County and the applicant during the Preliminary Application process. The study should address any onsite and offsite improvements that may be necessary to mitigate traffic impacts from the proposed development. Required improvements may include the addition of traffic signals, turning lanes, and bicycle/pedestrian facilities, including any other improvements which may be suggested by the study.

Formatted: Font: Bold

Letter of Conformance with an Approved TIS: If a development in the Site Development Plan process is expected to generate more than 800 new vehicle trips, and there is an approved TIS on file from the last 3 years for the overall or regional development, a letter of conformance describing that the uses proposed in the development match those assumed in the overall TIS and a copy of that TIS are required.

Formatted: Font: Bold

2. Trip Generation Memoranda

A. Responsibility

General: The applicant is responsible for providing trip generation computation when proposing a development generating between 150 and 800 vehicle trips.

Review Process: The TGM for a proposed development will undergo an iterative review process in accordance with the Land Development Regulation. The applicant shall provide a letter identifying changes to the TGM with each re-submittal.

Certification: The TGM shall be prepared under the supervision of a qualified and experienced transportation professional who has specific training in traffic and transportation engineering or planning.

B. Format

The TGM data should be presented in tables, graphs, maps, and diagrams in lieu of a narrative, for clarity and ease of review.

Introduction and Summary

The purpose of the TGM should be clearly stated. This section should concisely summarize findings and conclusions.

Proposed Development

Provide a description of the project site including size, location, current land use, intensity, existing zoning, proposed zoning, and access roadways.

Existing Conditions

Current traffic volume counts should be collected to determine existing traffic conditions in the study area. If the most recent traffic counts available are 3 years old or older, new traffic counts shall be collected.

Trip Generation Comparison Table

Provide a trip generation comparison table showing the traffic generated from existing land use(s) compared to the maximum potential trip generation for land uses associated with the proposed development. The latest edition of ITE's Trip Generation Handbook provides guidance on how to select between rates and equations when both are available. The national published data provided by ITE should be used as starting points in estimating the amount of traffic by a specific building type or land use. If no trip generation rates nor equations are available from ITE's Trip Generation Handbook, traffic counts from similar site(s) should be provided as a basis for trip generation estimates. If no site(s) with similar uses are available, an analysis of the proposed use based on the site's capacity may be considered.

Findings

Provide a summary of findings, including the percentage increase in average daily traffic (ADT) on adjacent roadways from existing conditions to proposed.

C. Example Outline

Trip Generation Memo

[Development Title]

Case Number: XX-XXXXXX XX

Applicant Information

[Name]

[Address]

[Phone Number]

[Email]

Report Author

[Name]

[Address]

[Phone Number]

[Email]

Formatted: Font: Bold

Formatted: Font: Bold

Formatted: Font: Bold

Formatted: Font: Bold

Formatted: Font: Bold

Formatted: Font: Bold

Date of Original Report: XX-XX-XXXX

Date of Revision: XX-XX-XXXX

Purpose of Analysis

Formatted: Font: Bold

Introduction

The purpose of this Trip Generation Memo is to evaluate the potential impacts of the proposed development to the surrounding transportation network.

Project Overview

Formatted: Font: Bold

[[Description of the project site including size, location, current land use, intensity, existing zoning, proposed zoning, access roadways, and proposed development phasing. Site plan should not be included in this analysis.]]

Existing Roadway System

Formatted: Font: Bold

[Include a description of the study area roadways and intersections including current traffic counts.]

Projected Transportation Impact

Formatted: Font: Bold

Trip Generation

[Description of publication or methodology used to generate daily and peak hour traffic volumes for the proposed development; trip reduction and internal trip capture rates and pass-by trips not applicable]

Trip Generation Summary Table											
Land Use Type /Zoning (Type)	**Land Use Type**	**ITE Code**	**Unit**	**Size**	**Vehicles per day**	**AM Peak**			**PM Peak**		
						In	Out	Total	In	Out	Total
Existing Land Use											
Total											
Existing Maximum* Zoning											
Total											
Proposed Maximum* Zoning											
Total											
Comparison Table											
Zoning Additional Trips (Proposed Zoning Total minus Existing Zoning Total)											

*Maximum potential trip generation based on the existing and proposed zoning

Findings

Formatted: Font: Bold

[Summarize existing land use/proposed intended land use and existing/proposed zoning trip generation and potential impacts to the transportation network]

Existing Land Use/Proposed Intended Land Use

Existing Zoning/Proposed Zoning

Appendix

[Insert any data used in analysis:]

Trip Generation Calculations

Traffic Counts

2. Responsibility for Transportation Studies

General: The impacts from a proposed development as assessed in the TS are the primary responsibility of the applicant and their engineer.

Review Process: The TS for a proposed development will undergo an iterative review process in accordance with the Land Development Regulation. The applicant shall provide a letter identifying changes to the Transportation Study, if applicable.

Certification: The TS shall be prepared under the supervision of a qualified and experienced transportation professional who has specific training in traffic and transportation engineering and planning. All transportation operations and design work shall be completed under the supervision of an experienced professional in conformance with the State of Colorado requirements. The TS shall be signed and sealed by a registered professional engineer in the State of Colorado.

3. Transportation ~~Study Format~~Analyses

A. Responsibility

General: The applicant is responsible to demonstrate how transportation systems can accommodate the traffic generated by a proposed development or how the system can be improved to accommodate the traffic generated by the development.

Review Process: The TA for a proposed rezone will undergo an iterative review process in accordance with the Zoning Resolution. The applicant shall provide a letter identifying changes to the TA with each re-submittal.

Certification: The TA shall be prepared under the supervision of a qualified and experienced transportation professional who has specific training in traffic and transportation engineering or planning.

B. Format

Throughout the TA, data should be presented in tables, graphs, maps, and diagrams in lieu of a narrative, for clarity and ease of review.

Introduction and Summary

The purpose of the ~~TS~~ TA should be clearly stated. This section should contain an Executive Summary that concisely summarizes the principal findings, ~~conclusions~~conclusions, and recommendations of the ~~TS~~TA.

Proposed Development

Provide a description of the land, parcel size~~, general terrain features~~ and location within the county. Include a vicinity map showing the location of the project site in relation to the surrounding transportation network. The offsite as well as site specific development should be described. This includes a discussion of location, proposed zoning, land use and intensity. A site plan is not necessary within a TA.~~, location, site plan and zoning. As required, primary and secondary access to existing streets should be proposed. Construction phasing should be introduced and addressed in this section.~~

Formatted: Font: Bold

Formatted: Font: Bold

Formatted: H2study

Formatted: Normal

Formatted: Normal

Existing Area Conditions

Limits of the study area should be described in this section. The limits shall be mutually agreed to between the applicant and the County. Roadways that provide access to the site ~~as well as future roadways included in the study area~~ are included in this section. ~~Existing intersections within the study area as well as geometrics and traffic signals should be identified. The existing and proposed uses of the site should be identified in terms of various zoning categories of the County. The land use generating the most trips should be used for the analysis.~~ Current traffic volume counts should be collected to determine existing traffic conditions in the study area. If the most recent traffic counts available are 3 years old or older, new traffic counts shall be collected. These counts ~~may~~ should include ~~those for street~~ average daily traffic ~~and for intersection peak hour turning movements~~within the study area.

Projected Traffic

The main component of the TA~~One of the most critical elements of the TS~~ is estimating the amount of traffic being generated from a proposed development. A trip generation comparison table showing computational comparison of the maximum possible trips generated from the proposed uses and the maximum possible trips generated from existing and allowed uses shall be provided. The latest addition of ITE's *Trip Generation Handbook* provides guidance on how to select between rates and equations when both are available. The national published data provided by ITE should be used as starting points in estimating the amount of traffic by a specific building type or land use. If no trip generation rates nor equations are available from ITE's Trip Generation Manual, traffic counts from similar site(s) should be provided as a basis for trip generation estimates. If no site(s) with similar uses are available, an analysis of the proposed use based on the site's capacity may be considered. Include a table summarizing trip generation estimates. Calculate the percentage increase in average daily traffic with the proposed development over the existing traffic.

~~*Computer Software:* A number of computer software packages are available that are designed to either produce trip generation data or accept trip generation data for further analysis.~~

~~*Trip Distribution:* The direction from which traffic will access the site can vary depending on many factors such as the type of proposed development and the area which it will attract traffic, surrounding land uses and population and conditions of the surrounding street system. Document the methods and assumptions made in this section.~~

~~*Trip Assignment:* The final product of this process is total project generated trips, by direction and turning movement, on each segment of the TIS area roadway network. The assignment should reflect the horizon years and consider future conditions of the roadway. Typically, the County uses a 3 year projected and 20 year projected traffic volume. Additional horizon years may be necessary depending on proposed phasing.~~

~~*Internal Trips:* Trips captured internally by a proposed development may be applicable depending on the use. The internal capture rates used should be based on the current version of the ITE's *Trip Generation Handbook*.~~

~~***Pass-by trips:* Trip generation analysis yields the number of vehicle trips that a site is expected to generate at its driveways. A percentage of their trips are simply diverted from trips already passing by on the adjacent roadway system. Pass by trips diverted from a roadway should be rechecked if they represent more than 15% of the traffic volume on that roadway.~~ **Findings and Recommendations**

Summarize the proposed development, its impacts, and the possible mitigation strategies.

C. Example Outline

Rezoning Transportation Analysis

[Development Title]

Case Number: XX-XXXXXX RZ

Applicant Information

[Name]

[Address]

[Phone Number]

[Email]

Report Author

[Name]

[Address]

[Phone Number]

[Email]

Date of Original Report: XX-XX-XXXX

Date of Revision: XX-XX-XXXX

[Cert Number/Seal and Signature of Certified Transportation Professional (PE, AICP-CTP, ITE-PTP] (If applicable)

Purpose of Analysis

Formatted: Font: Bold

Introduction

The purpose of this Transportation Analysis is to evaluate the potential impacts of the proposed zoning to the surrounding transportation network. If the proposed zoning is approved, the Applicant will be required to submit a Transportation Impact Study to determine specific mitigation measures and must satisfy County Land Development Regulations (LDR) and Transportation Design and Construction Manual Roadway Templates at the time of Site Development Plan (SDP) and/or Preliminary and Final Plat (PF).

Project Overview

Formatted: Font: Bold

[Description of the project site including size, location, current land use, intensity, existing zoning, and proposed zoning. Site plan should not be included in this analysis.]

Study Area

Formatted: Font: Bold

[Description of the study area and impacted roadways and intersections. The study area limits should be described and mutually agreed to between the applicant and the county. The study area should not include roadways proposed interior to the development.]

Existing Roadway System

Formatted: Font: Bold

[Include a description of the study area roadways and intersections including existing traffic counts, lane geometry, posted speed limits, current traffic control at intersections, presence of pedestrian and bicycle infrastructure, availability of on-street parking, and whether a roadway is private or public.]

Projected Transportation Impact

Formatted: Font: Bold

Trip Generation

[Description of publication or methodology used to generate daily and peak hour traffic volumes for the proposed development; trip reduction and internal trip capture rates and pass-by trips not applicable during rezoning]

Trip Generation Summary Table

Trip Generation Summary Table											
Land Use Type /Zoning (Type)	**Land Use Type**	**ITE Code**	**Unit**	**Size**	**Vehicles per day**	**AM Peak**			**PM Peak**		
						In	Out	Total	In	Out	Total
Existing Land Use											
Total											
Existing Maximum* Zoning											
Total											
Proposed Maximum* Zoning											
Total											
Comparison Table											
Zoning Additional Trips (Proposed Zoning Total minus Existing Zoning Total)											

*Maximum potential trip generation based on the existing and proposed zoning

Analysis

[Summarize existing land use/proposed intended land use and existing/proposed zoning trip generation and potential impacts to the transportation network. Provide the percentage increase in average daily traffic (ADT) on adjacent roadways from existing conditions to proposed. Level of Service (LOS) calculations are not required with a TA.]

Existing Land Use/Proposed Intended Land Use

Existing Zoning/Proposed Zoning

Recommendations

[Summarize the anticipated public improvements and strategies and/or recommendations to mitigate potential negative impacts to the transportation network in the study area]

Table 2: Anticipated Public Improvements

Summary of the anticipated public improvements per County Land Development Regulations (LDR) and Transportation Design and Construction Manual Roadway Templates (shoulders, sidewalks, curb and gutter, bicycle infrastructure, etc.) if the zoning is approved and the applicant proceeds to subsequent development processes.

Location	Improvements

Table 3: Potential Mitigation Strategies

Formatted: Font: Bold

Formatted: Font: Bold

Formatted: Font: Bold

Formatted: Font: Bold

Formatted: Font: Bold

Summary of potential strategies and/or recommendations that show an ability to mitigate traffic impacts from the proposed rezoning to the study area.

[List strategies that can address potential impacts of increased trip generation from the proposed zoning. Impacts should be those that are common for the location type and the level of trip generation increase. Recommendations should generally indicate if strategy is feasible at the location indicated.]

Location	Strategy	Recommendation

Appendix

[Insert any data used in analysis]

Trip Generation Calculations

Traffic Counts

4. Transportation Impact Studies

A. Responsibility

General: The applicant and their engineer are responsible for mitigating the impacts from a proposed development as assessed in the TIS.

Review Process: The TIS for a proposed development will undergo an iterative review process in accordance with the Land Development Regulation. The applicant shall provide a letter identifying changes to the Transportation Study with each re-submittal of the TIS.

Certification: The TIS shall be prepared under the supervision of a qualified and experienced transportation professional who has specific training in traffic and transportation engineering and planning. All transportation operations and design work shall be completed under the supervision of an experienced professional in conformance with the State of Colorado requirements. The TIS shall be signed and sealed by a registered Professional Engineer in the State of Colorado.

B. Format

Throughout the TIS, data should be presented in tables, graphs, maps, and diagrams in lieu of a narrative, for clarity and ease of review.

Introduction and Summary

The purpose of the TIS should be clearly stated. This section should contain an Executive Summary that concisely summarizes the principal findings, conclusions, and recommendations of the TIS.

Proposed Development

Provide a description of the land parcel size, general terrain features and location within the county. Include a vicinity map showing the location of the project site in relation to the surrounding transportation network. The offsite as well as site-specific development should be described. This includes a discussion of land use and intensity, location, site plan and zoning. As required, primary and secondary access to existing streets should be proposed. Construction phasing should be introduced and addressed in this section.

Existing Area Conditions

Limits of the study area should be described in this section. The limits shall be mutually agreed to between the applicant and the County,

Formatted: Font: Bold

Formatted: Font: Bold

Formatted: Font: Bold

Formatted: Font: Bold

Formatted: Font: Bold

Formatted: Font: Bold

Formatted: Font: Bold

during the Preliminary Application process. Roadways that provide access to the site as well as future roadways included in the study area are included in this section. Existing intersections within the study area as well as geometrics and traffic signals should be identified. The existing and proposed uses of the site should be identified. Current traffic volume counts should be collected to determine existing traffic conditions in the study area. If the most recent traffic counts available are 3 years old or older, new traffic counts shall be collected. These counts should include average daily traffic and intersection peak hour turning movements within the study area.

Background Traffic

Formatted: Font: Bold

Background traffic growth estimates should be based on the most recent regional Travel Demand Model available. Overly conservative projections of background growth will not be accepted. If a growth model is not available for the study area, a reasonable growth rate considering area development potential shall be agreed upon by the applicant and the County during the Preliminary Application process. Growth rates above 2% per year will not be considered.

Trips generated by other approved developments within the study area, that were not included in the traffic counts collected, may be added to the background growth and referenced in the TIS. However, the combined background growth rate from area development and growth modelling shall not exceed an average of 2% per year.

Projected Traffic

Formatted: Font: Bold

One of the most critical elements of the TIS is estimating the amount of traffic being generated. The latest edition of ITE's Trip Generation Handbook provides guidance on how to select between rates and equations when both are available. The national published data provided by ITE should be used as starting points in estimating the amount of traffic by a specific building type or land use. If no trip generation rates nor equations are available from ITE's Trip Generation Manual, traffic counts from similar site(s) should be provided as a basis for trip generation estimates. If no site(s) with similar uses are available, an analysis of the proposed use based on the site's capacity may be considered. Include a table summarizing trip generation estimates.

Trip Distribution: The direction from which traffic will access the site can vary depending on many factors such as the type of proposed development and the area which it will attract traffic, surrounding land uses and population and conditions of the surrounding street system. Document the methods and assumptions made in this section.

Trip Assignment: The final product of this process is total project generated trips, by direction and turning movement, on each segment of the TIS area roadway network. The assignment should reflect the horizon years and consider future conditions of the roadway. Typically, the County uses a 3-year projected and 20-year projected traffic volume. Additional horizon years may be necessary depending on proposed phasing.

Internal Trips: Trips captured internally by a proposed development may be applicable depending on the use. The

internal capture rates used should be based on the current version of the ITE's Trip Generation Handbook.

Pass-by trips: Trip generation analysis yields the number of vehicle trips that a site is expected to generate at its driveways. A percentage of their trips are simply diverted from trips already passing by on the adjacent roadway system. Pass by trips diverted from a roadway should be rechecked if they represent more than 15% of the traffic volume on that roadway. Pass-by trips shall still be applied to the site's driveways and any local roadways between the site and the roadway from which the trips are diverted. Pass-by trip reductions should not be made to the overall trip generation prior to trip assignment.

Transportation Analysis

Formatted: Font: Bold

Capacity analysis is required for each of the major street and site access locations (signalized and un-signalized) within the ~~TS~~ study area. A clearer understanding of both the transportation related implications of the project and the necessary improvements to ensure acceptable operating conditions should result from this section of the TS. In addition, the following County ~~Plans~~ plans and ~~Program~~ program and ~~Factors~~ factors shall be considered in the transportation analysis: ~~County Plans and Program,~~ Major Thoroughfare Plan, Bicycle ~~and Pedestrian~~ Plan and Traffic Impact Fee Program.

Factors:

- Safety
- Neighborhood Impacts
- School Zone Traffic Control
- Traffic Control Needs
- Transit Needs or Impacts
- Transportation Demand Management
- Circulation Patterns
- On-site Parking Adequacy and Off-site Parking Facilities
- Pedestrian and Bicycle Movements/Continuity of Facilities
- Service and Delivery Vehicle Access
- Emergency and Fire Apparatus Access

Transportation Safety: The initial review of existing conditions within the TIS area ~~should~~ shall include analysis of crash data from the 3 most recent years available. Any intersection experiencing Level of Service of Safety (LOSS) III or IV, or above average crashes on the state-specific Safety Performance Functions, ~~a crash rate of over 1 per million entering vehicles~~ will need additional analysis. The proposed site plan should ensure that the internal circulation system and external access points improve pedestrian and bicyclist~~s~~ safety and minimize vehicle/pedestrian and vehicle/bicyclist~~s~~ conflict points.

Transportation Operations: Impacts on transportation operations shall be measured based on the definitions contained in the current version of the *Highway Capacity Manual (Transportation Research Board)*. For each analysis period studied (typically 3 and 20 year periods) and for each phase of the project a projected total traffic volume must be estimated for each critical intersection and roadway segment being analyzed. The projected total traffic volumes (consisting of the summation of existing traffic, background growth traffic, background development traffic and site traffic) will be used in the next step-capacity analysis of future conditions.

Signalized Intersections: Level of Service (LOS) is based on roadway system characteristics that include:

- traffic volume
- lane geometry
- percentage of trucks
- peak hour factor
- number of lanes
- signal progression
- ratio of green time to cycle time (G/C)
- roadway grades
- parking conditions
- bicycle and pedestrian flows

The LOS categories are established in the *Highway Capacity Manual*. In general, LOS ratings of A to D are acceptable while E & F ratings must be mitigated. There are a number of software programs that can determine highway capacity.

Unsignalized Intersections: LOS for multi-way stop controlled intersections and driveway intersections must be determined by computing or measuring control delay. Where capacity analysis shows a LOS of D or worse, an analysis should be completed to determine if a signal, roundabout, or turn restriction might be needed. Any proposed all-way stop intersection must be justified using MUTCD's guidance on multi-way stop applications. Any newly signalized intersections must be justified using MUTCD Warrant 2 (Four-Hour Vehicular

Volume). Alternatively, Warrant 3 (Peak Hour Volume) may be evaluated only if the unusual cases as defined in the MUTCD apply.

Roundabouts: In cases where LOS analysis indicates that an unsignalized intersection is expected to be LOS D or worse, a roundabout will be assessed before consideration will be given to a proposed signalized or multiway stop intersection. Factors for consideration of a roundabout include:

- availability of right-of-way
- crash history or potential
- traffic volume
- lane geometry
- number of lanes
- roadway grades
- parking conditions
- bicycle and pedestrian flows
- level of service

Each proposed location for a roundabout will be evaluated on a case by case basis. The capacity of a roundabout must be evaluated, and appropriate analytical software programs shall be utilized.

Parking: Utilizing ITE's Parking Generation Manual as a starting point, provide an estimate of how much parking the proposed development will generate. Parking utilization rates from similar sites may aid in this analysis.

Queueing: Provide an analysis of projected 95th percentile queues to determine adequacy of existing and proposed turn lane storage lengths, and whether any through-queues block adjacent intersections.

Improvement Analysis

The improvements required to accommodate existing, background and site generated traffic are summarized in this section. Intersections serving the development should be analyzed first. The analysis should include the following steps:

- Identification of critical movements and corresponding intersection approaches.
- Determine if the intersection needs new types of traffic control such as roundabout, signalization or multi-way stop control. ~~The Transportation Study indicates that an intersection internal, adjacent or within 500 feet of the development will satisfy the MUTCD Peak Hour Warrant or Four-Hour Warrant within 20 years.~~
- Evaluation of each critical movement under potential scenarios of adding lanes, altering signal phasing, signal timing or lane use.
- Evaluation of signal locations, phasing and timing, with particular emphasis on corridor signal progression.
- Evaluation of queue lengths for both turn and through lanes to ensure adequate storage space.
- Identification of potential improvements within the contexts of Right-of-Way availability, intersection spacing, signal progression, County design standards and practical feasibility.

Findings & Recommendations

Summarize the proposed development, its impacts, and the proposed mitigation measures. ~~Throughout the TS, data should be presented in tables, graphs, maps and diagrams in lieu of a narrative, for clarity and ease of review. The examples contained in ITE's current version of Publication No. RP-020C *Transportation Impact Analysis of Site Development* is an excellent source of information.~~

C. Example Transportation Impact Study Outline

Transportation Study

Formatted: Font: Bold

[Development Title]

Case Number: XX-XXXXXX SD/PF

Applicant Information

[Name]

[Address]

[Phone Number]

[Email]

Report Author

[Name]

[Address]

[Phone Number]

[Email]

Date of Original Report: XX-XX-XXXX

Date of Revision: XX-XX-XXXX

[Seal and Signature of Colorado Professional Engineer]

Page Break

Executive Summary

Formatted: Font: Bold

Table of Contents

Formatted: Font: Bold

List of Figures

List of Tables

Purpose of Analysis

Formatted: Font: Bold

Proposed Development

Formatted: Font: Bold

Project Location

[Insert vicinity map showing the location of the project site in relation to the surrounding transportation network]

Project Overview

[Description of the site including size, location, land use, intensity, existing zoning, proposed zoning, access locations and proposed development phasing.]

Existing Area Conditions

[Include diagrams and narrative of traffic counts collected]

Background Traffic

[Include reference to source Travel Demand Model, any nearby developments considered, and diagrams of 3-year and 20-year projections]

Projected Traffic

Trip Generation

[Description of publication or methodology used to generate daily and peak hour traffic volumes for the proposed development including any trip reduction considerations, internal trip capture rates and pass-by trips as applicable]

Trip Generation Summary

[Table including land use, intensity, ITE Code, daily traffic volume, peak hour: in, out and total traffic volumes.]

Trip Distribution

Pass-by Trips (if applicable)

Trip Assignment

3-Year Horizon

20-Year Horizon

Transportation Analysis

Level of Service

[LOS diagrams at all study area intersections]

Safety

[LOSS Analysis]

Intersection Controls

[Roundabout analysis, signal- or all-way-stop-warrant analysis]

Parking

[Include parking generation and availability]

Queueing

[Queueing analysis at study area intersections]

Improvement Analysis

[Describe any improvements needed to mitigate impacts]

Conclusion and Recommendations

Formatted: Font: Bold

Formatted: Font: Bold

Formatted: Font: Bold

Formatted: Font: Bold

Formatted: Font: Bold

Formatted: Font: Bold

[Summarize the proposed development including site location, proposed accesses, and trip generation.]

Appendices

Formatted: Font: Bold

Site Plan

Traffic Counts

Growth Calculations

Nearby Development Trip Estimates*

Trip Generation Sheets

LOS Worksheets (Synchro or equivalent)

Roundabout Analysis*

Signal and/or All-Way Stop Warrants*

LOSS Worksheets

Parking Generation Sheets

Queueing Analysis Worksheets

Signal Progression Analysis*

*as applicable

Right of Way & Permits

1123 West 3rd Avenue
Denver, Colorado 80223
Telephone: **303.571.3306**
Facsimile: 303. 571. 3284
donna.l.george@xcelenergy.com

November 27, 2022

Jefferson County Planning and Zoning
100 Jefferson County Parkway, Suite 3550
Golden, CO 80419

Attn: Lindsey Wire

Re: Regulation Amendment - Transportation Design and Construction Manual
Case # 22-122945AM

Public Service Company of Colorado's (PSCo) Right of Way & Permits Referral Desk has reviewed the regulation amendment documentation for **Transportation Design and Construction Manual**. Please be aware PSCo owns and operates existing natural gas and electric distribution and transmission facilities within and throughout Jefferson County and has no objection to these proposals, contingent upon the following:

1. PSCo's ability to maintain all existing rights and these changes should not hinder our ability for future expansion. This includes all present and any future accommodations for natural gas transmission and electric transmission related facilities.

2. Please note that no structures are allowed within utility easements, and the widening of roadways in no way changes the standard required width of utility easements on private property.

3. Bear in mind that per the National Electric Safety Code, a minimum 10-foot radial clearance must be maintained at all times from all overhead electric facilities including, but not limited to, construction activities and permanent structures.

Donna George
Right of Way and Permits
Public Service Company of Colorado dba Xcel Energy
Office: 303-571-3306 – Email: donna.l.george@xcelenergy.com

2ND REFERRAL COMMENTS

2nd Referral Comments and Response Log		
Source of Comment	**Comment**	**Staff Response**
CORE	No comments.	Acknowledged.
Evergreen Fire	It is specified in the main body of this section that an increase to twelve (12) percent grade is allowed when the terrain is on a southern facing aspect. However, in the exception section that allows an increase to fifteen (15) percent grade with installation of an approved automatic fire sprinkler section it is not specified that the exception applies only on terrain that has a southern facing aspect. Clarification is necessary as to if the exception applies only to southern facing aspects.	This applies to all aspects and clarification will be added.
	As a general question, as modifications to grade and other specifications may be granted based upon terrain that has a southern facing aspect; is there any consideration applied to the roadway being shaded or not?	Currently no. This could be a consideration when not meeting the standard and relief is being requested.
	Template 18a indicates a 2-foot and 3-foot shoulder dimension on the left side but only a 2-foot on the right side. Could this be clarified of corrected if it is an error?	To remove the 3'. 2' shoulders apply to driveways.

Arvada Fire	Thank you for the opportunity to review and provide comments on this document. Overall, I do not have any technical recommendations or requests. I just want to clarify one section, 3.7.8.8. I understand that it is difficult to make a standard that works for everyone, especially fire departments. Although we do not have much development within our areas of unincorporated Jeffco, we do get a fair amount of new single-family dwellings on existing lots. We have run into challenges from time to time and required fire apparatus access based on the fire code and not this manual (an example would be a driveway longer than 50 feet, of which we do not allow driveways to be used for fire access). Does this section (3.7.8.8) provide us to enforce our department's fire apparatus access requirements?	Yes 3.7.8.8 allows the requirements of the applicable Fire Protection District to overrule any less restrctive requirements in the Transportation Manual. However, the County would only require a permit for a new driveway if it was associated with a new start building permit or if it exceeds 1/2 acre of land disturbance.
Building Safety	No comments.	Acknowledged.
Planning Engineering	No additional comments at this time. Pending comments received by internal and external agencies modifications may be required.	Acknowledged.
Open Space	Change flagmen to flaggers on page 8	To make change.
	Ensure the Minimum Sight Distance Requirements Table on page 17 is on 1 page and don’t let the header get cut off on a different page. General comment for all tables.	To verify.
	Number/Label figures and tables	To verify.
	5.1.7.1 and 5.1.7.3 are almost identical. Can one be removed, or can they be combined?	T&E supports combining 5.1.7.1 and 5.1.7.3.
	STND numbers in the document don’t match the drawings.	To verify.
Road and Bridge	Road & Bridge is requesting the expansion or addition of language to Section 5.1.8.1 to include tracer wires to curb drains. Installation details would also have to be included. I believe the T&E group is currently working on the installation details.	T&E has an updated detail that has not previously been included in the TDCM. The detail will be incorporated as part of Together Jeffco regulation update.

RTD	No comments.	Acknowledged.
Transportation and Engineering	No comments.	Acknowledged.
Xcel Energy	PSCo's ability to maintain all existing rights and this amendment should not hinder our ability for future expansion, including all present and any future accommodations for natural gas transmission and electric transmission related facilities, and that our current use/enjoyment of the area would continue to be an accepted use on the property and that it be "grandfathered" into these changes.	Acknowledged.
	Please note that no structures are allowed within utility easements, and the widening of roadways in no way changes the standard required width of utility easements on private property.	Acknowledged.
	Bear in mind that per the National Electric Safety Code, a minimum 10-foot radial clearance must be maintained at all times from all overhead electric facilities including, but not limited to, construction activities and permanent structures.	Acknowledged.
	Note that proper clearances must be maintained including ground cover that should not be modified from original depths. Contact Colorado 811 before excavating. Use caution and hand dig when excavating within 18-inches of each side of the marked facilities. Please be aware that all risk and responsibility for this request are unilaterally that of the Applicant/Requestor.	Acknowledged.
Mainero	I received the following from our HOA (MSI) who thought this might be part of my outreach to CDOT and City of Lakewood for a crosswalk, light and turning lane into our community, Red Rocks Ranch, Morrison Road and Girton (Rooney Road). Please let me know.	This is not associated with this regulation update.

	As I read this document several significant changes in response to our June 2023 comments have been made, yet many have not yet been addressed. As matter of professional engineering protocol the document writer should reply to the commentor indicating the disposition of every comment. To date the county has failed to respond to my comments to the two previous versions of this document.	Acknowledged. The County is working to respond to all comments received.
	As a general matter, the Transportation Design and Construction Manual (TDCM) defines engineering standards; therefore, it is appropriate that the TDCM is under the strict authorship control of the Jefferson County Director of Traffic & Engineering engineer NOT the Director of Planning & Zoning. There is actually very little in the document that provides guidance with respect to planning and/or zoning. Similar documents authored by other cities, counties, and state departments of transportation are the domain of the engineering staff within the agency.	While Planning and Zoning is coordinating the referral of these proposed updates, these changes are a coordinate effort between all of Development and Transportation Districts as well as the Fire Protection Districts. The ultimate decision and approval of these proposed changes is by the Board of County Commissioners.
	Additionally, many of the sections of the document are a jumble of clauses taken from other sources and assembled into this document. As a result, of our previous comments regarding, Templates 18,19,20, 21 and Standard 8 — only Standard 8 remains. The others should have been modified to remove the conflicts. For example, the Hammer Head emergency vehicle turn around has been deleted.	These templates are included. Template 18 has been split into Templates 18a through 18d.

Moreover, the design standards, construction templates, and other guidance presented in the TDCM should also be reviewed and approved then sealed by a professional engineer. This section should contain a description of why these specifications are here and what the county hopes to achieve. Should also include statements of how any submittal will be judged by staff.	A PE Stamp will not be added to the Transportation Design and Construction Manual.
The word “should” is used throughout the document. This is not an appropriate word to use in a regulatory document, as it is legally unenforceable. The correct words to use are Shall or Must.	The word "should" was only found once in the document and has been replaced.
The document should include discussion and presentation of the requirements for a “Clear Zone” where errant vehicles can safely recover without striking a hard impediment. https://highways.dot.gov/safety/rwd/provide-safe-recovery/clearzones/clear-zones This will impact design requirements for roadway construction and reconstruction. This is also included in the CDOT Roadway Design Guide, Chapter 7 section 7.1.1.1.2, 7.2.1.16 and Chapter 13, 13.5.5.1. It also has a significant presence in the AASHTO Roadside Design Guide and the FHWA/AASHTO Highway Safety Manual. This is particularly important for the safety of motorists traveling on Jefferson County rural roads.	For most roadways in the County, especially in rural areas, the FHWA - following the AASHTO Design Guide - recommends a clear zone of 7-10 feet. Jefferson County standards require a minimum of a 3-foot shoulder (4 ft on Collectors), plus an additional 4 feet in which the outside slope can not exceed 4:1, creating a clear zone of a minimum of 7 feet. In areas where this is not possible due to extreme geometric conditions, the County uses other strategies such as Guardrail, rumble strips, and advanced warning signage.

In general, the Traffic Study portion of the document is greatly improved. It still needs work to clarify specific portions. My professional opinion is that it is headed in the right direction.	Acknowledged.
Section 3.7.8 Non-Maintained Roads in County Right-of-Way, Driveways, and Private Street/Roads, and Non-Maintained Roads in County Right-of-Way Standards: Template 18 only addresses the cross section, it does not address the plan view. This template has been removed and should be corrected and returned to the document.	Template 18 has been split into 4 templates for clarity.
Section 3.7.8.1.2 Width: The Committee has determined that 500' is too long a distance; therefore, the width specification should be based and justified by the length of hose that the firefighting apparatus carries.	This modification was reviewed and coordinated with the Fire Protection Districts and is applicable to access in and out of the site rather than access to the structure.
Section 3.7.8.1.3 Grade: Grade limitations are generally positive; however, the TDCM also needs to address the maximum change of grade from one roadway section to another. In many scenarios, going from 12% down to 12% up or 12% up to 12% down in a short distance will be a safety hazard and a problem for large vehicles. Additionally, there should be an explanation for this statement reading, for example: "Maximum 12 percent grade where the dip of the natural terrain bears between South 60° East and South 45° West". Moreover, all other possible orientations should also be specified.	The veritcal curve requirements of chapter 3 apply to public and private streets/roads. For driveways, we will specify a maximum grade change allowable. Discuss to see if commentor has any recommendations. An explanation of dip of the natural terrain will be added to the definitions.

Section 3.7.8.2.1 Curve Radius: What is this 30’ curve radius based upon? There needs to be a reference or justification for this specification: It could be that a 30’ radius is not sufficient in many scenarios. Then how will conformance to this be judged? This revision simply dumps this on to the fire departments, to me this is unacceptable guidance, ask them what the minimum should be and/or use the truck turning templates.	This was coordinated with the Fire Protection Districts and it was determined that the 30' radius was acceptable for the regulations. Since there are different apparatus for each District this will allow stricter requirements to be enforced. In addition, the Fire Districts plan to each prepare a hand out.
Section 3.7.8.2.2 Width (For a street/road serving up to 15 dwelling units): Will parking be allowed on these roadways? What about horizontal and vertical obstructions? This width specification should situationally based?	On street/road parking is not permitted, however templates 18c and 18d do specify that if on street parking is desired the template must be widened as approved by Planning and Zoning and the Fire District. Agreed that horizontal and vertical obstructions are situationally based and depend on the Fire District and their apparatus. This is the reason for 3.7.8.8.

Section 3.7.8.3: The use of the clause, “The off-site driveway or private road shall meet requirements of this section” is ambiguous. This specifically must clearly state, in detail, the requirements that the roadway design and construction is required to meet. As this section is written, it is not clear what would constitute an unacceptable roadway or driveway design! There are no details or drawings to clearly show what the minimum acceptable roadway and driveway consists of. The ones that used to exist conflict and have simply been removed. This section must include a statement similar to the following, "The documentation shall include scale drawings upon which fire protection district approved turning templates are overlaid". Additionally, my reaction to the following statement, "Such statement shall bear the professional engineer's seal, signature and date,…" is that, as a professional engineer, I (Paul R. Olson, P.E., T.E.) would not risk my professional engineer’s licenses to approve plans for an on-site driveway or private roadway in a circumstance where the actual requirements are so illdefined. In addition, the county engineers should review the National Society of Professional Engineers (NSPE) code of ethics, https://www.nspe.org/resources/ethics/code-ethics . In signing such waiver that engineer would be in violation of engineering ethics codes. Moreover, if the driveway can’t safely accommodate a fire protection district apparatus, then there is NO condition where an exception should be granted. This requirement should be deleted. It is not clear how Jefferson County Staff will judge any requested exemption under this clause. In my opinion, this clause will only cause Staff and the public significant, ongoing difficulties that are unnecessary. Again, there are no templates or drawings that detail the minimum requirements for driveways as they intersection with the county roadway! It should be the task of the applicant to prove their proposal meets standards set by the county and the fire departments.	Discussed further with commentor. Staff has created updated templates to more clearly define requirements for private streets/roads and driveways. Staff agrees with the commentor that it is the responsibility of the applicant's engineer to show that the on and offsite access meets County standards.

Templates 18, 19, 20 and 21 and Standard 8 conflict. Standard 8 As shown in the above table this standard conflicts with the templates. Also, Section 3.7.8.1.1 and Section 3.7.8.2.1 which specify a 30' radius at the roadway centerline. It is my opinion that a driveway conforming to this standard will not allow safe and efficient fire truck access, particularly with a 10' edge radius and 10' roadway width. In addition, Standard 8 only addresses right angle intersections. These templates should have been corrected to agree with one another rather than simply removed. This standard should also detail the minimum public roadway dimensions. A narrow public road will also impact fire truck access to a private road. This standard would also allow a tight turn with short radius very close (15') to the intersection which would also restrict fire truck access. This situation shall also be subject to Autoturn or turning template analysis. This standard also references "see templates" but doesn't say which ones, would this be templates 18 to 21?	Staff verified with the Fire Protection districts that the 30 foot radius is accptable.
Section 4.4. What are the reference documents for the design of the pavement? Is this in the CDOT publications? This should also address the current existing pavement structure. Will it hold up to major construction activity, and if so what will be the reduction in the pavement life?	This is not a pavement design, but rather a table showing how EDLA values are established for different roads. Existing pavement structures are rarely evaluated.
Section 5.1.10.1.1. Good job to eliminate plastic sign usage.	Acknowledged.
Section 5.1.10.1.4. Rather than (or equivalent) I would suggest (or ACCEPTED equivalent). Plus you need to clearly state how equivalency will be judged. Will it be judged by physical tests or a simple review of catalog cuts?	Section 5.1.10.1.4 refers to Sign Post Bases. Staff is willing to change to "or approved equal". However, generally "or equivalent" is sufficient because if Material A meets the standard and Material B is equivalent then it would be acceptable.

CoSECC (Olson)	Section 6.1.1. There are number of things that should be included in all four levels of analysis, Limits of the area to be analyzed Identification of the main access routes to the site Identification and analysis of all emergency access routes I would only accept the "Letter of Conformance" if it covers all of the regulations currently in force. I have seen some really poor TIS documents submitted to the county and I would not accept them under this clause. Add a table summarizing the requirements for each of the 4 levels. This would include the count thresholds etc. Add a section to clearly state the requirements for data collection. This would include the following: o Areas covered (project limits) o Timing of the counts, o Count types, o Origin and destination of potential development users, o Count durations, o Days when counts shall not be taken unless approved in writing by the County Traffic Engineer. o Acceptable counting technology and accuracy levels. o I should also include data (trip tables, O&Ds, growth rates at a minimum) from the DRCOG traffic models. o Counts shall be continuous for the period specified, gaps in count data shall cause new counts to be taken.	Staff supports only allowing a Letter of Conformance if regulations currently in force are met. Staff also supports adding additional clarification language on data collection requirements (count duration, days, weather) for each traffic analysis option, but certain requests for what is to be included is too contextual and is covered with applicants at the pre-application phase (project limits, count types, duration (weekends)). Additional data requests, while they may be within industry best practices, are unattainable for applicants and for formal staff review (O&Ds, count technology, etc). Futher, the DRCOG growth model does not always reflect true projections and therefore OTIS is acceptable in various circumstances.

A table summarizing the analysis for each level should also be considered. Traffic counts younger than 3 years may not be stale based upon the surrounding land use changes/developments.	T&E is supportive of adding a table describing what level of analysis is required for each application type. Staff will not consider studies older than three years due to significant changes seen in the region and the infeasible request for staff to determine what land uses have changed in the area over the past three years.
The volume thresholds for both a “Transportation Analysis” and a “Traffic Impact Study” are 800 vpd. The “Transportation Analysis” should be eliminated and the TIS shall be completed as a part of the planning process not during the site development process. There isn’t enough rigor to the proposed analysis in the “Transportation Analysis” to identify the true impact and the infrastructure improvements needed to be included in the site development process. Waiting until the site development process weakens the county ability to control the project. Particularly since the volume threshold is the same for each.	The Transporation Analysis is for rezones only and the Traffic Impact Study is for site development. These studies are similar, but Transporation Analysis deliberatelty includes conceptual mitigation and less intense analysis, since much is unknown at rezone (site access(es), number of units proposed, size of commercial building, etc.). A site will first submit a TA when they rezone and then submit a more rigorous TIS when they go through site development, when proposed uses and intensities are solidified.

The “Trip Generation Summary Tables” should be numbered. They should also include Saturday and Sunday as many land uses peak on the weekend.	Staff agrees Trip Generation Summary Tables be numbered appropriately. T&E requests weekend volumes for land uses that peak on weekends, if not already provided based on ITE trip generation codes.
If the Trip Generation Manual doesn’t include the subject land use, there shall be at least 3 similar sites studied as required in the manual. The specific requirements for this in the Trip Generation Manual should be cited. You should specify the data to be collected. There shall also be a succinct description of each site as well as identification of who collected the data and when. It is currently suggested that the sites’ capacity be used if no similar sites exist. Then who and how will the sites capacity be determined and documented? The number of parking spaces is not a good independent variable.	Staff agrees similar sites studied should be required if the ITE Trip Generation Manual does not have an applicable land use. Based on these experiences, staff will require at least 2 similar sites be studied as 3 can be challenging depending on the context. If similar land uses/contexts do not exist, staff will work with the applicant to determine the best approach to achieve accurate trip generation.

The use of the Level of Service (LOS) is rather crude indicator of traffic operations. The origins of LOS was as a public relations tool not for quantitative analysis. The Volume Capacity Ratio (V/C) is more illustrative of the actual impacts. Consider a facility that operates at a V/C of 0.89 which would map to LOS D yet is just below LOS E. Would that be acceptable? How many hours during the day will the facility operate in the V/C regime? If it is 15 minutes it may be acceptable but 4 hours would clearly not be.	LOS provides a great enough indication of traffic operations in Jefferson County. **For unique circumstances, language will be added stating staff reserves the right to request additional Measures of Effectiveness as identified in CDOT's Traffic Analysis and Forecasting Guidelines.** Applicants may submit an Alternatives Standard Request in situations where a failing LOS is not indicative of adverse traffic operations and provide justfication at a higher level of analysis.
A Traffic Impact Study shall include analysis using the DRCOG models. A simple HCM analysis won't tell the full regional impact of such a large development. For example, large developments with major traffic destinations in the Denver metro area have a significant impact on US 285 traffic in Turkey Creek Canyon and currently is not assessed for traffic impacts.	"Background traffic growth estimates should be based on the most recent regional Travel Demand Model available" is currently stated in the Transportation Impact Studies portion of the Transportation Studies section. DRCOG is generally the most recent regional model available, but the current model misrepresents existing and projected growth on certain corridors and CDOT's OTIS projections are therefore accepted in some circumstances.

Evacuation Study. An Evacuation Study shall be included. The recent fires such as the Marshall and the Paradise Fires clearly indicate that evacuation is a major problem. It shall clearly delineate the tributary areas being evacuated and the capacity of each of the evacuation routes. In the mountains and rural areas of the county it should include large vehicles, vehicles evacuating livestock and other large animals as well as recreational vehicles.	Staff is discussing how an Evacuation Study could be implemented into cases as needed.
Appendices. Appendices to this document should include suggested consultant work scopes for these tasks. Otherwise, there will be no uniformity in the documents submitted to the county. This will require more county staff time to review.	Transportation Studies provides outlines for each study type, ensuring the County receives consistent/uniform formats for review.
Template 5 shows a single curb ramp on each corner. The ramps are oriented such that a sight impaired person would be directed into the center of the intersection. This is not a safe design according to the sight impaired community, particularly at signalized intersections. Federal Highways guidance is for two ramps on each corner oriented to a corresponding ramp across the intersection.	Staff understands this comment intended to state Standard 5. The purpose of this standard is to show the crosspan. It is not intended as a standard design for sidewalk ramps.
Template 8 does not indicate the width of the public road which may not be wide enough to accommodate fire truck access. This was a previous issue that has yet to be resolved.	This has been reviewed with the Fire Protection Districts. Any Fire District may require a wider standard than our regulations. To be discussed further with commentor.

Templates 16-1 and 16-2 are not included in the table in Section 5.2. They should also be relocated with templates 26-*.	Staff understands this comment intended to state Standard 16-1 and 16-2. These are for street lights. Street lights are separatH34:K38e structures from traffic signals and therefore should not be included in the Standard 26 series.
Template 16-2 is clearly a sole source item. To me this is a pretty generic lighting fixture it should not be sole source	These details have been taken directly from Xcel's Outdoor Lighting Manual. Xcel maintains the street lights in Jefferson County; the County follows Xcel's standards.
Template 16-1 shows several different styles of lighting fixtures therefore there is a conflict with Template 16-2.	These details have been taken directly from Xcel's Outdoor Lighting Manual. Xcel maintains the street lights in Jefferson County; the County follows Xcel's standards.
Template 26-6 appears to be a direct copy from vendor supplied materials therefore sole source. If another manufacture supplied a pole with the same dimensions as those shown would it be accepted and what would be that process?	The County's standards are based on a joint standard development with the Cities of Lakewood and Westminster. The County will coordinate with these Cities and determine if future changes need to be made

	Templates 26-1 and 26-9 need to be updated to reference the 2020 Interim Revisions to the LEFD specifications. The changes are significant.	The County's standards are based on a joint standard development with the Cities of Lakewood and Westminster. The County will coordinate with these Cities and determine if future changes need to be made
City of Golden	No Comments	Acknowledged.
David Duncan	3.7.8.1.3 Exception for Mountains - 15% grade, spaced by 1,000' and allowance if fire sprinklers are installed - where did these numbers come from? 1,000' separation seems arbitrary, was this input from the Fire Districts? I object to requiring fire sprinklers, why not just grant the exception without that requirement?	Came from the Fire Protection Districts. Most new structures int he mountains require sprinklers. To discuss with Fire Marshalls. Adding the sprinklers to the home provides additional response time ot the district to get to the structure. This is especially needed for homes where width and grade may not comply with standards.
	3.7.8.1.4 Turnaround - should read "or sufficient space to turn around meeting the same dimensions...." If room is present for the fire truck to turn around nothing further should be required.	This requirement came from the Fire Protection Districts. To discuss witht the Districts to determine what *if any alternative standards they would be comfortable granting such as cul-de-sac template, turnaround location and size, pullouts.
	3.7.8.2.2 Width - Template 18b allows for width smaller than stated total of 20'. I believe a total width of 18' incl shoulders is sufficient, does not need to be 20', and there are numerous places in the mountains with private drives smaller than 20'. Template 18d is min total width 14'?	Staff to discuss these templates with the commentor in a meeting.

	3.7.8.3 Offsite Driveways - BIG OBJECTION, the way this is written for relief of any of the standard dimensions: 1. Submit survey and plan from registered PE - this will cost someone $5-20K to get done. 2. Agree to install sprinklers - est $25K cost This will create the same situation as when the requirement to prove defensible space for ANY building permit was passed - people stopped applying for building permits. I GUARANTEE you the same will happen with this regulation change. Suggestion: give P&Z Chair the option to administratively waive requirements, and in doing so he MAY require survey and/or evaluation from an Engineer. Requiring sprinklers is a terrible idea! Let the insurance companies handle that!	Staff to discuss this plan change with the commentor.
	Construction Stds - if the County does not already have it they should include stds for: -Spill (reverse) curb - see attached CDOT Std -Curb Openings for Drainage - see attached std from CO Springs	**Staff agrees to include a 6" Spill curb with 1' gutter and existing detail will be included.** Coordination with Road & Bridge will be required for approval of the Curb Openings for Drainage standard to ensure staff has the ability to maintain such infrastructure.

Jefferson County Horse Council	Sections 3.7.3.1 and Section 3.7.3.2 regarding right turn acceleration lanes. JCHC would like to recommend that these 'lanes' be required for entrances to and from Equestrian Centers and medium to large boarding stables and equine farms. Comment: Slowing down sufficiently when trailering live animals to enter these types of facilities poses a traffic hazard and slows traffic down. Having a horse trailer rear ended is an ugly accident often resulting the serious injury to animals in the trailer. Also exiting these facilities without an acceleration lane poses a significant problem for a driver pulling a trailer requiring a significantly larger gap in traffic to safely enter the flow of traffic, thus creating a potential safety issue. A good example is entering and exiting the Arvada Indiana Equestrian Center on 75th and Indiana. We are suggesting this for all road classifications with the possible exemption of 'Local.'	As defined in the TDCM, "Right Turn Acceleration Lanes: Right turn acceleration lanes may be required based on an approved transportation study. Right turn acceleration lanes may also be required where necessary for public safety and traffic operations based upon site specific conditions, as determined by Planning and Zoning. " This existing language is broad enough to cover the scenario described. Further, if an accel/decel lane benefits an equestrian center, it would be in the applicants own best interest to propose the installation of an accel/decel lane. The county can approve this without having to require it.
	Section 6.4 Transportation Analysis Section 6.4.2. Format, subparagraph "Projected Traffic" (pg 46) Insert after the 6th sentence: Consideration should be given to site-specific uses that may result in the need for acceleration or deceleration lanes due to vehicle trips frequently involving larger vehicles or vehicles pulling trailers.	A Transportation Analysis is a high-level study that involves a lesser level of analysis with a rezone application. Size of vehicle expected would not be a consideration with rezone-related studies.

Section 6.4 Transportation Analysis Section 6.4.2. Format, subparagraph “Analysis” (pg 48) Insert after the 2nd sentence: Consideration should be given to site-specific safety issues for vehicle/pedestrian, vehicle/bicyclist, and vehicle/equestrian conflict.	A Transportation Analysis is a high-level study that involves a lesser level of analysis with a rezone application. The current Transportation Analysis language does not specify analysis for separate modes of transportation intentionally, as too many variables are unknown until site development.
Section 6.5 Transportation Impact Studies Section 6.5.2. Format, subparagraph “Projected Traffic” (pg. 49) Insert after the 5th sentence: Consideration should be given to site-specific uses that may result in the need for acceleration or deceleration lanes due to vehicle trips frequently involving larger vehicles or vehicles pulling trailers.	Projected traffic is based solely on the site and uses ITE Trip Generation Methodolgy, which does not specify the types of vehicles projected.
Section 6.5 Transportation Impact Studies Section 6.5.2. Format, subparagraph “Transportation Safety” (pg 50) modify the third sentence of the section to (modified areas in italics): “…improve pedestrian and bicyclist safety and minimize vehicle/pedestrian, vehicle/bicyclist, and vehicle/equestrian conflict points.”	Pedestrians and bicyclists are considered active modes of transportation in the transportation industry and more commonly need analysis. **A sentence will be added following "...conflict points" that states other vulnerable roadway users shall be considered in the safety analysis if applicable to the development's context. A definition for vulnerable roadway users will be added, including those walking, wheeling, horseback riding, etc.**

Section 6.5.2 Format>Factors – Add Equestrian to bullet point 9: 'Pedestrian, Equestrian and Bicycle Movements/Continuity of Factors.' Comment: The presence and movement of equines within a certain area of a proposed development should be considered just as it is for pedestrians and bicycles. The traditional 'paths' used by equestrians have vanished over the past 30 years in the more populated areas of Jefferson County such as Lakewood, Arvada, Littleton and Golden disallowing equestrian the ability to safely ride from the location where their animal is kept to a park or trail. This was tragically brought home in the accident that occurred in Arvada requiring Griffin to be euthanized at the sight of the accident and injuring his heartbroken owner. JCHC along with other area horse associations and clubs would be more than willing to participate in helping to define areas in Jefferson County that have an equine presence.	Pedestrians and bicyclists are considered active modes of transportation in the transportation industry and more commonly need analysis. **A bullet point will be added to account for any other roadway user anticipated in the context of the area.**
Section 6.5.2 Format>Signalized Intersection: Level of Service – Add Equestrian to bullet point 10: 'Bicycle, pedestrian and equine flows' Comment: Same as Format>Factors comment above.	Level of service is a traffic engineering metric defined by the Highway Capacity Manual methodology. Equine flows are not defined in this methodology.
Section 6.5.2 Format>Roundabouts – Add Equestrian to bullet point 10: "bicycle, pedestrian and equestrian flows.' Comment: Same as Format>Factors comment above.	Industry standard roundabout analysis procedures were not developed to account for equestrian flows.
General Comment: We recommend adding 'equestrian' to any place in this regulation that has 'bicycle and pedestrian.'	"Other roadway users anticipated in the context of the area" will be added where context applies (e.g. some areas reference "traffic" which is approve by FHWA and CDOT, whereas equestrians are not a form of federal transportation standards.

Section 3. Transportation Analysis Subparagraph “Projected Traffic” (pg 62) Insert after the 5th sentence: Consideration should be given to site-specific uses that may result in the need for acceleration or deceleration lanes due to vehicle trips frequently involving larger vehicles or vehicles pulling trailers.	Projected traffic is based solely on the site developement and requires the use of the ITE Trip Generation Methodolgy, which does not specify the types of vehicles projected.
Section 3. Transportation Analysis Example Outline Subparagraph “Analysis” (pg 65) Insert after last existing sentence of the section: Consideration should be given to site-specific safety issues for vehicle/pedestrian, vehicle/bicyclist, and vehicle/equestrian conflict.	"Other roadway users anticipated in the context of the area" will be added.
Section 4. Transportation Impact Studies SubSection B. Format Subparagraph “Projected Traffic” (pg 66 & 67) Insert after 4th sentence of the section: Consideration should be given to site-specific uses that may result in the need for acceleration or deceleration lanes due to vehicle trips frequently involving larger vehicles or vehicles pulling trailers.	Projected traffic is based solely on the site and uses ITE Trip Generation Methodolgy, which does not specify the types of vehicles projected.
Section 4. Transportation Impact Studies SubSection B. Format Subparagraph “Transportation Safety” (pg 68) modify the third sentence of the section to (modified areas in italics): “…improve pedestrian and bicyclist safety and minimize vehicle/pedestrian, vehicle/bicyclist, and vehicle/equestrian conflict points.”	Pedestrians and bicyclists are considered active modes of transportation in the transportation industry and more commonly need analysis. **A sentence will be added following "...conflict points" that states other vulnerable roadway users shall be considered in the safety analysis if applicable to the development's context. A definition for vulnerable roadway users will be added, including those walking, wheeling, horseback riding, etc.**

Traffic Counts> 4. Transportation Impact Study>Transportation Analysis>Factors – Add Equestrians to bullet point 9: 'Pedestrian, Equine and Bicycle Movement/Continuity of Facilities. Comment: Same as Format>Factors comment above	"Other roadway users anticipated in the context of the area" will be added.
Transportation Analysis>Signalized Intersections – Add equestrians to bullet point 10: bicycles, pedestrian and equine flows.' Also if there is a manual pedestrian 'control button' to stop traffic, an equestrian rider height manual 'control button' should be made available to accommodate mounted equestrians. Comment: Same as Format>Factor comment above. Also, having a 'control button' that is equestrian rider height provides a much safer way for an equestrian to pause traffic. Reaching over to push a button designed for pedestrians especially pedestrians confined to wheelchairs/scooters while controlling a 1000# plus animal can be challenging. Dismounting, leading the equine across the road and mounting on the other side of the road also poses a safety issue as an equestrian is in the most dangerous position when mounting and dismounting. Allowing equestrians to safely and quickly cross a road while mounted is the safest solution for both the rider and the traffic.	Equine flows are not a metric used in traffic signal design and this cannot be accommodated. Installation of a push button at rider height may be requested through the Transportation & Engineering division.
Transportation Analysis>Roundabouts – Add equestrian to bullet point 8: 'bicycle, pedestrian and equine flows.' Comment: Same as Format>Factor comment above.	Industry standard roundabout analysis procedures were not developed to account for equestrian flows.

	Our reviewers had a few additional comments and we're not quite sure where they should be placed as recommendations in this document. They are as follows: Consider defining and adding 'Equestrian Infrastructure' similar to 'Bicycle Infrastructure.' JCHC would be willing to provide input this. Consider developing road design standards for street crossings utilized by equestrians. JCHC could provide design recommendations on this. Equine depth perception is quite different than human depth perception. Horses can perceive the white stripes across a road that are often used to indicate a pedestrian or game crossing as a 'cattle guard' or something dangerous and refuse to walk across the lines possibly shying into traffic. Consider additional signage to alert drives that equestrians may be in the area. We understand signage is expensive and some criteria would need to be established for the placement of this type of signage if such criteria does not already exist. We do see some of these types of signs throughout the county which is appreciated. JCHC would be willing to provide input and recommendations including possible locations.	Because Jefferson County does not restrict any active mode from the sidewalk network, **staff will better define that pedestrian infrastructure is inclusive of those walking, wheeling, horseback riding, etc.** Specific facilities for equestrian use that are not inclusive of other modes will not be considered. Jefferson County abides by the FHWAs MUTCD which determines what signs and on-street markings are allowed to be implemented in public rights-of-way. **In areas where equestrian use is high, staff will coordinate with the equestrian community to implement treatments in line with MUTCD.**
	Consider adding rumble strips around stop signs and along roads that don't have sidewalks or shoulders to alert drivers and help keep pedestrians and equestrian safe. The tragic equine/auto accident mentioned above might have been prevented had rumble strips been present at the stop sign. It is our understanding that the driver was distracted in some way and ran the stop sign thus hitting the horse and rider. Rumble strips might have drawn his attention back to the road and the upcoming stop sign.	Perpendicular rumble strips are not supported by the County as they result in greater long-term maintenance costs and can create icing issues during winter, increasing hazards in public right-of-way. Additionally, they are only recommended by MUTCD to alert motorists of unusual vehicular traffic conditions; distracted driving is not the outcome of unusual traffic conditions.

United Power	No Comments	Acknowledged.
WUI	Establish maximum grades for roads not to exceed 10%; proposed roads steeper than 10% must be evaluated by and approved by a qualified professional engineer, taking into account climate, traffic load, environmental conditions, number of turns that would affect traffic flow, and the ability of fire apparatus to operate. See NFPA 1140, Sec. 11.16 for additional guidance on mitigation standards.	To make this change in the TDCM. It would be beneficial if this relief could be requested prior to applying for the Land Disturbance Permit. Could create a separate online permit.
	Establish a maximum angle of approach and departure of eight degrees for any point on a road or its intersection with another road, fire lane, or driveway. Approaches that exceed eight degrees must be evaluated by a qualified professional engineer to determine if emergency apparatus can accommodate such angles. See NFPA 1140 Sec. 11.16 for additional guidance on mitigation standards.	To clarify that this applies at intersections but not at any point along the driveway. Reference Standard 8 in the text. Update standard 8 to include private road intersections.
	Establish maximum grade for driveways not to exceed 12%; proposed driveways steeper than 12% must be evaluated by and approved by a qualified professional engineer, taking into account climate, traffic load, environmental conditions, number of turns that would affect traffic flow, and the ability of fire apparatus to operate. Driveways that are 15% in grade (if approved) can only serve one dwelling unit. Driveways cannot exceed 15% in grade.	To be incorporated in the TDCM Updates.
	Require pullouts for driveways exceeding 500 feet or a total driveway width of 16 ft, including a 12-foot all-weather travel surface and minimum two-foot shoulders on either side of the driveway.	Already applies
	Require a hammerhead turnaround for any driveway that exceed 150 feet in length.	Already applies

	Revise the maximum number of habitable structures that any road serves in the WUI to include projections of ADUs. (LDR Section 15 states that cul-de-sacs cannot exceed one mile and serve no more than 30 existing plus proposed single family residential units or 100 multi-family units or meet alternative compliance mitigation measures. However, these do not account for ADUs)	To be incorporated into the ULUC updates.
	Require at least 13 ft 6 in of vertical clearance over the full width of the road and driveway. See NFPA 1140, Sec. 11.2 for additional guidance on mitigation standards.	To be incorporated into the ULUC updates.
	Require non-combustible signage and addressing for all roadways, bridges, and residences (including ADUs). See NFPA 1140, Section 11.2.18 for additional guidance on mitigation standards.	To be incorporated into the ULUC updates.
	Require bridges and culverts to meet loading requirements of a minimum of 75,000 lbs. Gross Vehicle Weight (GVW); require maximum capacity to be posted on both approaches (per signage recommendations). See NFPA 1140, Sec. 11.2.10 and 11.3.12 for additional guidance on mitigation standards.	To be incorporated into the ULUC updates.
	Revise any other requirements that currently require decision-making authority from the fire protection districts to a) ensure criteria is objective and clear in the TDCM, b) requires fire protection districts consultation, c) places decision-making authority with the County (with additional reliance on professional engineers, as applicable).	To be incorporated into the ULUC updates.

Lindsey Wire

From: Steven Parker <steven.parker@arvadafireco.gov>
Sent: Tuesday, December 19, 2023 9:41 AM
To: PZ-Regulation-Revisions
Subject: --{EXTERNAL}-- Transportation Design and Construction Manual

This Message Is From an External Sender

This message came from outside your organization.

Report Suspicious

Thank you for the opportunity to review and provide comments on this document. Overall, I do not have any technical recommendations or requests. I just want to clarify one section, 3.7.8.8. I understand that it is difficult to make a standard that works for everyone, especially fire departments. Although we do not have much development within our areas of unincorporated Jeffco, we do get a fair amount of new single-family dwellings on existing lots. We have run into challenges from time to time and required fire apparatus access based on the fire code and not this manual (an example would be a driveway longer than 50 feet, of which we do not allow driveways to be used for fire access). Does this section (3.7.8.8) provide us to enforce our department's fire apparatus access requirements? Thank you.

Steven Parker EFO, FM, MS
Fire Marshal
7903 Allison Way Arvada, CO 80005
Desk:303-403-0477
Mobile:303-263-9778
[arvadafireco.gov]www.ArvadaFireCO.gov [arvadafireco.gov]

[facebook.com] [twitter.com] [instagram.com]

The information contained in this transmission may contain privileged and confidential information, including patient information protected
above. If you are not the intended recipient, you are hereby notified that any review, dissemination, distribution, or duplication of these com
sender by reply email and destroy all copies of the original message.

Lindsey Wire

From: AUTOMAILER@JEFFCO.US
Sent: Tuesday, December 19, 2023 3:34 PM
To: Lindsey Wire
Cc: Troy Jones
Subject: 22 122945 AM - Agency Response

Follow Up Flag: Follow up
Flag Status: Flagged

Case Number: 22 122945 AM
Case Type: Regulation Amendment
Case Name: Transportation and Construction Manual
Review: Building Division
Results: No Comment (no further review)
Review Comments:
Scheduled End Date: 19-DEC-23
Reviewer: Troy Jones
Description: Regulations Amendment to the Transportation and Construction Manual

Lindsey Wire

From: Planning Shared Mailbox <planningshared@cityofgolden.net>
Sent: Friday, December 29, 2023 4:36 PM
To: Lindsey Wire
Subject: --{EXTERNAL}-- RE: Regulation Amendment Case 22-122945AM – Transportation Design and Construction Manual - 2nd Referral

Follow Up Flag: Follow up
Flag Status: Flagged

This Message Is From an External Sender
This message came from outside your organization.
Report Suspicious

Good afternoon,

The City of Golden does not have any comments on the revised manual. Happy new year.

Regards,

Karl Onsager, AICP (he/him)
Current Planning Supervisor
Community Development
City of Golden
p: 303.277.8772

Stay involved at GuidingGolden.com [guidinggolden.com]

From: Lindsey Wire <lwire@co.jefferson.co.us>
Sent: Monday, December 11, 2023 5:15 PM
To: PZ-Regulation-Revisions <PZRegRev@co.jefferson.co.us>
Subject: Regulation Amendment Case 22-122945AM – Transportation Design and Construction Manual - 2nd Referral

Dear Agency/Interested Party,

Jefferson County Planning & Zoning is proposing a Regulation Amendment process pertaining to the Transportation Design and Construction Manual. This regulation update includes updates to Chapters 3 and 5 as well as updates to the Transportation Studies Appendix, Standard Details, and Templates.

2nd Referral Red-marked drafts can be found in both Word and Adobe PDF formats on our Regulation Revision website and in the case folder (22-122945AM) here [jeffcogov.sharepoint.com].

If you have trouble using the link. Please access the files by navigating to the Jefferson County Citizen Portal, select “Advanced” and search by the Case Number (22-122945) and Permit Type (Regulation Amendment). From there, select “Detail” => “View Public Documents” and navigate to 3. Review Process Agency Comments, 2nd Referral, 1 Referral Documents.

We are very interested in any comments or concerns that you or your agency may have with these proposed changes. If you have any questions, please contact Planning and Zoning Regulation Revisions at PZRegRev@jeffco.us.

Comments are due Friday, December 29, 2023.

Sincerely,

Planning and Zoning Staff

Lindsey Wire, P.E.
Planning & Zoning
Engineering Supervisor
303.271.8717
lwire@jeffco.us | **planning.jeffco.us**

TOGETHER JEFFCO 2023
County Plans and Regulations Update

Help us shape the future of Jefferson County! Click this image to visit the Together Jeffco Website or type the URL into your browser: https://togetherjeffco.com. From there, you will find ways to provide comments through maps, an idea wall and questionnaires.

[togetherjeffco.com]

JEFFERSON COUNTY COLORADO

We encourage scheduling an appointment to see staff during our office hours Monday - Thursday. Please schedule appointments [outlook.office365.com] and submit applications online. Go to planning.jeffco.us for more information.

Lindsey Wire

From: Brooks Kaufman <BKaufman@core.coop>
Sent: Sunday, December 17, 2023 11:52 AM
To: Lindsey Wire
Subject: --{EXTERNAL}-- RE: Regulation Amendment Case 22-122945AM – Transportation Design and Construction Manual - 2nd Referral

Follow Up Flag: Follow up
Flag Status: Flagged

This Message Is From an External Sender
This message came from outside your organization.
Report Suspicious

Lindsey

CORE Electric Cooperative has no comments.

Respectfully

Brooks Kaufman
Lands and Rights of Way Manager

800.332.9540 MAIN
720.733.5493 DIRECT
303.912.0765 MOBILE

www.core.coop [core.coop].

ELECTRIC COOPERATIVE

The Energy to Thrive™ [core.coop]

[core.coop][twitter.com][facebook.com][instagram.com][linkedin.com]

From: Lindsey Wire <lwire@co.jefferson.co.us>
Sent: Monday, December 11, 2023 5:16 PM
To: PZ-Regulation-Revisions <PZRegRev@co.jefferson.co.us>
Subject: Regulation Amendment Case 22-122945AM – Transportation Design and Construction Manual - 2nd Referral

[CAUTION:] This email is from an external source. Do not open links or attachments unless you trust the sender and confirm the content's safety.

Dear Agency/Interested Party,

Jefferson County Planning & Zoning is proposing a Regulation Amendment process pertaining to the Transportation Design and Construction Manual. This regulation update includes updates to Chapters 3 and 5 as well as updates to the Transportation Studies Appendix, Standard Details, and Templates.

2nd Referral Red-marked drafts can be found in both Word and Adobe PDF formats on our Regulation Revision website and in the case folder (22-122945AM) here [us01.z.antigena.com].

If you have trouble using the link. Please access the files by navigating to the Jefferson County Citizen Portal, select "Advanced" and search by the Case Number (22-122945) and Permit Type (Regulation Amendment). From there, select "Detail" => "View Public Documents" and navigate to 3. Review Process Agency Comments, 2nd Referral, 1 Referral Documents.

We are very interested in any comments or concerns that you or your agency may have with these proposed changes. If you have any questions, please contact Planning and Zoning Regulation Revisions at PZRegRev@jeffco.us.

Comments are due Friday, December 29, 2023.

Sincerely,

Planning and Zoning Staff

Lindsey Wire, P.E.
Planning & Zoning
Engineering Supervisor
303.271.8717
lwire@jeffco.us | **planning.jeffco.us**

TOGETHER JEFFCO 2023
County Plans and Regulations Update

Help us shape the future of Jefferson County! Click this image to visit the Together Jeffco Website or type the URL into your browser: https://togetherjeffco.com. From there, you will find ways to provide comments through maps, an idea wall and questionnaires.

[togetherjeffco.com]

JEFFERSON COUNTY COLORADO

We encourage scheduling an appointment to see staff during our office hours Monday - Thursday. Please schedule appointments [outlook.office365.com] and submit applications online. Go to planning.jeffco.us for more information.

Jefferson County Planning & Zoning
100 Jefferson County Parkway
Golden CO 80419
VIA EMAIL

December 27, 2023

To: Lindsey Wire, P.E., Planning & Zoning Engineering Supervisor

Cc: Chris O'Keefe, Director of Planning & Zoning.
From: Paul R. Olson, P.E., T.E. for the *Conifer & South Evergreen Community Committee*.
Subject: Review comments regarding the proposed updates to the Transportation Design and Construction Manual "Redline_TDCM_DRAFT_12112023 distributed December 11, 2023

GENERAL COMMENTS

As I read this document several significant changes in response to our June 2023 comments have been made, yet many have not yet been addressed.

As matter of professional engineering protocol the document writer should reply to the commentor indicating the disposition of every comment. To date the county has failed to respond to my comments to the two previous versions of this document.

As a general matter, the Transportation Design and Construction Manual (TDCM) defines engineering standards; therefore, it is appropriate that the TDCM is under the strict authorship control of the Jefferson County Director of Traffic & Engineering engineer NOT the Director of Planning & Zoning. There is actually very little in the document that provides guidance with respect to planning and/or zoning. Similar documents authored by other cities, counties, and state departments of transportation are the domain of the engineering staff within the agency.

Additionally, many of the sections of the document are a jumble of clauses taken from other sources and assembled into this document. As a result, of our previous comments regarding, Templates 18,19,20, 21 and Standard 8 — only Standard 8 remains. The others should have been modified to remove the conflicts. For example, the Hammer Head emergency vehicle turn around has been deleted.

Moreover, the design standards, construction templates, and other guidance presented in the TDCM should also be reviewed and approved then sealed by a professional engineer.

This section should contain a description of why these specifications are here and what the county hopes to achieve. Should also include statements of how any submittal will be judged by staff.

The word "should" is used throughout the document. This is not an appropriate word to use in a regulatory document, as it is legally unenforceable. The correct words to use are Shall or Must.

There are a good number of items that are sole source, is this appropriate or allowed? Particularly if Federal funding is used. Sole source procurements may not provide the best value to the county.

The document should include discussion and presentation of the requirements for a "Clear Zone" where errant vehicles can safely recover without striking a hard impediment. https://highways.dot.gov/safety/rwd/provide-safe-recovery/clear-zones/clear-zones This will impact design requirements for roadway construction and reconstruction. This is also included in the CDOT Roadway Design Guide, Chapter 7 section 7.1.1.1.2, 7.2.1.16 and Chapter 13, 13.5.5.1. It also has a significant presence in the AASHTO Roadside Design Guide and the FHWA/AASHTO Highway Safety Manual. This is particularly important for the safety of motorists traveling on Jefferson County rural roads.

In general, the Traffic Study portion of the document is greatly improved. It still needs work to clarify specific portions. My professional opinion is that it is headed in the right direction.

SPECIFIC COMMENTS

The following are our specific comments with respect to the **TDCM Design and Technical Criteria**:

1. **Section 3.7.8 Non-Maintained Roads in County Right-of-Way, Driveways, and Private Street/Roads, and Non-Maintained Roads in County Right-of-Way Standards:** *Template 18 only addresses the cross section, it does not address the plan view. This template has been removed and should be corrected and returned to the document.*
2. **Section 3.7.8.1.2 Width:** *The Committee has determined that 500' is too long a distance; therefore, the* **width** *specification should be based and justified by the length of hose that the firefighting apparatus carries.*
3. **Section 3.7.8.1.3 Grade:** *Grade limitations are generally positive; however, the TDCM also needs to address the maximum change of grade from one roadway section to another. In many scenarios, going from 12% down to 12% up or 12% up to 12% down in a short distance will be a safety hazard and a problem for large vehicles*

*Additionally, there should be an explanation for this statement reading, for example: "***Maximum 12 percent grade where the dip of the natural terrain bears between South 60° East and South 45° West***". Moreover, all other possible orientations should also be specified.*

4. **<u>Section 3.7.8.2.1 Curve Radius</u>:** *What is this 30' curve radius based upon? There needs to be a reference or justification for this specification: It could be that a 30' radius is not sufficient in many scenarios. Then how will conformance to this be judged? This revision simply dumps this on to the fire departments, to me this is unacceptable guidance, ask them what the minimum should be and/or use the truck turning templates.*

5. **<u>Section 3.7.8.2.2 Width (For a street/road serving up to 15 dwelling units)</u>:** *Will parking be allowed on these roadways? What about horizontal and vertical obstructions? This* **width** *specification should situationally based?*

6. **<u>Section 3.7.8.3</u>:** *The use of the clause, "***The off-site driveway or private road shall meet requirements of this section***" is ambiguous. This specifically must clearly state, in detail, the* **requirements** *that the roadway design and construction is required to meet. As this section is written, it is not clear what would constitute an unacceptable roadway or driveway design! There are no details or drawings to clearly show what the minimum acceptable roadway and driveway consists of. The ones that used to exist conflict and have simply been removed. This section must include a statement similar to the following, "***The documentation shall include scale drawings upon which fire protection district approved turning templates are overlaid***".*

   *Additionally, my reaction to the following statement, "***Such statement shall bear the professional engineer's seal, signature and date,…***" is that, as a professional engineer, I (Paul R. Olson, P.E., T.E.) would not risk my professional engineer's licenses to approve plans for an on-site driveway or private roadway in a circumstance where the actual requirements are so ill-defined.*

   In addition, the county engineers should review the National Society of Professional Engineers (NSPE) code of ethics, https://www.nspe.org/resources/ethics/code-ethics . In signing such waiver that engineer would be in violation of engineering ethics codes.

   Moreover, if the driveway can't safely accommodate a fire protection district apparatus, then there is NO condition where an exception should be granted. This requirement should be deleted. It is not clear how Jefferson County Staff will judge any requested exemption under this clause. In my opinion, this clause will only cause Staff and the public significant, ongoing difficulties that

are unnecessary. Again, there are no templates or drawings that detail the minimum requirements for driveways as they intersection with the county roadway! It should be the task of the applicant to prove their proposal meets standards set by the county and the fire departments.

7. **Templates 18, 19, 20 and 21 and Standard 8 conflict. See table:**

Template	Road surface width, minimum	Right of way/easement width
18	10	20
19	12	16
20	12	24
21	16	25
Standard 8	10/16-18	??

Standard 8 As shown in the above table this standard conflicts with the templates. Also, Section 3.7.8.1.1 and Section 3.7.8.2.1 which specify a 30' radius at the roadway centerline. It is my opinion that a driveway conforming to this standard will not allow safe and efficient fire truck access, particularly with a 10' edge radius and 10' roadway width. In addition, Standard 8 only addresses right angle intersections.

These templates should have been corrected to agree with one another rather than simply removed.

This standard should also detail the minimum public roadway dimensions. A narrow public road will also impact fire truck access to a private road.

This standard would also allow a tight turn with short radius very close (15') to the intersection which would also restrict fire truck access. This situation shall also be subject to Autoturn or turning template analysis.

This standard also references "see templates" but doesn't say which ones, would this be templates 18 to 21?

8. ***Section 4.4.*** *What are the reference documents for the design of the pavement? Is this in the CDOT publications?*

This should also address the current existing pavement structure. Will it hold up to major construction activity, and if so what will be the reduction in the pavement life?

9. ***Section 5.1.10.1.1.*** *Good job to eliminate plastic sign usage.*
10. ***Section 5.1.10.1.4****. Rather than (or equivalent) I would suggest (or ACCEPTED equivalent). Plus you need to clearly state how equivalency will be judged. Will it be judged by physical tests or a simple review of catalog cuts?*

- ***Section6.1.1.*** *There are number of things that should be included in all four levels of analysis,*
  Limits of the area to be analyzed
  Identification of the main access routes to the site
  Identification and analysis of all emergency access routes

  I would only accept the "Letter of Conformance" if it covers all of the regulations currently in force. I have seen some really poor TIS documents submitted to the county and I would not accept them under this clause.

  Add a table summarizing the requirements for each of the 4 levels. This would include the count thresholds etc.

  Add a section to clearly state the requirements for data collection. This would include the following:
  - *Areas covered (project limits)*
  - *Timing of the counts,*
  - *Count types,*
  - *Origin and destination of potential development users,*
  - *Count durations,*
  - *Days when counts shall not be taken unless approved in writing by the County Traffic Engineer.*
  - *Acceptable counting technology and accuracy levels.*
  - *I should also include data (trip tables, O&Ds, growth rates at a minimum) from the DRCOG traffic models.*
  - *Counts shall be continuous for the period specified, gaps in count data shall cause new counts to be taken.*

11. *A table summarizing the analysis for each level should also be considered. Traffic counts younger than 3 years may not be stale based upon the surrounding land use changes/developments.*
12. *The volume thresholds for both a "Transportation Analysis" and a "Traffic Impact Study" are 800 vpd. The "Transportation Analysis" should be eliminated and the TIS shall be completed as a part of the planning process not during the site development process. There isn't enough rigor to the proposed analysis in the*

"Transportation Analysis" to identify the true impact and the infrastructure improvements needed to be included in the site development process. Waiting until the site development process weakens the county ability to control the project. Particularly since the volume threshold is the same for each.

13. ***The "Trip Generation Summary Tables"** should be numbered. They should also include Saturday and Sunday as many land uses peak on the weekend.*
14. *If the Trip Generation Manual doesn't include the subject land use, there shall be at least 3 similar sites studied as required in the manual. The specific requirements for this in the Trip Generation Manual should be cited. You should specify the data to be collected. There shall also be a succinct description of each site as well as identification of who collected the data and when.*

    It is currently suggested that the sites' capacity be used if no similar sites exist. Then who and how will the sites capacity be determined and documented? The number of parking spaces is not a good independent variable.
15. *The use of the Level of Service (LOS) is rather crude indicator of traffic operations.*
    The origins of LOS was as a public relations tool not for quantitative analysis. The Volume Capacity Ratio (V/C) is more illustrative of the actual impacts.

    Consider a facility that operates at a V/C of 0.89 which would map to LOS D yet is just below LOS E. Would that be acceptable? How many hours during the day will the facility operate in the V/C regime? If it is 15 minutes it may be acceptable but 4 hours would clearly not be.
16. *A Traffic Impact Study shall include analysis using the DRCOG models. A simple HCM analysis won't tell the full regional impact of such a large development. For example, large developments with major traffic destinations in the Denver metro area have a significant impact on US 285 traffic in Turkey Creek Canyon and currently is not assessed for traffic impacts.*
17. ***Evacuation Study.** An Evacuation Study <u>shall</u> be included. The recent fires such as the Marshall and the Paradise Fires clearly indicate that evacuation is a major problem. It shall clearly delineate the tributary areas being evacuated and the capacity of each of the evacuation routes. In the mountains and rural areas of the county it should include large vehicles, vehicles evacuating livestock and other large animals as well as recreational vehicles.*
18. ***Appendices.** Appendices to this document should include suggested consultant work scopes for these tasks. Otherwise, there will be no uniformity in the documents submitted to the county. This will require more county staff time to review.*

19. ***Templates.***

- *Template 5 shows a single curb ramp on each corner. The ramps are oriented such that a sight impaired person would be directed into the center of the intersection. This is not a safe design according to the sight impaired community, particularly at signalized intersections. Federal Highways guidance is for two ramps on each corner oriented to a corresponding ramp across the intersection.*
- *Template 8 does not indicate the width of the public road which may not be wide enough to accommodate fire truck access. This was a previous issue that has yet to be resolved.*
- *Templates 16-1 and 16-2 are not included in the table in Section 5.2. They should also be relocated with templates 26-*.*
- *Template 16-2 is clearly a sole source item. To me this is a pretty generic lighting fixture it should not be sole source*
- *Template 16-1 shows several different styles of lighting fixtures therefore there is a conflict with Template 16-2.*
- *Template 26-6 appears to be a direct copy from vendor supplied materials therefore sole source. If another manufacture supplied a pole with the same dimensions as those shown would it be accepted and what would be that process?*
- *Templates 26-1 and 26-9 need to be updated to reference the 2020 Interim Revisions to the LEFD specifications. The changes are significant.*

CONCLUSION

The Committee is hopeful that the above recommendations will help improve the future health, safety, and welfare of both residents, visitors, and travelers in the unincorporated areas of Jefferson County.

Respectfully submitted,

Paul R. Olson, P.E., T.E.
25587 Conifer Road
STE 105-611
Conifer CO 80433
Conifer and South Evergreen Community Committee

Lindsey Wire

From: David Duncan <davidduncn@gmail.com>
Sent: Friday, December 29, 2023 2:22 PM
To: Lindsey Wire
Cc: Chris OKeefe
Subject: --{EXTERNAL}-- Re: Regulation Amendment Case 22-122945AM – Transportation Design and Construction Manual - 2nd Referral
Attachments: d21_curb_opening_details.pdf; m-609-1-curb-gutters-and-sidewalks.pdf

Follow Up Flag: Follow up
Flag Status: Flagged

This Message Is From an External Sender
This message came from outside your organization.
Report Suspicious

Lindsey,

Hope that you had a great Holiday! Here are my comments on the proposed regulation changes:

3.7.8.1.3 Exception for Mountains - 15% grade, spaced by 1,000' and allowance if fire sprinklers are installed - where did these numbers come from? 1,000' separation seems arbitrary, was this input from the Fire Districts? I object to requiring fire sprinklers, why not just grant the exception without that requirement?

3.7.8.1.4 Turnaround - should read "or sufficient space to turn around meeting the same dimensions...." If room is present for the fire truck to turn around nothing further should be required.

3.7.8.2.2 Width - Template 18b allows for width smaller than stated total of 20'. I believe a total width of 18' incl shoulders is sufficient, does not need to be 20', and there are numerous places in the mountains with private drives smaller than 20'.
Template 18d is min total width 14'?

3.7.8.3 Offsite Driveways - BIG OBJECTION, the way this is written for relief of any of the standard dimensions:

1. Submit survey and plan from registered PE - this will cost someone $5-20K to get done.
2. Agree to install sprinklers - est $25K cost

This will create the same situation as when the requirement to prove defensible space for ANY building permit was passed - people stopped applying for building permits. I GUARANTEE you the same will happen with this regulation change.

Suggestion: give P&Z Chair the option to administratively waive requirements, and in doing so he MAY require survey and/or evaluation from an Engineer. Requiring sprinklers is a terrible idea! Let the insurance companies handle that!

Construction Stds - if the County does not already have it they should include stds for:

- Spill (reverse) curb - see attached CDOT Std
- Curb Openings for Drainage - see attached std from CO Springs

Thanks and Happy New year!

David Duncan

On Mon, Dec 11, 2023 at 5:15 PM Lindsey Wire <lwire@co.jefferson.co.us> wrote:

Dear Agency/Interested Party,

Jefferson County Planning & Zoning is proposing a Regulation Amendment process pertaining to the Transportation Design and Construction Manual. This regulation update includes updates to Chapters 3 and 5 as well as updates to the Transportation Studies Appendix, Standard Details, and Templates.

2nd Referral Red-marked drafts can be found in both Word and Adobe PDF formats on our Regulation Revision website and in the case folder (22-122945AM) here [jeffcogov.sharepoint.com].

If you have trouble using the link. Please access the files by navigating to the Jefferson County Citizen Portal, select "Advanced" and search by the Case Number (22-122945) and Permit Type (Regulation Amendment). From there, select "Detail" => "View Public Documents" and navigate to 3. Review Process Agency Comments, 2nd Referral, 1 Referral Documents.

We are very interested in any comments or concerns that you or your agency may have with these proposed changes. If you have any questions, please contact Planning and Zoning Regulation Revisions at PZRegRev@jeffco.us.

Comments are due Friday, December 29, 2023.

Sincerely,

Planning and Zoning Staff

Lindsey Wire, P.E.

Planning & Zoning

Engineering Supervisor

303.271.8717

lwire@jeffco.us | planning.jeffco.us

TOGETHER JEFFCO 2023
County Plans and Regulations Update

Help us shape the future of Jefferson County! Click this image to visit the Together Jeffco Website or type the URL into your browser: https://togetherjeffco.com. From there, you will find ways to provide comments through maps, an idea wall and questionnaires.

[togetherjeffco.com]

JEFFERSON COUNTY COLORADO

We encourage scheduling an appointment to see staff during our office hours Monday - Thursday. Please schedule appointments [outlook.office365.com] and submit applications online. Go to planning.jeffco.us for more information.

Lindsey Wire

From: AUTOMAILER@JEFFCO.US
Sent: Tuesday, December 19, 2023 2:34 PM
To: Lindsey Wire
Cc: Nathan Seymour
Subject: 22 122945 AM - Agency Response

Follow Up Flag: Follow up
Flag Status: Flagged

Case Number: 22 122945 AM
Case Type: Regulation Amendment
Case Name: Transportation and Construction Manual
Review: Engineer (Development Review)
Results: Comments Sent (no further review)
Review Comments: No additional comments at this time. Pending comments received by internal and external agencies modifications may be required.
Scheduled End Date: 19-DEC-23
Reviewer: Nathan Seymour
Description: Regulations Amendment to the Transportation and Construction Manual

Evergreen Fire/Rescue

1802 Bergen Parkway • Evergreen, Colorado 80439
Phone: 303-674-3145 • Fax: 303-674-8701

December 21, 2023

Lindsey Wire, P.E.
Jefferson County Planning & Zoning
100 Jefferson County Parkway
Golden, CO 80401

Re: Transportation Design and Construction Manual Case# 22-122945AM

Ms. Wire:

The 2nd referral redline amendments to the Transportation Design and Construction Manual dated 12/11/2023 were reviewed for by the Evergreen Fire Protection District (the District). The District has the following comments and/or requests for clarification.

1. Section 3.1.8.7.3 Grade

It is specified in the main body of this section that an increase to twelve (12) percent grade is allowed when the terrain is on a southern facing aspect. However, in the exception section that allows an increase to fifteen (15) percent grade with installation of an approved automatic fire sprinkler section it is not specified that the exception applies only on terrain that has a southern facing aspect. Clarification is necessary as to if the exception applies only to southern facing aspects.

2. Southern facing aspects (general)

As a general question, as modifications to grade and other specifications may be granted based upon terrain that has a southern facing aspect; is there any consideration applied to the roadway being shaded or not?

3. Template 18a

Template 18a indicates a 2-foot and 3-foot shoulder dimension on the left side but only a 2-foot on the right side. Could this be clarified of corrected if it is an error?

Please contact me at (303) 679-4746 or via e-mail at kferry@evergreenfirerescue.com if you should have any questions or need further information.

Sincerely,

Kevin Ferry
Fire Marshal

Date: December 29, 2023

To: Lindsey Wire, Jefferson County Planning & Zoning

From: Fran Evers, Jefferson County Horse Council

Subject: Regulation Amendment Case 22-122945AM – Transportation Design and Construction Manual - 2nd Referral

JEFFERSON County HORSE COUNCIL Since 1967
P.O. Box 1177
Golden, CO • 80402-1177

Jefferson County Horse Council is respectively submitting the following comment regarding Regulation Amendment Case 22-122945AM reference above.

Sections 3.7.3.1 and Section 3.7.3.2 regarding right turn acceleration lanes. JCHC would like to recommend that these 'lanes' be required for entrances to and from Equestrian Centers and medium to large boarding stables and equine farms.
Comment: Slowing down sufficiently when trailering live animals to enter these types of facilities poses a traffic hazard and slows traffic down. Having a horse trailer rear ended is an ugly accident often resulting the serious injury to animals in the trailer. Also exiting these facilities without an acceleration lane poses a significant problem for a driver pulling a trailer requiring a significantly larger gap in traffic to safely enter the flow of traffic, thus creating a potential safety issue. A good example is entering and exiting the Arvada Indiana Equestrian Center on 75th and Indiana. We are suggesting this for all road classifications with the possible exemption of 'Local.'

Section 6.4 Transportation Analysis
Section 6.4.2. Format, subparagraph "Projected Traffic" (pg 46) Insert after the 6th sentence:
Consideration should be given to site-specific uses that may result in the need for acceleration or deceleration lanes due to vehicle trips frequently involving larger vehicles or vehicles pulling trailers.

Section 6.4 Transportation Analysis
Section 6.4.2. Format, subparagraph "Analysis" (pg 48) Insert after the 2nd sentence:
Consideration should be given to site-specific safety issues for vehicle/pedestrian, vehicle/bicyclist, and vehicle/equestrian conflict.

Section 6.5 Transportation Impact Studies
Section 6.5.2. Format, subparagraph "Projected Traffic" (pg. 49) Insert after the 5th sentence:

Consideration should be given to site-specific uses that may result in the need for acceleration or deceleration lanes due to vehicle trips frequently involving larger vehicles or vehicles pulling trailers.

Section 6.5 Transportation Impact Studies
Section 6.5.2. Format, subparagraph "Transportation Safety" (pg 50) modify the third sentence of the section to (modified areas in italics): "…improve pedestrian and bicyclist safety and minimize *vehicle/pedestrian, vehicle/bicyclist, and vehicle/equestrian conflict points."*

Section 6.5.2 Format>Factors – Add Equestrian to bullet point 9: 'Pedestrian, Equestrian and Bicycle Movements/Continuity of Factors.'
Comment: The presence and movement of equines within a certain area of a proposed development should be considered just as it is for pedestrians and bicycles. The traditional 'paths' used by equestrians have vanished over the past 30 years in the more populated areas of Jefferson County such as Lakewood, Arvada, Littleton and Golden disallowing equestrian the ability to safely ride from the location where their animal is kept to a park or trail. This was tragically brought home in the accident that occurred in Arvada requiring Griffin to be euthanized at the sight of the accident and injuring his heartbroken owner. JCHC along with other area horse associations and clubs would be more than willing to participate in helping to define areas in Jefferson County that have an equine presence.

Section 6.5.2 Format>Signalized Intersection: Level of Service – Add Equestrian to bullet point 10: 'Bicycle, pedestrian and equine flows'
Comment: Same as Format>Factors comment above.

Section 6.5.2 Format>Roundabouts – Add Equestrian to bullet point 10: "bicycle, pedestrian and equestrian flows.'
Comment: Same as Format>Factors comment above.

General Comment: We recommend adding 'equestrian' to any place in this regulation that has 'bicycle and pedestrian.'

Appendix

Section 3. Transportation Analysis
Subparagraph "Projected Traffic" (pg 62) Insert after the 5th sentence: *Consideration should be given to site-specific uses that may result in the need for acceleration or deceleration lanes due to vehicle trips frequently involving larger vehicles or vehicles pulling trailers.*

Section 3. Transportation Analysis
Example Outline

Subparagraph "Analysis" (pg 65) Insert after last existing sentence of the section: *Consideration should be given to site-specific safety issues for vehicle/pedestrian, vehicle/bicyclist, and vehicle/equestrian conflict.*

Section 4. Transportation Impact Studies
SubSection B. Format
Subparagraph "Projected Traffic" (pg 66 & 67) Insert after 4th sentence of the section: *Consideration should be given to site-specific uses that may result in the need for acceleration or deceleration lanes due to vehicle trips frequently involving larger vehicles or vehicles pulling trailers.*

Section 4. Transportation Impact Studies
SubSection B. Format
Subparagraph "Transportation Safety" (pg 68) modify the third sentence of the section to (modified areas in italics): "…improve pedestrian and bicyclist safety and minimize *vehicle/pedestrian, vehicle/bicyclist, and vehicle/equestrian conflict points."*

Traffic Counts> 4. Transportation Impact Study>Transportation Analysis>Factors – Add Equestrians to bullet point 9: 'Pedestrian, Equine and Bicycle Movement/Continuity of Facilities.
Comment: Same as Format>Factors comment above

Transportation Analysis>Signalized Intersections – Add equestrians to bullet point 10: bicycles, pedestrian and equine flows.' Also if there is a manual pedestrian 'control button' to stop traffic, an equestrian rider height manual 'control button' should be made available to accommodate mounted equestrians.
Comment: Same as Format>Factor comment above. Also, having a 'control button' that is equestrian rider height provides a much safer way for an equestrian to pause traffic. Reaching over to push a button designed for pedestrians especially pedestrians confined to wheelchairs/scooters while controlling a 1000# plus animal can be challenging. Dismounting, leading the equine across the road and mounting on the other side of the road also poses a safety issue as an equestrian is in the most dangerous position when mounting and dismounting. Allowing equestrians to safely and quickly cross a road while mounted is the safest solution for both the rider and the traffic.

Transportation Analysis>Roundabouts – Add equestrian to bullet point 8: 'bicycle, pedestrian and equine flows.'
Comment: Same as Format>Factor comment above.

Our reviewers had a few additional comments and we're not quite sure where they should be placed as recommendations in this document. They are as follows:

> Consider defining and adding 'Equestrian Infrastructure' similar to 'Bicycle Infrastructure.' JCHC would be willing to provide input this.

Consider developing road design standards for street crossings utilized by equestrians. JCHC could provide design recommendations on this. Equine depth perception is quite different than human depth perception. Horses can perceive the white stripes across a road that are often used to indicate a pedestrian or game crossing as a 'cattle guard' or something dangerous and refuse to walk across the lines possibly shying into traffic.

Consider additional signage to alert drives that equestrians may be in the area. We understand signage is expensive and some criteria would need to be established for the placement of this type of signage if such criteria does not already exist. We do see some of these types of signs throughout the county which is appreciated. JCHC would be willing to provide input and recommendations including possible locations.

Consider adding rumble strips around stop signs and along roads that don't have sidewalks or shoulders to alert drivers and help keep pedestrians and equestrian safe. The tragic equine/auto accident mentioned above might have been prevented had rumble strips been present at the stop sign. It is our understanding that the driver was distracted in some way and ran the stop sign thus hitting the horse and rider. Rumble strips might have drawn his attention back to the road and the upcoming stop sign.

Thank you for allowing JCHC to provide input into this regulation. If you have any questions, please feel free to contact us.

Frank Blaha, JCHC President
fjblaha@gmail.com 303-895-7982

Fran Evers, JCHC Treasurer and Land Use Committee Chairperson
Franevers18@gmail.com 303-817-4818

Respectively submitted,

Fran Evers

Lindsey Wire

From: Mary Beth Mainero <marybethmainero@gmail.com>
Sent: Thursday, December 14, 2023 6:56 PM
To: PZ-Regulation-Revisions
Cc: Jordan Wells; Lacombe - CDOT, Christiana; MikWhi@lakewood.org
Subject: --{EXTERNAL}-- Case #2-122945AM Jeffco. Planning and Zoning
Attachments: image001.png

Follow Up Flag: Follow up
Flag Status: Flagged

This Message Is From an External Sender
This message came from outside your organization.

Report Suspicious

I received the following from our HOA (MSI) who thought this might be part of my outreach to CDOT and City of Lakewood for a crosswalk, light and turning lane into our community, Red Rocks Ranch, Morrison Road and Girton (Rooney Road).

Please let me know.

"Dear Agency/Interested Party,

Jefferson County Planning & Zoning is proposing a Regulation Amendment process pertaining to the Transportation Design and Construction Manual. This regulation update includes updates to Chapters 3 and 5 as well as updates to the Transportation Studies Appendix, Standard Details, and Templates.

2nd Referral Red-marked drafts can be found in both Word and Adobe PDF formats on our Regulation Revision website [linkprotect.cudasvc.com]and in the case folder (22-122945AM) here [linkprotect.cudasvc.com].

If you have trouble using the link. Please access the files by navigating to the Jefferson County Citizen Portal [linkprotect.cudasvc.com], select "Advanced" and search by the Case Number (22-122945) and Permit Type (Regulation Amendment). From there, select "Detail" => "View Public Documents" and navigate to 3. Review Process Agency Comments, 2nd Referral, 1 Referral Documents.

We are very interested in any comments or concerns that you or your agency may have with these proposed changes. If you have any questions, please contact Planning and Zoning Regulation Revisions at PZRegRev@jeffco.us.

Comments are due Friday, December 29, 2023.

Sincerely,

Planning and Zoning Staff"

Respectfully,

Mary Beth Mainero

Resident and Representative of Red Rocks Ranch, Morrison

Lindsey Wire

From: Elizabeth Stoner
Sent: Wednesday, December 20, 2023 1:17 PM
To: Lindsey Wire
Subject: RE: Regulation Amendment Case 22-122945AM – Transportation Design and Construction Manual - 2nd Referral

Follow Up Flag: Follow up
Flag Status: Flagged

Perfect! Here is what we have so far:

- Change flagmen to flaggers on page 8
  - 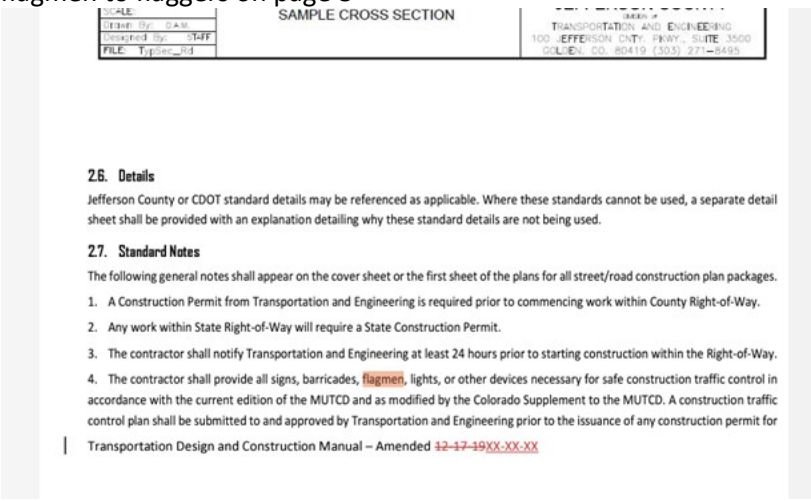

    SAMPLE CROSS SECTION

    2.6. Details

    Jefferson County or CDOT standard details may be referenced as applicable. Where these standards cannot be used, a separate detail sheet shall be provided with an explanation detailing why these standard details are not being used.

    2.7. Standard Notes

    The following general notes shall appear on the cover sheet or the first sheet of the plans for all street/road construction plan packages.

    1. A Construction Permit from Transportation and Engineering is required prior to commencing work within County Right-of-Way.
    2. Any work within State Right-of-Way will require a State Construction Permit.
    3. The contractor shall notify Transportation and Engineering at least 24 hours prior to starting construction within the Right-of-Way.
    4. The contractor shall provide all signs, barricades, flagmen, lights, or other devices necessary for safe construction traffic control in accordance with the current edition of the MUTCD and as modified by the Colorado Supplement to the MUTCD. A construction traffic control plan shall be submitted to and approved by Transportation and Engineering prior to the issuance of any construction permit for

    Transportation Design and Construction Manual – Amended ~~12-17-19~~XX-XX-XX
- Ensure the Minimum Sight Distance Requirements Table on page 17 is on 1 page and don't let the header get cut off on a different page. General comment for all tables.
- Number/Label figures and tables
- 5.1.7.1 and 5.1.7.3 are almost identical. Can one be removed, or can they be combined?
- STND numbers in the document don't match the drawings.

If there are additional questions or comments on this application while I'm out of office, they will likely come from Scot Grossman.

Thanks and Happy Holidays!

Elizabeth Stoner
Planner
Pronouns: She, her, hers
260.715.2047 cell, jeffco.us

JEFFERSON COUNTY COLORADO
Open Space

From: Lindsey Wire <lwire@co.jefferson.co.us>
Sent: Wednesday, December 20, 2023 1:08 PM
To: Elizabeth Stoner <estoner@co.jefferson.co.us>
Subject: RE: Regulation Amendment Case 22-122945AM – Transportation Design and Construction Manual - 2nd Referral

If you can email them that is perfect!

Thanks,

Lindsey Wire, P.E.
Planning & Zoning
Engineering Supervisor
303.271.8717
lwire@jeffco.us | planning.jeffco.us

TOGETHER JEFFCO 2023
County Plans and Regulations Update

Help us shape the future of Jefferson County! Click this image to visit the Together Jeffco Website or type the URL into your browser: https://togetherjeffco.com. From there, you will find ways to provide comments through maps, an idea wall and questionnaires.

JEFFERSON COUNTY COLORADO

We encourage scheduling an appointment to see staff during our office hours Monday - Thursday. Please schedule appointments and submit applications online. Go to planning.jeffco.us for more information.

From: Elizabeth Stoner <estoner@co.jefferson.co.us>
Sent: Wednesday, December 20, 2023 1:07 PM
To: Lindsey Wire <lwire@co.jefferson.co.us>
Subject: RE: Regulation Amendment Case 22-122945AM – Transportation Design and Construction Manual - 2nd Referral

In the meantime, we do have some comments / questions for the review. Would you like me to put these into AMANDA or email them to you directly?

Elizabeth Stoner
Planner
Pronouns: She, her, hers
260.715.2047 cell, jeffco.us

JEFFERSON COUNTY COLORADO
Open Space

From: Elizabeth Stoner
Sent: Wednesday, December 20, 2023 12:50 PM
To: Lindsey Wire <lwire@co.jefferson.co.us>
Subject: RE: Regulation Amendment Case 22-122945AM – Transportation Design and Construction Manual - 2nd Referral

Awesome -thanks, Lindsey!

Elizabeth Stoner
Planner
Pronouns: She, her, hers
260.715.2047 cell, jeffco.us

JEFFERSON COUNTY COLORADO
Open Space

From: Lindsey Wire <lwire@co.jefferson.co.us>
Sent: Wednesday, December 20, 2023 12:01 PM
To: Elizabeth Stoner <estoner@co.jefferson.co.us>
Subject: RE: Regulation Amendment Case 22-122945AM – Transportation Design and Construction Manual - 2nd Referral

Hi Elizabeth,

That works for me!

Thanks!

Lindsey Wire, P.E.
Planning & Zoning
Engineering Supervisor
303.271.8717
lwire@jeffco.us | planning.jeffco.us

TOGETHER JEFFCO 2023
County Plans and Regulations Update

Help us shape the future of Jefferson County! Click this image to visit the Together Jeffco Website or type the URL into your browser: https://togetherjeffco.com. From there, you will find ways to provide comments through maps, an idea wall and questionnaires.

JEFFERSON COUNTY COLORADO

We encourage scheduling an appointment to see staff during our office hours Monday - Thursday. Please schedule appointments and submit applications online. Go to planning.jeffco.us for more information.

From: Elizabeth Stoner <estoner@co.jefferson.co.us>
Sent: Wednesday, December 20, 2023 9:34 AM
To: Lindsey Wire <lwire@co.jefferson.co.us>
Subject: Regulation Amendment Case 22-122945AM – Transportation Design and Construction Manual - 2nd Referral

Hey Lindsey,

I'm going to be out of the office starting tomorrow until the new year. Our Projects Team is still reviewing the proposed updates to the Transportation Design and Construction Manual and I know comments will be due before I get back to the office.

Can I have our Projects Team Supervisor email you directly once his team has had the chance to review the proposed changes?

Thanks!

Elizabeth Stoner
Planner
Pronouns: She, her, hers
260.715.2047 cell, jeffco.us

JEFFERSON COUNTY COLORADO
Open Space

Lindsey Wire

From: Carlos Atencio
Sent: Friday, December 22, 2023 9:00 AM
To: Lindsey Wire; Chris OKeefe; Cassidy Clements
Cc: Nathan Seymour
Subject: RE: DEVREV for Sign-off

Follow Up Flag: Follow up
Flag Status: Flagged

Yes, this is for edge drains, curb drains, or any other drainage systems that are proposed in new development for Road & Bridge to maintain in the future.

Carlos Atencio

Operations Manager

o 303.271.5204 f 303.271.5222 w **jeffco.us**

From: Lindsey Wire <lwire@co.jefferson.co.us>
Sent: Thursday, December 21, 2023 9:54 AM
To: Chris OKeefe <cokeefe@co.jefferson.co.us>; Cassidy Clements <cclement@co.jefferson.co.us>
Cc: Carlos Atencio <catencio@co.jefferson.co.us>; Nathan Seymour <nseymour@co.jefferson.co.us>
Subject: RE: DEVREV for Sign-off

Hi Carlos,

Would you mind providing us with a little more detail regarding this comment? Is this for edge drains? Another question would be if this is for ROW and private or just ROW? We can definitely get this added once T&E sends over the changes but we will need to get them in the next few weeks in order to meet our timeline for hearings.

Thanks!

Lindsey Wire, P.E.
Planning & Zoning
Engineering Supervisor
303.271.8717
lwire@jeffco.us | planning.jeffco.us

TOGETHER JEFFCO 2023
County Plans and Regulations Update

Help us shape the future of Jefferson County! Click this image to visit the Together Jeffco Website or type the URL into your browser: https://togetherjeffco.com. From there, you will find ways to provide comments through maps, an idea wall and questionnaires.

JEFFERSON COUNTY COLORADO

We encourage scheduling an appointment to see staff during our office hours Monday - Thursday. Please schedule appointments and submit applications online. Go to planning.jeffco.us for more information.

From: Chris OKeefe <cokeefe@co.jefferson.co.us>
Sent: Thursday, December 21, 2023 8:42 AM
To: Lindsey Wire <lwire@co.jefferson.co.us>; Cassidy Clements <cclement@co.jefferson.co.us>
Cc: Carlos Atencio <catencio@co.jefferson.co.us>
Subject: FW: DEVREV for Sign-off

Does this make sense? Please reach out to Carlos if we need more info.
Thanks,
Chris

Chris O'Keefe, AICP
(he, him, his)
Planning and Zoning Director
Jefferson County
o 303-271-8713
cokeefe@jeffco.us | Find us on the web: planning.jeffco.us

TOGETHER JEFFCO 2023
County Plans and Regulations Update

Help us shape the future of Jefferson County! Click this image to visit the Together Jeffco Website or type the URL into your browser: https://togetherjeffco.com. From there, you will find ways to provide comments through maps, an idea wall and questionnaires.

We encourage scheduling an appointment to see staff during our office hours Monday - Thursday. Please schedule appointments and submit applications online. Go to planning.jeffco.us for more information.

JEFFERSON COUNTY COLORADO

From: Carlos Atencio <catencio@co.jefferson.co.us>
Sent: Thursday, December 21, 2023 7:54 AM
To: Lindsay Townsend <ltownsen@co.jefferson.co.us>; Christina Lane <clane@co.jefferson.co.us>; Levi LaGuardia <llaguard@co.jefferson.co.us>; Kelly Dunne <kdunne@co.jefferson.co.us>; Mike Vanatta <mvanatta@co.jefferson.co.us>; Ramey Fox <rfox@co.jefferson.co.us>; Robert Taylor <rbtaylor@co.jefferson.co.us>; Stefi Szrek <sszrek@co.jefferson.co.us>
Cc: Domingo Lora <dlora@co.jefferson.co.us>; Gene Bennetts <gbennett@co.jefferson.co.us>; Mike Secary <msecary@co.jefferson.co.us>; Chris OKeefe <cokeefe@co.jefferson.co.us>
Subject: RE: DEVREV for Sign-off

Good morning,

Road & Bridge is requesting the expansion or addition of language to Section 5.1.8.1 to include tracer wires to curb drains. Installation details would also have to be included. I believe the T&E group is currently working on the installation details.

Please let me know how we can help.

Thank you,

Carlos Atencio

Operations Manager

o 303.271.5204 f 303.271.5222 w **jeffco.us**

From: Lindsay Townsend <ltownsen@co.jefferson.co.us>
Sent: Wednesday, December 20, 2023 3:51 PM
To: Christina Lane <clane@co.jefferson.co.us>
Subject: DEVREV for Sign-off

Hi Christina,

Looks like there is only on DEVREV for sign-off today. It is TE_12-29-2023 22-122945 AM Transportation Design and Construction Manual.docx.

If you think everything looks good, please let me know and I'll send it to P&Z.

Thank you,

Lindsay Townsend
Administrative Coordinator Sr.

Jefferson County
100 Jefferson County Parkway, Suite 3500
Golden, CO 80419
o 303.271.8461
ltownsen@jeffco.us

JEFFERSON COUNTY COLORADO | Transportation and Engineering

Find us on the web: **www.jeffco.us**
Facebook | **Twitter** | **Instagram**

From: Levi LaGuardia <llaguard@co.jefferson.co.us>
Sent: Wednesday, December 20, 2023 11:33 AM
To: Lindsay Townsend <ltownsen@co.jefferson.co.us>; Christina Lane <clane@co.jefferson.co.us>; Kelly Dunne <kdunne@co.jefferson.co.us>; Mike Vanatta <mvanatta@co.jefferson.co.us>; Ramey Fox <rfox@co.jefferson.co.us>; Robert Taylor <rbtaylor@co.jefferson.co.us>; Stefi Szrek <sszrek@co.jefferson.co.us>
Subject: Re: DEVREV: Regulation Amendment Case 22-122945AM – Transportation Design and Construction Manual - 2nd Referral - Due 12/29

TOP review is complete!

All the Best,

Levi LaGuardia, EIT
Associate Transportation Engineer
Jefferson County Transportation and Engineering
100 Jefferson County Pkwy, Suite 3500 | Golden, CO 80419
(303) 271-8471 | llaguard@jeffco.us

JEFFERSON COUNTY COLORADO

From: Lindsay Townsend <ltownsen@co.jefferson.co.us>
Sent: Tuesday, December 12, 2023 7:32 AM
To: Christina Lane <clane@co.jefferson.co.us>; Kelly Dunne <kdunne@co.jefferson.co.us>; Levi LaGuardia <llaguard@co.jefferson.co.us>; Mike Vanatta <mvanatta@co.jefferson.co.us>; Ramey Fox <rfox@co.jefferson.co.us>; Robert Taylor <rbtaylor@co.jefferson.co.us>; Stefi Szrek <sszrek@co.jefferson.co.us>
Subject: DEVREV: Regulation Amendment Case 22-122945AM – Transportation Design and Construction Manual - 2nd Referral - Due 12/29

Good morning,

Please see Lindsey Wire's below email.

Here is the comment form: TE_12-29-2023 22-122945 AM Transportation Design and Construction Manual.docx

---

From: Lindsey Wire <lwire@co.jefferson.co.us>
Sent: Monday, December 11, 2023 5:15 PM
To: PZ-Regulation-Revisions <PZRegRev@co.jefferson.co.us>
Subject: Regulation Amendment Case 22-122945AM – Transportation Design and Construction Manual - 2nd Referral

Dear Agency/Interested Party,

Jefferson County Planning & Zoning is proposing a Regulation Amendment process pertaining to the Transportation Design and Construction Manual. This regulation update includes updates to Chapters 3 and 5 as well as updates to the Transportation Studies Appendix, Standard Details, and Templates.

2nd Referral Red-marked drafts can be found in both Word and Adobe PDF formats on our Regulation Revision website and in the case folder (22-122945AM) here.

If you have trouble using the link. Please access the files by navigating to the Jefferson County Citizen Portal, select "Advanced" and search by the Case Number (22-122945) and Permit Type (Regulation Amendment). From there, select "Detail" => "View Public Documents" and navigate to 3. Review Process Agency Comments, 2nd Referral, 1 Referral Documents.

We are very interested in any comments or concerns that you or your agency may have with these proposed changes. If you have any questions, please contact Planning and Zoning Regulation Revisions at PZRegRev@jeffco.us.

Comments are due Friday, December 29, 2023.

Sincerely,

Planning and Zoning Staff

Lindsey Wire, P.E.
Planning & Zoning
Engineering Supervisor
303.271.8717
lwire@jeffco.us | **planning.jeffco.us**

TOGETHER JEFFCO 2023
County Plans and Regulations Update

Help us shape the future of Jefferson County! Click this image to visit the Together Jeffco Website or type the URL into your browser: https://togetherjeffco.com. From there, you will find ways to provide comments through maps, an idea wall and questionnaires.

JEFFERSON COUNTY COLORADO

We encourage scheduling an appointment to see staff during our office hours Monday - Thursday. Please schedule appointments and submit applications online. Go to planning.jeffco.us for more information.

Lindsey Wire

From: AUTOMAILER@JEFFCO.US
Sent: Tuesday, December 12, 2023 10:24 AM
To: Lindsey Wire
Cc: Mark Weiden
Subject: 22 122945 AM - Agency Response

Follow Up Flag: Follow up
Flag Status: Flagged

Case Number: 22 122945 AM
Case Type: Regulation Amendment
Case Name: Transportation and Construction Manual
Review: Road & Bridge
Results: No Comment (no further review)
Review Comments:
Scheduled End Date: 19-DEC-23
Reviewer: Mark Weiden
Description: Regulations Amendment to the Transportation and Construction Manual

Lindsey Wire

From: Steve Smith <Steven.Smith@RTD-Denver.com>
Sent: Wednesday, December 27, 2023 10:23 AM
To: Lindsey Wire
Subject: --{EXTERNAL}-- RE: Regulation Amendment Case 22-122945AM – Transportation Design and Construction Manual - 2nd Referral

Follow Up Flag: Follow up
Flag Status: Flagged

This Message Is From an External Sender
This message came from outside your organization.
Report Suspicious

Lindsey,

RTD staff have reviewed this proposal and have no comments at this time.

Thanks,

Steve Smith
Engineer III
Capital Programs, Engineering Design
he | him | his [mypronouns.org]
o 303.299.6946 **m** 720.296.4929
steven.smith@rtd-denver.com
rtd-denver.com [rtd-denver.com]

Regional Transportation District
1660 Blake Street, BLK-21
Denver, CO 80202

We make lives better through connections.

From: Lindsey Wire <lwire@co.jefferson.co.us>
Sent: Monday, December 11, 2023 5:15 PM
To: PZ-Regulation-Revisions <PZRegRev@co.jefferson.co.us>
Subject: Regulation Amendment Case 22-122945AM – Transportation Design and Construction Manual - 2nd Referral

Dear Agency/Interested Party,

Jefferson County Planning & Zoning is proposing a Regulation Amendment process pertaining to the Transportation Design and Construction Manual. This regulation update includes updates to Chapters 3 and 5 as well as updates to the Transportation Studies Appendix, Standard Details, and Templates.

2nd Referral Red-marked drafts can be found in both Word and Adobe PDF formats on our Regulation Revision website and in the case folder (22-122945AM) here [jeffcogov.sharepoint.com].

If you have trouble using the link. Please access the files by navigating to the Jefferson County Citizen Portal, select "Advanced" and search by the Case Number (22-122945) and Permit Type (Regulation Amendment). From there, select "Detail" => "View Public Documents" and navigate to 3. Review Process Agency Comments, 2nd Referral, 1 Referral Documents.

We are very interested in any comments or concerns that you or your agency may have with these proposed changes. If you have any questions, please contact Planning and Zoning Regulation Revisions at PZRegRev@jeffco.us.

Comments are due Friday, December 29, 2023.

Sincerely,

Planning and Zoning Staff

Lindsey Wire, P.E.
Planning & Zoning
Engineering Supervisor
303.271.8717
lwire@jeffco.us | **planning.jeffco.us**

TOGETHER JEFFCO 2023
County Plans and Regulations Update

Help us shape the future of Jefferson County! Click this image to visit the Together Jeffco Website or type the URL into your browser: https://togetherjeffco.com. From there, you will find ways to provide comments through maps, an idea wall and questionnaires.

[togetherjeffco.com]

JEFFERSON COUNTY COLORADO

We encourage scheduling an appointment to see staff during our office hours Monday - Thursday. Please schedule appointments [outlook.office365.com] and submit applications online. Go to planning.jeffco.us for more information.

1. Does newly added section 3.7.8.8. All rules and regulations of the applicable Fire Protection District shall govern, give the fire district, in this case South Metro Fire Rescue, the ability to enforce the adopted fire code within our jurisdiction, or are new developments required to follow the new transportation design guild?

2. If the fire code is enforceable within the fire protection district boundaries, as adopted by the Board of County Commissioners, then our only comment is item #3. If the transportation design guild is required to be used in leu of the adopted fire code, then we have major concerns with the new templates, specifically 18A-D, and will have several more comments to add.

3. We would like to add Emergency and Fire Apparatus Access to the signalized intersection list and the roundabout list.

JEFFERSON COUNTY COLORADO
Transportation and Engineering

P&Z REFERRAL T&E RESPONSE

To: Lindsey Wire
Case #:22-122945 AM
Case Name, Address, or PIN: Transportation Design and Construction Manual

From: Transportation & Engineering
Due Date: December 29, 2023

Amanda Attempt Result & Attachments:
☐ Comments Sent (no further review)
☐ Comments Sent (request re-review)
☒ No Comment (no further review)

Drainage

☐ T&E is currently working on a project in the area. See attached information.
☐ No concerns.
☐ Other Notes:

Right-of-Way / Roadway Corridor Expansion Projects

☒ **Corridor Projects / ROW**

☐ Land owner will need to refund the county $ for ROW purchased in for
This amount ***must*** be paid before plat is recorded and / or plans are approved and released for construction.
☐ Documentation attached in AMANDA. ☐ Documentation to follow.
☐ Additional ROW needed for upcoming T&E project. Plan sheet attached with required width / area.
☐ Fee-in-lieu of adjacent roadway construction preferred, due to planned construction by the county. Please have the applicant submit a cost estimate.
☒ No Concerns.
☐ Other Notes:

Traffic Operations / Transportation Planning

☒ **Transportation Planning**
☒ **Transportation Engineering**

	Included in referral	Reviewed	
		No	Yes
Traffic Study	☐	☐	☐
Signage & Striping Plan	☐	☐	☐
Traffic Signal Plans	☐	☐	☐
Trails or Sidewalks	☐	☐	☐
Street / Road Plans	☐	☐	☐

☒ No Concerns.
☐ Other Notes:

Additional Comments

☐ **Name:**

Comments:

☐ **Name:**

Comments:

Right of Way & Permits

1123 West 3rd Avenue
Denver, Colorado 80223
Telephone: **303.571.3306**
Facsimile: 303. 571. 3284
donna.l.george@xcelenergy.com

December 19, 2023

Jefferson County Planning and Zoning
100 Jefferson County Parkway, Suite 3550
Golden, CO 80419

Attn: Lindsey Wire

Re: Regulation Amendment - Transportation Design and Construction Manual – 2nd referral, Case # 22-122945AM

Public Service Company of Colorado's (PSCo) Right of Way & Permits Referral Desk has reviewed the second referral documentation for **Transportation Design and Construction Manual**. Please be aware PSCo owns and operates existing natural gas and electric *distribution* and *transmission* facilities within and throughout Jefferson County and has no objection to these proposals, contingent upon the following:

1. PSCo's ability to maintain all existing rights and this amendment should not hinder our ability for future expansion, including all present and any future accommodations for natural gas transmission and electric transmission related facilities, and that our current use/enjoyment of the area would continue to be an accepted use on the property and that it be "grandfathered" into these changes.

2. Please note that no structures are allowed within utility easements, and the widening of roadways in no way changes the standard required width of utility easements on private property.

3. Bear in mind that per the National Electric Safety Code, a minimum 10-foot radial clearance must be maintained at all times from all overhead electric facilities including, but not limited to, construction activities and permanent structures.

4. Note that proper clearances must be maintained including ground cover that should not be modified from original depths. Contact Colorado 811 before excavating. Use caution and hand dig when excavating within 18-inches of each side of the marked facilities. Please be aware that all risk and responsibility for this request are unilaterally that of the Applicant/Requestor.

Donna George
Right of Way and Permits
Public Service Company of Colorado dba Xcel Energy
Office: 303-571-3306 – Email: donna.l.george@xcelenergy.com

3RD REFERRAL COMMENTS

Agency	3rd Referral Comments and Response Log	Response
CDOT	No Comments	Acknowledged
DWR	No Comments	Acknowledged
Ken Caryl Ranch	Good morning. The new Library is located in Ken-Caryl Ranch (as you know) and so our Architectural Committee will be need to be involved in any exterior changes - which I know this is not so much that specifically. Ken-Caryl Ranch is working on new street signs for the entire business park and has an agreement with Jefferson County for them to be branded with the KC logo and be brown and white vs. standard green/white. Would love to work with you all during this project to incorporate the KC branded/colored signs. Please let me know how we can work together and what you need from me.	Thank you for your email. I reached out to our Transportation and Engineering Team regarding your comment and received the following response: “Thanks for sending this my way. No, this does not need to be incorporated as a regulation. We don't want every custom sign we approve for metro districts or HOAs to be inserted into the TDCM as a regulation. The metro district has their approved templates and they are the only ones using those and are allowed to use those; putting them in the TDCM would imply they could be broadly applied. We also don't want to encourage rogue installation of custom signs based on KCR logos being in our regs. Any metro district that presents custom neighborhood street signs to T&E goes through a review process to ensure MUTCD compliance. Once they get our approval, we just enter a license agreement for them to maintain the signs.” Thank you and please let me know if you have any additional questions!

Tate	While I have no comments on the proposed modifications, I did want to commend you for sending an informative email containing sufficient information. Most of the county emails I receive require multiple reloads to even find out what they are about. Your email was a welcome exception. THANK YOU!	Acknowledged
County Geologist	Text & detail for edge drains has been revised. No additional comments for this AM	Acknowledged
Planning Engineering	No comment.	Acknowledged
Public Health	Jefferson County Public Health has reviewed the changes submitted for the third referral of this case and has no comments or suggestions for these proposed changes.	Acknowledged
Douglas County	No comment	Acknowledged
Jeffco Transportation and Engineering	No comment	Acknowledged
RTD	No Exceptions	Acknowledged
PSCO	No objections	Acknowledged

Jeffco Planning	LDR Section 15 Have we considered a lower number of residential units allowed for a cul de sac? At least in the high hazard areas of the County. Allowing 30 SF or 100 MF can be significant along narrow roads in the mountain communities. TDCM How will we enforce the certification requirements for Transportation Info and Trip Gen Memo? Is it at the discretion of T&E? I realize we are not requiring an engineer's stamp but the proposed language is a bit vague.	We have considered this however it is planned to be looked at with the ULUC process and not with the TDCM update. We are looking for input from the Regulation Update Team on what would make sense going forward. My understanding from T&E is that it will be at their discretion/review. The expectation is that they will use the ITE manual to prepare these documents, and T&E will know pretty quickly if it wasn't.
Evergreen Fire	1. Transportation Design and Construction Manual The fire district has no additional edits or additions to section 3.7.8 and supports the redlines for approval as written. 2. Land Development Regulation Section 15 The fire district has no comments for the updates to this document and supports the redlines for approval as written. 3. Zoning Resolution Sections 2 and 16 The fire district has no comments for the updates to this document and supports the redlines for approval as written. 4. Storm Drainage Design and Technical Criteria The fire district concurs with removal of fire district approval for alternate overtopping depth and supports the redlines for approval as written.	Acknowledged
Bear Creek Water and Sanitation	No comments	Acknowledged
CORE	No comments	Acknowledged
Building Safety	No comments	Acknowledged

CoSECC (Olson)	This section should contain a description of why these specifications are here and what the county hopes to achieve. Should also include statements of how any submittal will be judged by staff.	This is all within Section 1 (General Provisions)
	The word “should” is used throughout the document. This is not an appropriate word to use in a regulatory document, as it is legally unenforceable. The correct words to use are Shall or Must.	This is being addressed with these updates.
	The document should include discussion and presentation of the requirements for a “Clear Zone” where errant vehicles can safely recover without striking a hard impediment. https://highways.dot.gov/safety/rwd/provide-safe-recovery/clear-zones/clear-zones This will impact design requirements for roadway construction and reconstruction. This is also included in the CDOT Roadway Design Guide, Chapter 7 section 7.1.1.1.2, 7.2.1.16 and Chapter 13, 13.5.5.1. It also has a significant presence in the AASHTO Roadside Design Guide and the FHWA/AASHTO Highway Safety Manual. This is particularly important for the safety of motorists traveling on Jefferson County rural roads.	For most roadways in the County, especially in rural areas, the FHWA - following the AASHTO Design Guide - recommends a clear zone of 7-10 feet. Jefferson County standards require a minimum of a 3-foot shoulder (4 ft on Collectors), plus an additional 4 feet in which the outside slope can not exceed 4:1, creating a clear zone of a minimum of 7 feet. In areas where this is not possible due to extreme geometric conditions, the County uses other strategies such as guardrail, rumble strips, and advanced warning signage
	In general, the Traffic Study portion of the document is greatly improved. It still needs work to clarify specific portions. My professional opinion is that it is headed in the right direction.	Acknowledged
	Traffic data volume collection shall always include weekday and weekend counts. The reports shall include an analysis of the impact at all these times.	Typically, the heaviest traffic generation is on weekdays. However, in unique circumstances where there is higher trip generation on a weekend or outside standard peak hours, County staff will request additional analysis be completed. Applying this as a requirement across all applicants is unnecessary.

The study of future impacts shall take into account adjacent future developments and those proposed. Adjacent land shall be judged by allowable land use.	This is accounted for in the DRCOG growth model which uses agency comprehensive plan data (proposed zoning/land use), demographics, etc. to determine growth on a corridor. Staff is aware of specific areas where DRCOG data is inaccurate and, in those circumstances, staff requests additional traffic studies be incorporated. Outside these unique circumstances, adjacent proposed developments being included in addition to the growth model would be double counting other developments and deflate the potential impacts associated with the study being analyzed.
Section 6.2.1 Delete the last sentence. Any analysis using the HCM and/or Trip Generation Manual shall be done under the supervision of qualified and experienced transportation professional.	This section will be retained to ensure applicants are aware that they do not need to provide a PE stamp when providing Transportation Information, as is required with TIS.

There are number of things that should be included in all four levels of analysis, Limits of the area to be analyzed oIdentification of the main access routes to the site oI would only accept the “Letter of Conformance” if it covers all of the regulations currently in force. I have seen some really poor TIS documents submitted to the county and I would not accept them under this clause. oAdd a section to clearly state the requirements for data collection. This would include the following: oAreas covered (project limits) oTiming of the counts, oCount types, oOrigin and destination of potential development users, oCount durations, oDays when counts shall not be taken unless approved in writing by the County Traffic Engineer. oAcceptable counting technology and accuracy levels. oI should also include data (trip tables, O&Ds, growth rates at a minimum) from the DRCOG traffic models. oCounts shall be continuous for the period specified, gaps in count data shall cause new counts to be taken.	The main access of a site is not determined at rezone and will not be required for all four levels of analysis. Site access analysis is always required for TIS (SDP and Plat). Staff supports only accepting a LOC if all current regulations are currently met. Traffic data collection requirements are outlined in 6.1 and address most of these requests, but certain requests for what is to be included is too contextual and is covered with applicants at the pre-application phase (project limits, count types, duration (weekends)). Additional data requests, while they may be within industry best practices, are unattainable for applicants and for formal staff review (O&Ds, count technology, etc). Language exists allowing the County to request additional data under staff discretion. This circumstance is generally rare and in a variety of contexts would not change the outcome of a study.
A table summarizing the analysis for each level should also be considered. Traffic counts younger than 3 years may not be stale based upon the surrounding land use changes/developments.	A table was added in 6.1.1. Staff will not consider studies older than three years due to significant changes seen in the region and the infeasible request for staff to determine what land uses have changed in the area over the past three years.

2.The volume thresholds for both a “Transportation Analysis” and a “Traffic Impact Study” are 800 vpd. The “Transportation Analysis” should be eliminated and the TIS shall be completed as a part of the planning process not during the site development process. There isn’t enough rigor to the proposed analysis in the “Transportation Analysis” to identify the true impact and the infrastructure improvements needed to be included in the site development process. Waiting until the site development process weakens the county ability to control the project. Particularly since the volume threshold is the same for each. Traffic impact analysis shall be included at rezoning and updated at each step of the process. Particuilarly as the proposed development morphs at each stage.	The Transporation Analysis is for rezones only and the Traffic Impact Study is for site development. These studies are similar, but Transporation Analysis deliberatelty includes conceptual mitigation and less intense analysis, since much is unknown at rezone (site access(es), number of units proposed, size of commercial building, etc.). A site will first submit a TA when they rezone and then submit a more rigorous TIS when they go through site development, when proposed uses and intensities are solidified. For example, many mixed-use commercial PUDs have minimum square footages that increase between rezone and SDP.
The “Trip Generation Summary Tables” should be numbered. They should also include Saturday and Sunday as many land uses peak on the weekend.	Summary tables have already been revised to include numbering. Tables can be adjusted by applicant to include weekend if staff determines during pre-app that weekend counts must be collected.

If the Trip Generation Manual doesn't include the subject land use, there shall be at least 3 similar sites studied as required in the manual. The specific requirements for this in the Trip Generation Manual should be cited. You should specify the data to be collected. There shall also be a succinct description of each site as well as identification of who collected the data and when. It is currently suggested that the sites' capacity be used if no similar sites exist. Then who and how will the sites capacity be determined and documented? The number of parking spaces is not a good independent variable. I strongly suggest that this not be allowed. I see it as a loophole that will be abused. How will the county react if the trip generation is based upon the number of parking spaces and once the project is completed the traffic demand is significantly greater.	We must provide an avenue towards a solution when ITE does not provide an appropriate code for unique land use cases. Solutions are reasonable and align as closely with the ITE Trip Gen Manual as possible. It is unrealistic to anticipate a loophole when language is clear that the county will require similar site data collection and only state we "may" consider capacity in the rare circumstances this would apply.
The use of the Level of Service (LOS) is rather crude indicator of traffic operations. The origins of LOS was as a public relations tool not for quantitative analysis. The Volume Capacity Ratio (V/C) is more illustrative of the actual impacts. Consider a facility that operates at a V/C of 0.89 which would map to LOS D yet is just below LOS E. Would that be acceptable? How many hours during the day will the facility operate in the V/C regime? If it is 15 minutes it may be acceptable but 4 hours would clearly not be	LOS provides a great enough indication of traffic operations in Jefferson County. For unique circumstances, language has already been added stating staff reserves the right to request additional Measures of Effectiveness as identified in CDOT's Traffic Analysis and Forecasting Guidelines. The TMP highlights the County's project V/C ratio, not considering left turn lanes, and highlights the vast majority of roadways are well below capacity into the future. Pinch points are at intersections and why we generally feel comfortable with LOS with the right to reserve V/C or other analyses in specific circumstances.

	A Traffic Impact Study shall include analysis using the DRCOG models. A simple HCM analysis won't tell the full regional impact of such a large development. For example, large developments with major traffic destinations in the Denver metro area have a significant impact on the overall transportation network.	"Background traffic growth estimates should be based on the most recent regional Travel Demand Model available" is currently stated in the Transportation Impact Studies portion of the Transportation Studies section. DRCOG is generally the most recent regional model available, but the current model misrepresents existing and projected growth on certain corridors and CDOT's OTIS projections are therefore accepted in some circumstances.
	Evacuation Study. An Evacuation Study shall be included. The recent fires such as the Marshall and the Paradise Fires clearly indicate that evacuation is a major problem. It shall clearly delineate the tributary areas being evacuated and the capacity of each of the evacuation routes. In the mountains and rural areas of the county it should include large vehicles, vehicles evacuating livestock and other large animals as well as recreational vehicles.	Yes this will be a part of the Wildfire code updates that are ongoing and will be part of a separate regulation update.
	Appendices. This is a good start. However making them a bit more detailed and prescriptive will make staff review more consistent and productive.	Staff will continue to review and update as necessary
	Templates This is a good start. The tables could be expanded to include week days and weekends.	LOS tables require LOS for full intersection and each movement; it has not been seen that this language is resulting in challenging reviews. Synchro reports (or similar), as required, is acceptable for staff review.

MERRICK®

March 3, 2025
Merrick Reference No: 118429.25

Lindsey Wire
Jefferson County
lwire@co.jefferson.co.us

RE: Jefferson County Referral – Regulation Amendment - Case #: 22-122945AM

Dear Ms. Wire,

We appreciate the opportunity to review the above-mentioned document on behalf of the Bear Creek Water & Sanitation District (District) and have the following comment:

1. The District has no comments for the proposed regulation amendments and the proposed changes to the Transportation Design and Construction Manual.

Please call if you have any questions or need additional information.

Sincerely,
MERRICK & COMPANY

Dillon C. Rodenbaugh, P.E.
BCWSD Design Engineer

Reviewed & Approved,

Wade B. Wheatlake, P.E.
BCWSD District Engineer

cc: Ms. Jan Walker, BCWSD District Manager
Mr. Andy George, BCWSD Assistant Manager

Employee Owned
8051 E Maplewood Ave
Greenwood Village, CO 80111
Tel: +1 303-751-0741
hello@merrick.com
www.merrick.com

Lindsey Wire

From:	AUTOMAILER@JEFFCO.US
Sent:	Wednesday, March 5, 2025 4:20 PM
To:	Lindsey Wire
Cc:	Troy Jones
Subject:	22 122945 AM - Agency Response
Follow Up Flag:	Follow up
Flag Status:	Flagged

Case Number: 22 122945 AM
Case Type: Regulation Amendment
Case Name: Transportation and Construction Manual
Review: Building Division
Results: No Comment (no further review)
Review Comments:
Scheduled End Date: 21-FEB-25
Reviewer: Troy Jones
Description: Regulations Amendment to the Transportation and Construction Manual

Lindsey Wire

From: bradley.sheehan@state.co.us
Sent: Thursday, February 20, 2025 11:07 AM
To: Lindsey Wire
Subject: --{EXTERNAL}-- Re: 22-122945AM - Jefferson County Regulation Amendment Notification

Follow Up Flag: Follow up
Flag Status: Completed

This Message Is From an External Sender
This message came from outside your organization.

Report Suspicious

Thank you, we have no comments or concerns.

On Fri, Feb 14, 2025 at 8:30 AM 'Lindsey Wire' via CDOT_R1_AccessPermitting_GroupE <cdot_r1access_groupe@state.co.us> wrote:

Dear Agency/Interested Party,

Jefferson County Planning & Zoning is proposing a Regulation Amendment process pertaining to the Transportation Design and Construction Manual, Zoning Resolution Sections 2 and 16, Land Development Regulation Section 15 and the Storm Drainage Design and Technical Criteria. **A summary of changes can be found attached to this email.**

3rd Referral Red-marked drafts can be found in both Word and Adobe PDF formats on our Regulation Revision website and in the case folder (22-122945AM) here.

We are very interested in any comments or concerns that you or your agency may have with these proposed changes. If you have any questions, please contact Planning and Zoning Regulation Revisions at PZRegRev@jeffco.us.

Comments are due Friday, March 7th, 2025.

Thank you,

Lindsey Wire (she/her)

Engineering Supervisor

Planning & Zoning

o 303-271-8717

lwire@jeffco.us | planning.jeffco.us

JEFFERSON COUNTY COLORADO
Planning and Zoning

Help us shape the future of Jefferson County by visiting the Together Jeffco website!
https://togetherjeffco.com

--
You received this message because you are subscribed to the Google Groups "CDOT_R1_AccessPermitting_GroupE" group.
To unsubscribe from this group and stop receiving emails from it, send an email to cdot_r1access_groupe+unsubscribe@state.co.us.
To view this discussion visit https://groups.google.com/a/state.co.us/d/msgid/cdot_r1access_groupe/SA1PR09MB983949FAE4E7EDEAC6E6FF56DDFE2%40SA1PR09MB9839.namprd09.prod.outlook.com.
For more options, visit https://groups.google.com/a/state.co.us/d/optout.

--

www.codot.gov [codot.gov] www.cotrip.org [cotrip.org]

Please note that CDOT Region 1 Permits is now at 2829 W. Howard Pl., Denver, CO 80204, 2nd floor

Brad Sheehan P.E.
Colorado Department of Transportation
Access Engineer Region 1
2829 W. Howard Pl.,
Denver, CO 80204
2nd floor
720-284-8249

Lindsey Wire

From: Brooks Kaufman <BKaufman@core.coop>
Sent: Friday, March 7, 2025 7:57 AM
To: Lindsey Wire
Subject: --{EXTERNAL}-- RE: 22-122945AM - Jefferson County Regulation Amendment Notification

Follow Up Flag: Follow up
Flag Status: Flagged

This Message Is From an External Sender
This message came from outside your organization.

Report Suspicious

Good morning Lindsey

CORE Electric Cooperative has no comments.

Respectfully

Brooks Kaufman
Lands and Rights of Way Manager

800.332.9540 MAIN
720.733.5493 DIRECT
303.912.0765 MOBILE

www. [core.coop]**core [core.coop]**.coop [core.coop].

CORE ELECTRIC COOPERATIVE

The Energy to Thrive™ [core.coop]

[core.coop][twitter.com][facebook.com][instagram.com][linkedin.com]

[outlook-sdf.office.com] Book time to meet with me [outlook-sdf.office.com]

From: Lindsey Wire <lwire@co.jefferson.co.us>
Sent: Friday, February 14, 2025 8:40 AM
To: PZ-Regulation-Revisions <PZRegRev@co.jefferson.co.us>
Subject: 22-122945AM - Jefferson County Regulation Amendment Notification

[CAUTION:] This email is from an external source. Avoid clicking links or opening attachments unless you trust the sender and verify the content's safety.

Dear Agency/Interested Party,

Jefferson County Planning & Zoning is proposing a Regulation Amendment process pertaining to the Transportation Design and Construction Manual, Zoning Resolution Sections 2 and 16, Land Development Regulation Section 15 and the Storm Drainage Design and Technical Criteria. **A summary of changes can be found attached to this email.**

3rd Referral Red-marked drafts can be found in both Word and Adobe PDF formats on our Regulation Revision website and in the case folder (22-122945AM) here [jeffcogov.sharepoint.com].

We are very interested in any comments or concerns that you or your agency may have with these proposed changes. If you have any questions, please contact Planning and Zoning Regulation Revisions at PZRegRev@jeffco.us.

Comments are due Friday, March 7th, 2025.

Thank you,

Lindsey Wire (she/her)
Engineering Supervisor
Planning & Zoning
o 303-271-8717
lwire@jeffco.us | planning.jeffco.us

JEFFERSON COUNTY COLORADO
Planning and Zoning

Help us shape the future of Jefferson County by visiting the Together Jeffco website!
https://togetherjeffco.com [togetherjeffco.com]

Project Name: Jefferson County Regulation Amendments - Sections 2, 15, and 16

Project Number: RE2025-030
Date Received: 02/14/2025

Jurisdiction: Jefferson County
Due Date: 03/07/2025

Addressing Comments:
No Comments

Engineering Comments:
No Comments

Planner Comments:
No Comments

Lindsey Wire

From: Wenli Dickinson <wenli.dickinson@state.co.us>
Sent: Tuesday, February 18, 2025 7:45 PM
To: PZ-Regulation-Revisions
Cc: Ioana Comaniciu - DNR
Subject: --{EXTERNAL}-- Re: 22-122945AM - Jefferson County Regulation Amendment Notification

Follow Up Flag: Follow up
Flag Status: Flagged

This Message Is From an External Sender
This message came from outside your organization.
Report Suspicious

Good evening,

DWR has reviewed the Proposed Revisions to the Transportation Design and Construction Manual (3rd Referral), Case Number: 22-122945AM. Since there do not appear to be any water supply issues associated with the proposed revisions, DWR does not have any comments.

Regards,

Wenli Dickinson, P.E.
Water Resource Engineer

wenli.dickinson@state.co.us | (303) 866-3581 x8206
1313 Sherman St, Suite 821, Denver, CO 80203 | dwr.colorado.gov

---------- Forwarded message ---------
From: **Lindsey Wire** <lwire@co.jefferson.co.us>
Date: Fri, Feb 14, 2025 at 8:30 AM
Subject: 22-122945AM - Jefferson County Regulation Amendment Notification
To: PZ-Regulation-Revisions <PZRegRev@co.jefferson.co.us>

Dear Agency/Interested Party,

Jefferson County Planning & Zoning is proposing a Regulation Amendment process pertaining to the Transportation Design and Construction Manual, Zoning Resolution Sections 2 and 16, Land Development Regulation Section 15 and the Storm Drainage Design and Technical Criteria. **A summary of changes can be found attached to this email.**

3rd Referral Red-marked drafts can be found in both Word and Adobe PDF formats on our Regulation Revision website and in the case folder (22-122945AM) here.

We are very interested in any comments or concerns that you or your agency may have with these proposed changes. If you have any questions, please contact Planning and Zoning Regulation Revisions at PZRegRev@jeffco.us.

Comments are due Friday, March 7th, 2025.

Thank you,

Lindsey Wire (she/her)

Engineering Supervisor

Planning & Zoning

o 303-271-8717

lwire@jeffco.us | planning.jeffco.us

JEFFERSON COUNTY COLORADO
Planning and Zoning

Help us shape the future of Jefferson County by visiting the Together Jeffco website!
https://togetherjeffco.com

Evergreen Fire/Rescue

1802 Bergen Parkway • Evergreen, Colorado 80439
Phone: 303-674-3145 • Fax: 303-674-8701

February 28, 2025

Lindsey Wire, Engineering Supervisor
Jefferson County Planning & Zoning
100 Jefferson County Parkway
Golden, CO 80401

Re: Case# 22-122945AM Regulation updates-3rd referral

Ms. Wire:

The fire district has reviewed the 3rd referral drafts of the Transportation Design and Construction Manual, Zoning Resolution Sections 2 and 16, Land Development Regulation Section 15 and the Storm Drainage Design and Technical Criteria. The District has the following comments regarding the current drafts of these documents.

1. Transportation Design and Construction Manual
The fire district has no additional edits or additions to section 3.7.8 and supports the redlines for approval as written.

2. Land Development Regulation Section 15
The fire district has no comments for the updates to this document and supports the redlines for approval as written.

3. Zoning Resolution Sections 2 and 16
The fire district has no comments for the updates to this document and supports the redlines for approval as written.

4. Storm Drainage Design and Technical Criteria
The fire district concurs with removal of fire district approval for alternate overtopping depth and supports the redlines for approval as written.

Please contact me at (303) 679-4746 or via e-mail at kferry@evergreenfirerescue.com if you should have any questions or need further information.

Sincerely,

Kevin Ferry
Fire Marshal

Lindsey Wire

From:	AUTOMAILER@JEFFCO.US
Sent:	Monday, February 24, 2025 5:36 PM
To:	Lindsey Wire
Cc:	Pat OConnell
Subject:	22 122945 AM - Agency Response
Follow Up Flag:	Follow up
Flag Status:	Flagged

Case Number: 22 122945 AM
Case Type: Regulation Amendment
Case Name: Transportation and Construction Manual
Review: County Geologist
Results: Comments Sent (no further review)
Review Comments: Text & detail for edge drains has been revised. No additional comments for this AM
Scheduled End Date: 21-FEB-25
Reviewer: Pat O Connell
Description: Regulations Amendment to the Transportation and Construction Manual

Lindsey Wire

From: Brian Yowell <briany@kcranch.org>
Sent: Friday, February 14, 2025 9:01 AM
To: Lindsey Wire
Cc: Brian Yowell
Subject: --{EXTERNAL}-- Re: 22-122945AM - Jefferson County Regulation Amendment Notification

Follow Up Flag: Follow up
Flag Status: Flagged

This Message Is From an External Sender
This message came from outside your organization.
Report Suspicious

Lindsey,

Good morning. The new Library is located in Ken-Caryl Ranch (as you know) and so our Architectural Committee will be need to be involved in any exterior changes - which I know this is not so much that specifically.

Ken-Caryl Ranch is working on new street signs for the entire business park and has an agreement with Jefferson County for them to be branded with the KC logo and be brown and white vs. standard green/white.

Would love to work with you all during this project to incorporate the KC branded/colored signs.

Please let me know how we can work together and what you need from me.

Thank you!
Brian

KEN-CARYL R
MASTER ASS

Brian Yowell
Executive Director
Ken-Caryl Ranch Master Association
7676 S. Continental Divide Road
Littleton, CO 80127
303-979-1876, ext. 113
303-979-7524 Direct
briany@kcranch.org
www.ken-carylranch.org [ken-carylranch.org]
Let's Get Social! Follow us on: **Facebook [facebook.com]** I **Instagram [instagram.com]** [instagram.com]I **Twitter [twitter.com]**

CONFIDENTIAL: This email and any files transmitted with it are confidential and intended solely for the use of the individual or entity to whom they are addressed. If you have received this email in error, please notify the system manager. This message contains confidential information and is intended only for the individual named. It is strictly forbidden to share any part of this message with any third party, without written consent of the sender. If you are not the named addressee you should not disseminate, distribute, or copy this email. Please notify the sender immediately by email if you have received this email by mistake and delete this email from your system. If you are not the intended recipient you are notified that disclosing, copying, distributing, or taking any action in reliance on the contents of this information is strictly prohibited.

From: Lindsey Wire <lwire@co.jefferson.co.us>
Sent: Friday, February 14, 2025 8:30 AM
To: PZ-Regulation-Revisions <PZRegRev@co.jefferson.co.us>
Subject: 22-122945AM - Jefferson County Regulation Amendment Notification

Some people who received this message don't often get email from lwire@co.jefferson.co.us. Learn why this is important [aka.ms]

Dear Agency/Interested Party,

Jefferson County Planning & Zoning is proposing a Regulation Amendment process pertaining to the Transportation Design and Construction Manual, Zoning Resolution Sections 2 and 16, Land Development Regulation Section 15 and the Storm Drainage Design and Technical Criteria. **A summary of changes can be found attached to this email.**

3rd Referral Red-marked drafts can be found in both Word and Adobe PDF formats on our Regulation Revision website and in the case folder (22-122945AM) here [jeffcogov.sharepoint.com].

We are very interested in any comments or concerns that you or your agency may have with these proposed changes. If you have any questions, please contact Planning and Zoning Regulation Revisions at PZRegRev@jeffco.us.

Comments are due Friday, March 7th, 2025.

Thank you,

Lindsey Wire (she/her)
Engineering Supervisor
Planning & Zoning
o 303-271-8717
lwire@jeffco.us | planning.jeffco.us

JEFFERSON COUNTY COLORADO
Planning and Zoning

Help us shape the future of Jefferson County by visiting the Together Jeffco website!
https://togetherjeffco.com [togetherjeffco.com]

Lindsey Wire

From:	AUTOMAILER@JEFFCO.US
Sent:	Tuesday, February 25, 2025 12:48 PM
To:	Lindsey Wire
Cc:	Nathan Seymour
Subject:	22 122945 AM - Agency Response
Follow Up Flag:	Follow up
Flag Status:	Flagged

Case Number: 22 122945 AM
Case Type: Regulation Amendment
Case Name: Transportation and Construction Manual
Review: Engineer (Development Review)
Results: Complete
Review Comments:
Scheduled End Date: 21-FEB-25
Reviewer: Nathan Seymour
Description: Regulations Amendment to the Transportation and Construction Manual

Lindsey Wire

From: Sara Kohles
Sent: Thursday, March 6, 2025 6:18 PM
To: Lindsey Wire; PZ-Regulation-Revisions
Subject: Re: 22-122945AM - Jefferson County Regulation Amendment Notification

Follow Up Flag: Follow up
Flag Status: Completed

Hey Lindsey, I have a couple of questions/comments.

LDR Section 15
Have we considered a lower number of residential units allowed for a cul de sac? At least in the high hazard areas of the County. Allowing 30 SF or 100 MF can be significant along narrow roads in the mountain communities.

TDCM
How will we enforce the certification requirements for Transportation Info and Trip Gen Memo? Is it at the discretion of T&E? I realize we are not requiring an engineer's stamp but the proposed language is a bit vague.

Best,

Sara Kohles, AICP
Jefferson County Planning & Zoning
Planner III
P: 303-271-8734
skohles@jeffco.us

Help us shape the future of Jefferson County by visiting the Together Jeffco website!
https://togetherjeffco.com

We encourage scheduling an appointment to see staff during our office hours Monday - Thursday (CLOSED FRIDAYS). Please schedule appointments and submit applications online. Go to planning.jeffco.us for more information.

From: Lindsey Wire <lwire@co.jefferson.co.us>
Sent: Friday, February 14, 2025 8:39 AM
To: PZ-Regulation-Revisions <PZRegRev@co.jefferson.co.us>
Subject: 22-122945AM - Jefferson County Regulation Amendment Notification

Dear Agency/Interested Party,

Jefferson County Planning & Zoning is proposing a Regulation Amendment process pertaining to the Transportation Design and Construction Manual, Zoning Resolution Sections 2 and 16, Land Development Regulation Section 15 and the Storm Drainage Design and Technical Criteria. **A summary of changes can be found attached to this email.**

3rd Referral Red-marked drafts can be found in both Word and Adobe PDF formats on our Regulation Revision website and in the case folder (22-122945AM) here.

We are very interested in any comments or concerns that you or your agency may have with these proposed changes. If you have any questions, please contact Planning and Zoning Regulation Revisions at PZRegRev@jeffco.us.

Comments are due Friday, March 7th, 2025.

Thank you,

Lindsey Wire (she/her)
Engineering Supervisor
Planning & Zoning
o 303-271-8717
lwire@jeffco.us | planning.jeffco.us

JEFFERSON COUNTY COLORADO
Planning and Zoning

Help us shape the future of Jefferson County by visiting the Together Jeffco website!
https://togetherjeffco.com

JEFFERSON COUNTY COLORADO
Public Health

Public Health
303.232.6301 | jeffco.us

MEMO

TO: Lindsey Wire
Jefferson County Planning and Zoning Division

FROM: Tracy Volkman
Jefferson County Environmental Health Services Division

DATE: February 24, 2025

SUBJECT: Case #22-122945 AM
Transportation And Construction Manual
Jefferson County Planning & Zoning Divison

Jefferson County Public Health has reviewed the changes submitted for the third referral of this case and has no comments or suggestions for these proposed changes.

Lindsey Wire

From: Clayton Woodruff <Clayton.Woodruff@RTD-Denver.com>
Sent: Tuesday, March 4, 2025 10:52 AM
To: Lindsey Wire
Subject: --{EXTERNAL}-- RE: 22-122945AM - Jefferson County Regulation Amendment Notification

Follow Up Flag: Follow up
Flag Status: Flagged

This Message Is From an External Sender
This message came from outside your organization.

Report Suspicious

Lindsey,

The RTD Comments:

Department	Comments
Bus Operations	No exceptions
Bus Stop Program	No exceptions
Commuter Rail	No exceptions
Construction Management	No exceptions
Engineering	No exceptions
Light Rail	No exceptions
Real Property	No exceptions
Service Development	No exceptions
Transit Oriented Development	No exceptions
Utilities	No exceptions

This review is for Design concepts and to identify any necessary improvements to RTD stops and property affected by the design.

Thank you,

C. Scott Woodruff
Engineer III
Regional Transportation District
1560 Broadway, Suite 700, FAS-73 | Denver, CO 80202

o 303.299.2943 | m 303-720-2025
clayton.woodruff@rtd-denver.com

From: Lindsey Wire <lwire@co.jefferson.co.us>
Sent: Friday, February 14, 2025 8:31 AM
To: PZ-Regulation-Revisions <PZRegRev@co.jefferson.co.us>
Subject: 22-122945AM - Jefferson County Regulation Amendment Notification

Dear Agency/Interested Party,

Jefferson County Planning & Zoning is proposing a Regulation Amendment process pertaining to the Transportation Design and Construction Manual, Zoning Resolution Sections 2 and 16, Land Development Regulation Section 15 and the Storm Drainage Design and Technical Criteria. **A summary of changes can be found attached to this email.**

3rd Referral Red-marked drafts can be found in both Word and Adobe PDF formats on our Regulation Revision website and in the case folder (22-122945AM) here [jeffcogov.sharepoint.com].

We are very interested in any comments or concerns that you or your agency may have with these proposed changes. If you have any questions, please contact Planning and Zoning Regulation Revisions at PZRegRev@jeffco.us.

Comments are due Friday, March 7th, 2025.

Thank you,

Lindsey Wire (she/her)
Engineering Supervisor
Planning & Zoning
o 303-271-8717
lwire@jeffco.us | planning.jeffco.us

JEFFERSON COUNTY COLORADO
Planning and Zoning

Help us shape the future of Jefferson County by visiting the Together Jeffco website! https://togetherjeffco.com [togetherjeffco.com]

Lindsey Wire

From:	AUTOMAILER@JEFFCO.US
Sent:	Friday, March 7, 2025 9:27 AM
To:	Lindsey Wire
Cc:	Lindsay Townsend
Subject:	22 122945 AM - Agency Response
Follow Up Flag:	Follow up
Flag Status:	Flagged

Case Number: 22 122945 AM
Case Type: Regulation Amendment
Case Name: Transportation and Construction Manual
Review: Transportation and Engineering
Results: No Comment (no further review)
Review Comments: No further revisions.
Scheduled End Date: 21-FEB-25
Reviewer: Lindsay Townsend
Description: Regulations Amendment to the Transportation and Construction Manual

Lindsey Wire

From: JeanTate <jeantate@enviro-support.com>
Sent: Friday, February 14, 2025 9:09 AM
To: Lindsey Wire
Subject: --{EXTERNAL}-- RE: 22-122945AM - Jefferson County Regulation Amendment Notification

Follow Up Flag: Follow up
Flag Status: Flagged

This Message Is From an External Sender
This message came from outside your organization.

Report Suspicious

Lindsey,

While I have no comments on the proposed modifications, I did want to commend you for sending an informative email containing sufficient information. Most of the county emails I receive require multiple reloads to even find out what they are about. Your email was a welcome exception.

THANK YOU!

Jean Tate

Sent from my T-Mobile 5G Device

-------- Original message --------
From: Lindsey Wire <lwire@co.jefferson.co.us>
Date: 2/14/25 8:43 AM (GMT-07:00)
To: PZ-Regulation-Revisions <PZRegRev@co.jefferson.co.us>
Subject: 22-122945AM - Jefferson County Regulation Amendment Notification

Dear Agency/Interested Party,

Jefferson County Planning & Zoning is proposing a Regulation Amendment process pertaining to the Transportation Design and Construction Manual, Zoning Resolution Sections 2 and 16, Land Development Regulation Section 15 and the Storm Drainage Design and Technical Criteria. **A summary of changes can be found attached to this email.**

3rd Referral Red-marked drafts can be found in both Word and Adobe PDF formats on our Regulation Revision website and in the case folder (22-122945AM) here [jeffcogov.sharepoint.com].

We are very interested in any comments or concerns that you or your agency may have with these proposed changes. If you have any questions, please contact Planning and Zoning Regulation Revisions at PZRegRev@jeffco.us.

Comments are due Friday, March 7th, 2025.

Thank you,

Lindsey Wire (she/her)

Engineering Supervisor

Planning & Zoning

o 303-271-8717

lwire@jeffco.us | planning.jeffco.us

JEFFERSON COUNTY COLORADO
Planning and Zoning

Help us shape the future of Jefferson County by visiting the Together Jeffco website!
https://togetherjeffco.com [togetherjeffco.com]

Right of Way & Permits

1123 West 3rd Avenue
Denver, Colorado 80223
Telephone: 303.285.6612
violeta.ciocanu@xcelenergy.com

March 4, 2025

Jefferson County Planning and Zoning
100 Jefferson County Parkway, Suite 3550
Golden, CO 80419

Attn: Lindsey Wire

Re: Jefferson County Regulation Amendment Notification, Case # 22-122945AM

Public Service Company of Colorado's (PSCo) Right of Way & Permits Referral Desk has reviewed the plan for **Jefferson County Regulation Amendment Notification**. Please be aware PSCo owns and operates existing natural gas and electric *distribution* and *transmission* facilities within and throughout Jefferson County and has no objection to these proposals, contingent upon the following:

1. PSCo's ability to maintain all existing rights and this amendment should not hinder our ability for future expansion, including all present and any future accommodations for natural gas transmission and electric transmission related facilities, and that our current use/enjoyment of the area would continue to be an accepted use on the property and that it be "grandfathered" into these changes.

2. Please note that no structures are allowed within utility easements, and the widening of roadways in no way changes the standard required width of utility easements on private property.

3. Bear in mind that per the National Electric Safety Code, a minimum 10-foot radial clearance must be maintained at all times from all overhead electric facilities including, but not limited to, construction activities and permanent structures.

4. Note that proper clearances must be maintained including ground cover that should not be modified from original depths. Contact Colorado 811 before excavating. Use caution and hand dig when excavating within 18-inches of each side of the marked facilities. Please be aware that all risk and responsibility for this request are unilaterally that of the Applicant/Requestor.

Violeta Ciocanu (Chokanu)
Right of Way and Permits
Public Service Company of Colorado dba Xcel Energy
Office: 303-285-6612 – Email: violeta.ciocanu@xcelenergy.com

Lindsey Wire

From: PRO <coug@2lazycats.com>
Sent: Monday, May 5, 2025 6:30 PM
To: Lindsey Wire
Subject: --{EXTERNAL}-- RE: 22-122945AM - Jefferson County Regulation Amendment Notification
Attachments: Redline_TDCM_DRAFT_5-2-25-PRO.docx

Follow Up Flag: Follow up
Flag Status: Flagged

This Message Is From an External Sender
This message came from outside your organization.

Report Suspicious

Lindsey. Please accept my comments to this document. I am focusing only on the transportation portion of the document.

In General this is a considerable improvement from your beginning. However, many of my previous comments have not been addressed. Hopefully you will continue improving it. Given the speed at which transportation in particular is rapidly changing you should consider doing incremental in-house reviews how the regulations were applied and how well the documents submitted comport to the regulations.

My experience with traffic reports submitted to your group is that it was easy to subvert your and the public's intentions. If it isn't in writing no one will do it.

The development of these documents should be done by experienced traffic professionals even for small projects as these may be overlooked and misinterpreted. Particularly in the selection of an ITE land use code.

I think the outlines in the appendix are a very significant positive improvement. Looking from the Consultants' view it gives them guidance to scope the work and guide the client through the process!

Thanks for allowing me to review the document. I hope the whole process ends with a positive outlook for the future.

PRO

From: Lindsey Wire <lwire@co.jefferson.co.us>
Sent: Friday, February 14, 2025 8:39 AM
To: PZ-Regulation-Revisions <PZRegRev@co.jefferson.co.us>
Subject: 22-122945AM - Jefferson County Regulation Amendment Notification

Dear Agency/Interested Party,

Jefferson County Planning & Zoning is proposing a Regulation Amendment process pertaining to the Transportation Design and Construction Manual, Zoning Resolution Sections 2 and 16, Land Development Regulation Section 15 and the Storm Drainage Design and Technical Criteria. **A summary of changes can be found attached to this email.**

3rd Referral Red-marked drafts can be found in both Word and Adobe PDF formats on our Regulation Revision website and in the case folder (22-122945AM) here [jeffcogov.sharepoint.com].

We are very interested in any comments or concerns that you or your agency may have with these proposed changes. If you have any questions, please contact Planning and Zoning Regulation Revisions at PZRegRev@jeffco.us.

Comments are due Friday, March 7th, 2025.

Thank you,

Lindsey Wire (she/her)
Engineering Supervisor
Planning & Zoning
o 303-271-8717
lwire@jeffco.us | planning.jeffco.us

JEFFERSON COUNTY COLORADO
Planning and Zoning

Help us shape the future of Jefferson County by visiting the Together Jeffco website!
https://togetherjeffco.com [togetherjeffco.com]

Jefferson County Planning & Zoning
100 Jefferson County Parkway
Golden CO 80419
VIA EMAIL

May 2, 2025

To: Lindsey Wire, P.E., Planning & Zoning Engineering Supervisor

Cc: Chris O'Keefe, Director of Planning & Zoning.
From: Paul R. Olson, P.E., T.E. for the *Conifer & South Evergreen Community Committee*.
Subject: Review comments regarding the proposed updates to the Transportation Design and Construction Manual "Redline_TDCM_DRAFT_12112023 distributed December 11, 2023

GENERAL COMMENTS

As I read this document several significant changes in response to our June 2023 comments have been made, yet many have not yet been addressed.

As matter of professional engineering protocol the document writer should reply to the commentor indicating the disposition of every comment. To date the county has failed to respond to my comments to the two previous versions of this document.

As a general matter, the Transportation Design and Construction Manual (TDCM) defines engineering standards; therefore, it is appropriate that the TDCM is under the strict authorship control of the Jefferson County Director of Traffic & Engineering engineer NOT the Director of Planning & Zoning. There is actually very little in the document that provides guidance with respect to planning and/or zoning. Similar documents authored by other cities, counties, and state departments of transportation are the domain of the engineering staff within the agency.

This section should contain a description of why these specifications are here and what the county hopes to achieve. Should also include statements of how any submittal will be judged by staff.

The word "should" is used throughout the document. This is not an appropriate word to use in a regulatory document, as it is legally unenforceable. The correct words to use are Shall or Must.

The document should include discussion and presentation of the requirements for a "Clear Zone" where errant vehicles can safely recover without striking a hard

impediment. https://highways.dot.gov/safety/rwd/provide-safe-recovery/clear-zones/clear-zones This will impact design requirements for roadway construction and reconstruction. This is also included in the CDOT Roadway Design Guide, Chapter 7 section 7.1.1.1.2, 7.2.1.16 and Chapter 13, 13.5.5.1. It also has a significant presence in the AASHTO Roadside Design Guide and the FHWA/AASHTO Highway Safety Manual. This is particularly important for the safety of motorists traveling on Jefferson County rural roads.

In general, the Traffic Study portion of the document is greatly improved. It still needs work to clarify specific portions. My professional opinion is that it is headed in the right direction.

SPECIFIC COMMENTS

The following are our specific comments with respect to the **TDCM Design and Technical Criteria**:

- ***Section6.1.***
- *Traffic data volume collection shall always include weekday and weekend counts. The reports shall include an analysis of the impact at all these times.*
- *The study of future impacts shall take into account adjacent future developments and those proposed. Adjacent land shall be judged by allowable land use.*
- ***Section 6.2.1*** *Delete the last sentence. Any analysis using the HCM and/or Trip Generation Manual shall be done under the supervision of qualified and experienced transportation professional.*

All of the following items shall covered in a written document. This help making sure that the initial discussions and agreements are clear to all parties.

- *There are number of things that should be included in all four levels of analysis, Limits of the area to be analyzed*
    - *Identification of the main access routes to the site*
    - *I would only accept the "Letter of Conformance" if it covers all of the regulations currently in force. I have seen some really poor TIS documents submitted to the county and I would not accept them under this clause.*
    - *Add a section to clearly state the requirements for data collection. This would include the following:*
    - *Areas covered (project limits)*
    - *Timing of the counts,*

- *Count types,*
- *Origin and destination of potential development users,*
- *Count durations,*
- *Days when counts shall not be taken unless approved in writing by the County Traffic Engineer.*
- *Acceptable counting technology and accuracy levels.*
- *I should also include data (trip tables, O&Ds, growth rates at a minimum) from the DRCOG traffic models.*
- *Counts shall be continuous for the period specified, gaps in count data shall cause new counts to be taken.*

1. *A table summarizing the analysis for each level should also be considered. Traffic counts younger than 3 years may not be stale based upon the surrounding land use changes/developments.*
2. *The volume thresholds for both a "Transportation Analysis" and a "Traffic Impact Study" are 800 vpd. The "Transportation Analysis" should be eliminated and the TIS shall be completed as a part of the planning process not during the site development process. There isn't enough rigor to the proposed analysis in the "Transportation Analysis" to identify the true impact and the infrastructure improvements needed to be included in the site development process. Waiting until the site development process weakens the county ability to control the project. Particularly since the volume threshold is the same for each.*

Traffic impact analysis shall be included at rezoning and updated at each step of the process. Particuilarly as the proposed development morphs at each stage.

3. ***The "Trip Generation Summary Tables**" should be numbered. They should also include Saturday and Sunday as many land uses peak on the weekend.*
4. *If the Trip Generation Manual doesn't include the subject land use, there shall be at least 3 similar sites studied as required in the manual. The specific requirements for this in the Trip Generation Manual should be cited. You should specify the data to be collected. There shall also be a succinct description of each site as well as identification of who collected the data and when.*

   It is currently suggested that the sites' capacity be used if no similar sites exist. Then who and how will the sites capacity be determined and documented? The number of parking spaces is not a good independent variable. I strongly suggest that this not be allowed. I see it as a loophole that will be abused.
   How will the county react if the trip generation is based upon the number of parking spaces and once the project is completed the traffic demand is

significantly greater.

5. *The use of the Level of Service (LOS) is rather crude indicator of traffic operations.*
   The origins of LOS was as a public relations tool not for quantitative analysis.
   The Volume Capacity Ratio (V/C) is more illustrative of the actual impacts.

   Consider a facility that operates at a V/C of 0.89 which would map to LOS D yet is just below LOS E. Would that be acceptable? How many hours during the day will the facility operate in the V/C regime? If it is 15 minutes it may be acceptable but 4 hours would clearly not be.
6. *A Traffic Impact Study shall include analysis using the DRCOG models. A simple HCM analysis won't tell the full regional impact of such a large development. For example, large developments with major traffic destinations in the Denver metro area have a significant impact on the overall transportation network.*
7. ***Evacuation Study.*** *An Evacuation Study* ***shall*** *be included. The recent fires such as the Marshall and the Paradise Fires clearly indicate that evacuation is a major problem. It shall clearly delineate the tributary areas being evacuated and the capacity of each of the evacuation routes. In the mountains and rural areas of the county it should include large vehicles, vehicles evacuating livestock and other large animals as well as recreational vehicles.*
8. ***Appendices.*** *This is a good start. However making them a bit more detailed and prescriptive will make staff review more consistent and productive.*

9. ***Templates***

This is a good start. The tables could be expanded to include week days and weekends.

There should be a standard set of standard tables for presentation of collected traffic data.

CONCLUSION

The Committee is hopeful that the above recommendations will help improve the future health, safety, and welfare of both residents, visitors, and travelers in the unincorporated areas of Jefferson County.

Respectfully submitted,

Paul R. Olson, P.E., T.E.
25587 Conifer Road
STE 105-611

PREPARED PRESENTATION

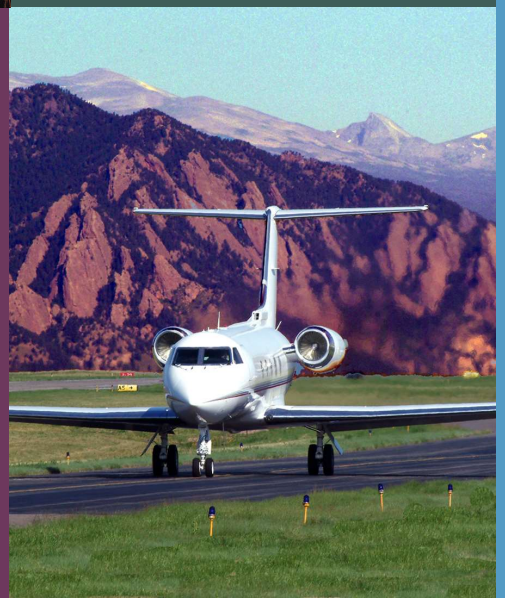

JEFFERSON
COUNTY COLORADO

22-122945AM Regulation Amendments

Transportation and Access Standards

June 10, 2025

Regualation Amendment Team

- Planning and Zoning
  - Lindsey Wire, Engineering Supervisor
  - Nathan Seymour, Civil Planning Engineer III
- Transportation and Engineering
  - Christina Lane, Transportation Operations & Planning Manager
- Fire Protection Districts
  - Rachel Rush, Elk Creek and Conifer Fire Protection Districts
  - John Sebastian, Evergreen Fire Rescue

Purpose

- To amend the following County Regulations:
  - Transportation Design and Construction Manual (TDCM)
  - Zoning Resolution (ZR)
  - Land Development Regulation (LDR)
  - Storm Drainage Design and Technical Criteria (SDD&TC)

Background

- The proposed revisions are necessary to provide clarity and align County requirements with industry standards.
- These proposed amendments are moving forward at this time as they have been in process for several years. If adopted, they will be carried forward and incorporated into the Unified Land Use Code, as appropriate.

Content

- TDCM Chapter 3: Design and Technical Criteria
  - Update Standard Templates for Streets/Roads
  - Align County requirements with the AASHTO Greenbook

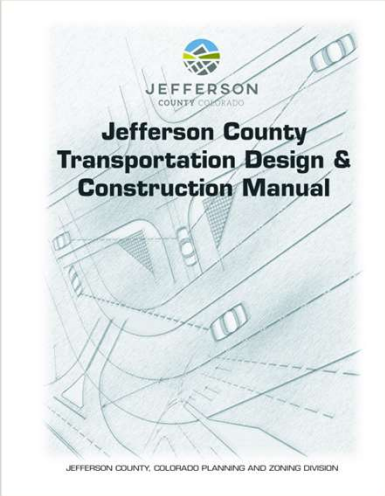

Content

- TDCM Chapter 3: Design and Technical Criteria
  - Update Section 3.7.1 to clarify intersection spacing requirements.
  - Update Section 3.7.2 to provide additional clarity on Vision Clearance Triangle and Site Distance requirements
  - Update Section 3.10 to add a reference to Colorado Department of Transportation criteria

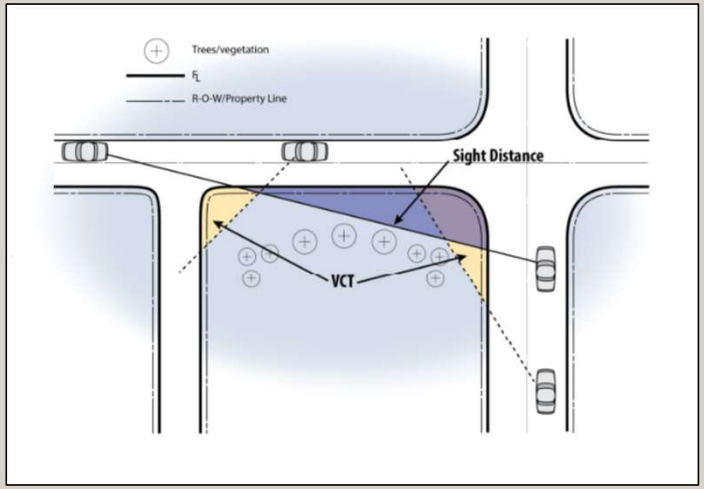

Content

- Update Section 3.7.8 to:
  - Remove the statement that the appropriate Fire Protection District may approve alternate standards.
  - Define a new process for requesting relief of the requirements within this section, which must be approved by the County.
  - Allow up to 15% grade for driveways and private roads provided specific requirements are met.
  - Define minimum distance from a structure from a hammerhead turnaround.
  - Define loading requirements for bridges and other structures.
  - Clarify that the rules and regulations of the applicable Fire Protection District shall govern unless less restrictive than County requirements.

Content

- TDCM Chapter 4: Pavement Design and Technical Criteria
  - Update Section 4.2 to clarify that edge drains are required with the Construction Plans for the Dipping Bedrock areas within the County, and may only be omitted if final pavement design shows they are not necessary.
  - Add Section 4.6.3.2 to specify when Stone Mastic Asphalt is required.

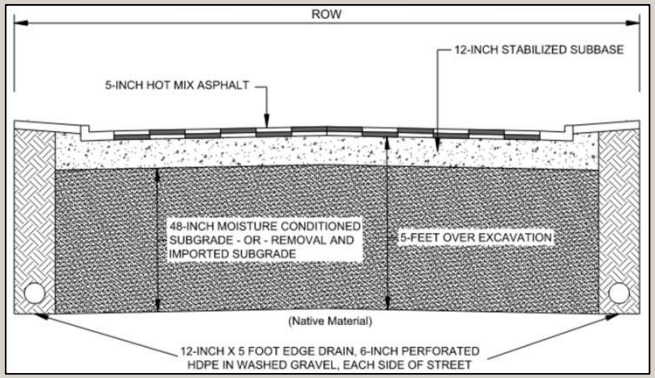

Content

- TDCM Chapter 5: Construction Specifications and Standards
  - Update Construction Specifications and Standards to meet industry standards.
  - Updates to text for:
    - Medians
    - Waterproofing Membranes
    - Storm Sewer Pipe
    - Signs
    - Pavements Markings

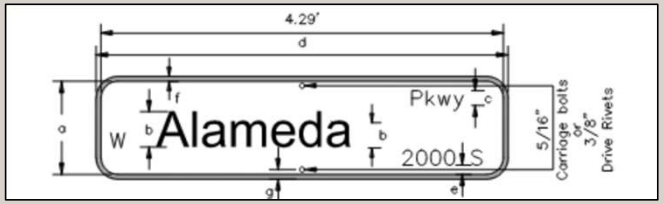

Content

- Transportation Studies Appendix
  - Relocate the text to Chapter 6 of the TDCM.
  - Create four types: Transportation Information, Trip Generation Memoranda, Transportation Analysis, Transportation Impact Study, and Letter of Conformance with an Approved TIS
  - For each type, provide an example template in the Appendix.

Content

- Transportation Studies
  1. Transportation Information: Any development less than 150 trips
  2. Trip Generation Memoranda (TGM): Any development between 150 and 800 trips
  3. Transportation Analysis (TA): Rezoning with greater than 800 trips
  4. Transportation Impact Study (TIS): Site Development Plan or Plat with greater than 800 trips
  5. Letter of Conformance with an Approved TIS: Site Development Plan within 3 years of regional development

Content

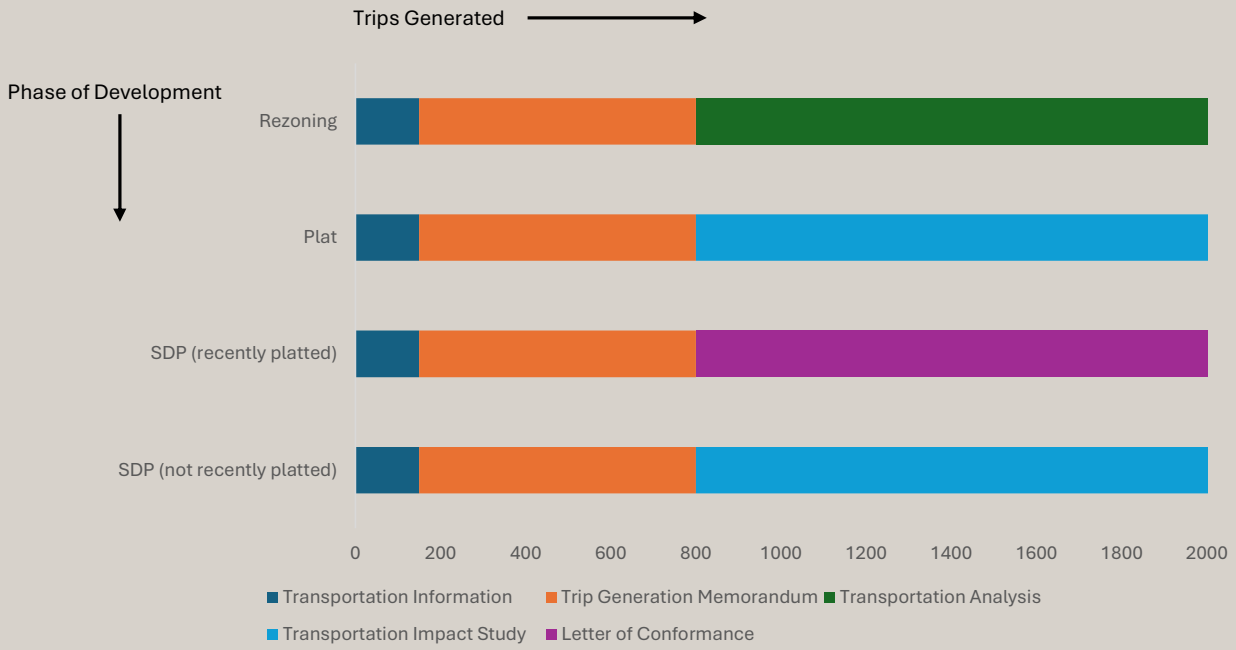
Trips Generated
Phase of Development
Rezoning
Plat
SDP (recently platted)
SDP (not recently platted)
0
200
400
600
800
1000
1200
1400
1600
1800
2000
Transportation Information
Trip Generation Memorandum
Transportation Analysis
Transportation Impact Study
Letter of Conformance

Content

- Definitions
  - Add a definition for All Weather Travel Surface
  - Add definition for Dip of Natural Terrain
  - Add definition for Sidewalk
  - Add definition for Vulnerable Roadway User

Content

- ZR Section 2: General Provisions and Regulations
  - Update Section 2.D.1.j.(4), to clarify how the physical standard of access will be evaluated for different Building Permit types (ie habitable vs non-habitable structures and additions)
  - Clarify that the Fire Protection District may still provide a letter for offsite streets/roads associated with an addition.

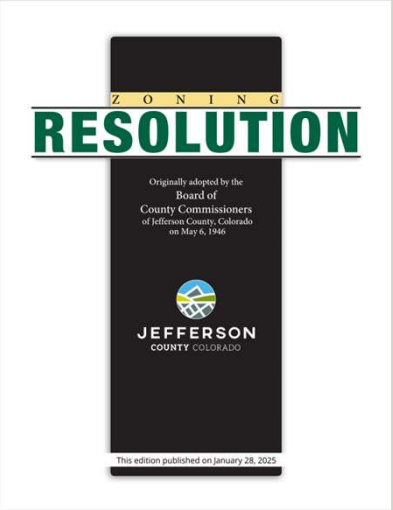

Content

- ZR Section 16: Land Disturbance
  - Clarify that land disturbance activities with or in advance of a building permit with less than 0.5 acres of land disturbance where the applicant is requesting relief of a regulatory requirement requires a Grading Permit.
  - Add the requirement that land disturbance associated with access to detached living space where either the access does not exist or has not previously been approved as access to living space requires a Notice of Intent Permit.
  - Update the Notice of Intent process to allow modifications to previously accepted plans when construction does not occur per the plans through an Administrative Review rather than a Grading Permit.

Content

- Land Development Regulation Section 15: Circulation
  - Clarify that adjoining street improvements are required for all Arterial Streets/Roads.
  - Remove the statement that the appropriate Fire Protection District may approve alternate standards for cul-de-sacs and clarify that any relief would be processed by Planning and Zoning.

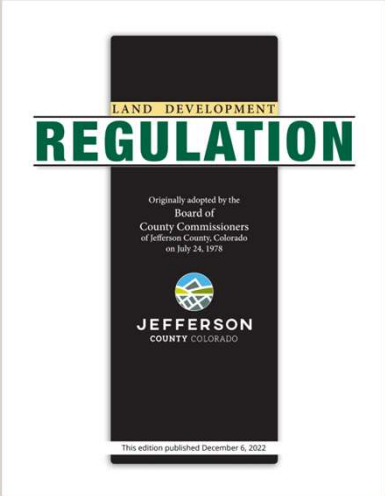

Content

- Storm Drainage Design and Technical Criteria (Chapter 10 Streets/Roads)
  - Remove the statement that the appropriate Fire Protection District may approve alternate standards for overtopping depth for the 100-year storm event that exceeds 12” and clarify that any relief would be processed by Planning and Zoning.

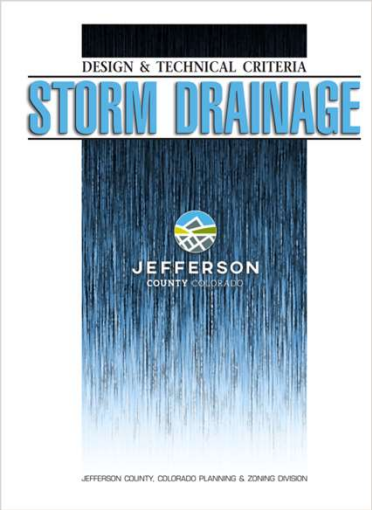

Recommendation

- Staff and the Planning Commission recommend approval of these amendments to provide clarity and align County requirements with industry standards.

JEFFERSON
COUNTY COLORADO

Thank you for your time!

Definitions

- All Weather Travel Surface: An all weather travel surface is defined as an improved surface that is designed to withstand all weather conditions for typical road use and able to support emergency vehicles. The surface is required to be constructed of concrete, asphalt, recycled asphalt or a minimum of 6-inches of class 6 road base.
- Dip of Natural Terrain: The dip of the natural terrain refers to the direction at which the existing ground surface slopes downward. The direction of the dip should be drawn perpendicular to the existing contour lines.
- Sidewalk: A portion of a street designated for pedestrians and other vulnerable roadway users, in accordance with state law.
- Vulnerable Roadway User: Roadway users that are not protected by a vehicle or other shield while on a roadway and is at a greater risk for involvement in a serious injury or fatal crash. Vulnerable roadway users include, but are not limited to, bicyclists, pedestrian, and equestrians; those using mobility devices such as wheelchairs; those using micromobility devices such as electric scooters; and other forms of rolling such as roller blades and skateboards.